21375 | 1



Available in English
In deutscher Sprache verfügbar
Disponibles en français
Disponibile in italiano
Disponible en español
提供中文版本

LEGO® Builder

LEGO.com/sustainable-packaging



FR
DONNEZ
OU
RECYCLEZ

ASSOCIATION OU MAGASIN OU DÉCHÈTERIE

Adresses sur quefairedemesdechets.fr



# BUILDER

Download on the App Store

GET IT ON Google Play

腾讯应用宝 安卓应用商店

Apple and the Apple logo are trademarks of Apple Inc., registered in the U.S. and other countries and regions. App Store is a service mark of Apple Inc.
Google Play and the Google Play logo are trademarks of Google LLC.
Tencent and the Tencent logo are trademarks of Tencent Inc.

**LEGO.com/devicecheck**

**LEGO® Builder**



*LEGO® Ideas Fan Designer Matthew Esposito with his original product idea*

# MEET THE FAN DESIGNER

LEGO® Ideas fan designer Matthew Esposito (LEGO Ideas name MattE720) lives in Smithtown, Long Island, USA. During the day he works as a shellfish farmer and town labourer. By night, however, he dreams of bigger and considerably less docile sea creatures.

*"I was always big into sustainability, and I majored in clean energy technology in college. With Godzilla being the 'protector of the natural order' and seeing a surge in popularity for him since 2014 onwards, I thought how cool it would be to have a large brick-built lizard daunting over people's brick collections or terrorising someone's LEGO village. I spent hours surfing the internet and watching Godzilla movies to find reference images that captured all the proper details needed to create him. I wanted the interior base of the model to be solid, using LEGO Technic beams and joints to attach the large limbs. I went through multiple different designs with the base to get it as strong as I could. But the final model feels like a love letter to all Godzilla and LEGO fans alike."*

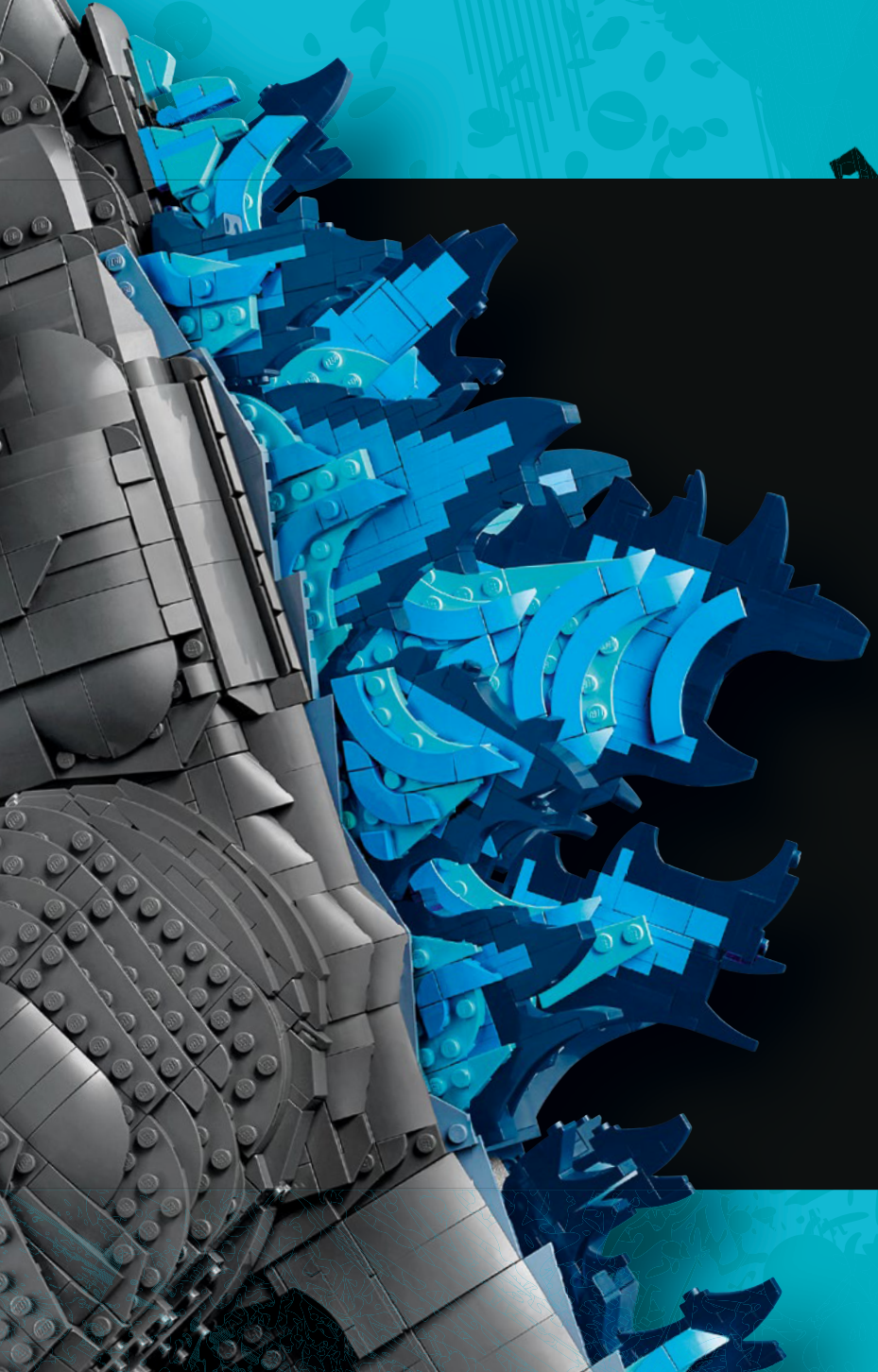

# KING OF THE MONSTERS

Godzilla is the ultimate force of nature, an ancient Titan from a world before our own. Towering above modern cityscapes, he inspires awe at an unprecedented scale and stands as a reminder of the raw power of the natural world.

Driven by an instinct older than humanity, Godzilla rises from the depths when the balance of the natural world is threatened. His actions are guided by a primal purpose to confront disruption and restore order on a global scale.

From the oceans he emerges, unleashing his devastating heat ray against anything that endangers the natural order. In a world where humanity must coexist with Titans, Godzilla stands as the ultimate expression of nature's power: unyielding, unstoppable, and essential to the planet's survival.



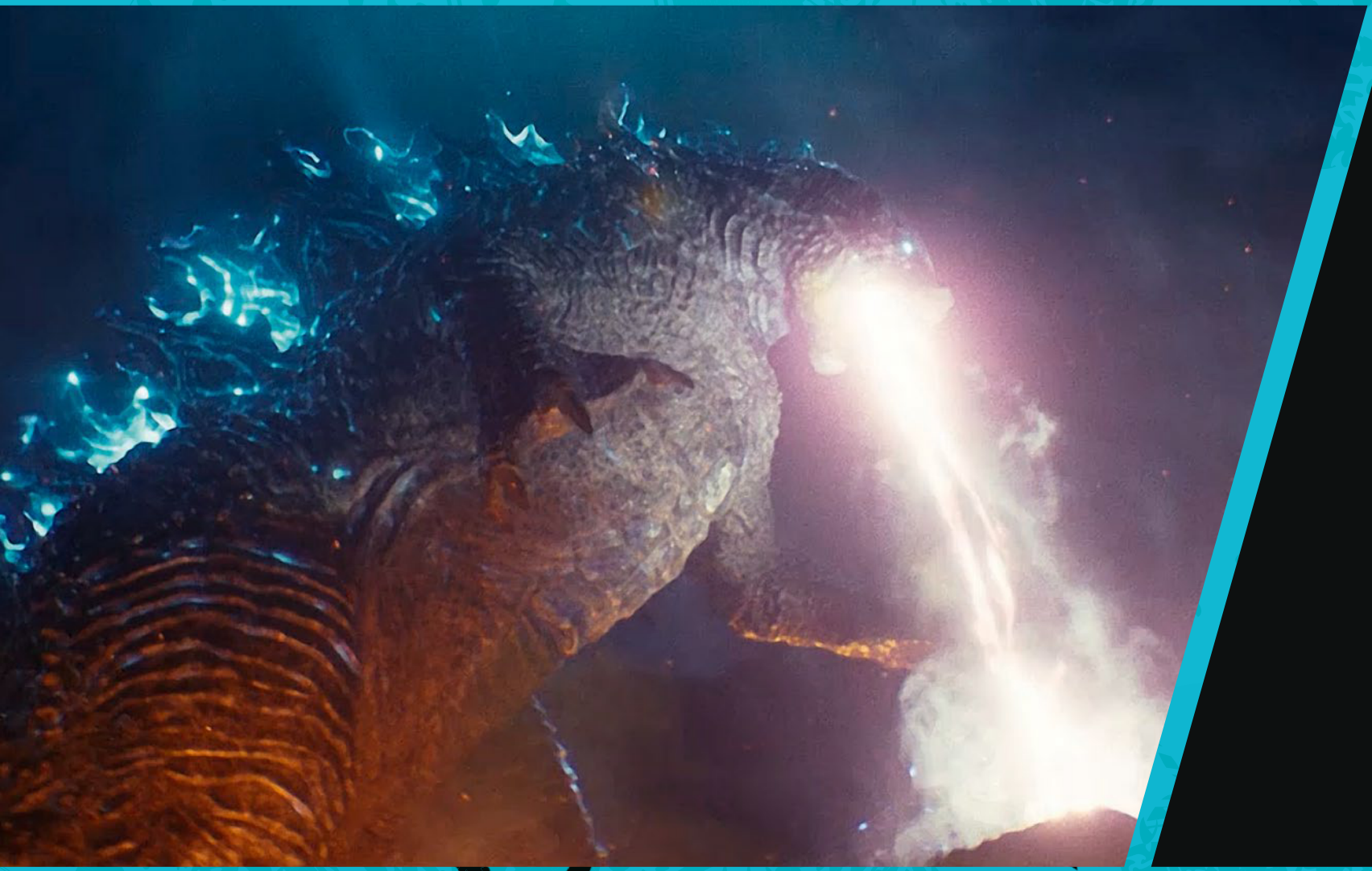

# CREATING A LEGEND

Godzilla is one of the most recognisable icons in cinematic history. First unleashed on the world seven decades ago, the towering Titan instantly captured the imagination of audiences everywhere. From the very first film, Godzilla has stood as a powerful symbol of spectacle and storytelling, evolving across generations as a global pop culture legend.

Across films, television, books and games, Godzilla's enduring presence has spanned continents and cultures, uniting fans through awe-inspiring scale and unforgettable moments, and leaving a legacy that continues to grow as one of the most enduring figures in entertainment.

Reintroduced for a new generation in Legendary's Monsterverse in 2014, Godzilla has been brought to life with bold, modern scale, redefining how audiences experience larger-than-life storytelling. As the cornerstone of this expanding universe, the iconic movie monster continues to thrill fans around the globe.



# THE MONSTERVERSE TIMELINE




When ancient parasitic creatures are awakened and threaten to devastate the modern world, humanity's only hope is Godzilla, an ancient alpha predator whose return could save the world... or destroy it.

*GODZILLA (2014)*

*(2017) KONG: SKULL ISLAND*

When a scientific expedition to an uncharted island awakens titanic forces of nature, a mission of discovery becomes an explosive war between man and monster in the untold story of how Kong became king.






As Monarch confronts a global uprising of ancient Titans, Godzilla must battle rival alpha predators for dominance while humanity fights to survive in a world reclaimed by monsters.

*GODZILLA: KING OF THE MONSTERS (2019)*




Across multiple generations, a fractured family uncovers the secrets of Monarch and their connection to the Titans, revealing humanity's fragile role in a world shaped by monsters.

*TV SERIES MONARCH: LEGACY OF MONSTERS (2023)*




The next chapter in the Monsterverse, coming in 2027.

*GODZILLA X KONG: SUPERNOVA (2027)*

*(2021) GODZILLA VS. KONG*

As a human conspiracy threatens to eradicate the Titans, Godzilla and Kong are driven into a colossal clash that will determine the balance of the natural order.




*(2024) GODZILLA X KONG: THE NEW EMPIRE*

When a hidden tyrannical force rises from the depths of the Hollow Earth, Godzilla and Kong must unite against a world-ending threat that challenges their dominance and humanity's place among Titans.







# FROM THE LEGO® IDEAS DESIGN TEAM

Matt's product idea is a true celebration of one of the most iconic monsters in movie history, resulting in a spectacular brick-built creature almost twice the size of Matt's initial model. However, turning Matt's brilliant idea into this Monsterverse giant came with its own challenges. To become a stable display model, it required a fixed pose and a strong tail to support it. We spent a month just working out the necessary angles for the tail, allowing the model to stand on the table. Like Matt, we aimed to replicate the iconic movie poster with Godzilla shooting a heat ray into the sky. Dozens of angled sections form a very organic-looking Godzilla. The spikes across his back (a masterclass of LEGO® maths) were built at a variety of angles, also adding colour to the model. It all comes together in modules, and to ease handling weight and volume, the model separates above the hips. Finally, as a humble tribute, we added a tiny brick-built Matt inside Godzilla's head. After all, he's what sparked this massive model.

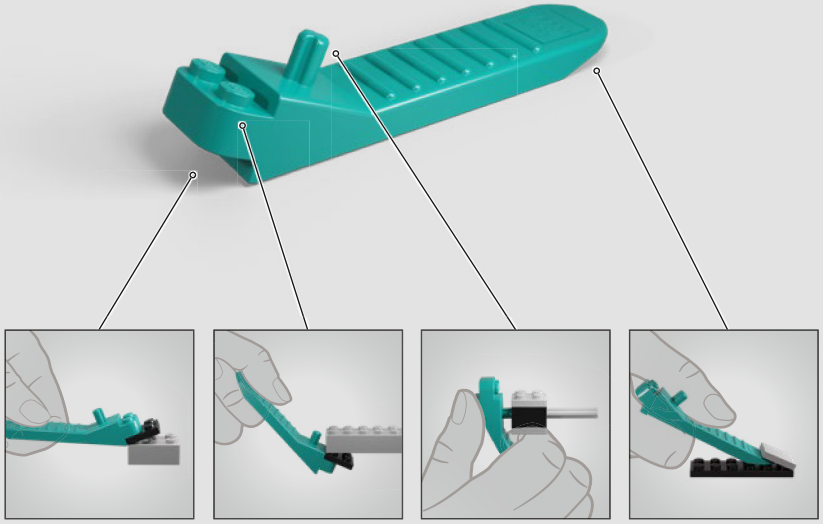


1

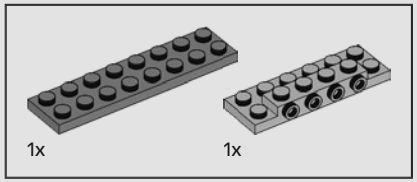


1

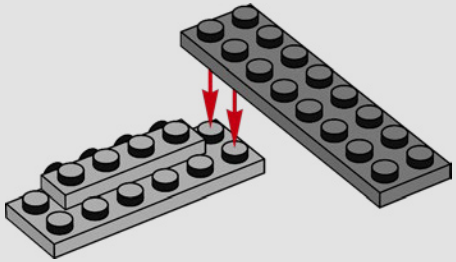

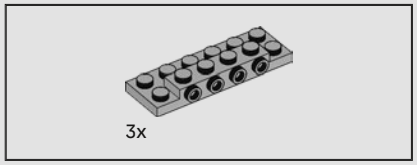


2

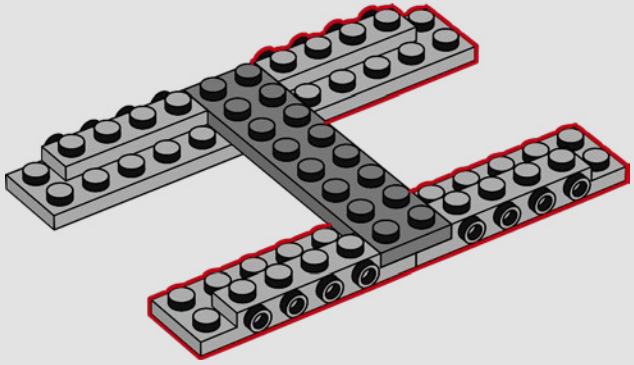

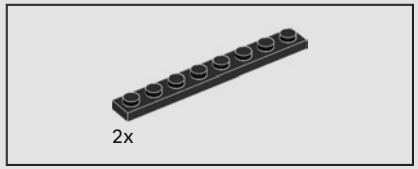


3

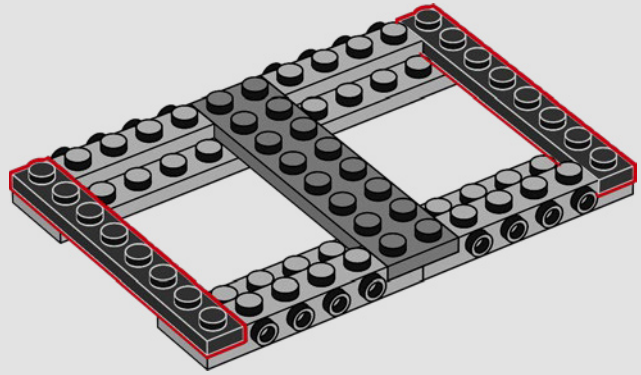

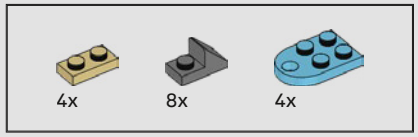


4

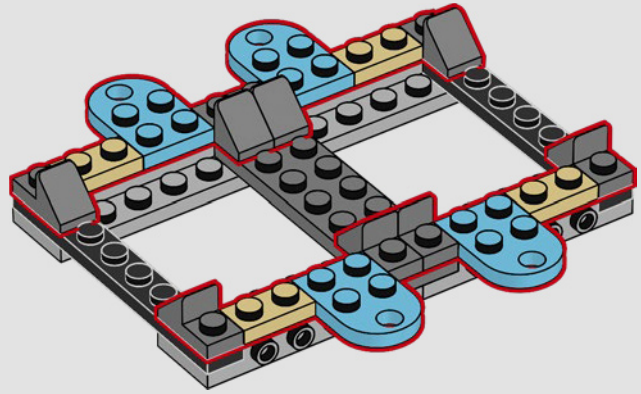

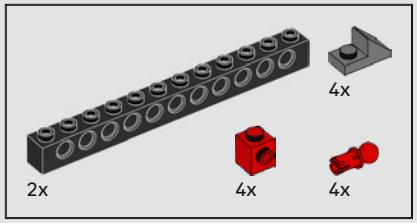


5

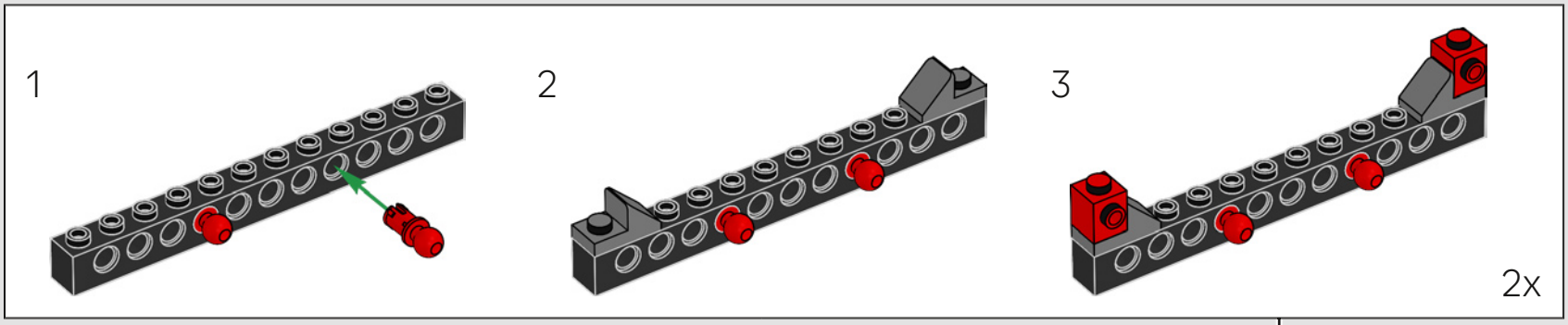


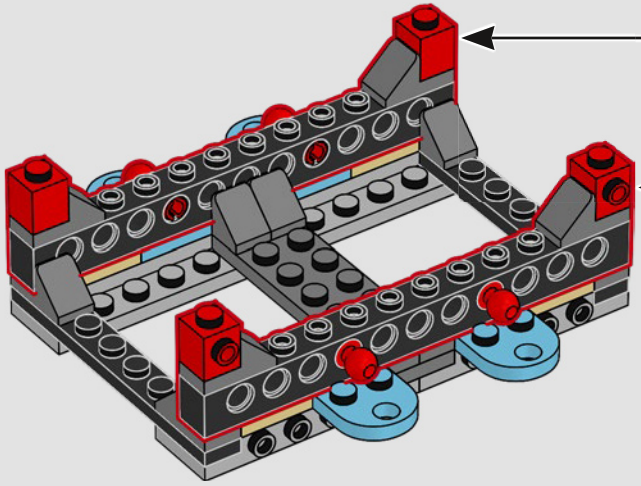

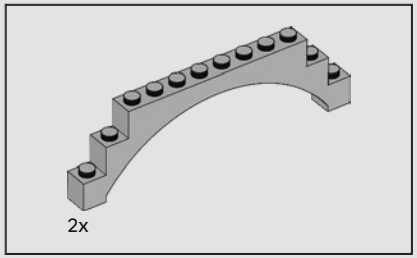


6

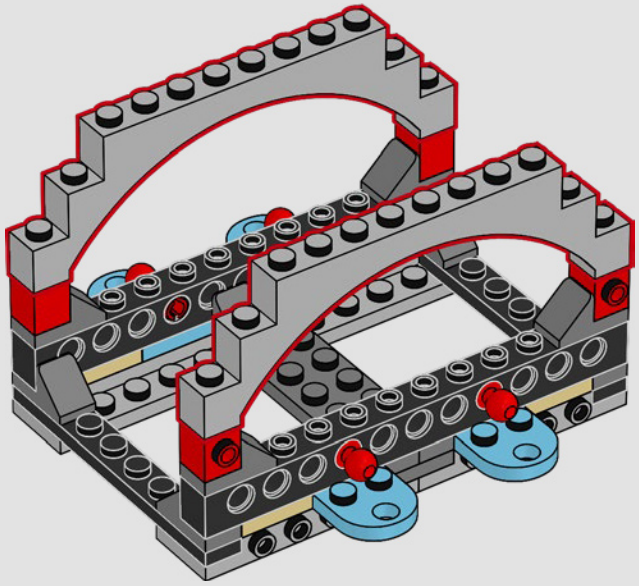

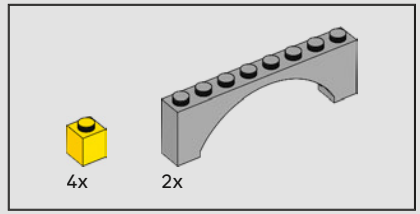


7

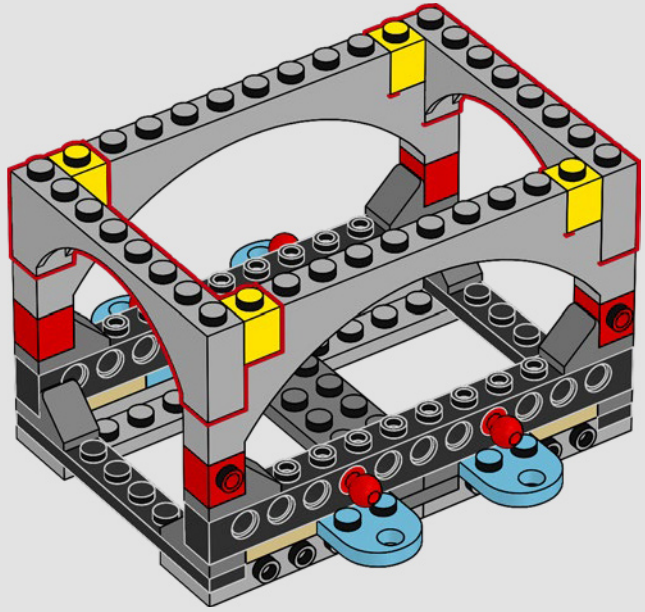

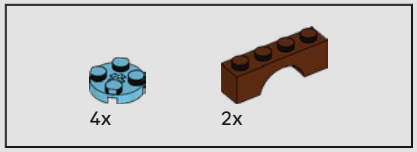


8

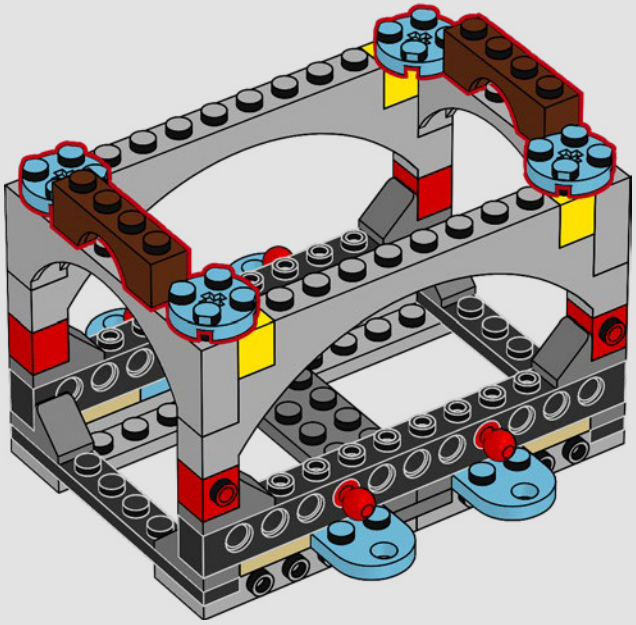

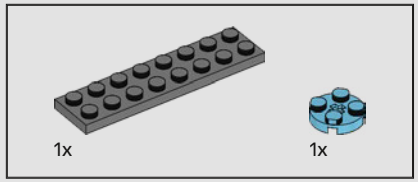


9

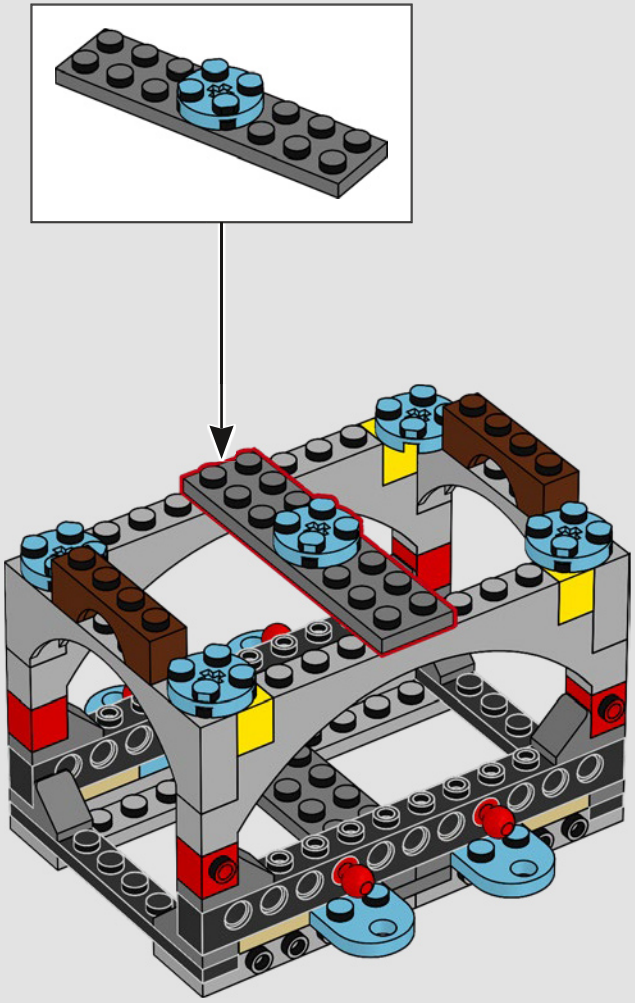

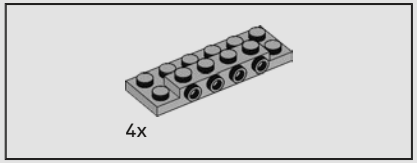


10

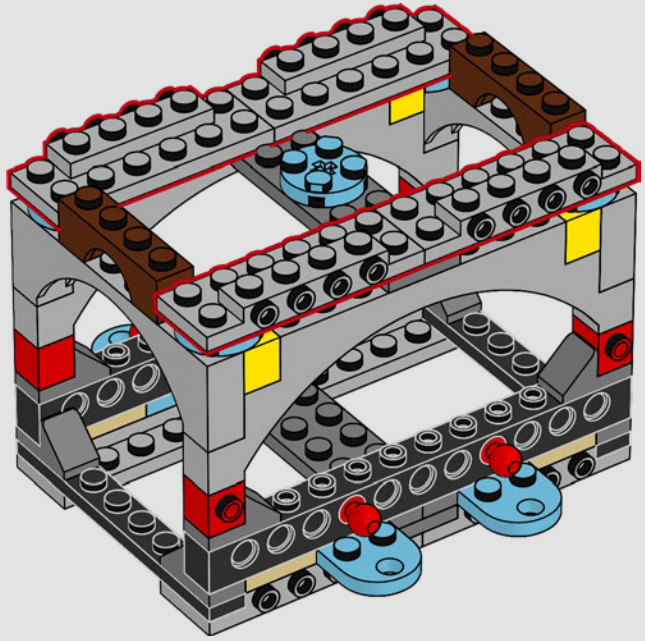

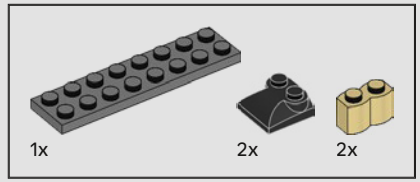


11

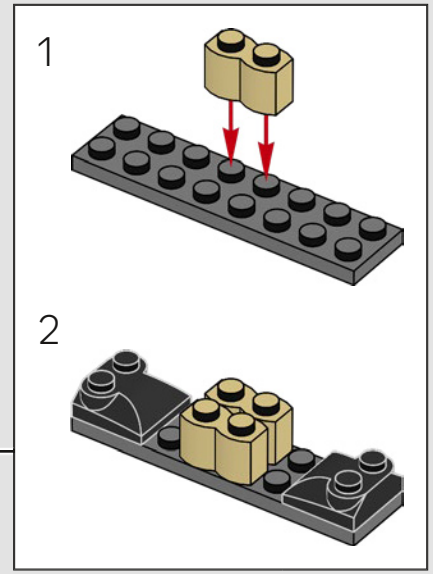


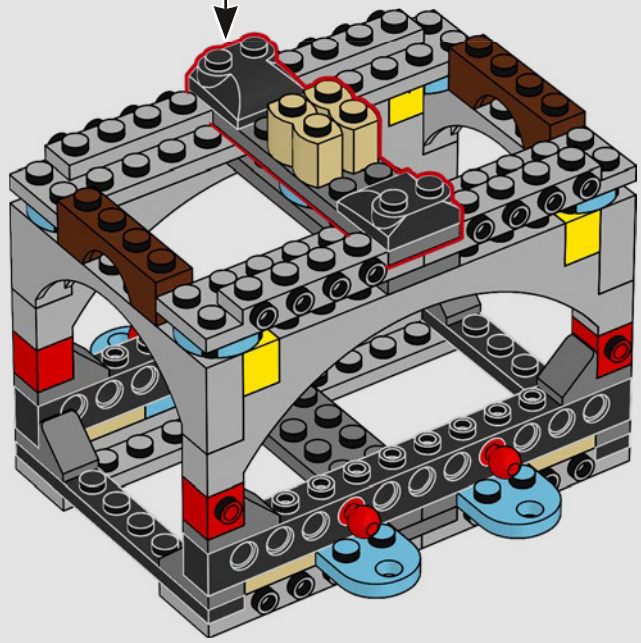

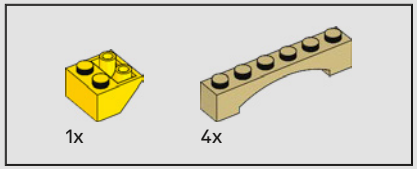


12

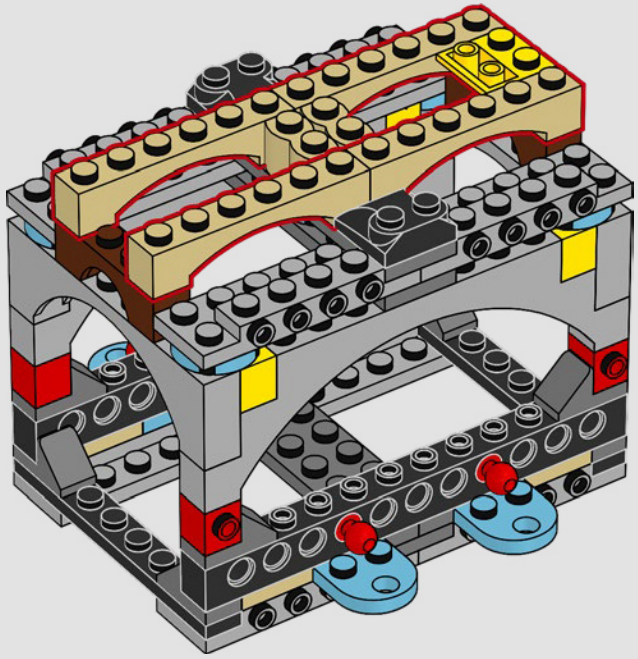

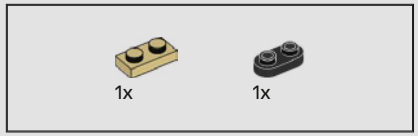


13

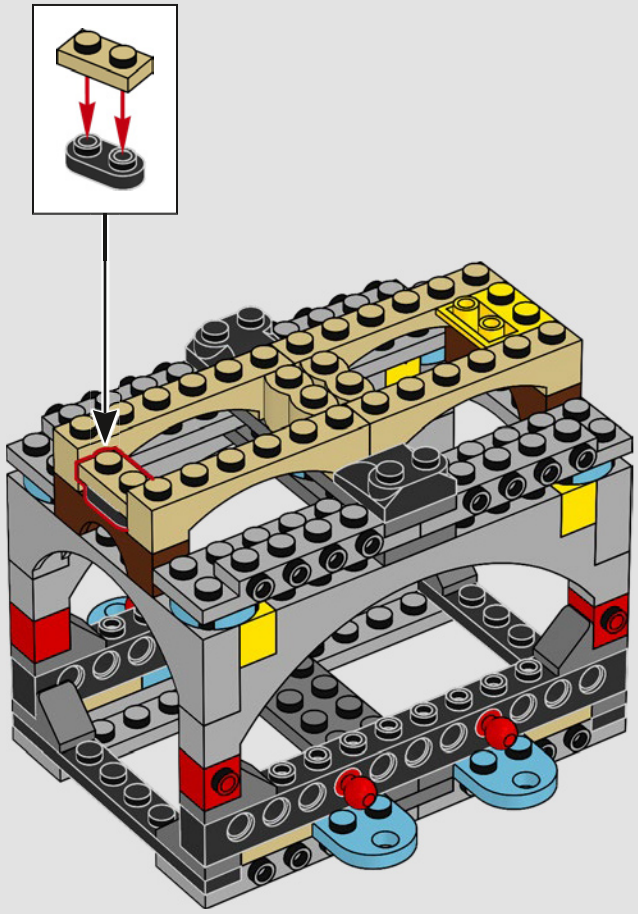

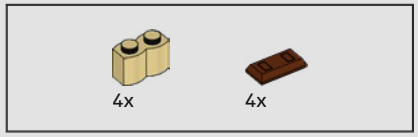


14

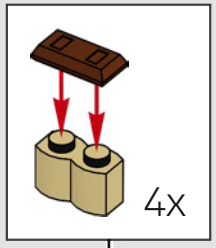


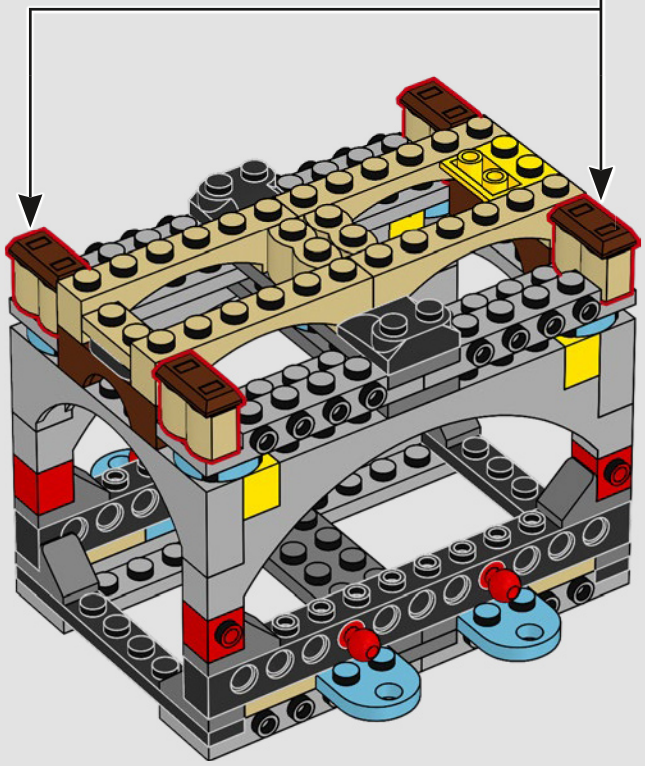

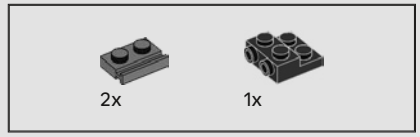


15

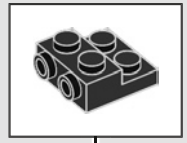

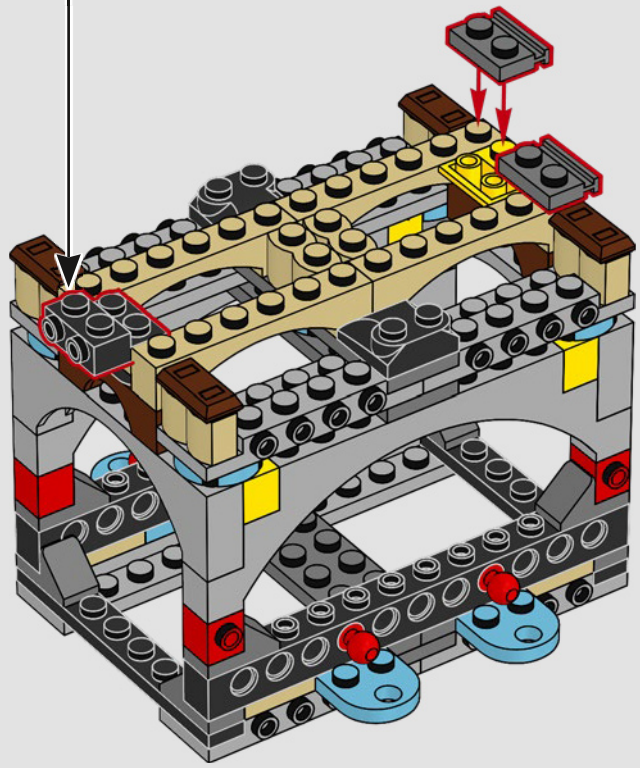

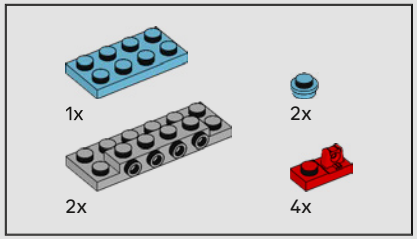


16

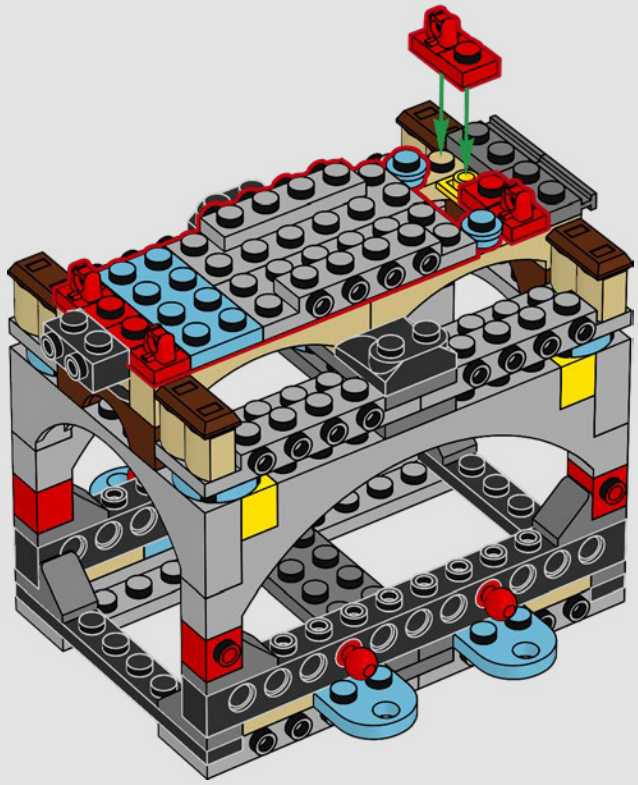

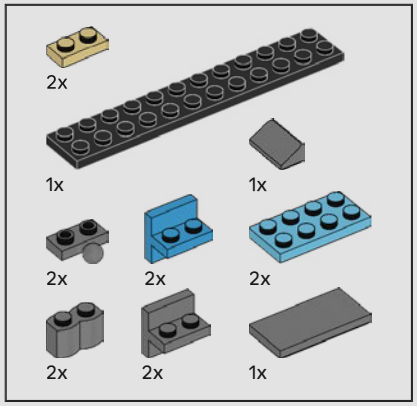


17

1

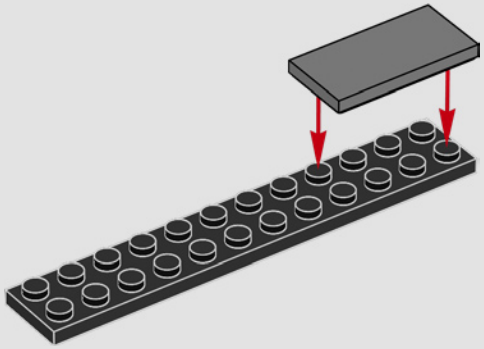

2

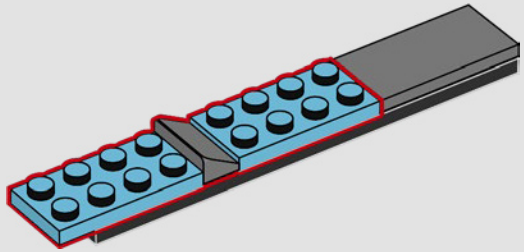

3

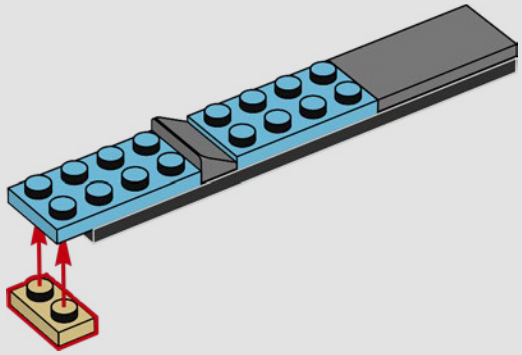

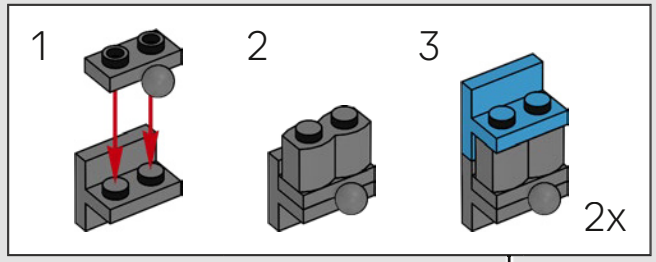


4

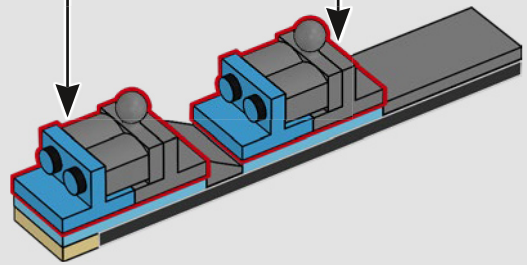

5

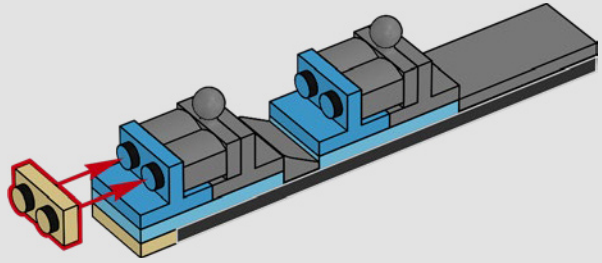

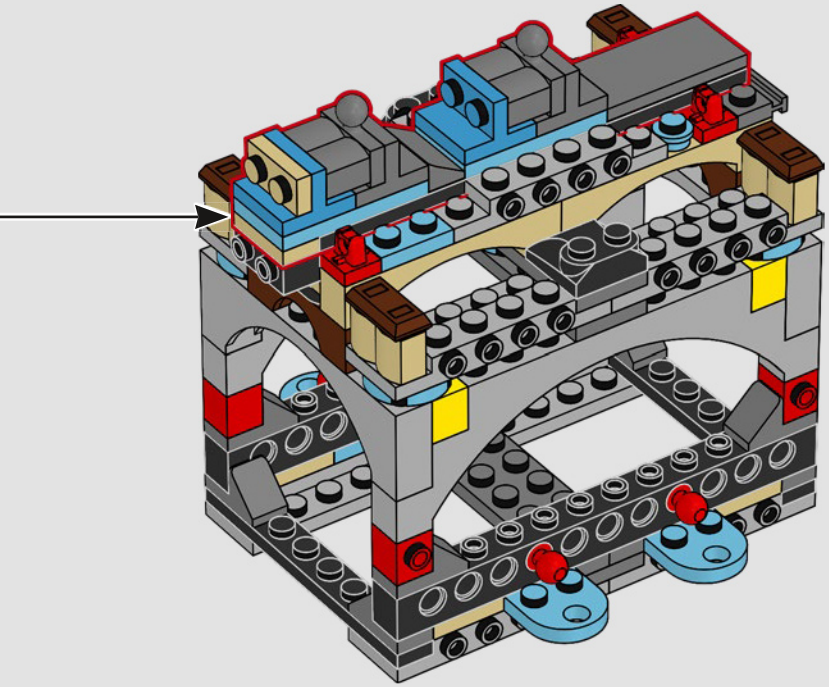

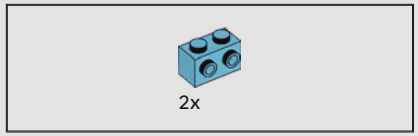


18

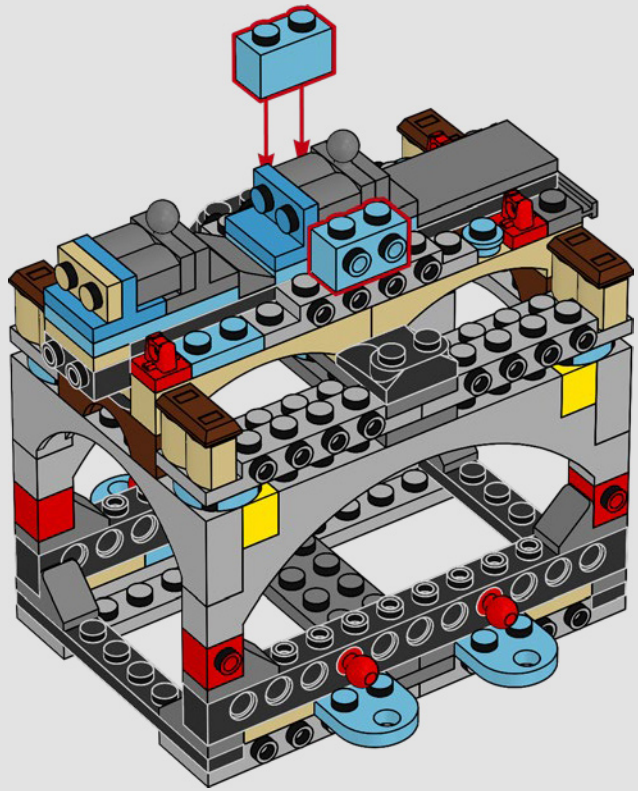



2x

19

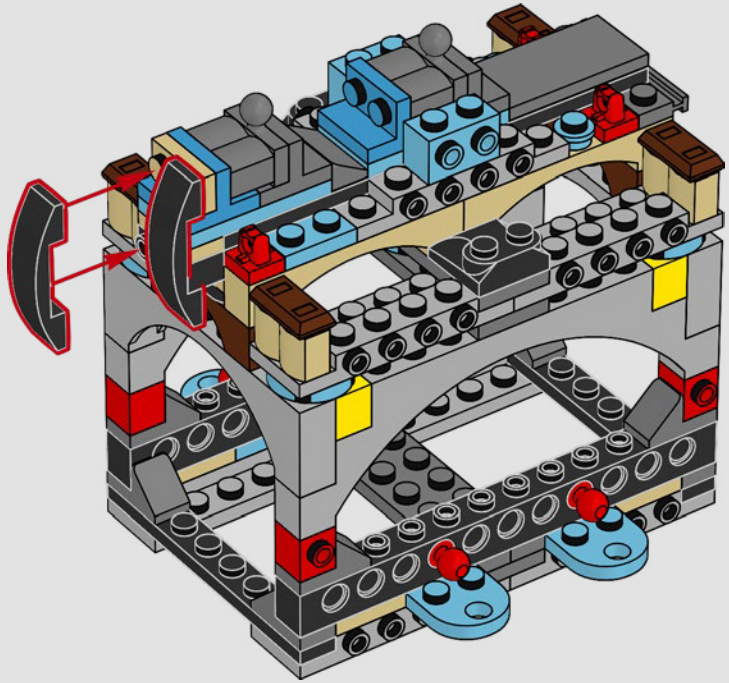




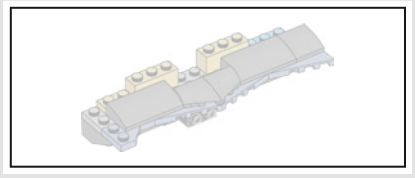

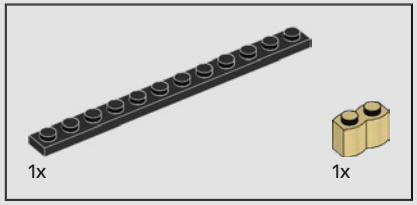


20

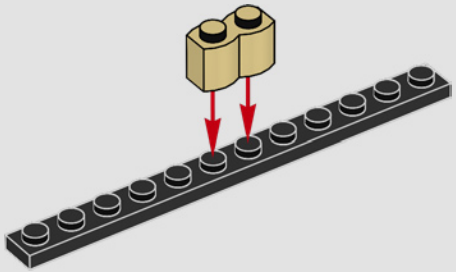

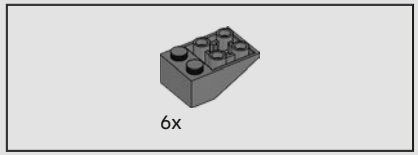


21

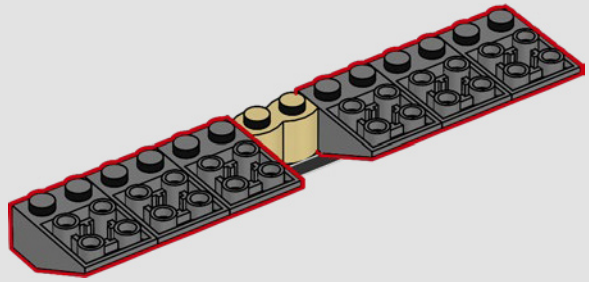

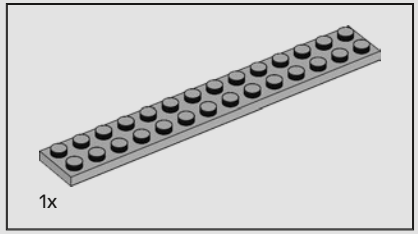


22

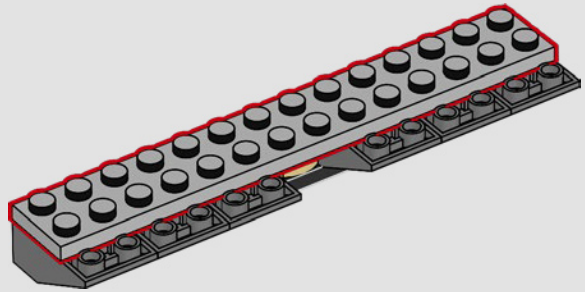

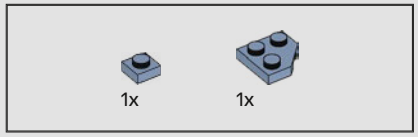


23

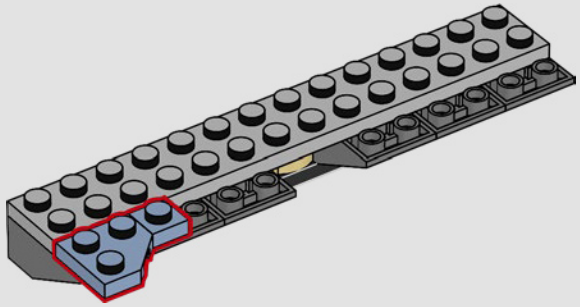

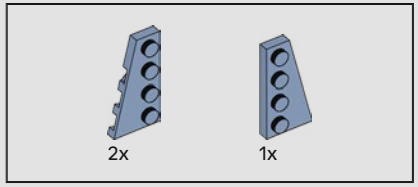


24

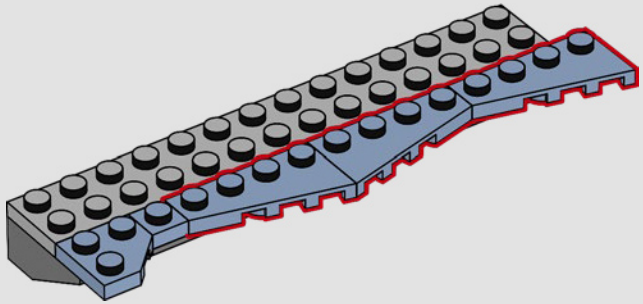

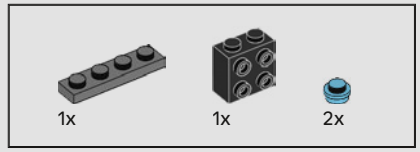


25

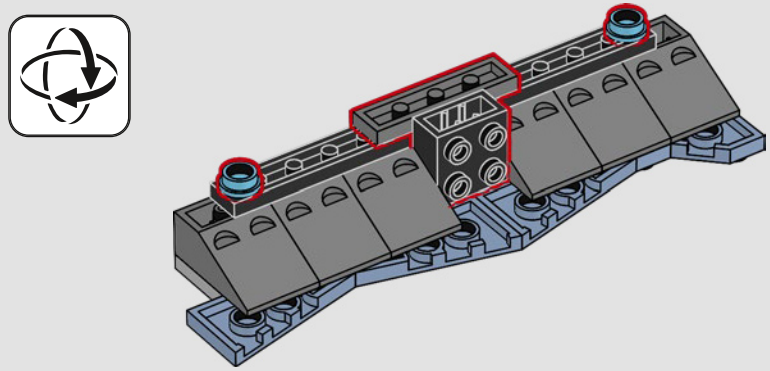

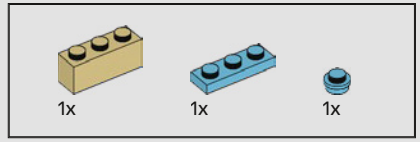


26

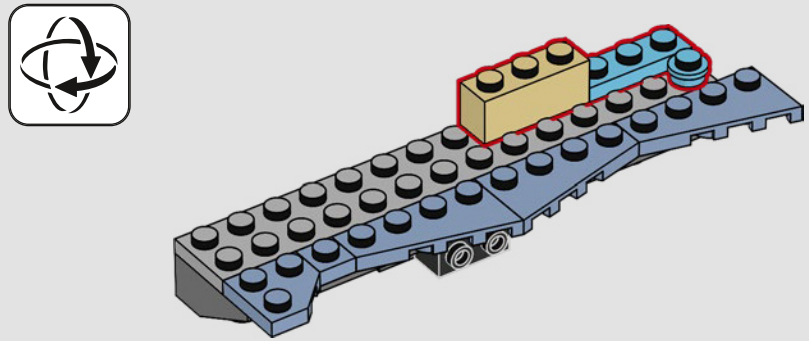

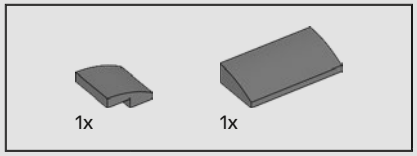


27

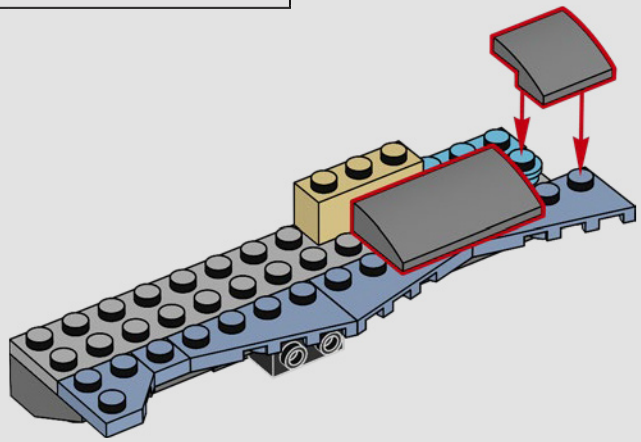

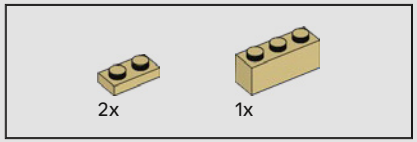


28

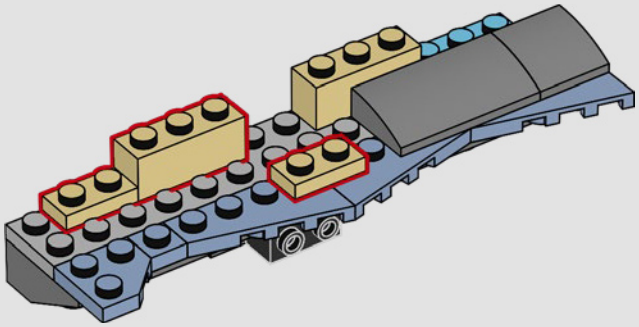

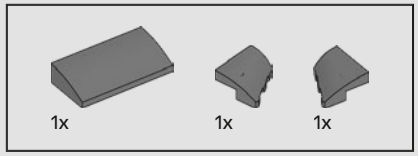


29

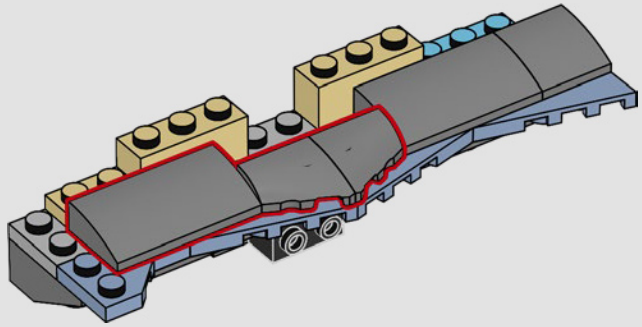

30

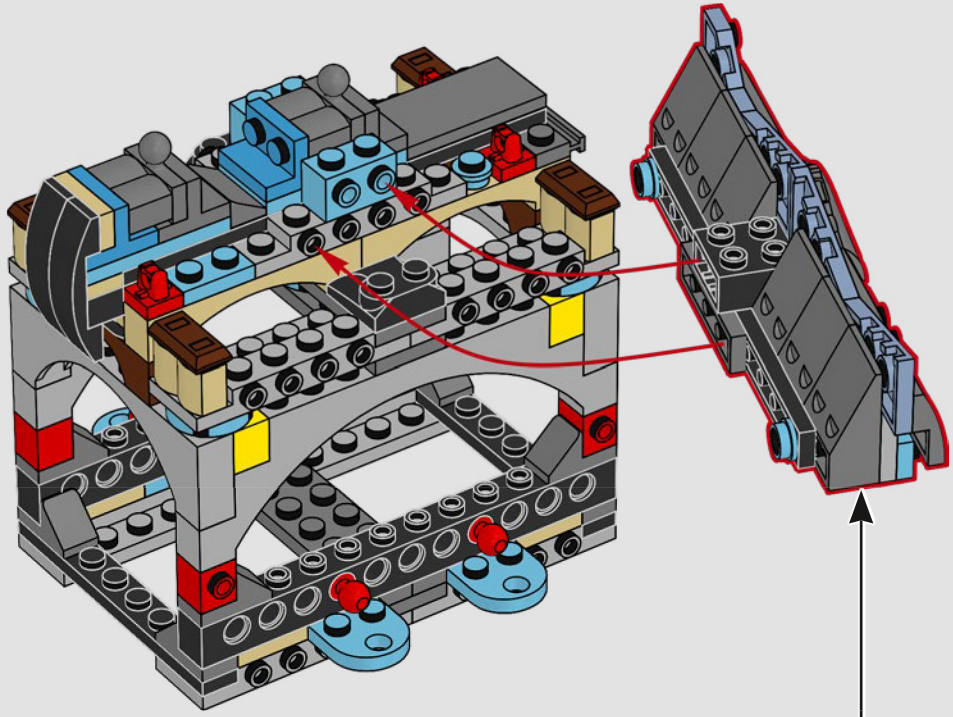

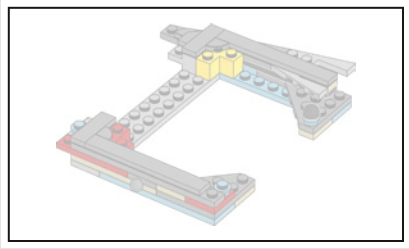

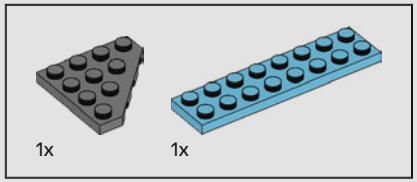


31

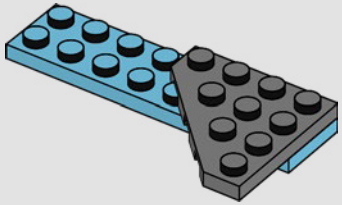

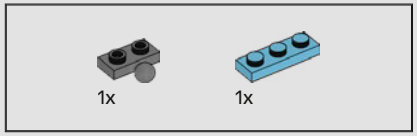


32

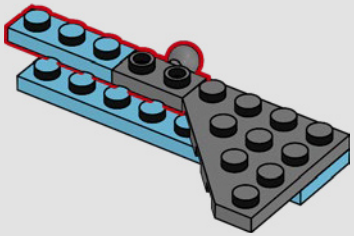

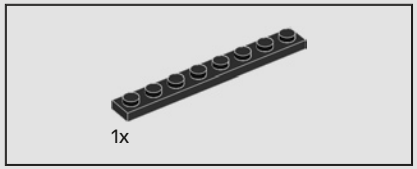


33

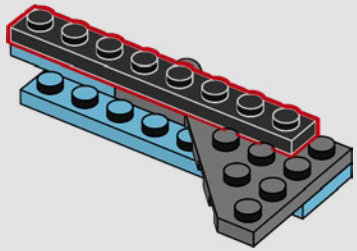

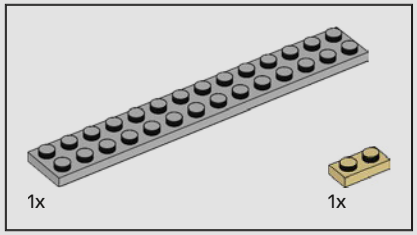


34

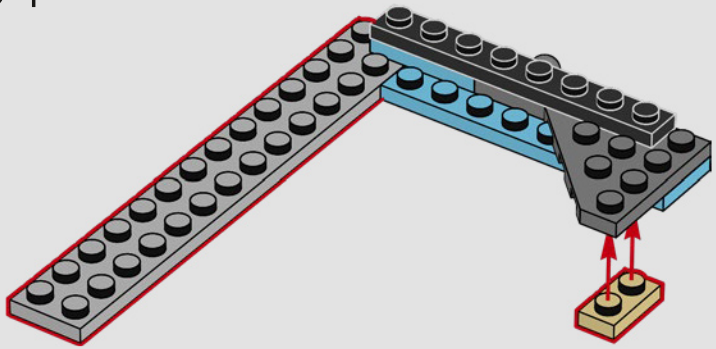

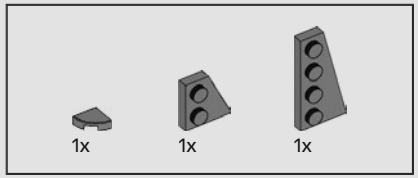


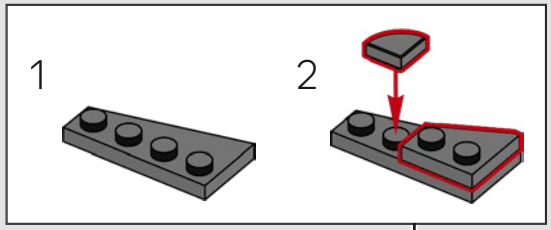


35

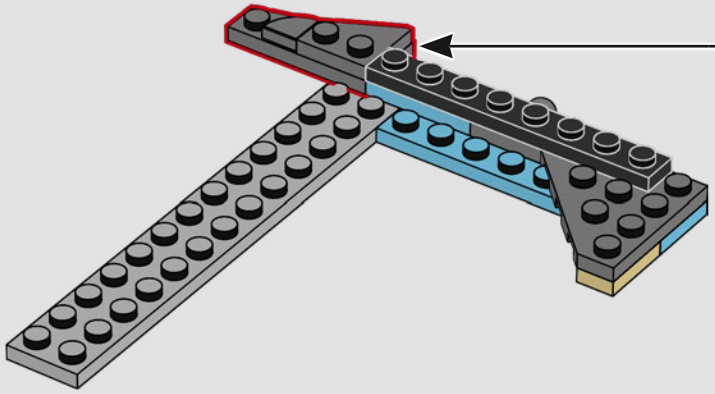

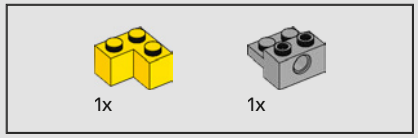


36

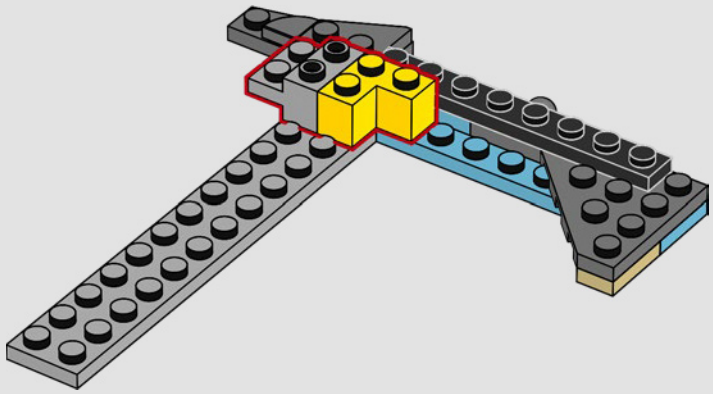

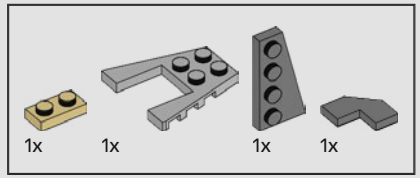


37

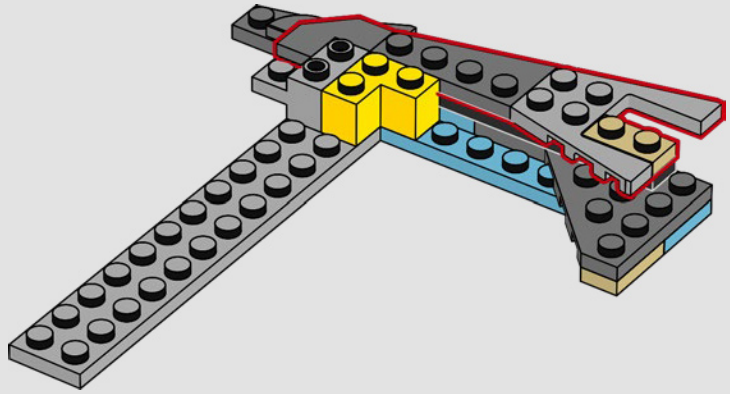




38

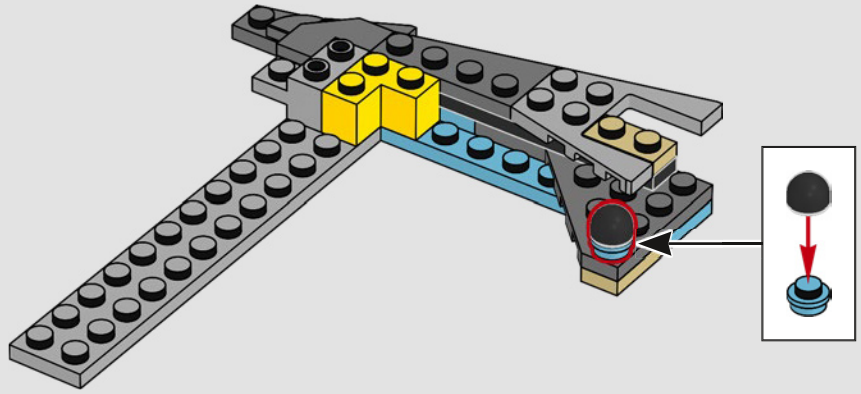

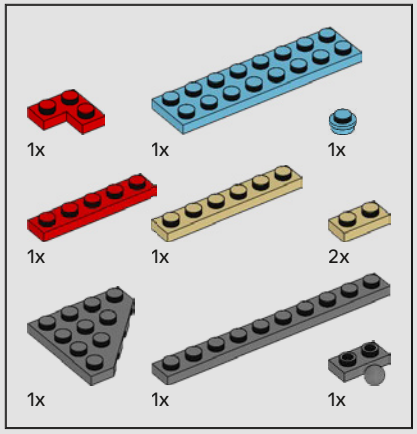


39

1

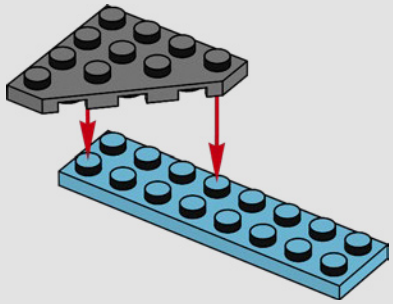

2

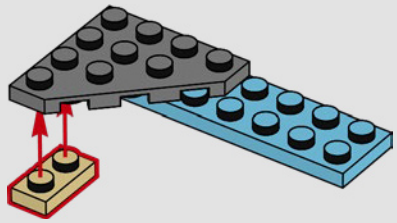

3

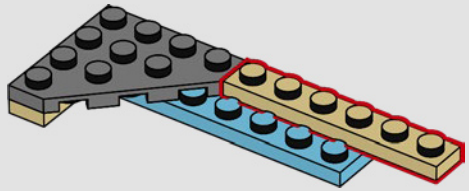

4

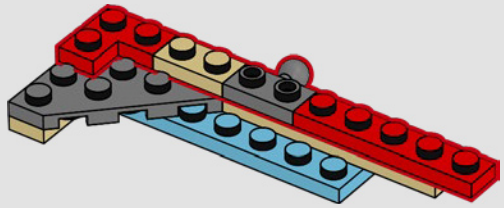

5

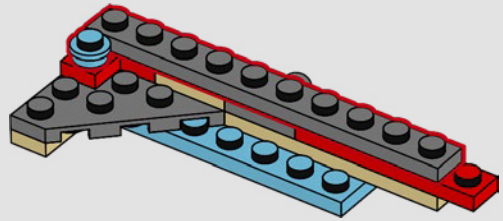

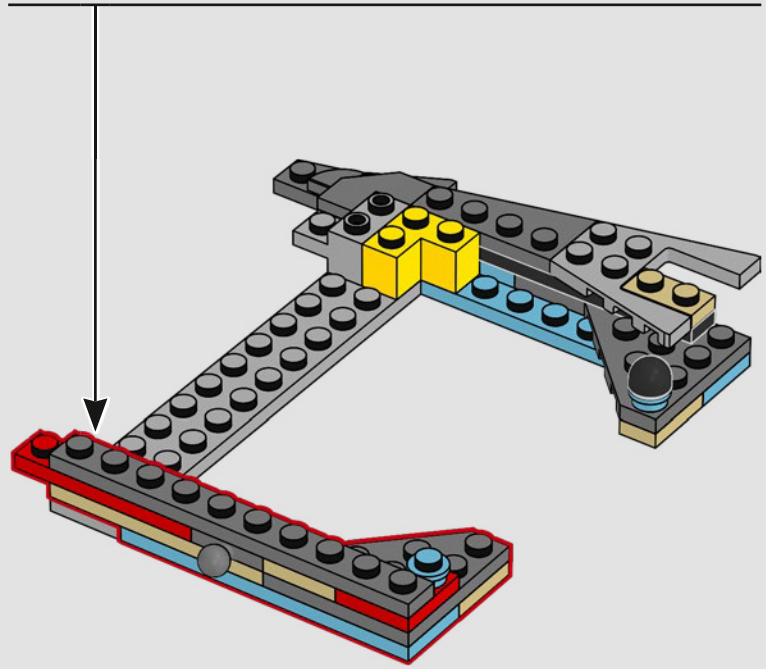

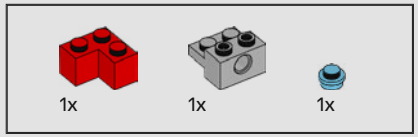


40

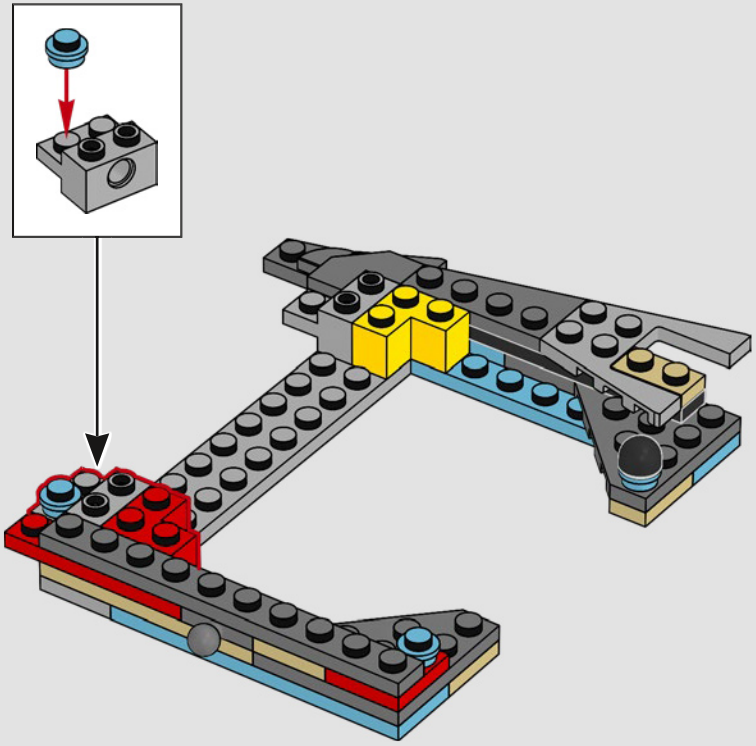

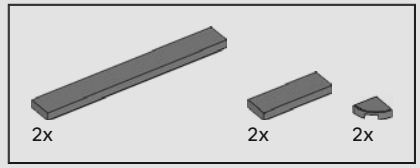


41

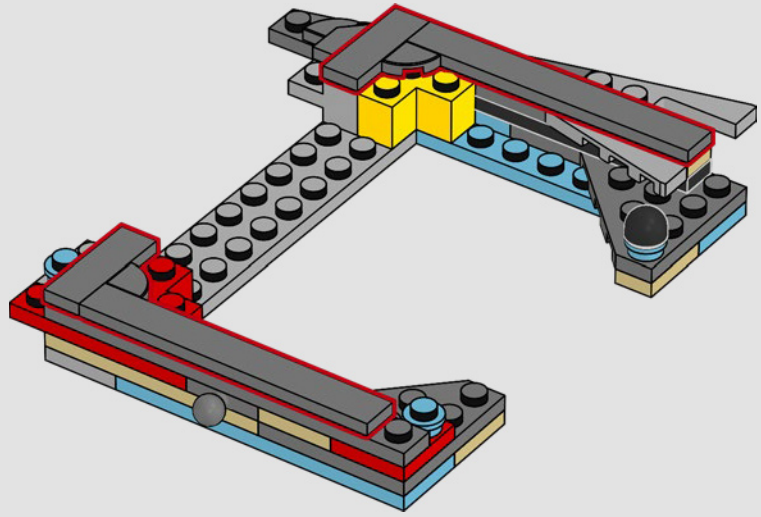

42

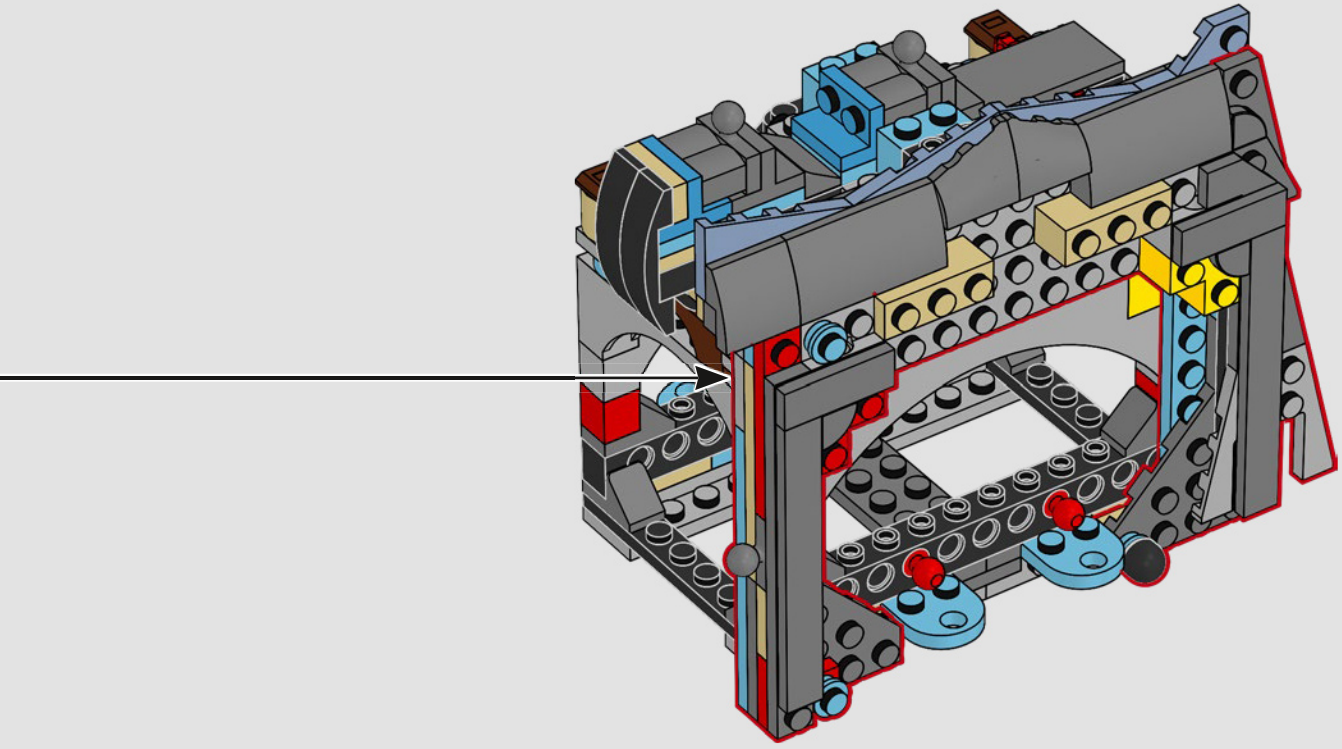

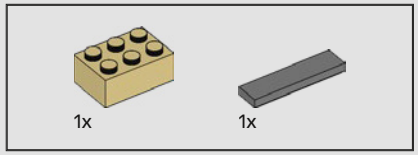


43

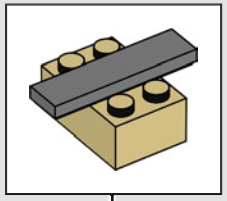

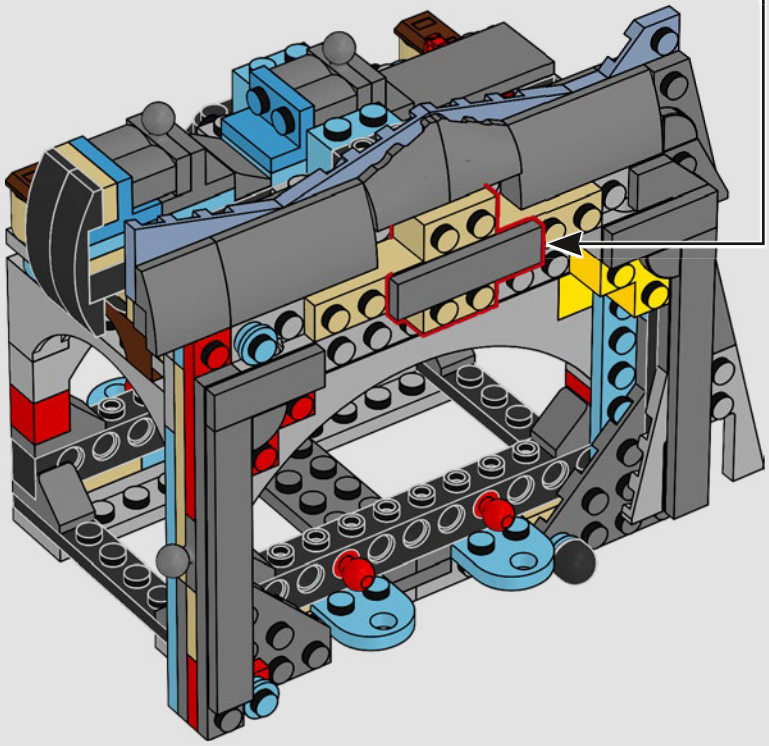

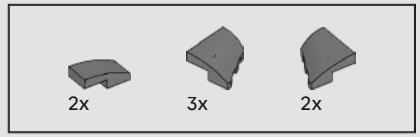


44

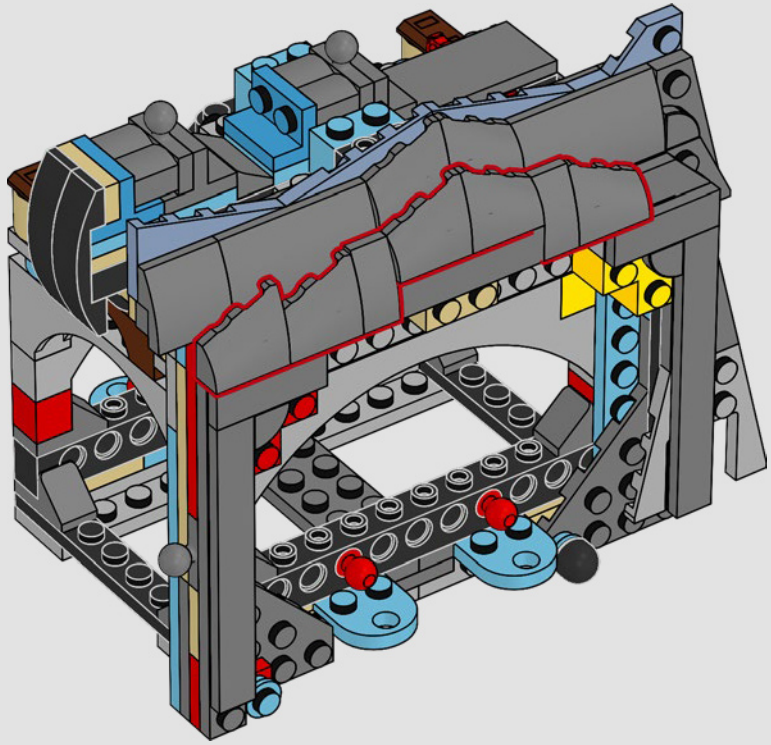

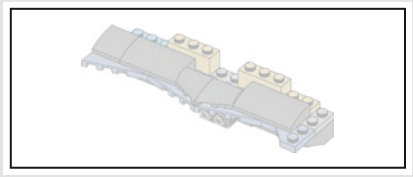

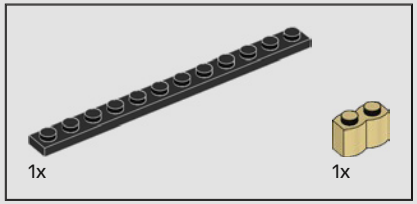


45

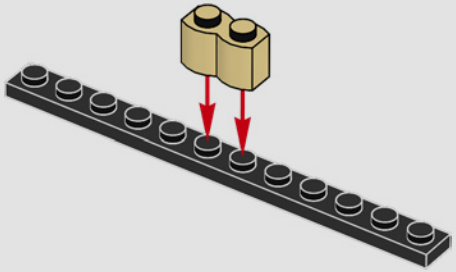

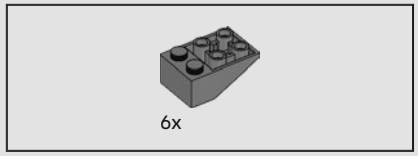


46

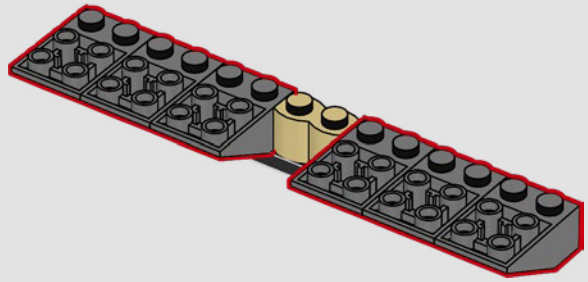

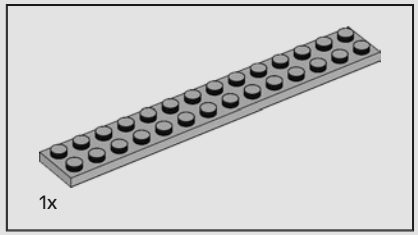


47

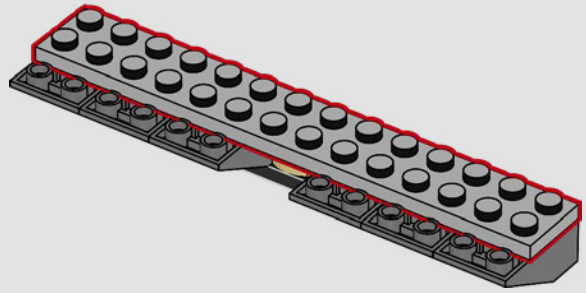

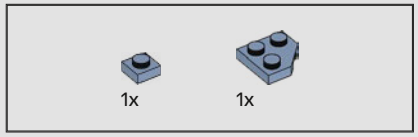


48

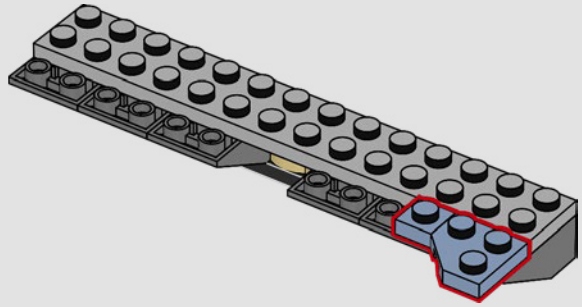

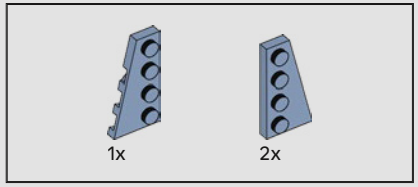


49

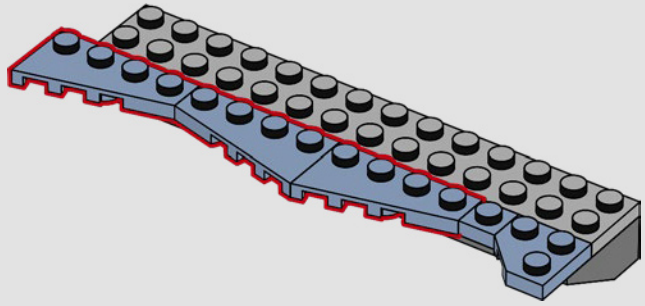

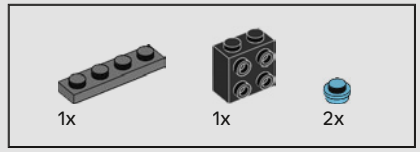


50



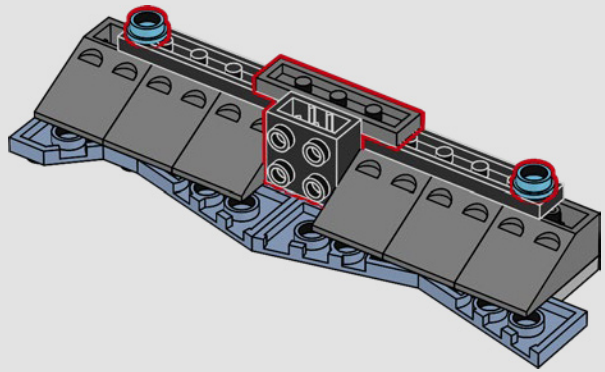

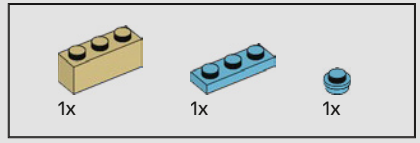


51



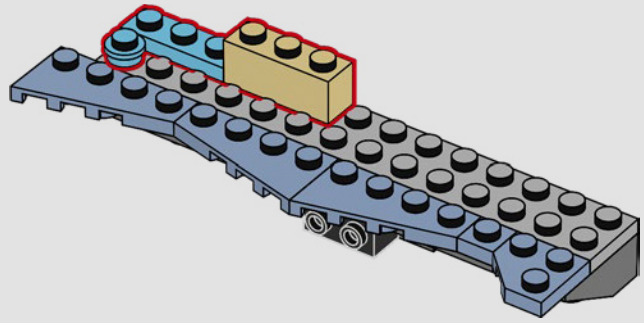

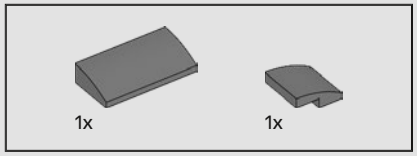


52

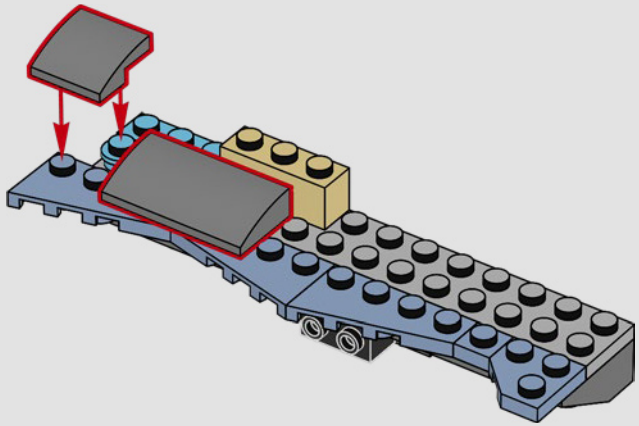

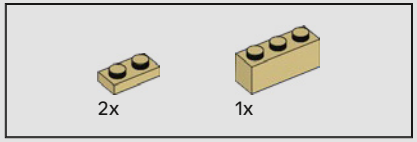


53

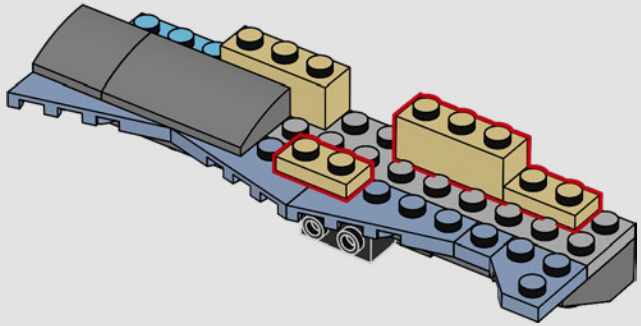

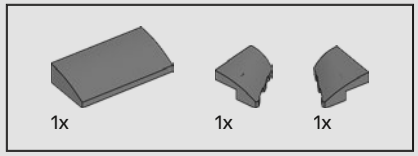


54

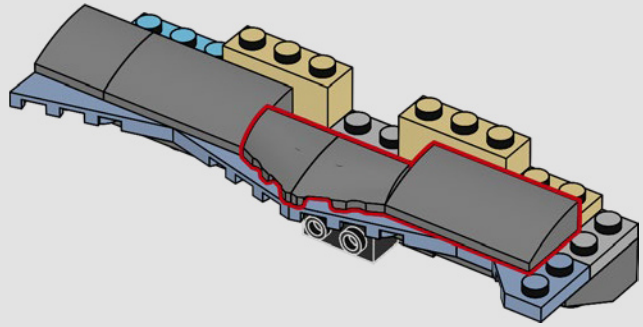

55

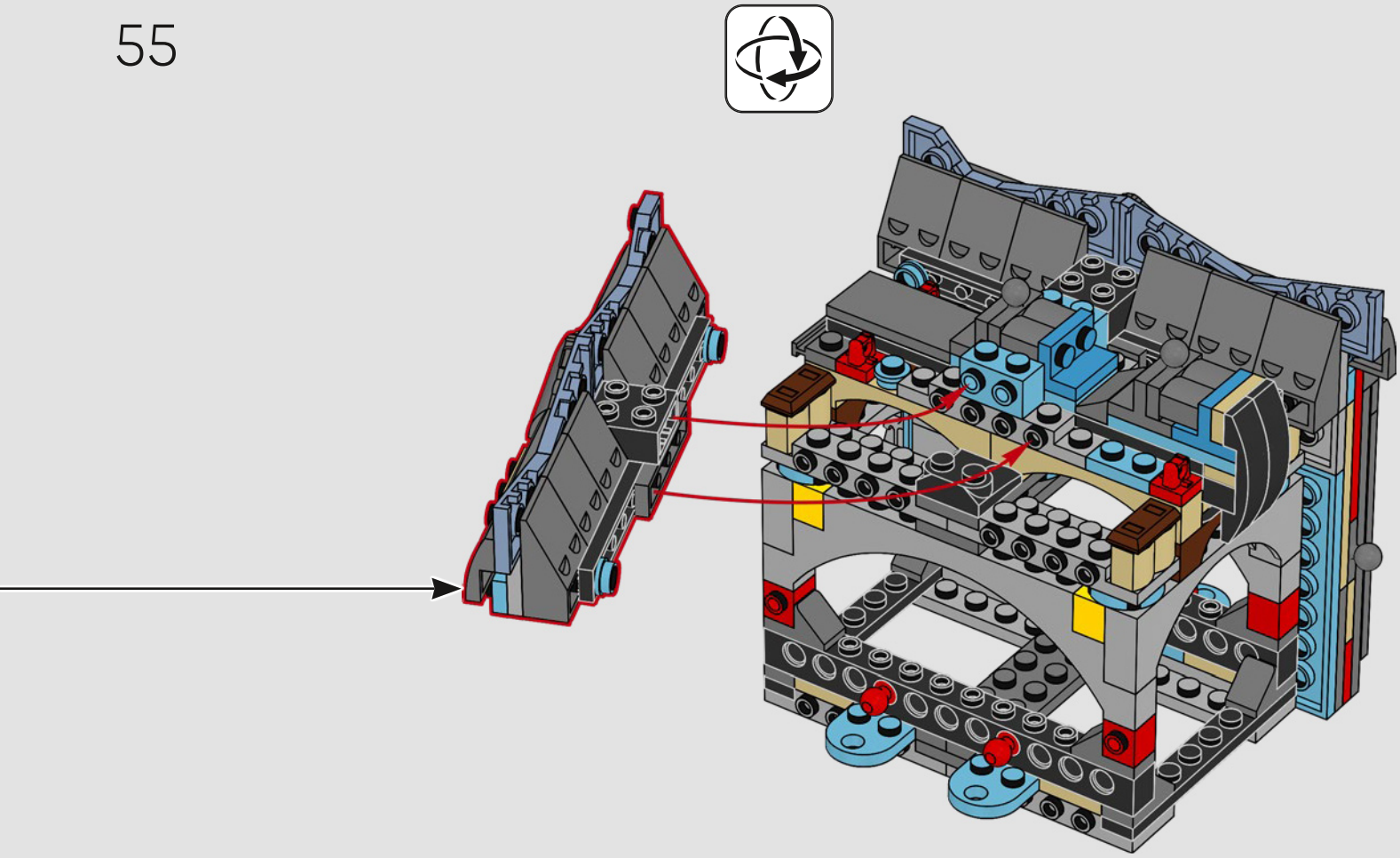

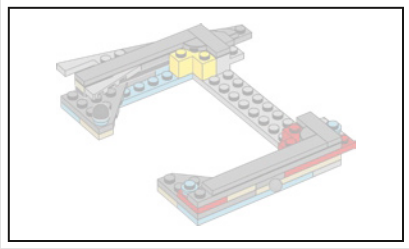

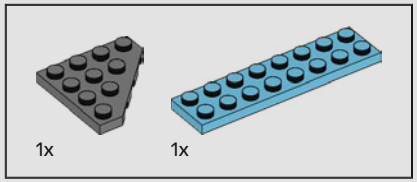


56

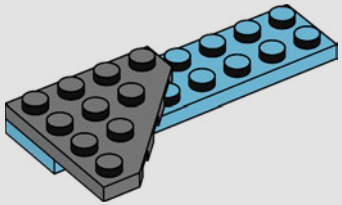

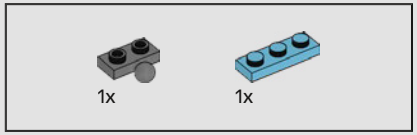


57

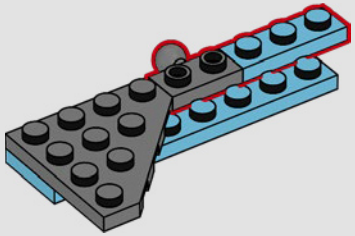

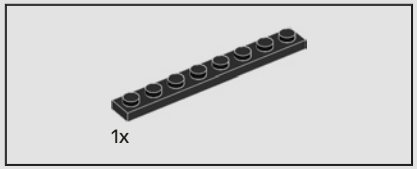


58

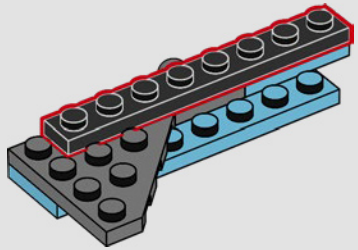

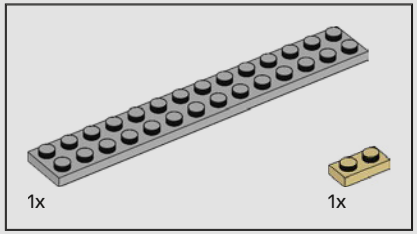


59

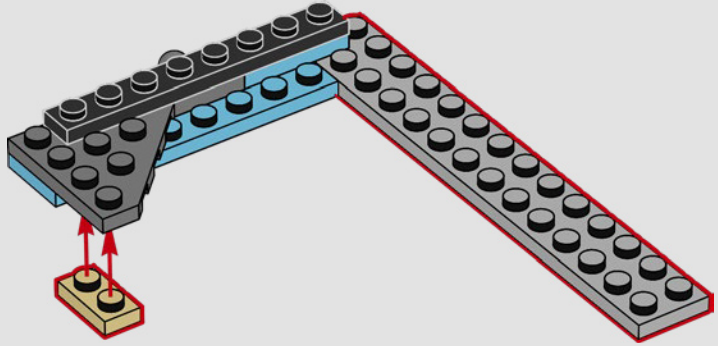

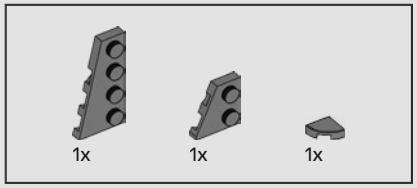


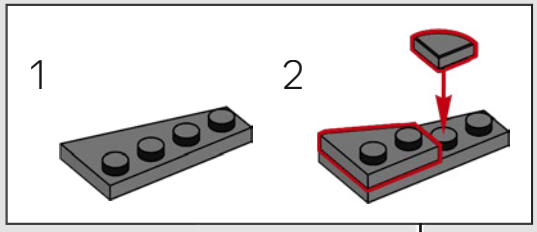


60

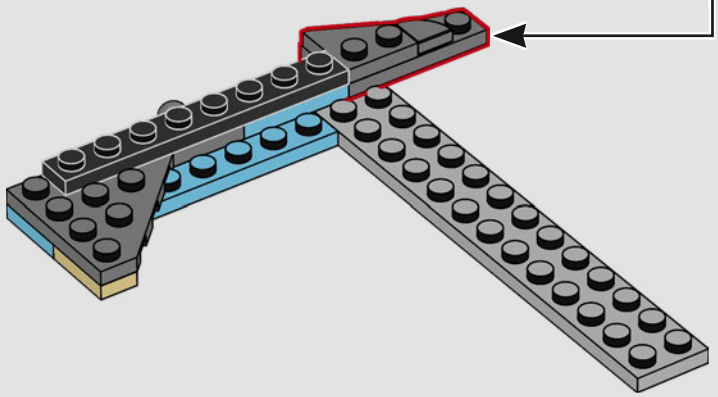

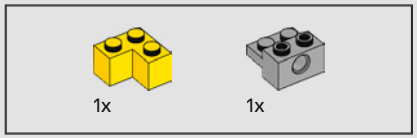


61

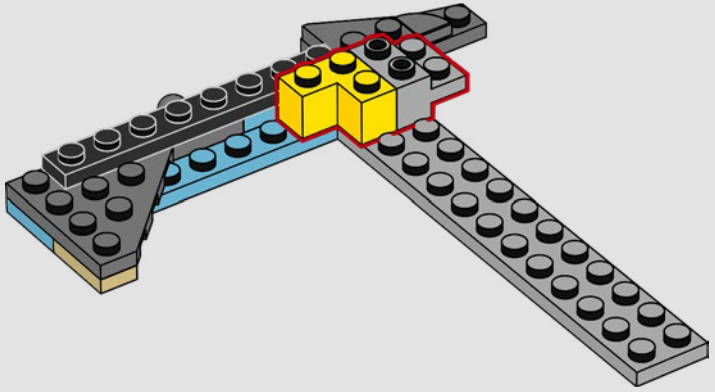

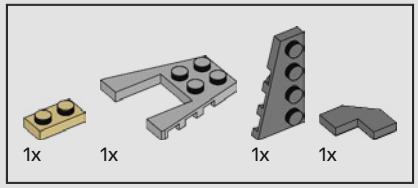


62

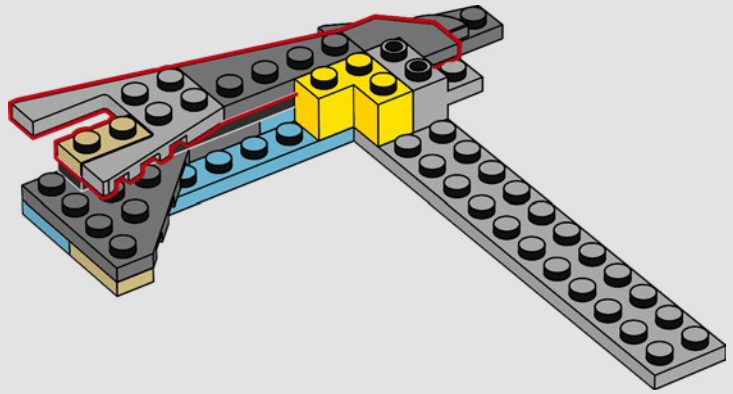




63

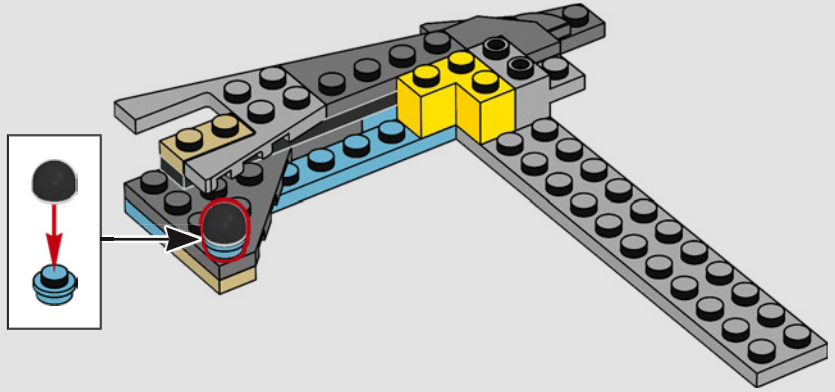

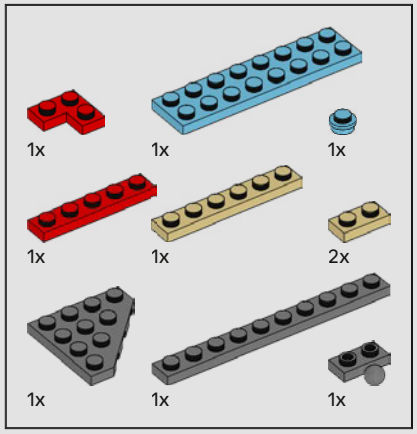


64

1

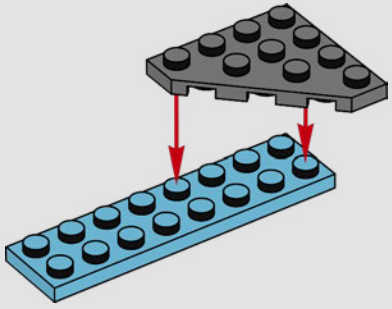

2

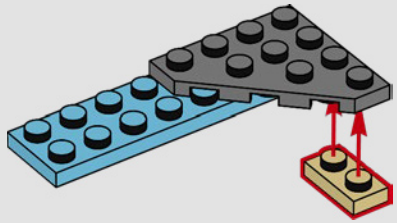

3

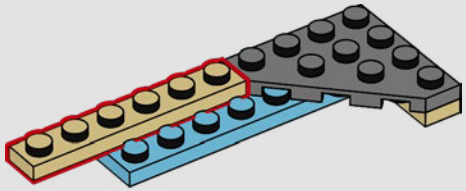

4

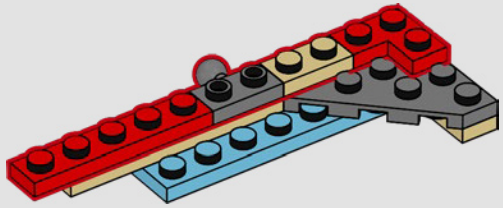

5

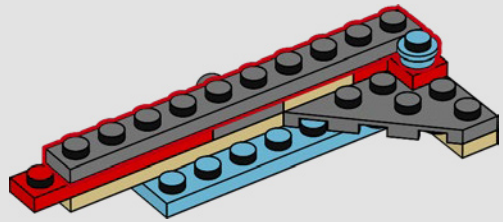

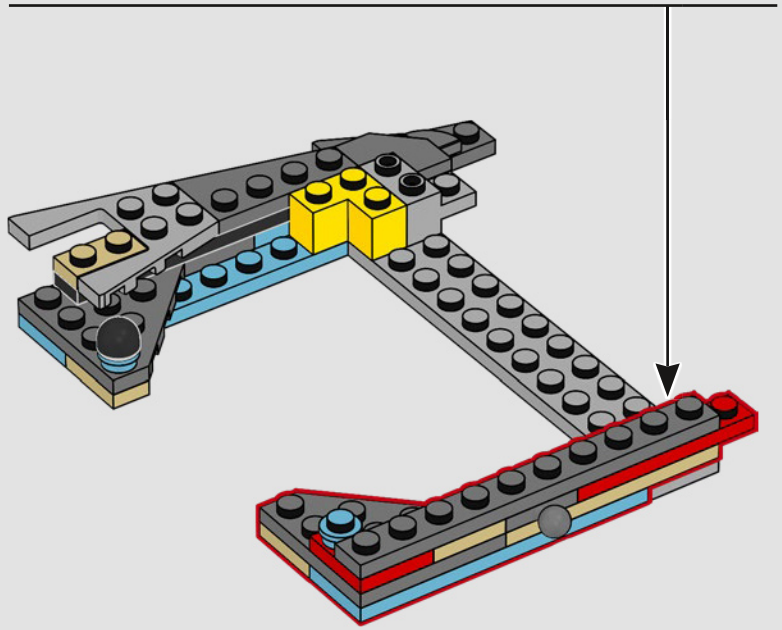

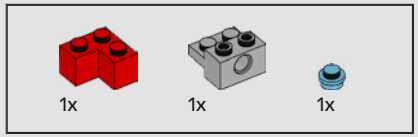


65

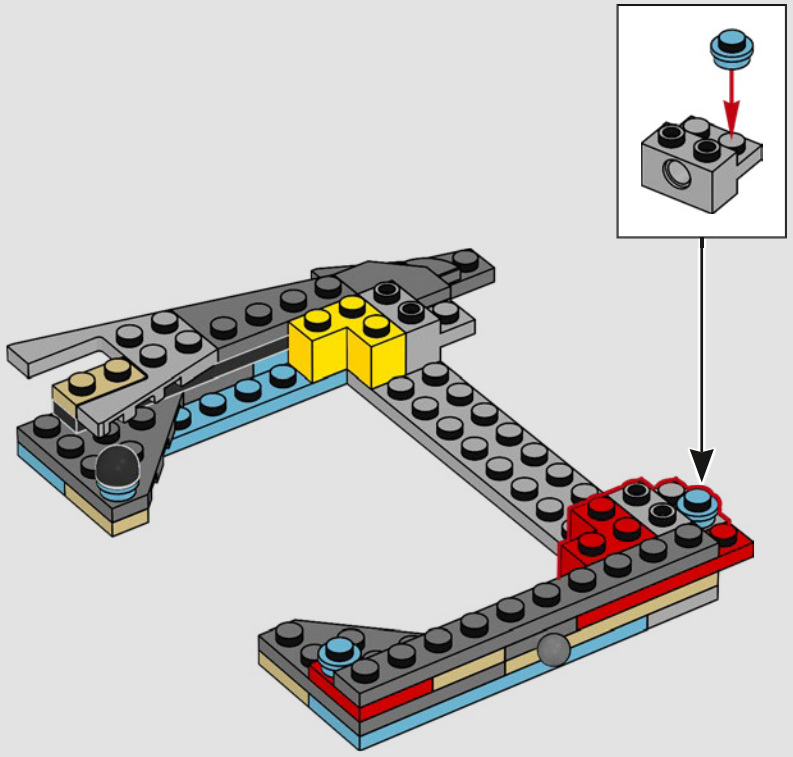

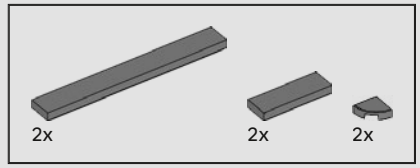


66

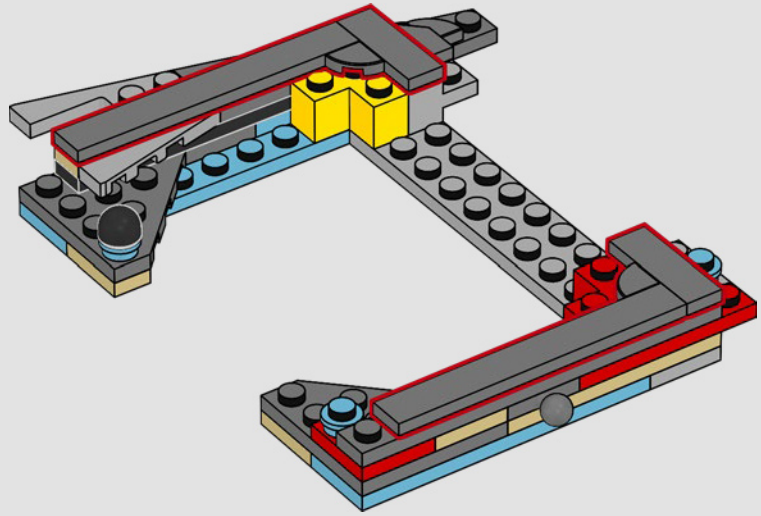

67

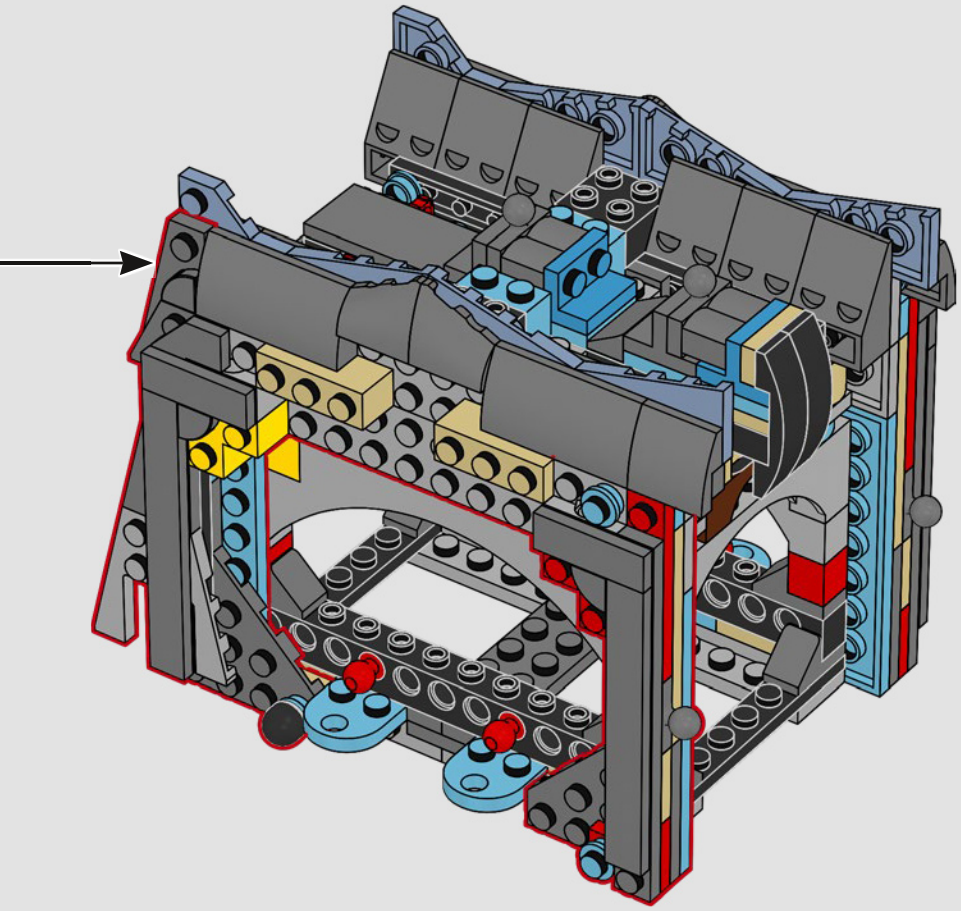

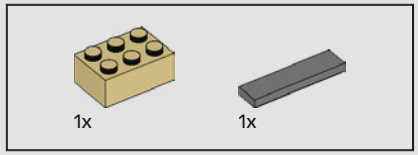


68

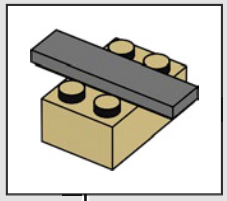

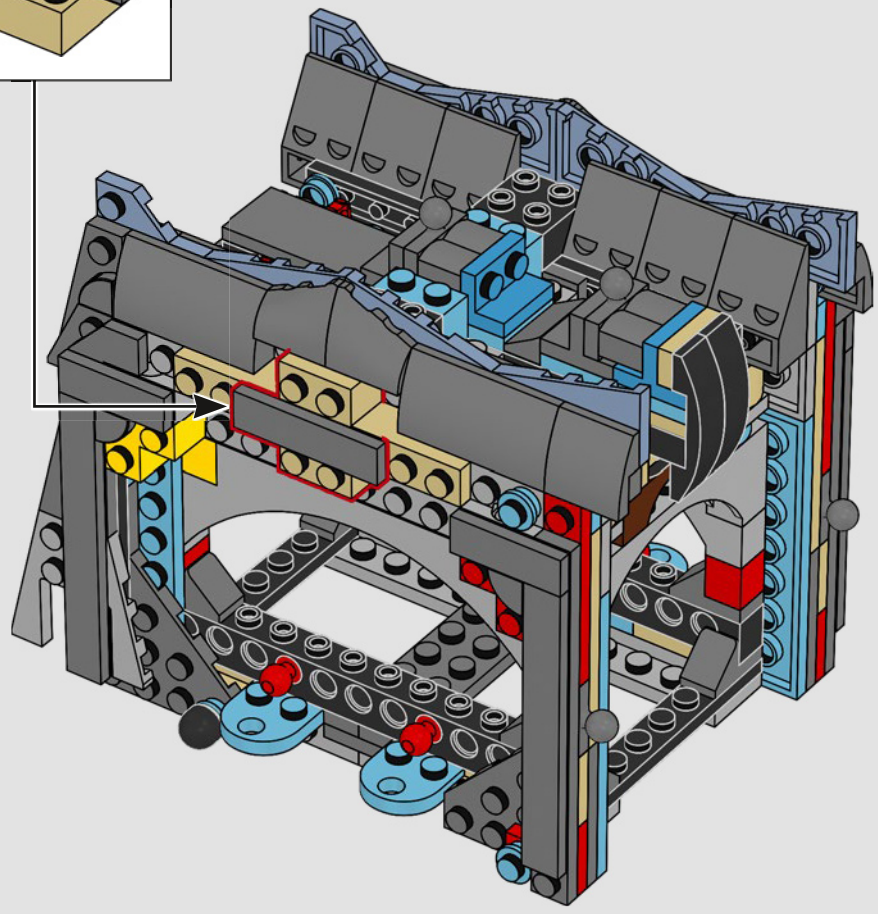

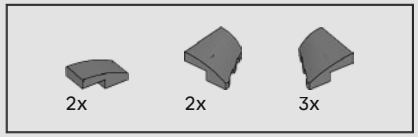


69

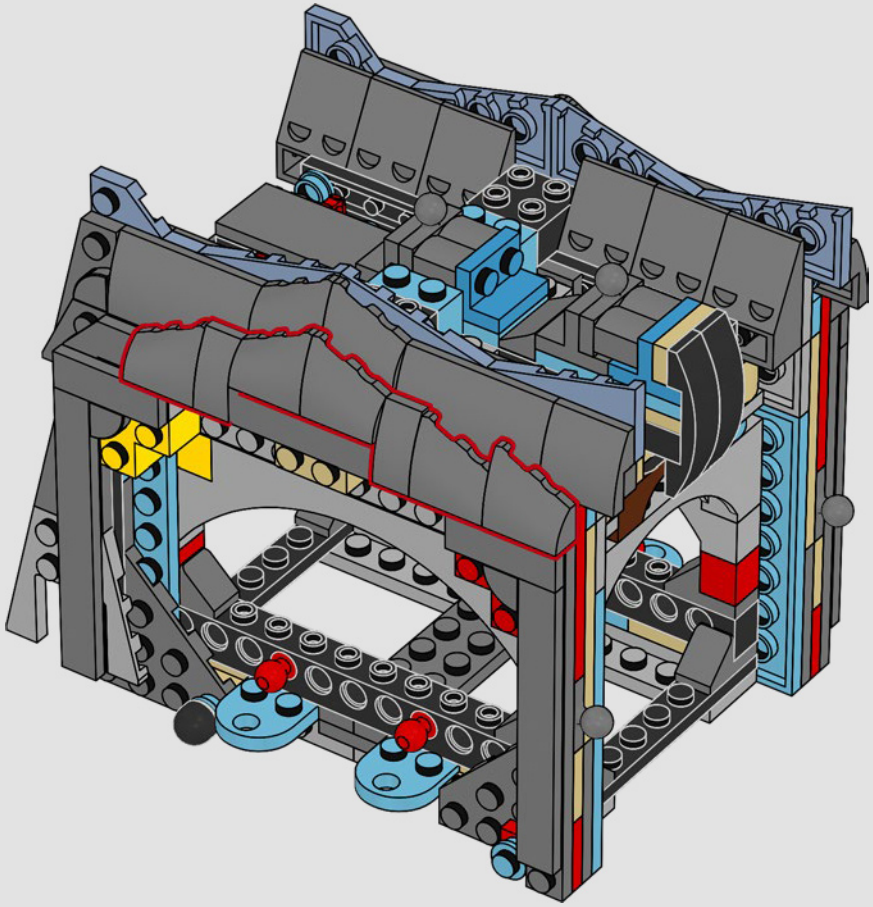


3

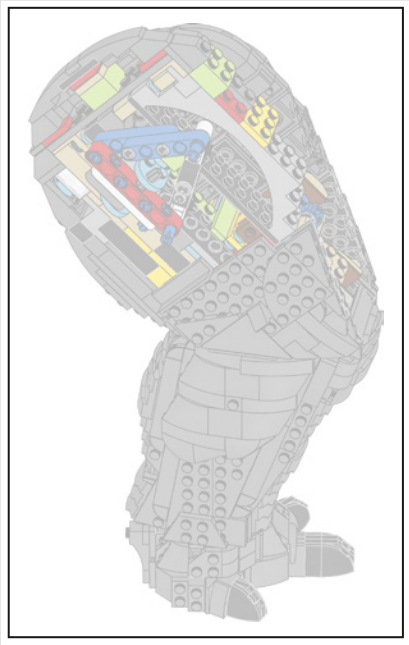

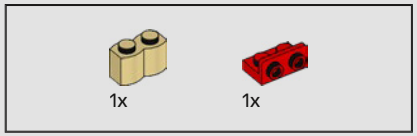


70

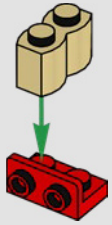

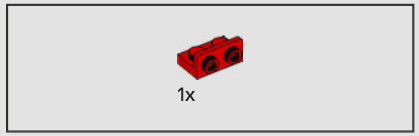


71

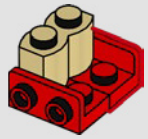

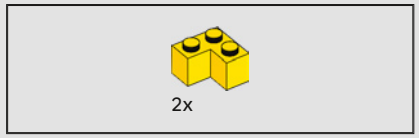


72

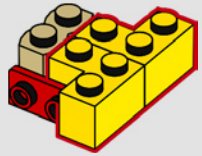

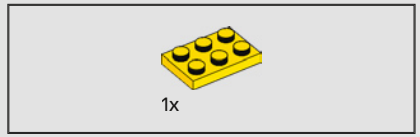


73

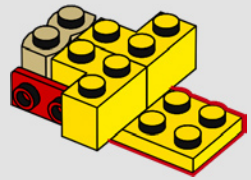

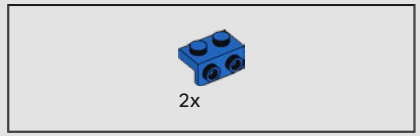


74

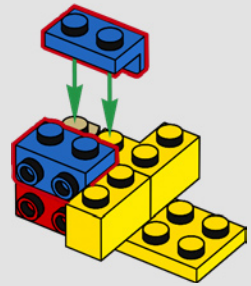




75

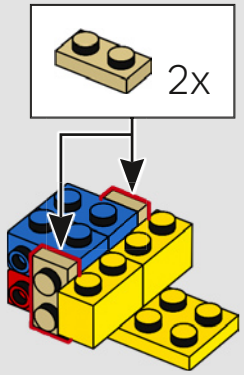


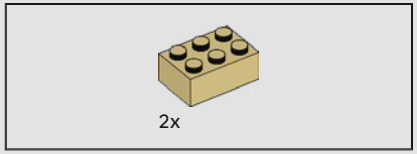


76

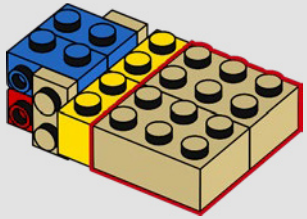

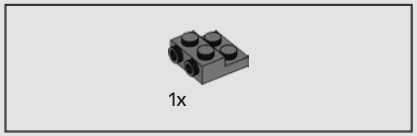


77

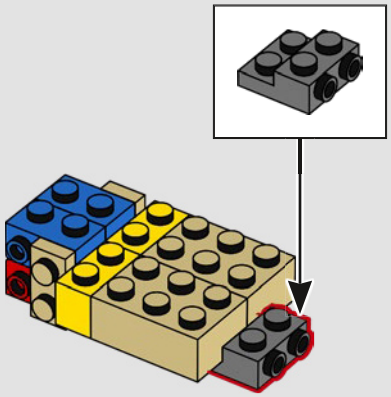

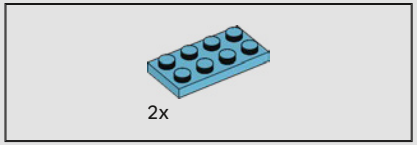


78

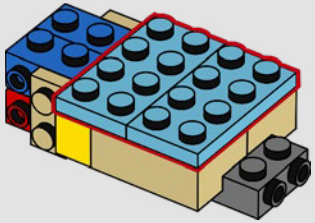




79

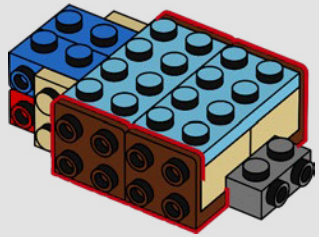

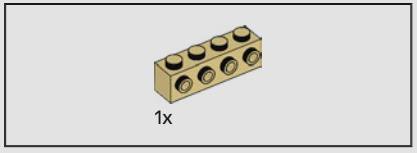


80

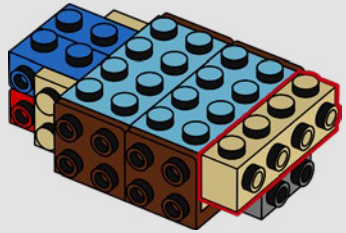

2x 2x

81

2x

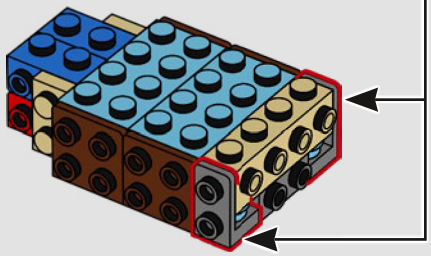

1x 1x

82

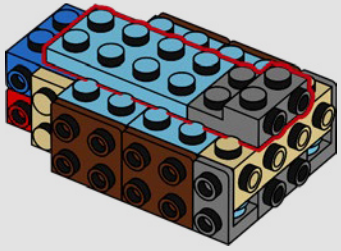

4x

83

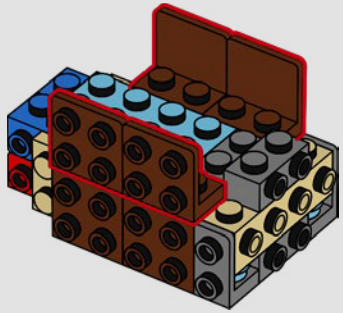

1x

84

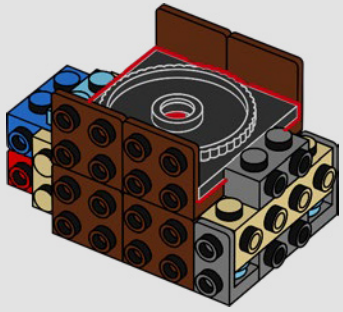

2x 2x

85

2x

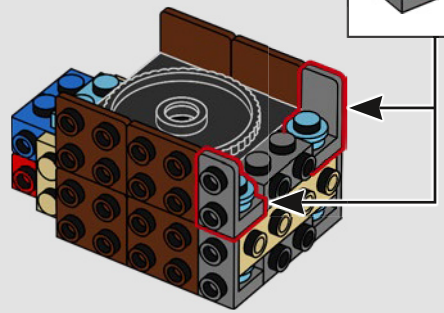

2x

86

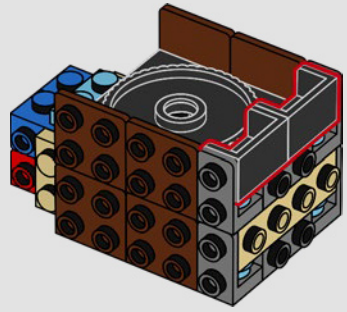

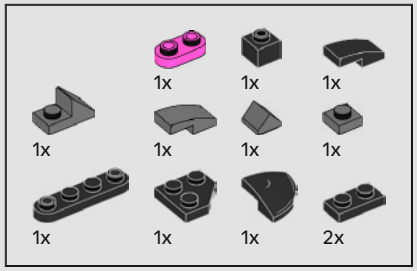


87

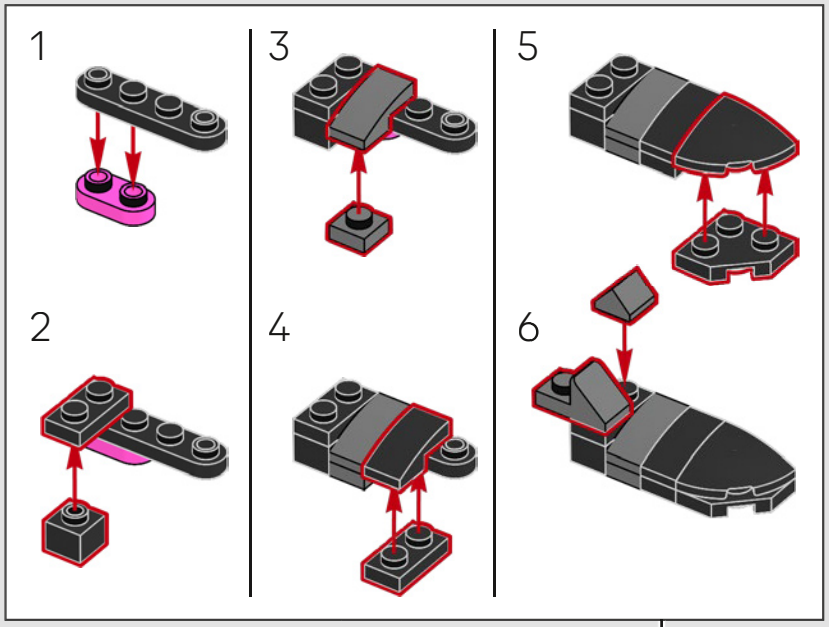


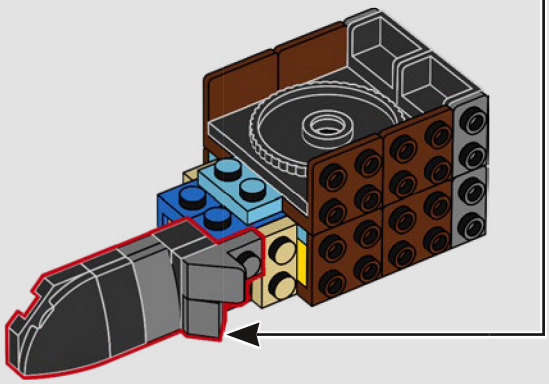

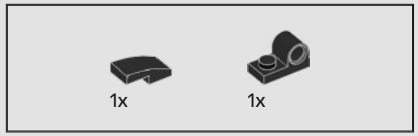


88

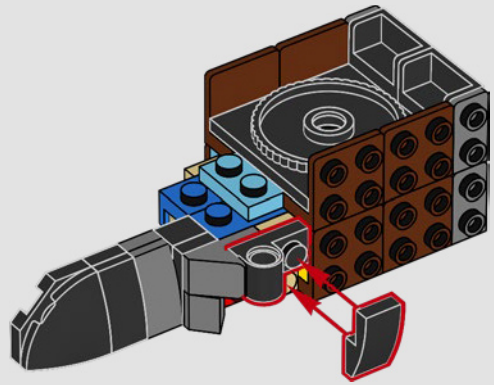

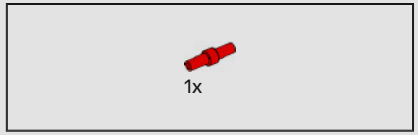


89

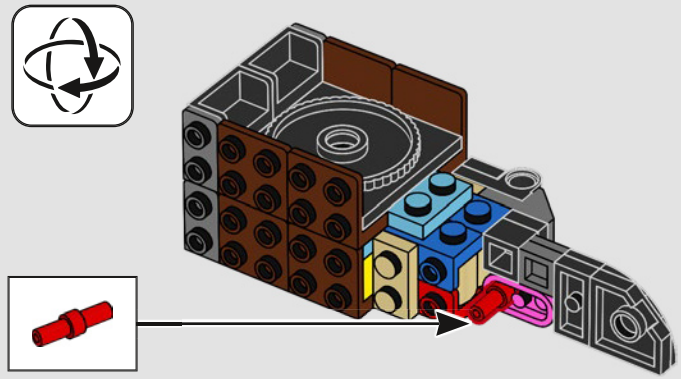

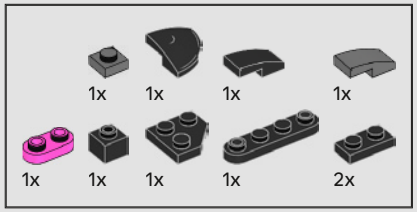


90

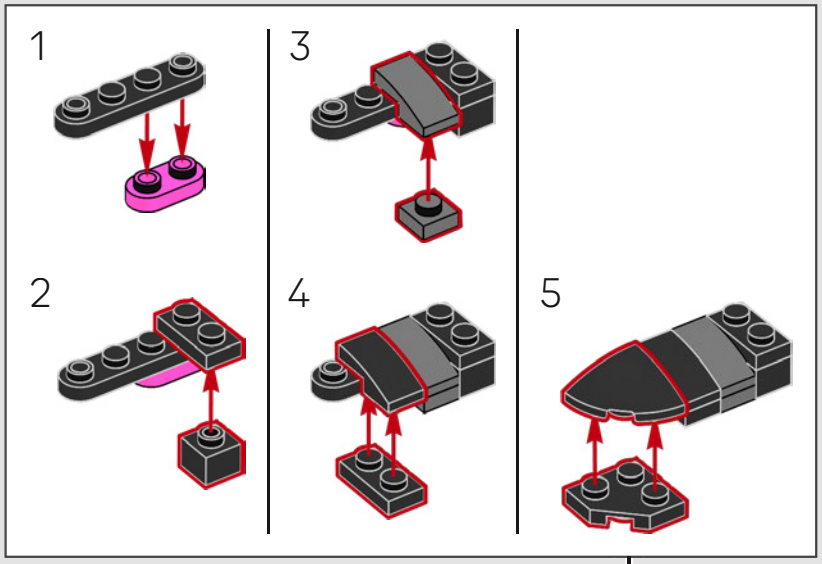


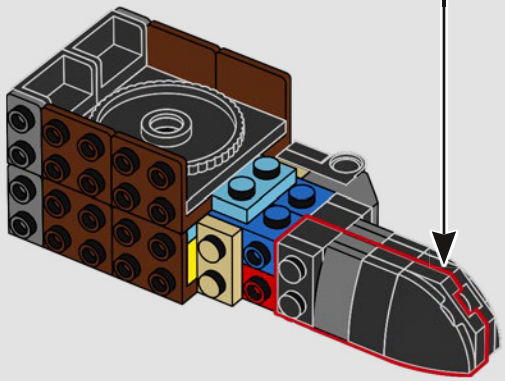

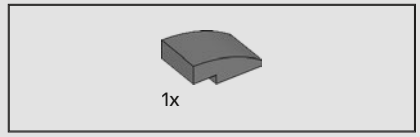


91

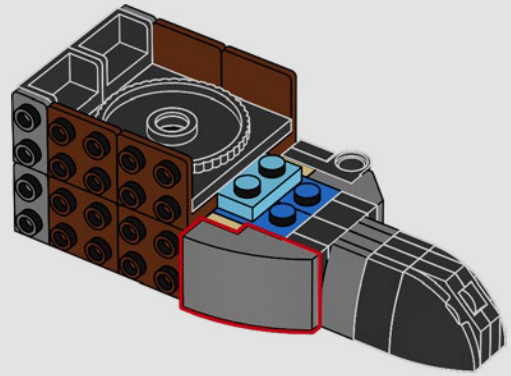

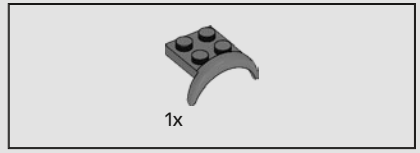


92

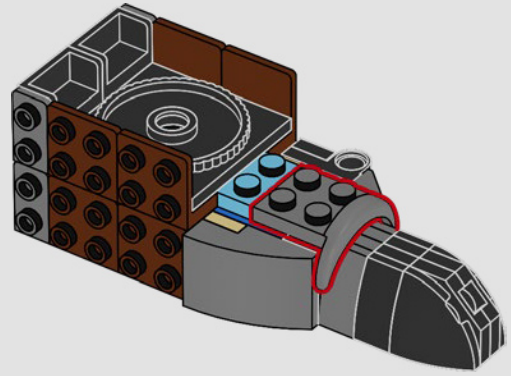




93

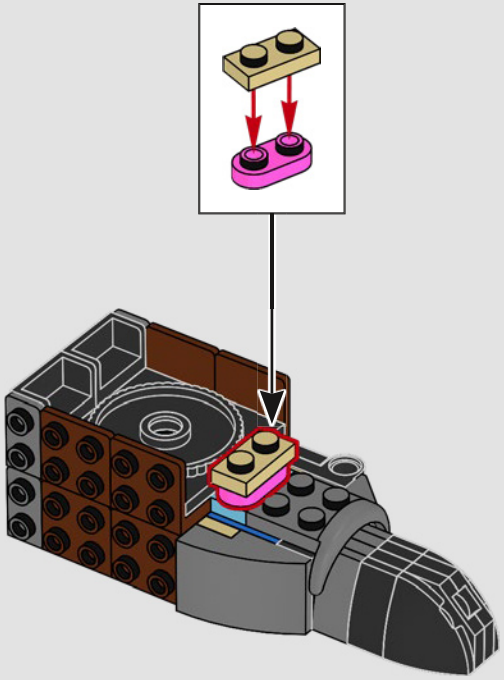

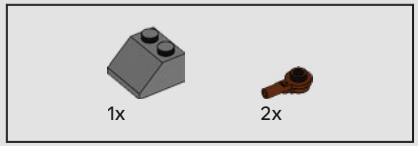


94

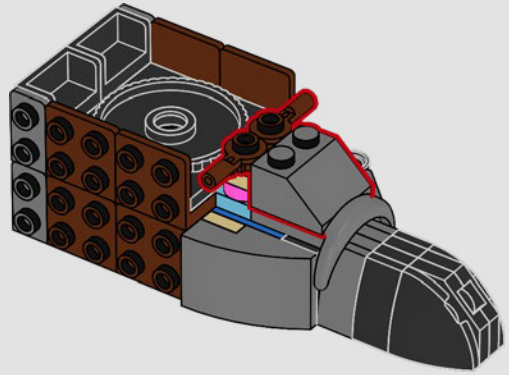

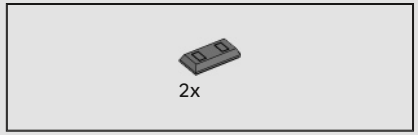


95

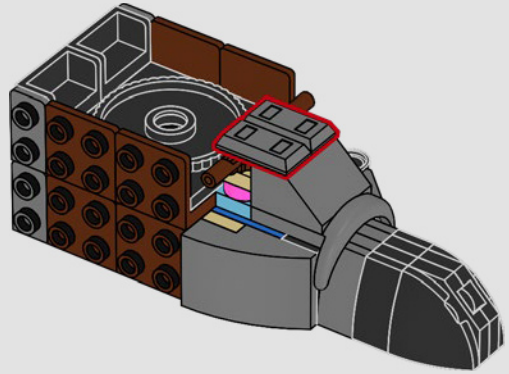

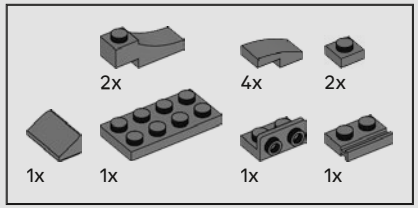


96

1

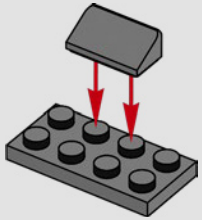

2

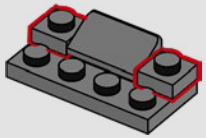

3

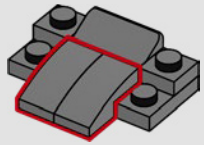

4

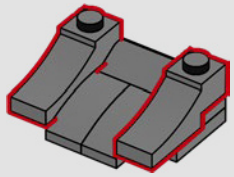

5

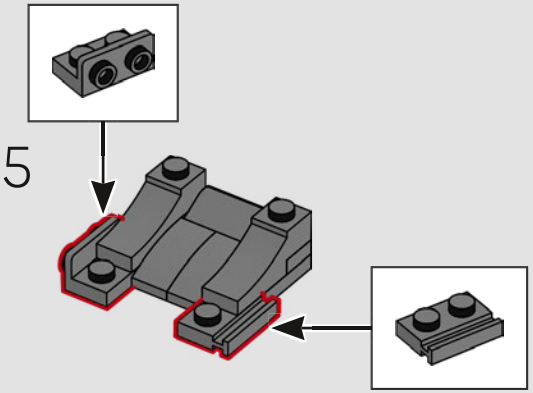

6

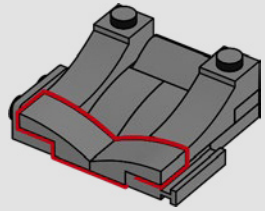

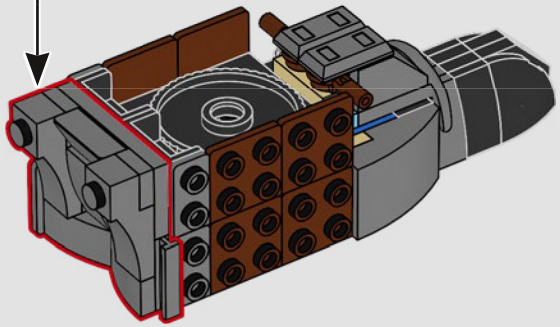

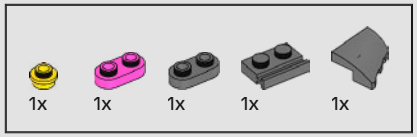


97

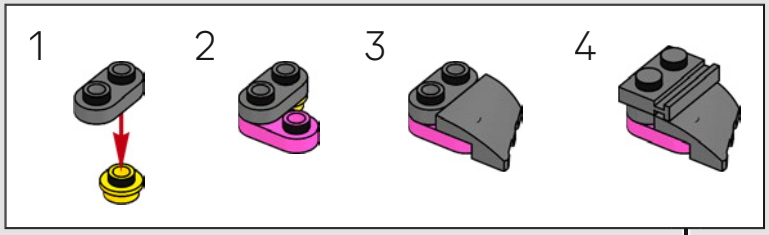


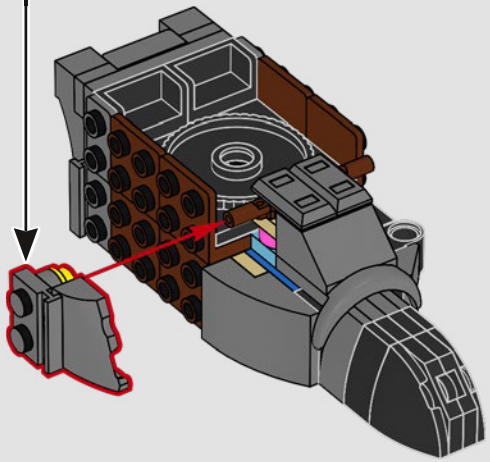

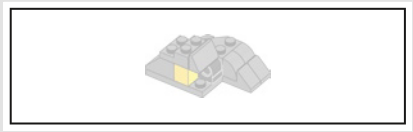

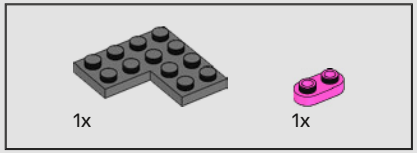


98

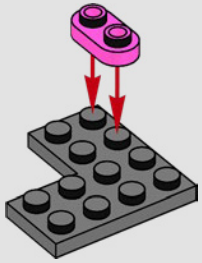

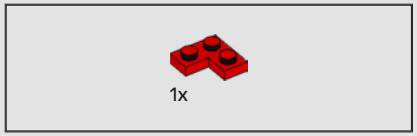


99

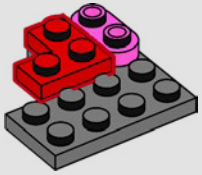

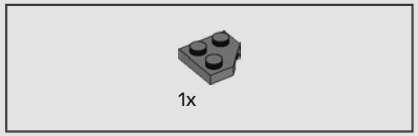


100

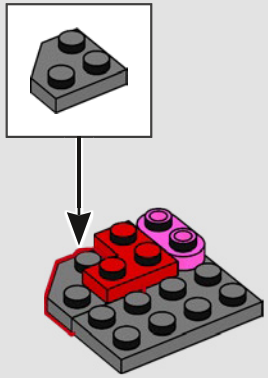

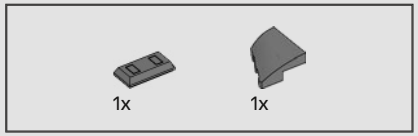


101

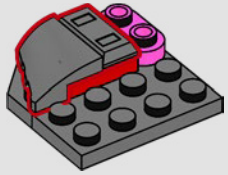




102

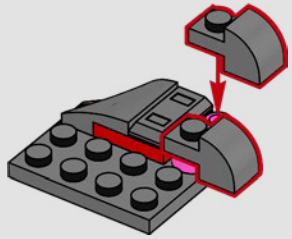

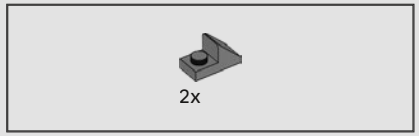


103

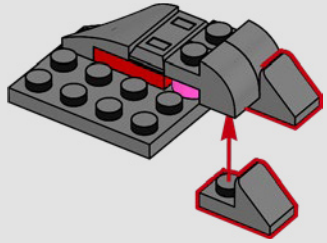

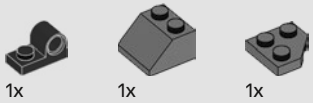


104

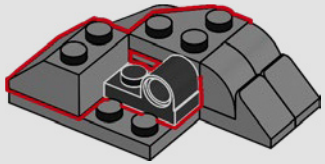




105

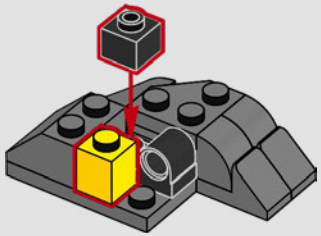

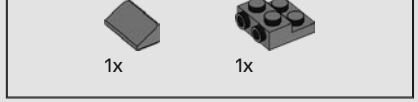


106

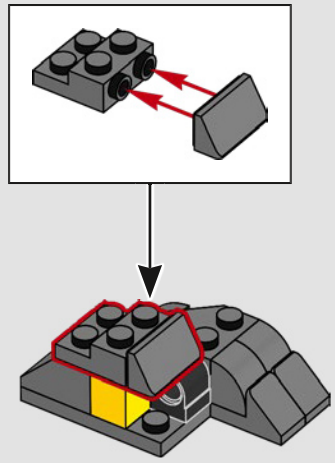

107

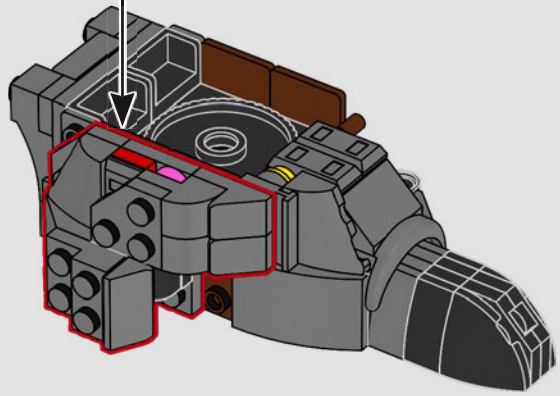

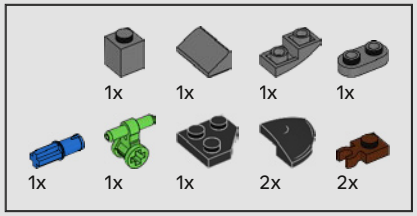


108

1

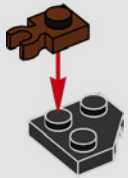

2



3

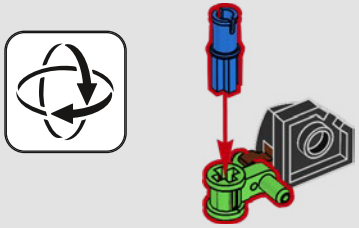

4

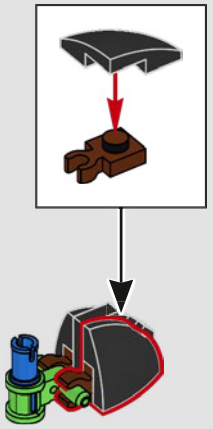

5

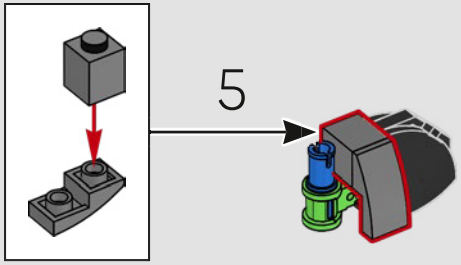

6

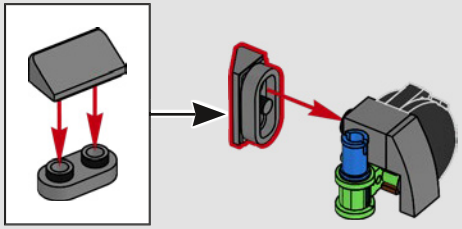

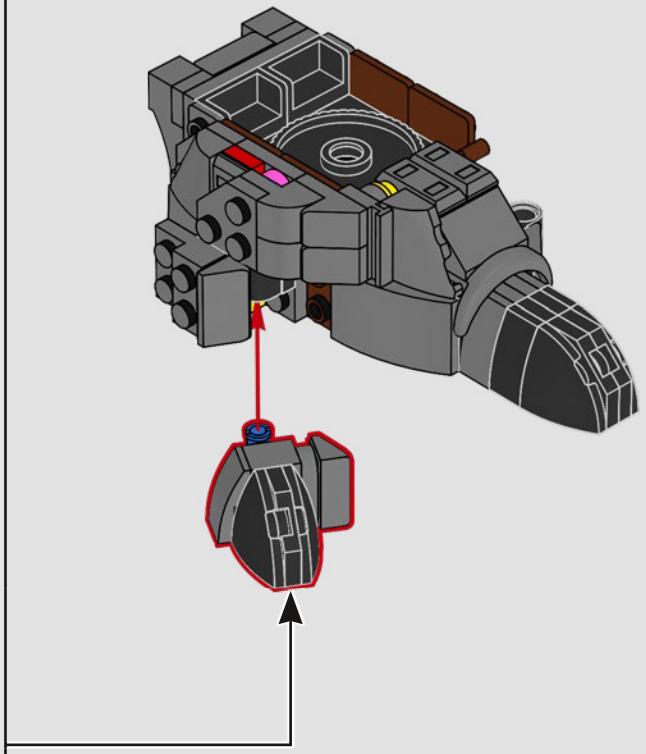

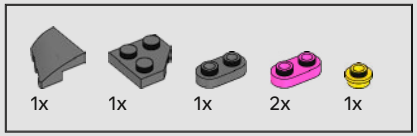


# 109

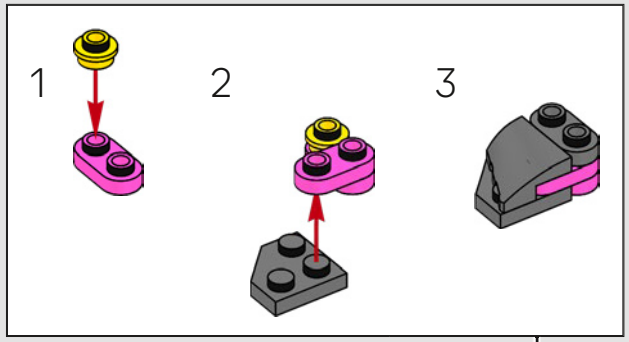




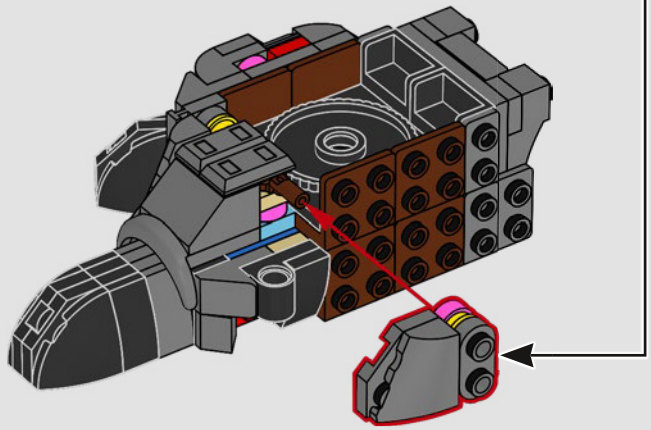

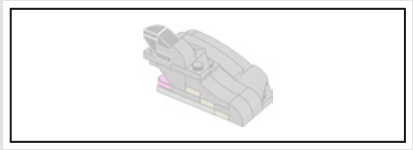

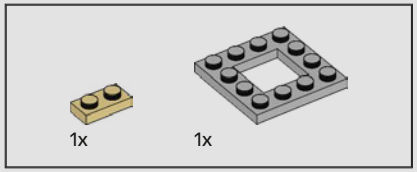


110

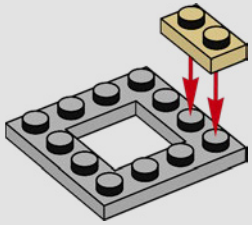

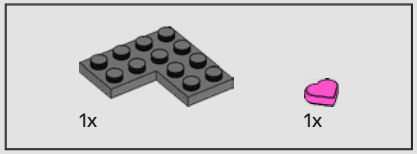


111

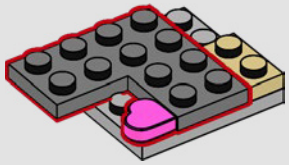




112

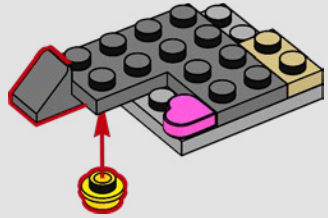

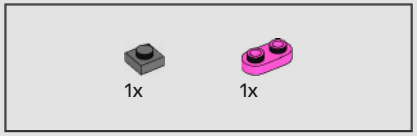


113

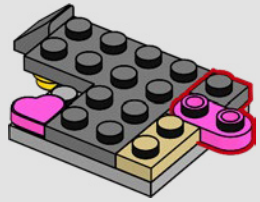

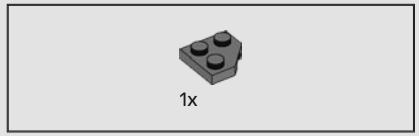


114

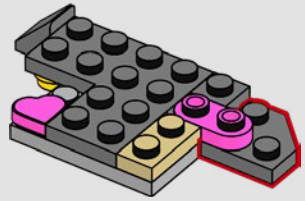

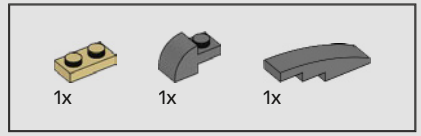


115

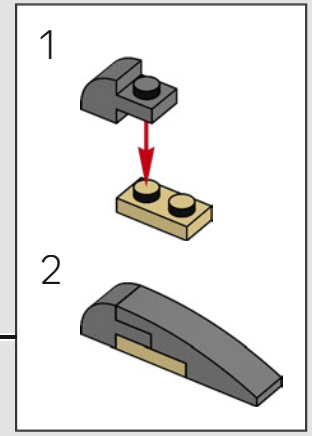


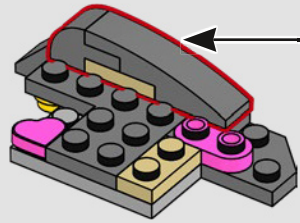

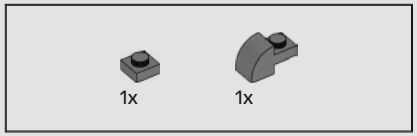


116

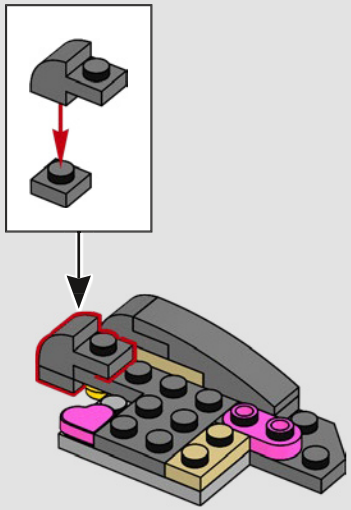

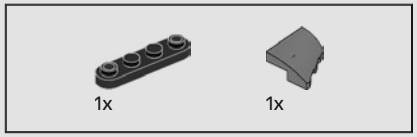


117

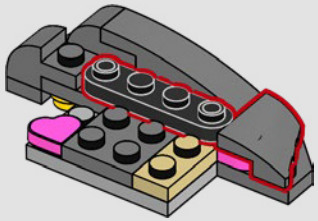

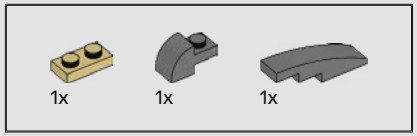


118

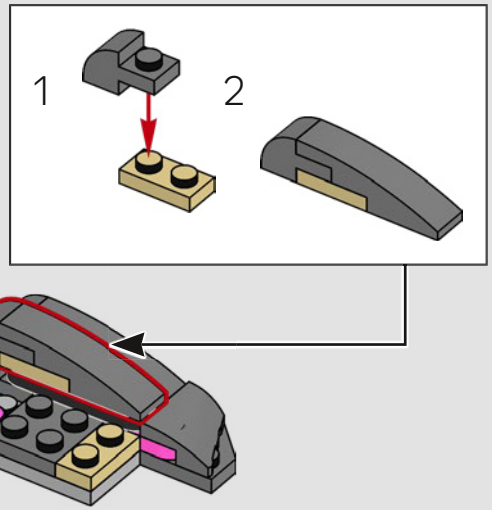


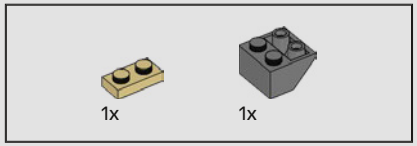


119

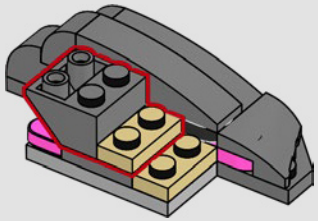

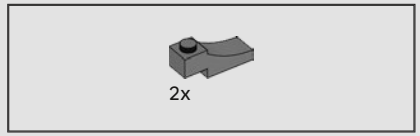


120

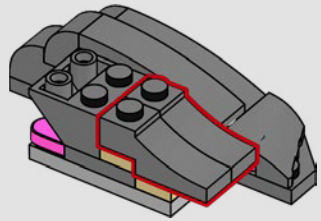

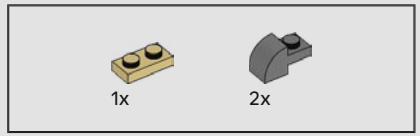


121

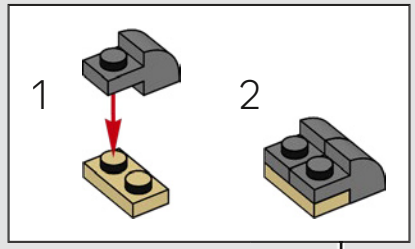


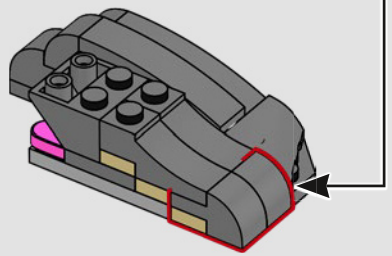

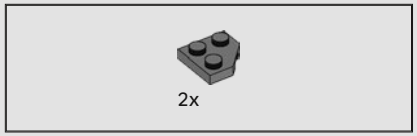


122

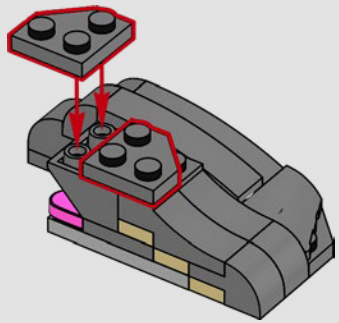

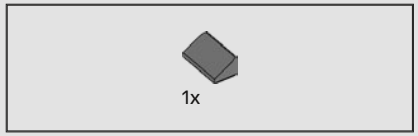


123

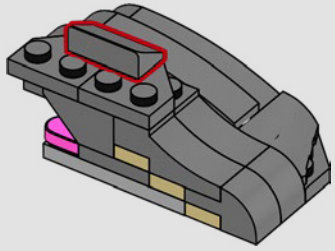

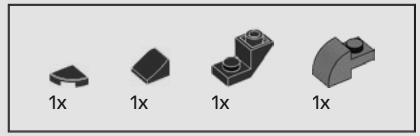


124

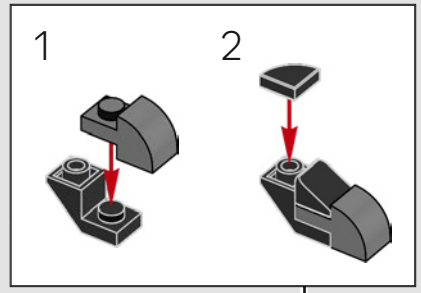


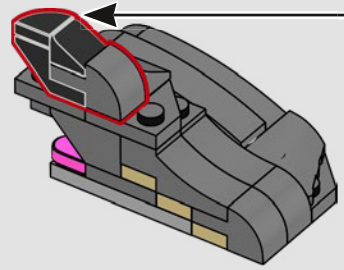

125

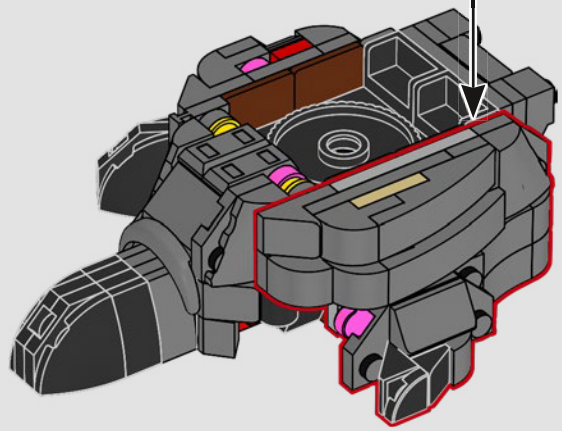

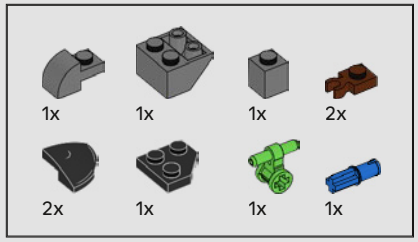


126

1

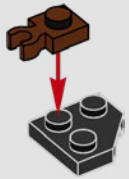

2



3

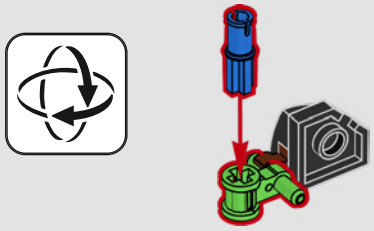

4

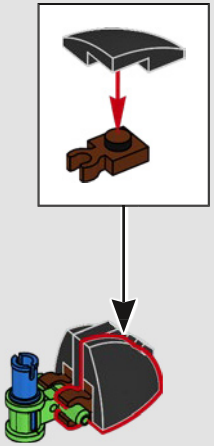

5

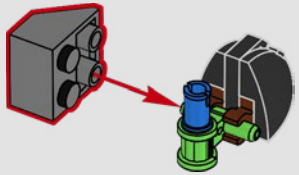

6

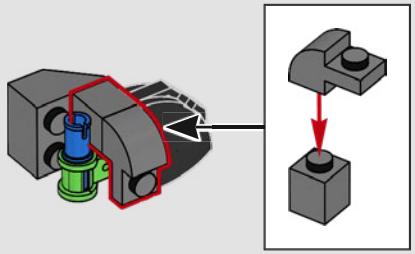

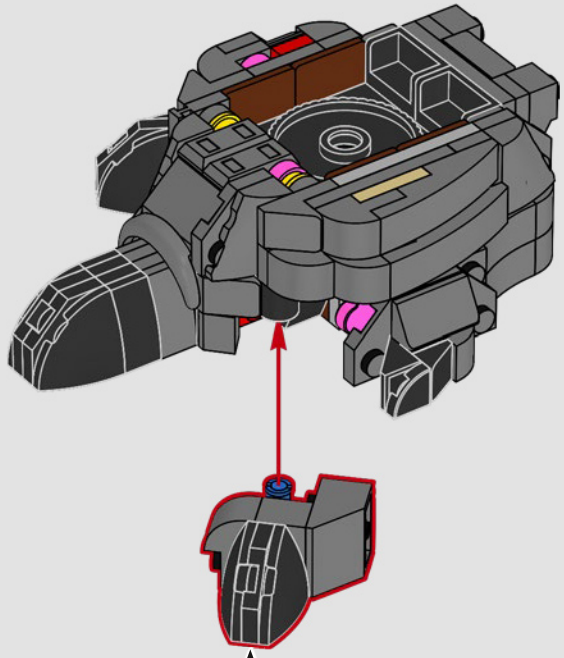




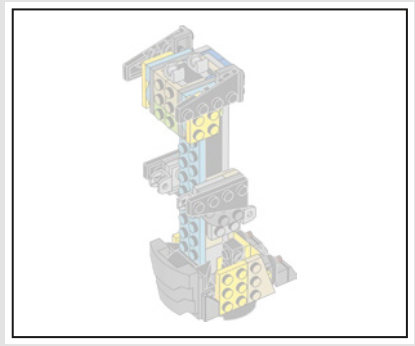

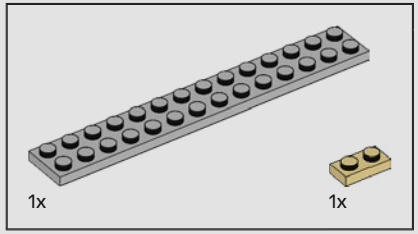


127

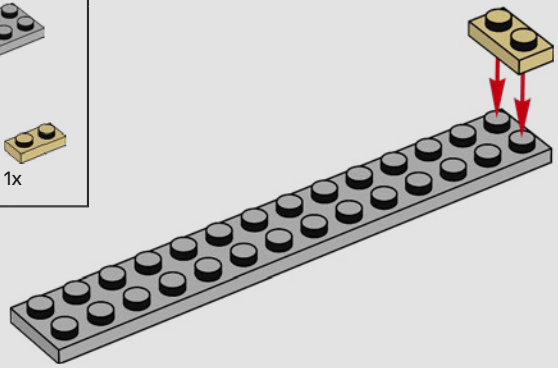




128

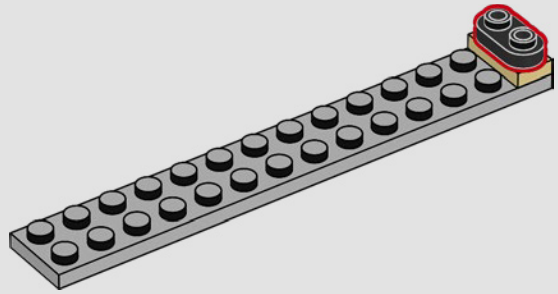

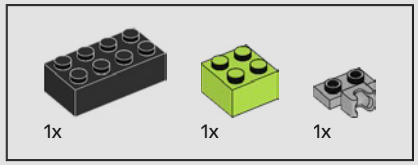


129

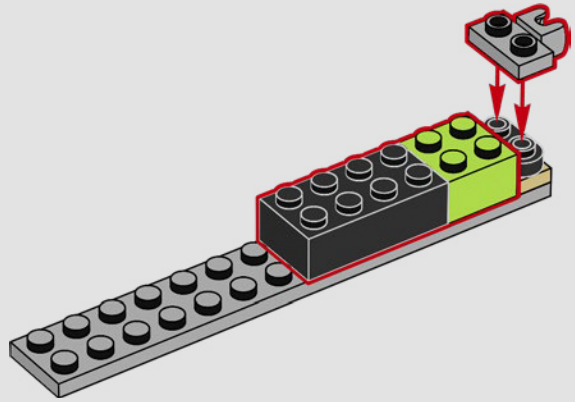

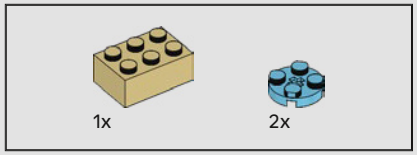


130

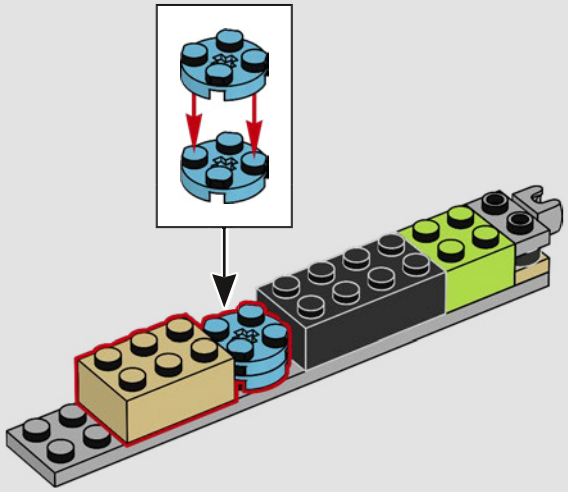

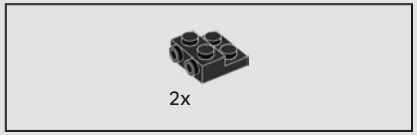


131

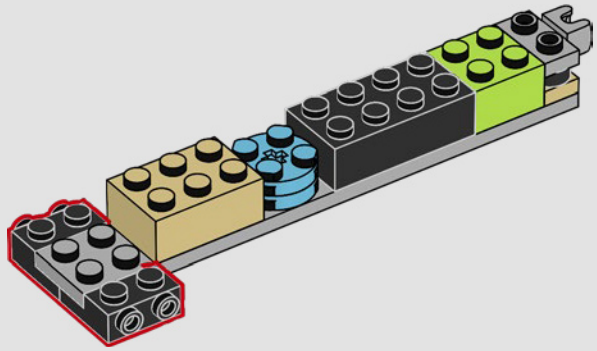




132

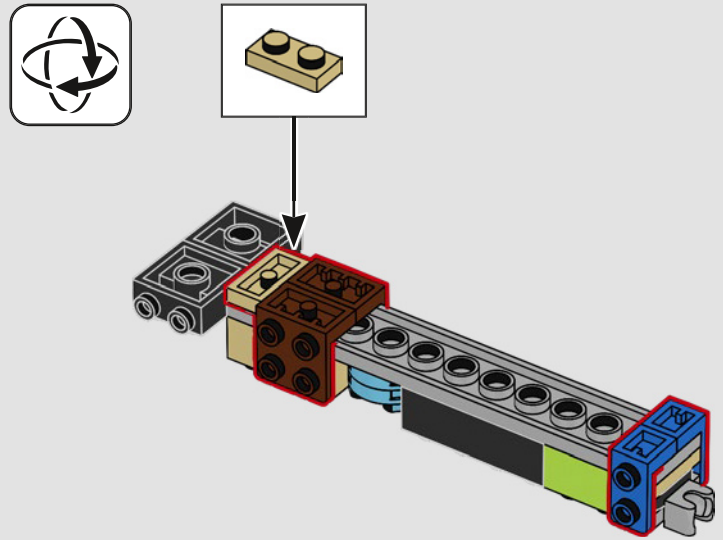

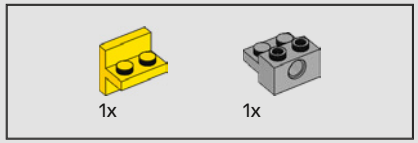


133



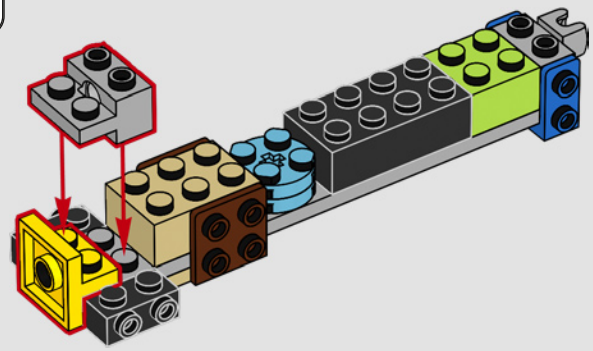

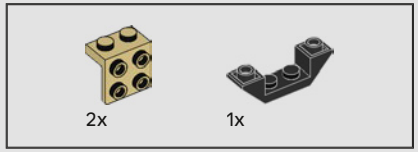


134

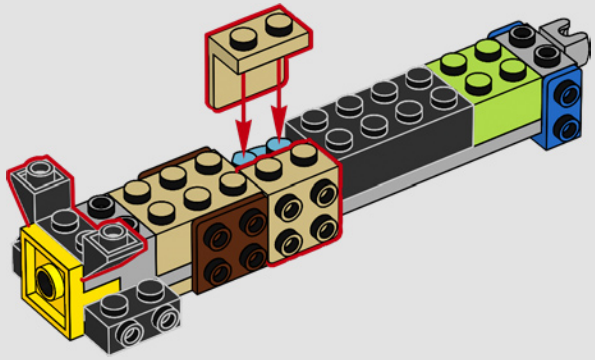

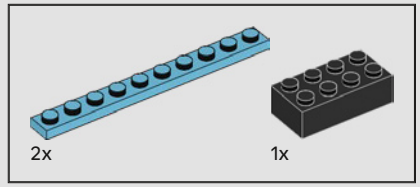


135

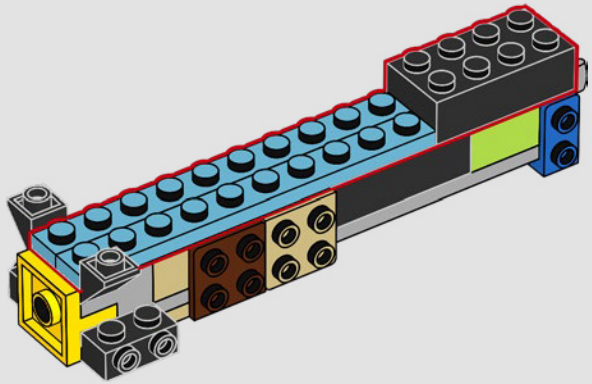

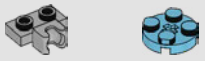


136

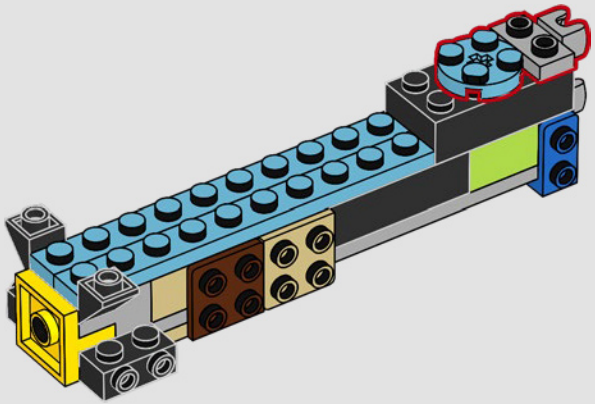




137

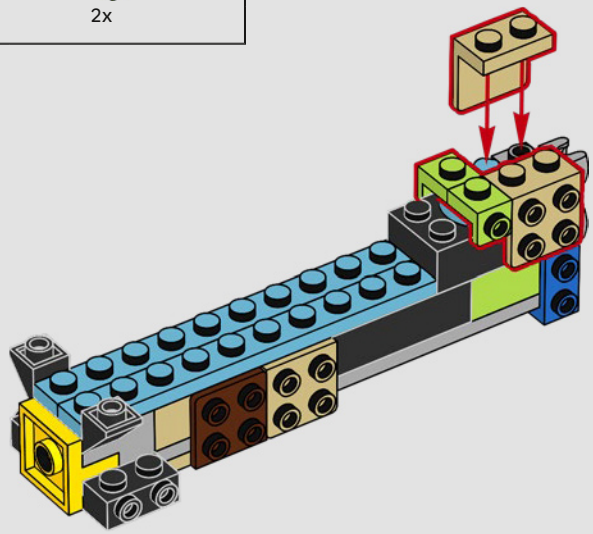




138

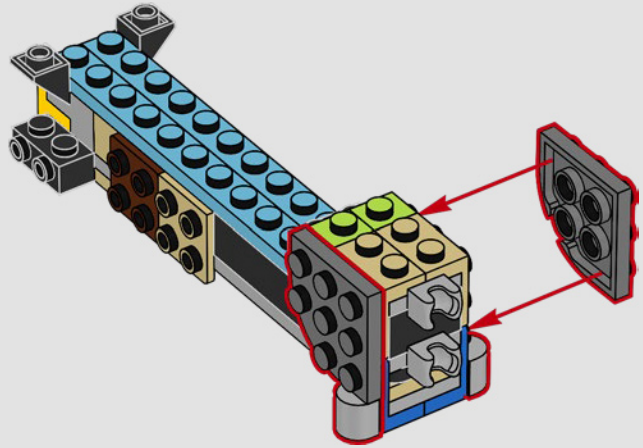

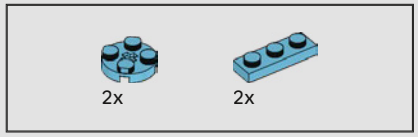


139

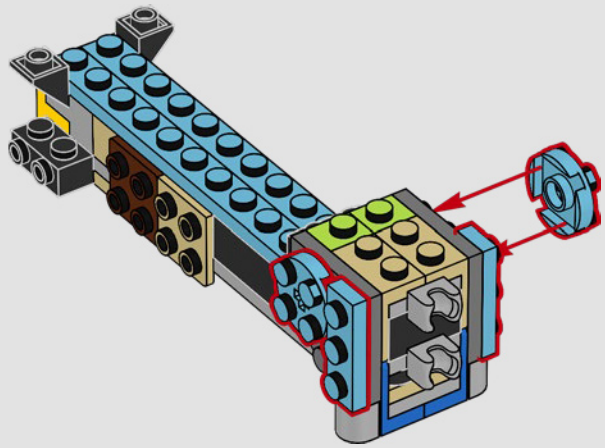

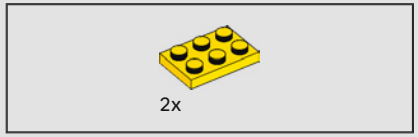


140

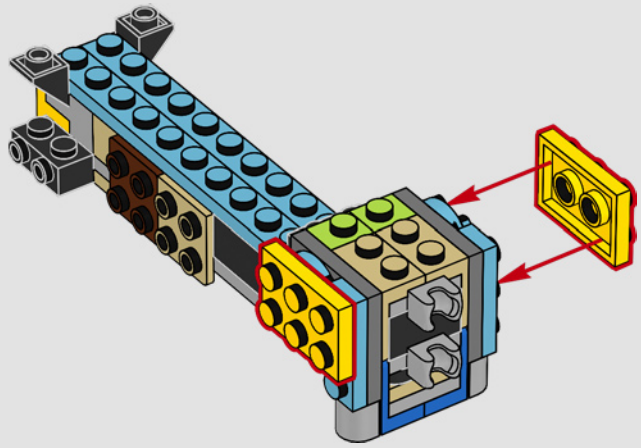

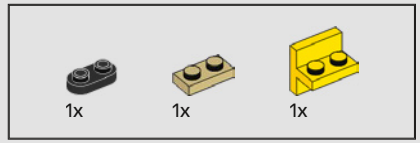


141

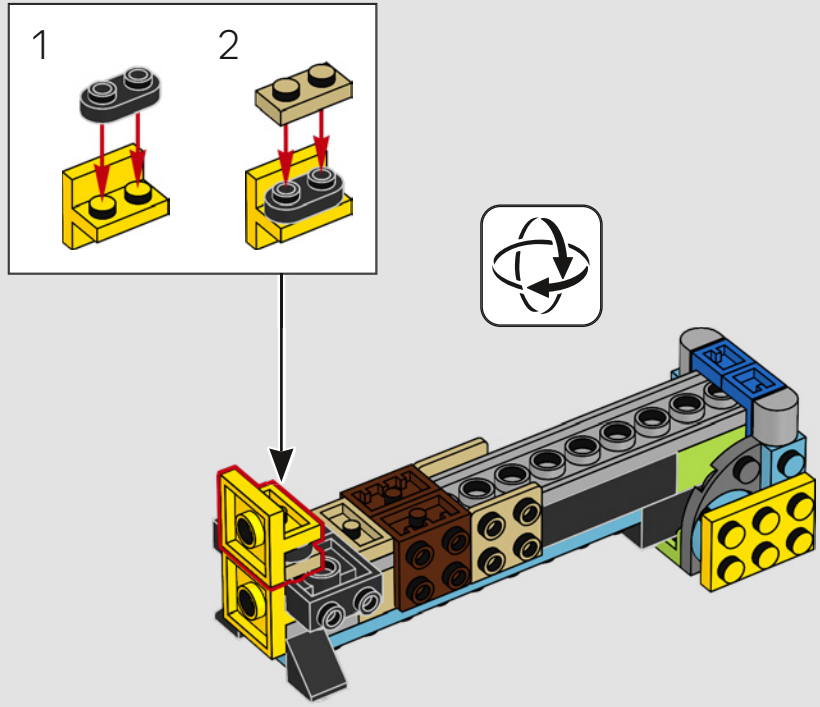

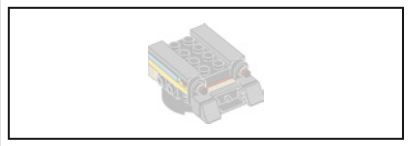

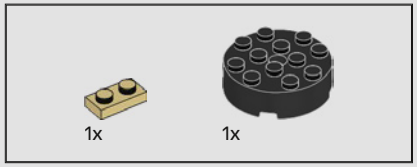


142

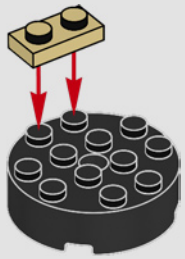




143

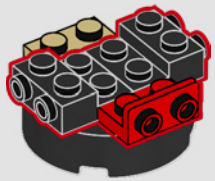

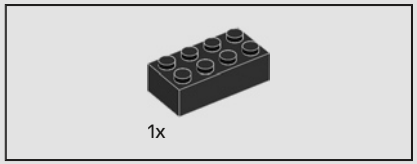


144

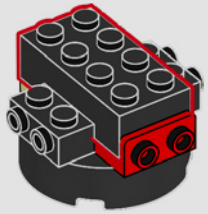

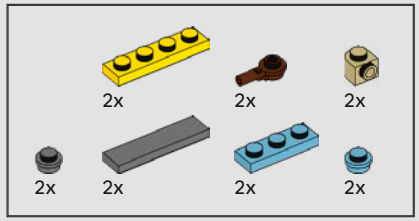


145

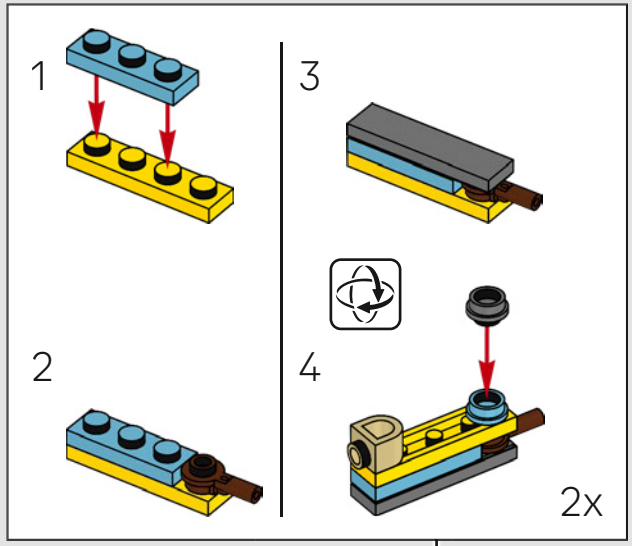


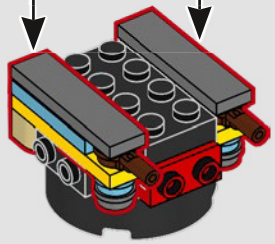

1x 1x

146

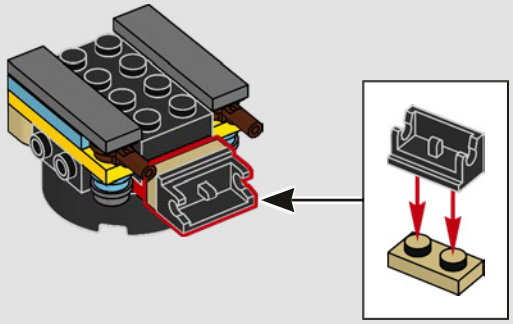

2x 2x 2x

147

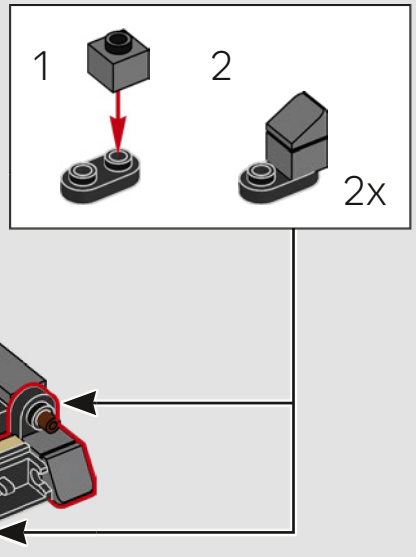


148

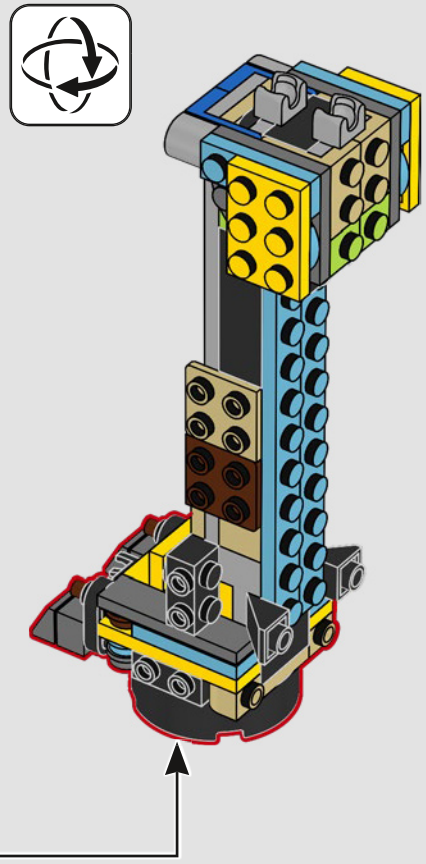

2x

149

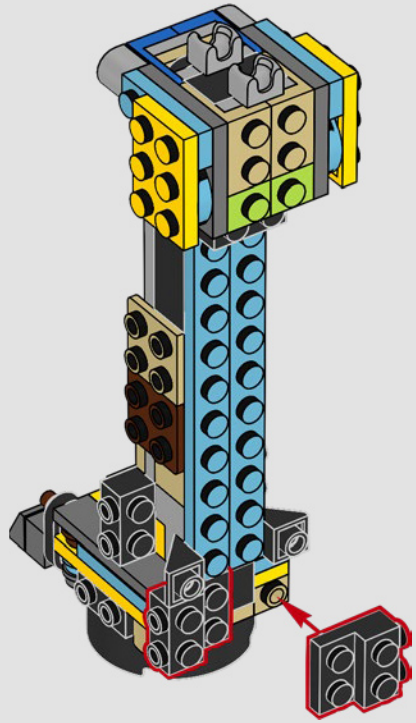




150

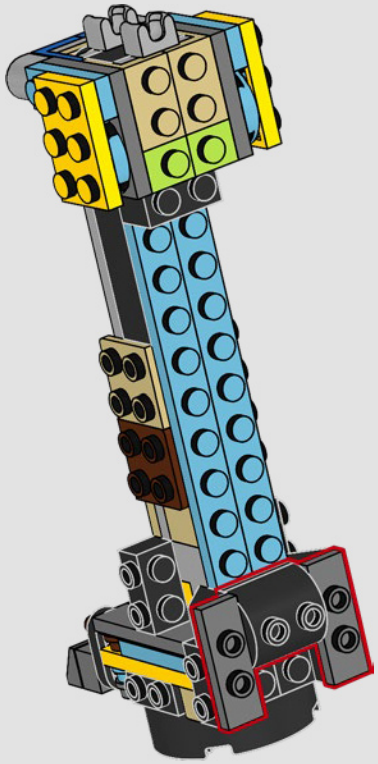

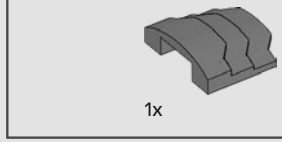


151

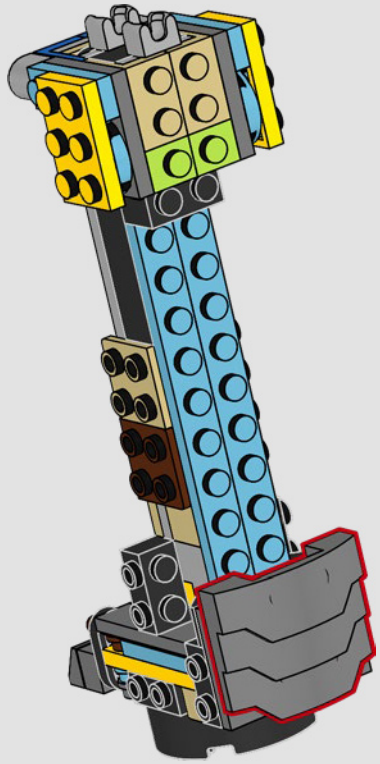

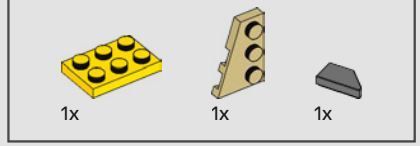


152

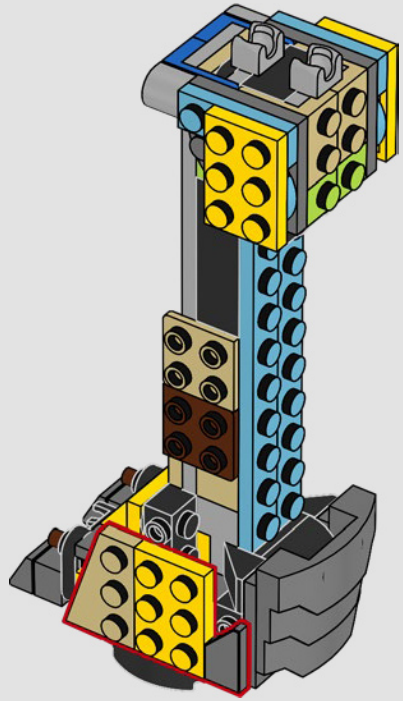

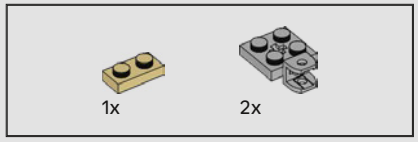


153

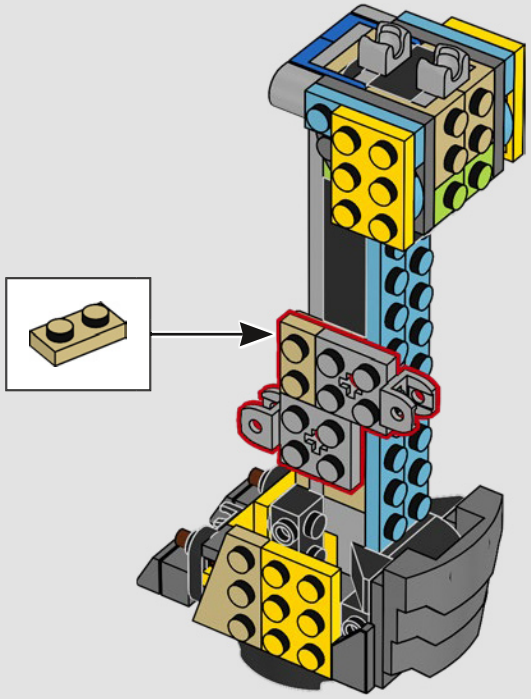

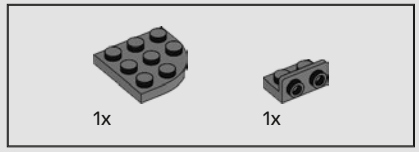


154

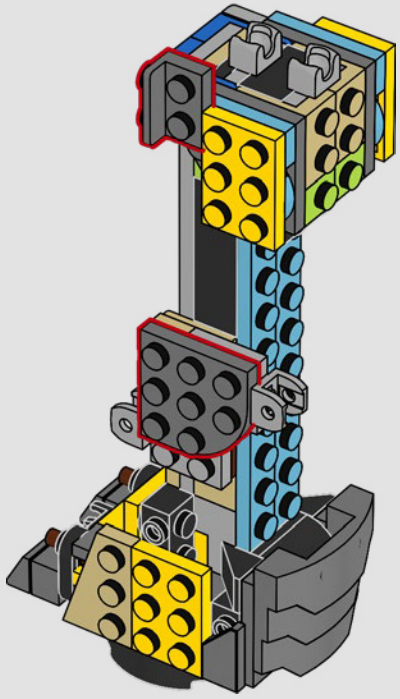

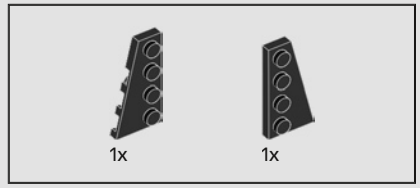


155

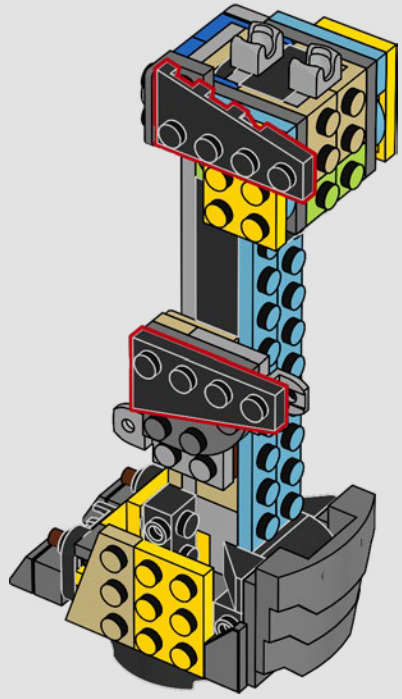

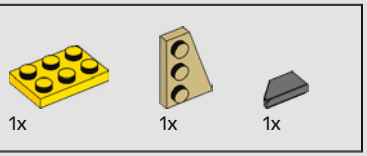


156



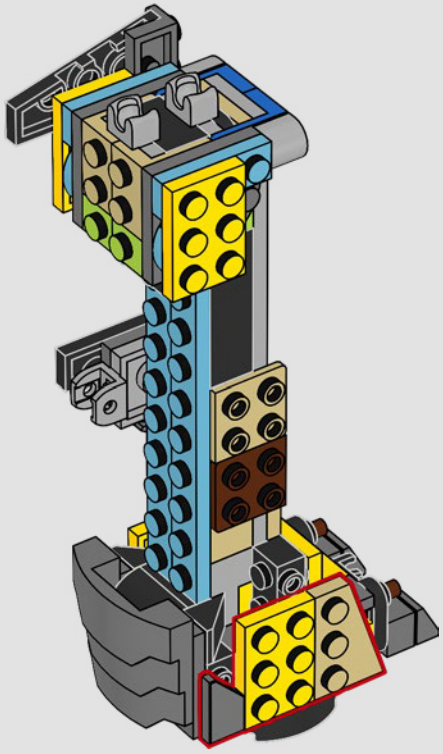

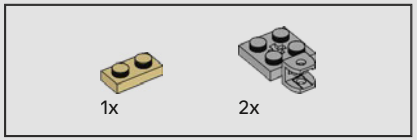


157

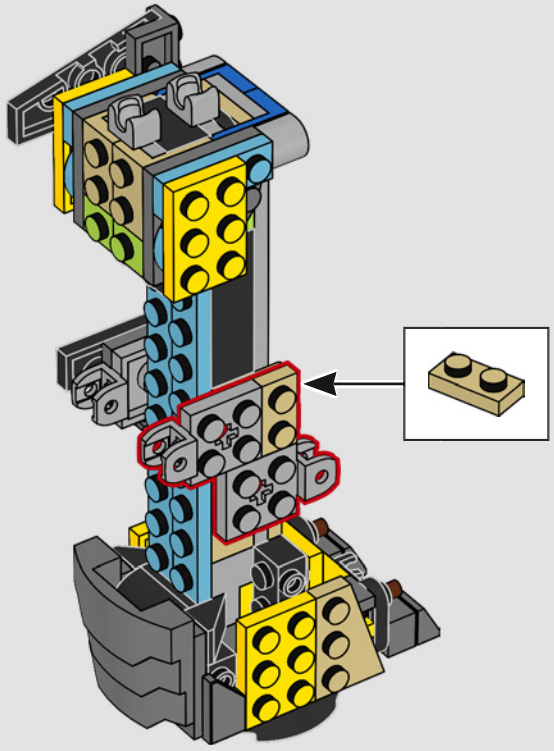

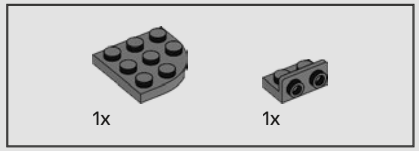


158

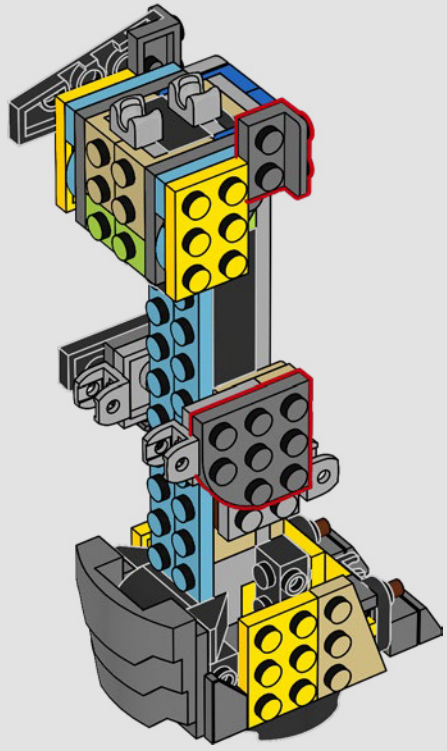

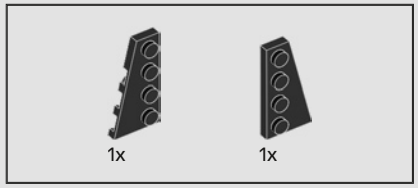


159

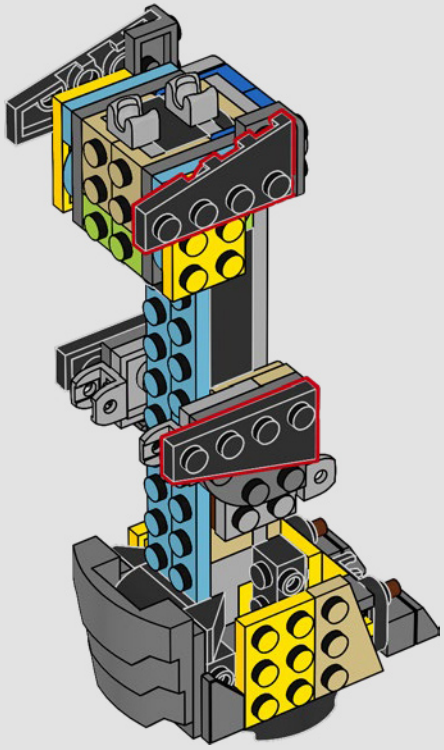

160

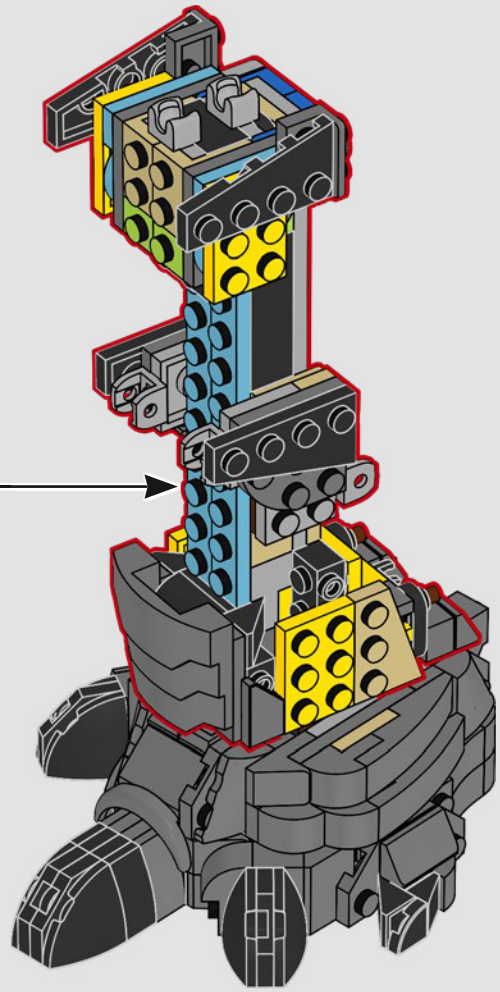

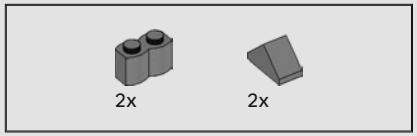


161

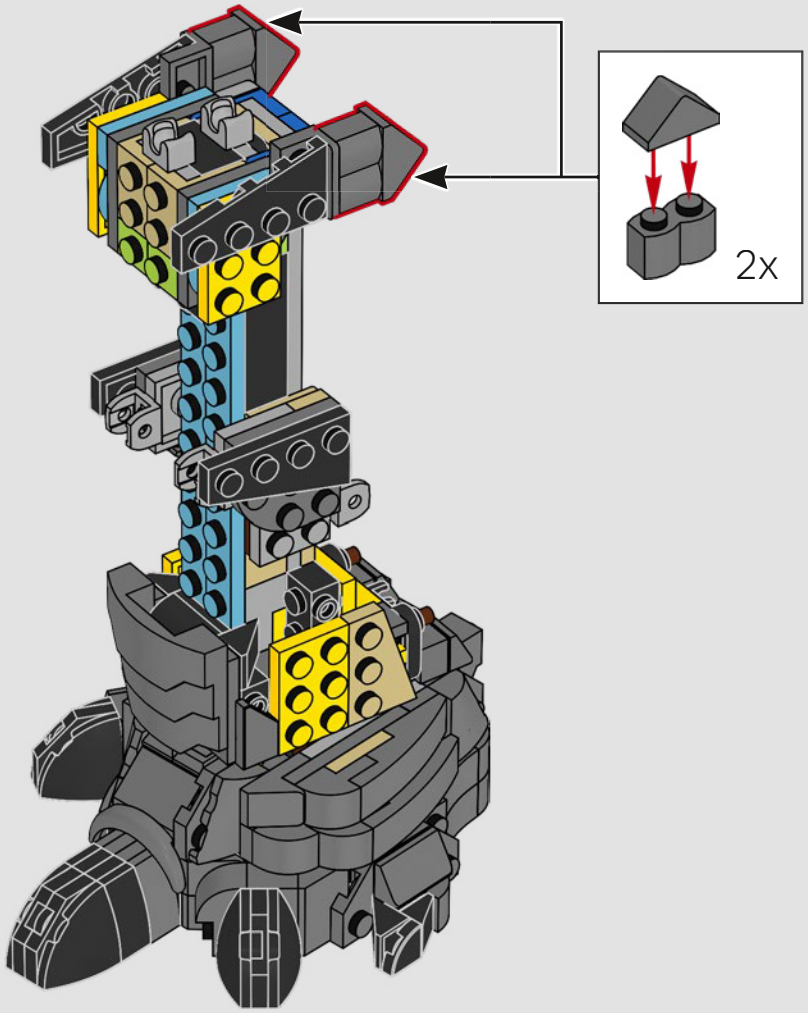




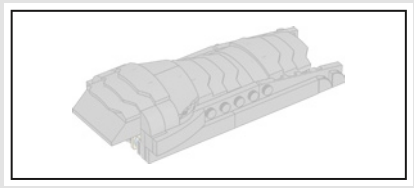

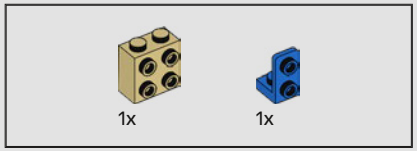


162

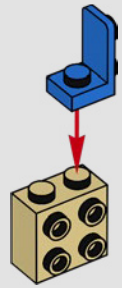

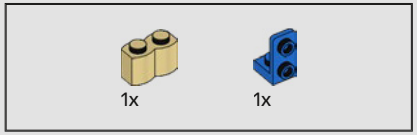


163

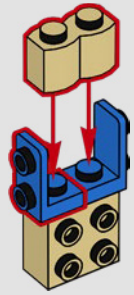

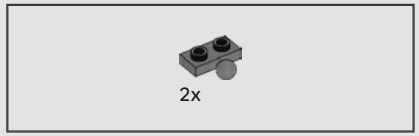


164

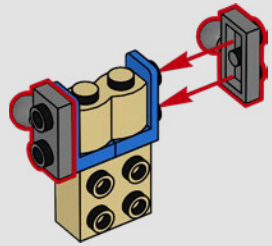

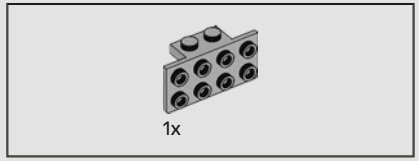


165

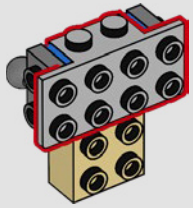

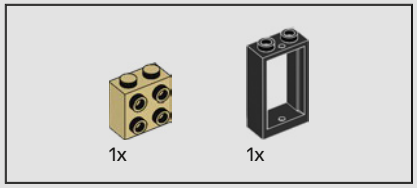


166

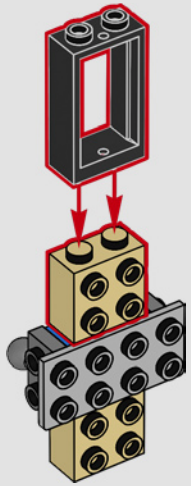

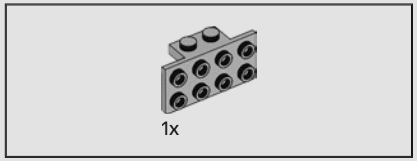


167

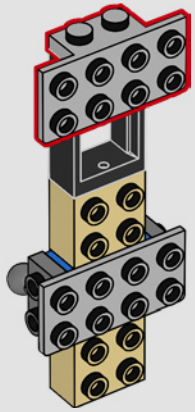




168

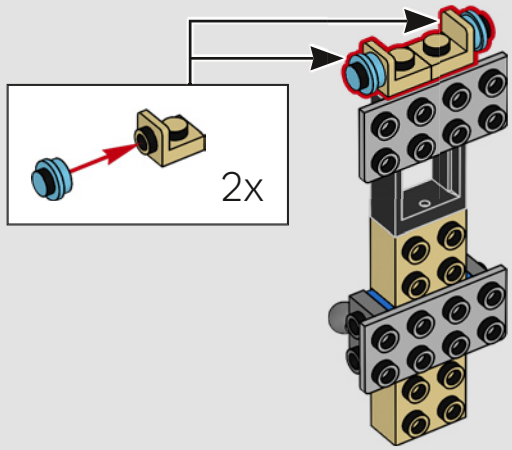





169

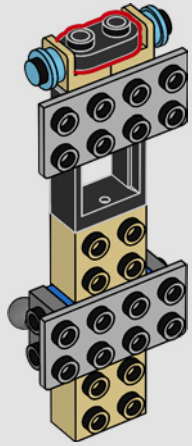




170

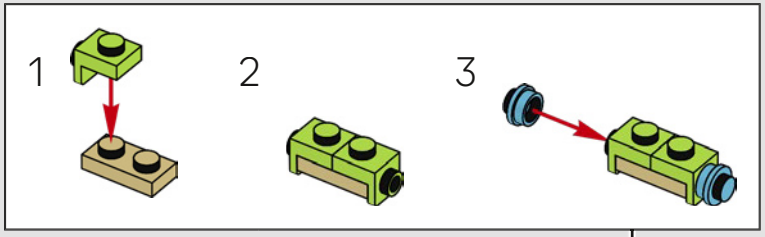




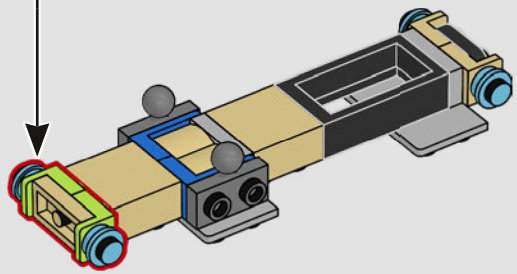

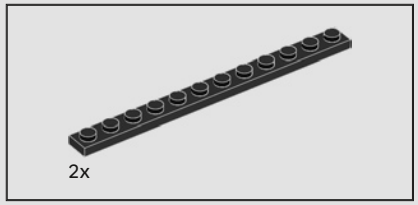


171

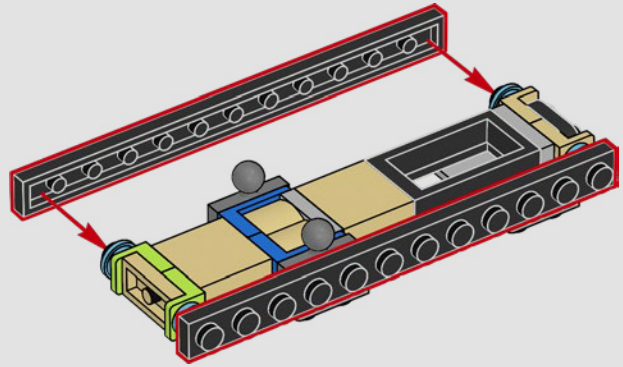

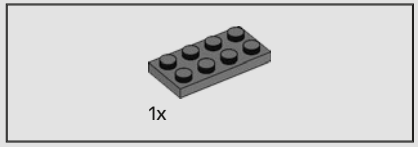


172



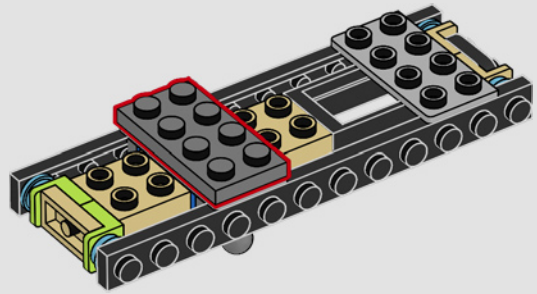

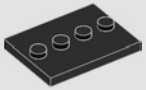
3x

173

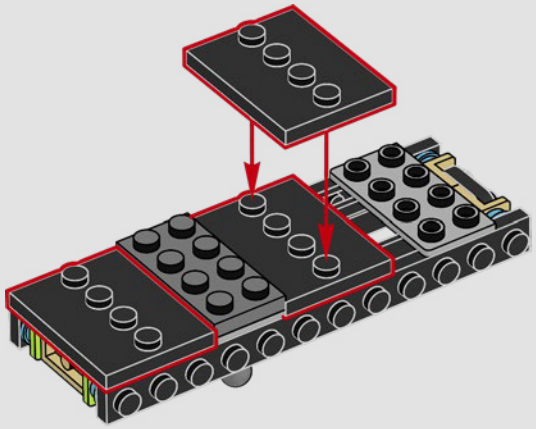


2x

174

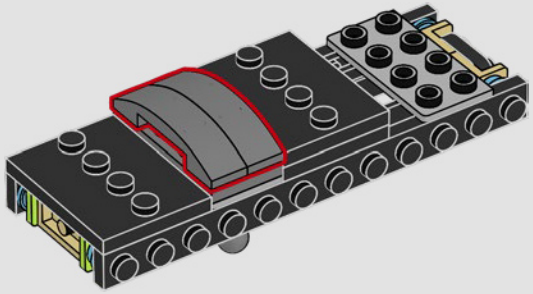

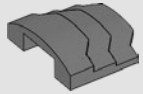
2x

175

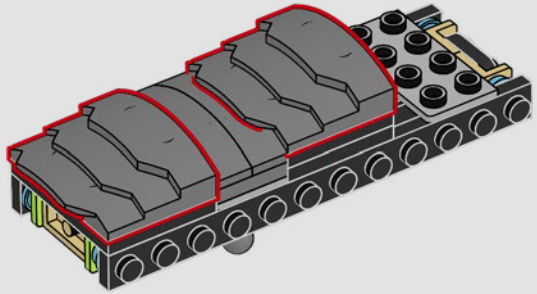

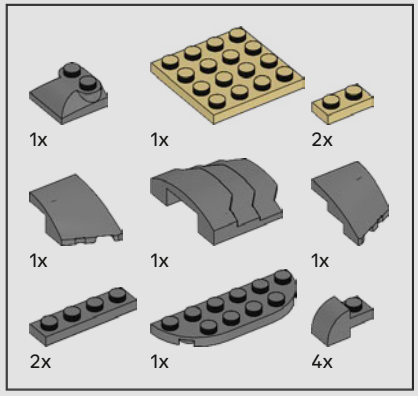


176

1

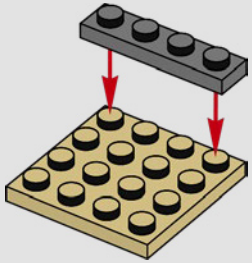

2

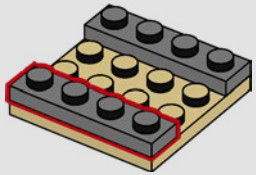

3

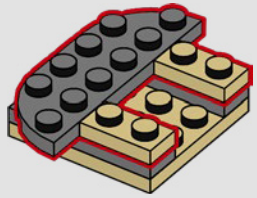

4

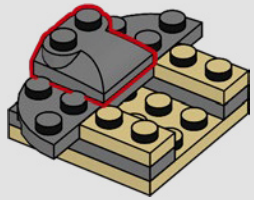

5

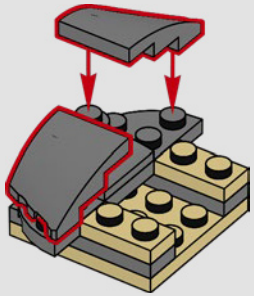

6

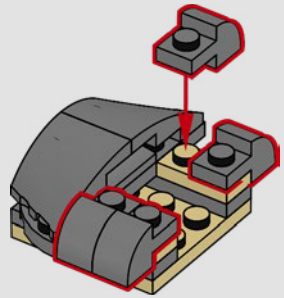

7

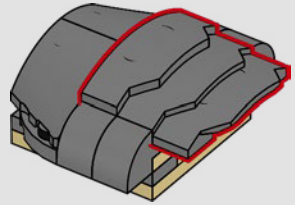

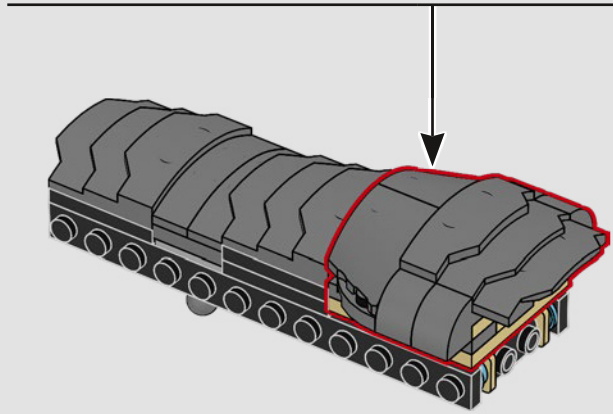

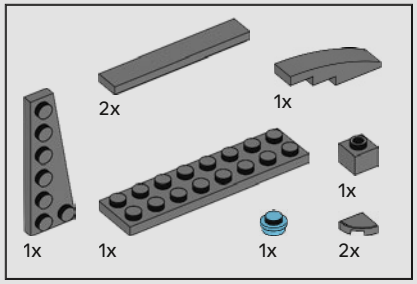


177

1

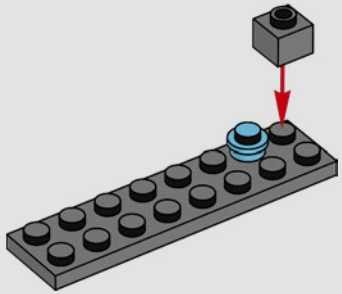

2

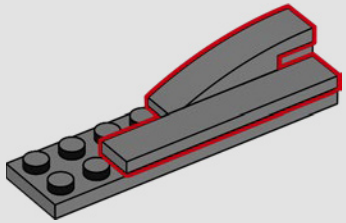

3

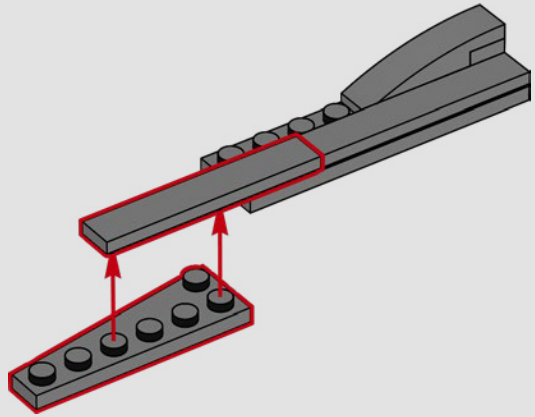

4

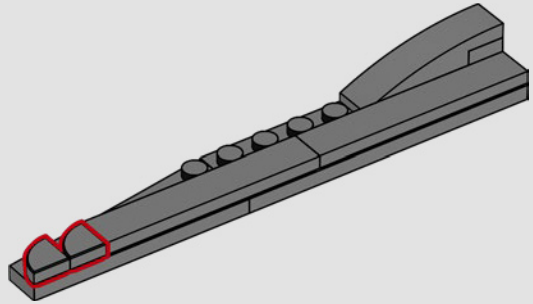

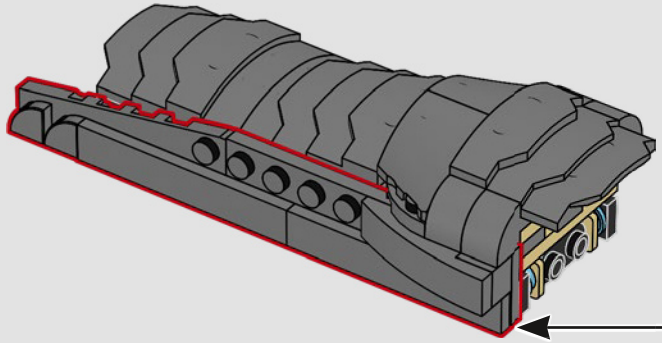

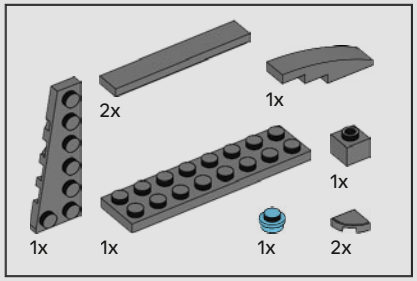


178

1

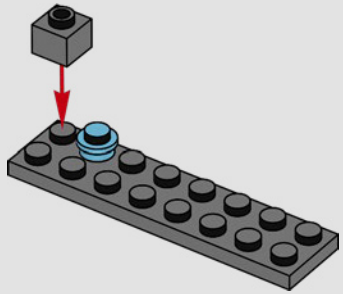

2

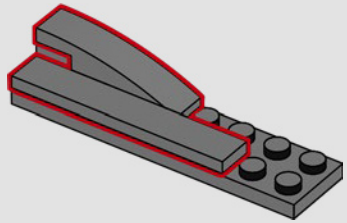

3

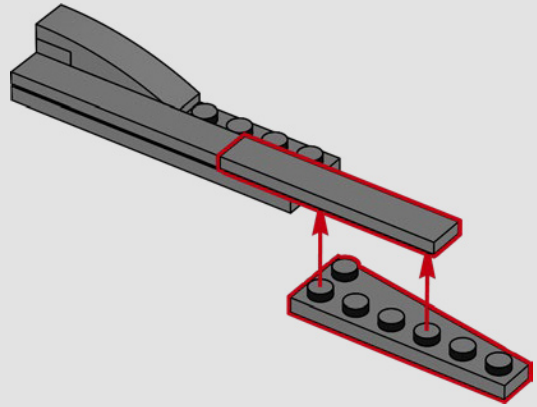

4

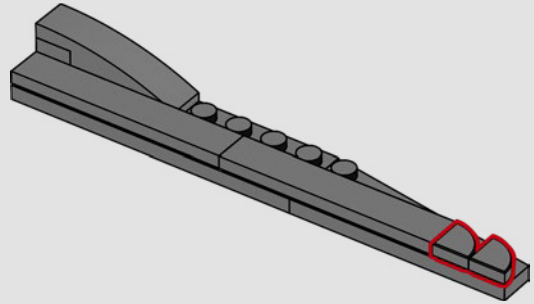



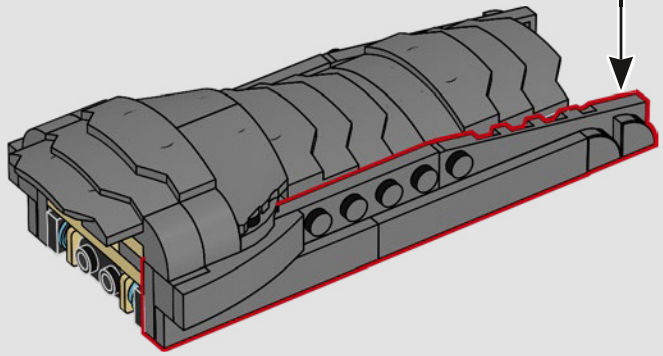

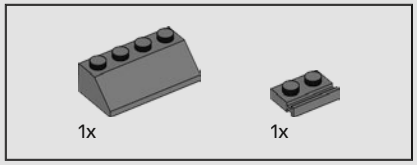


179

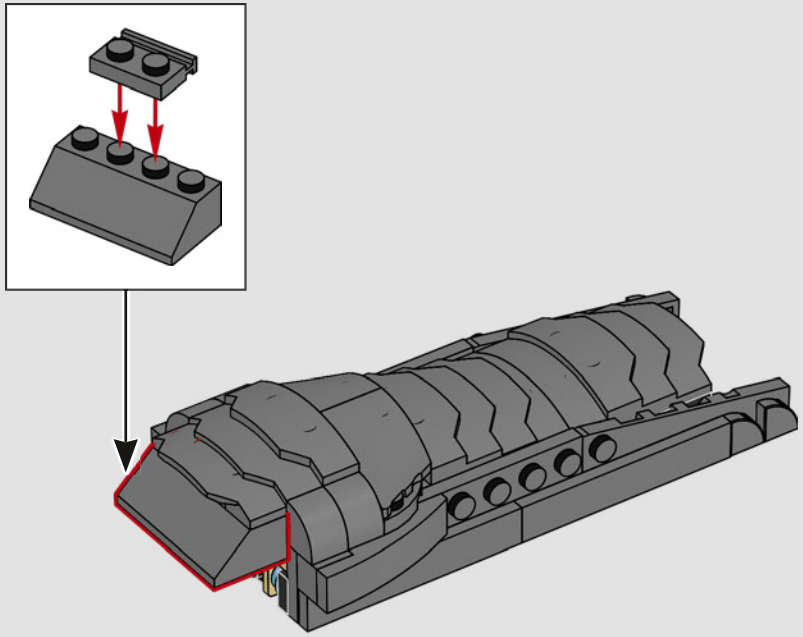

180

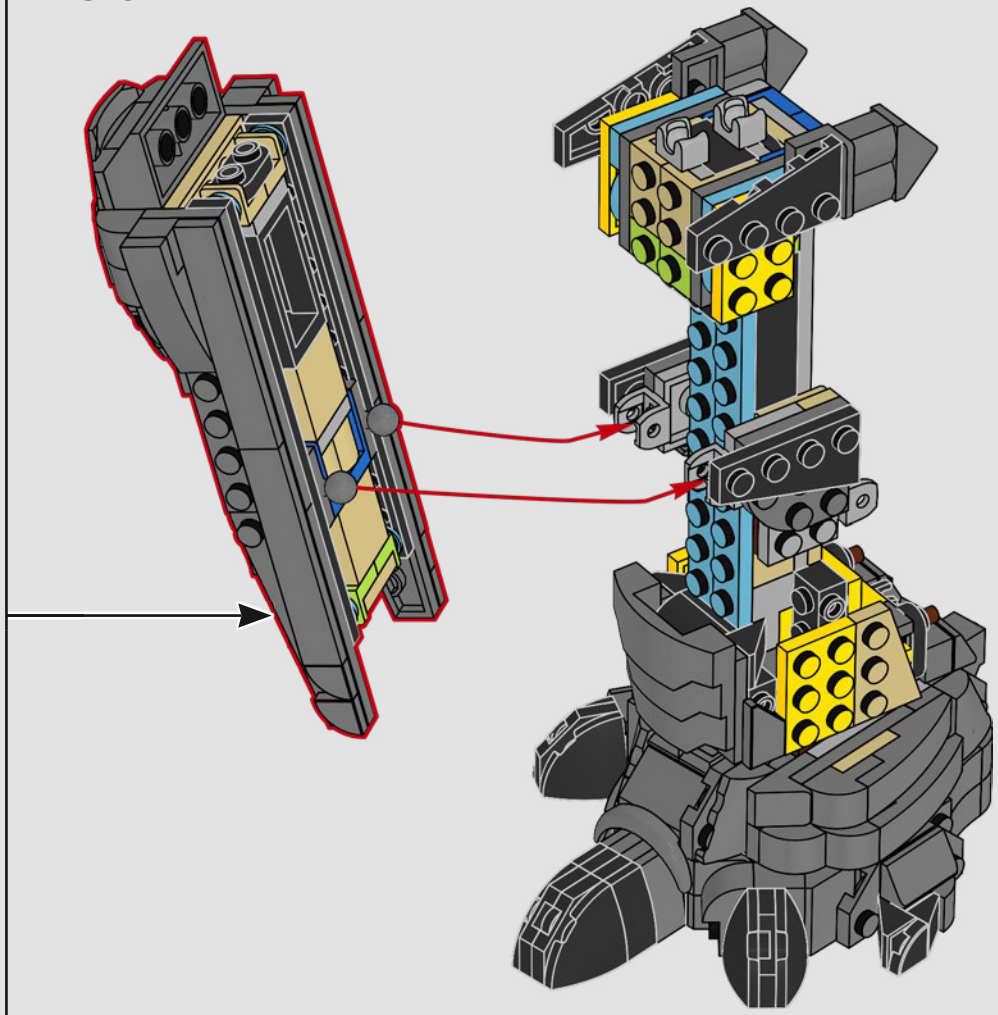

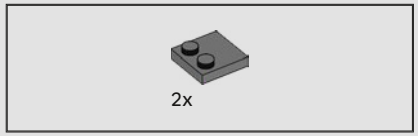


181

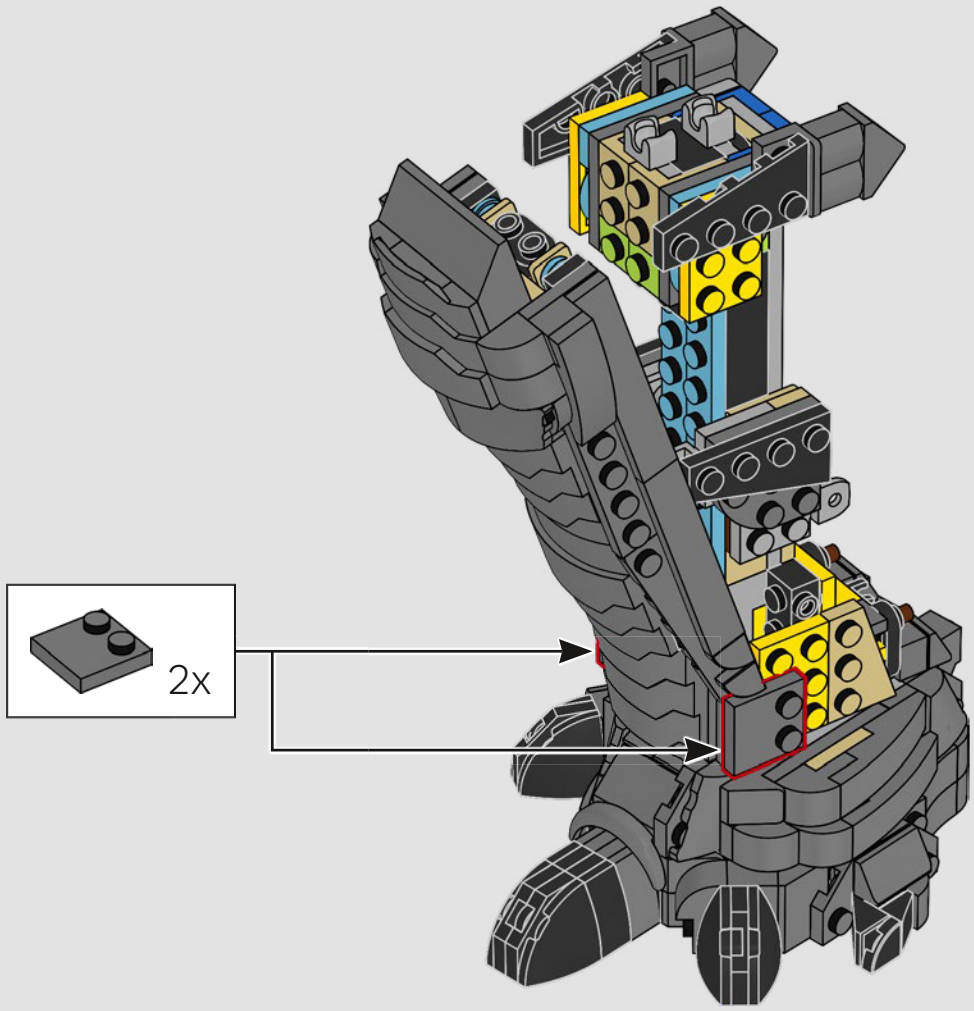

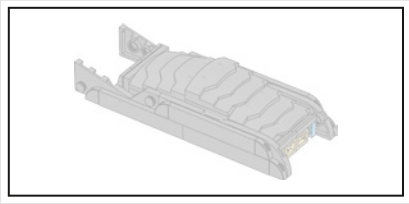

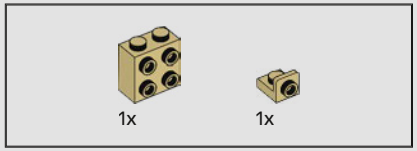


182

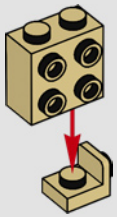

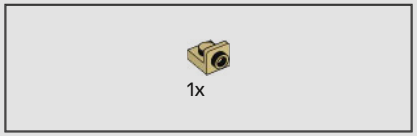


183

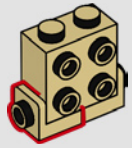

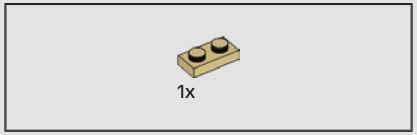


184

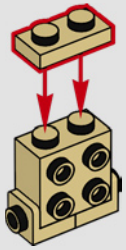

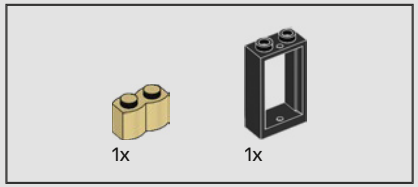


185



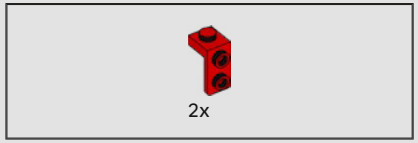


186

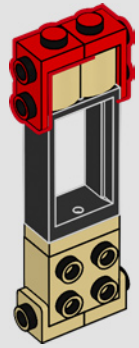




187






188

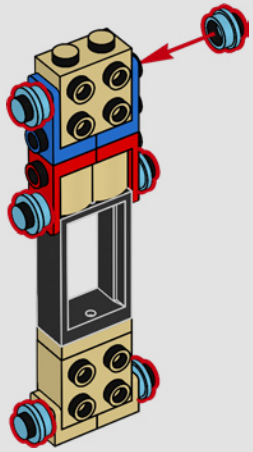




189

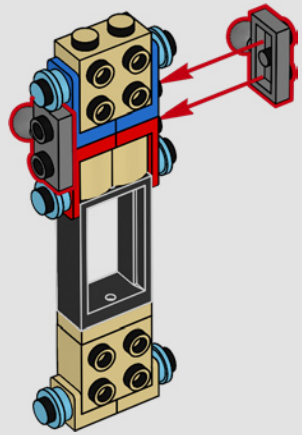

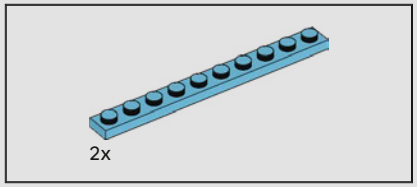


190

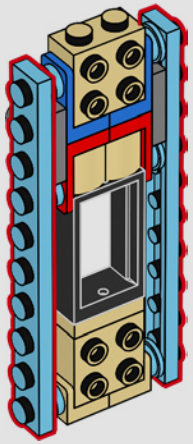

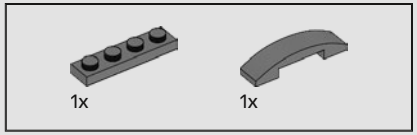


191

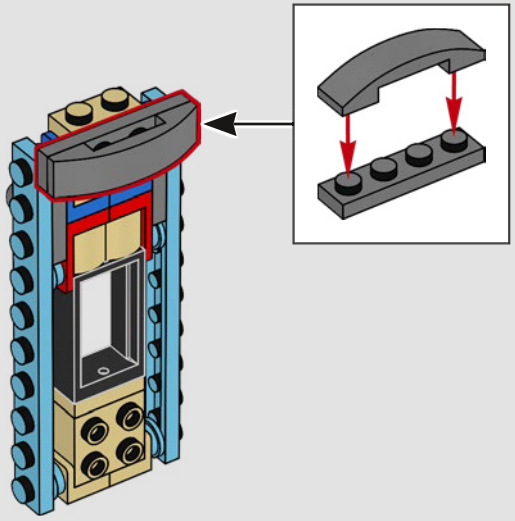

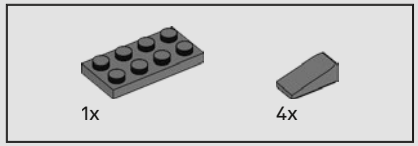


192

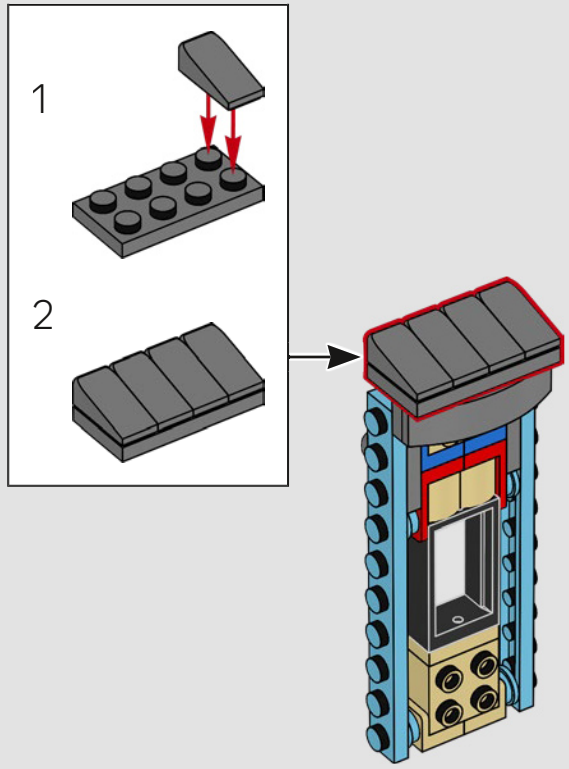

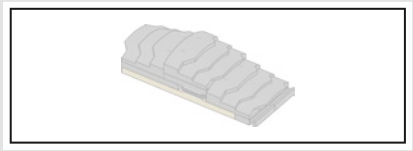

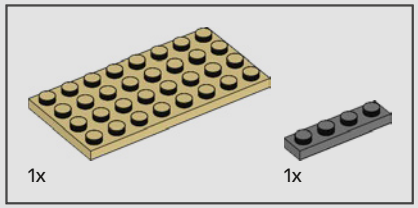


193

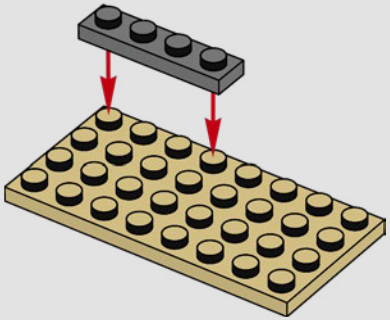

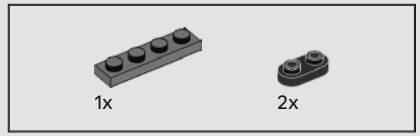


194

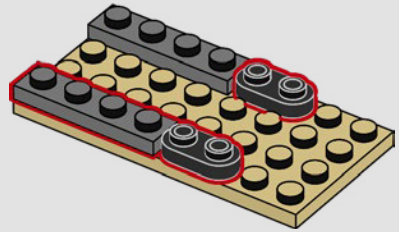

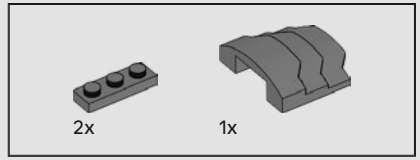


195

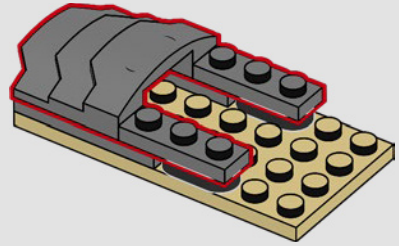

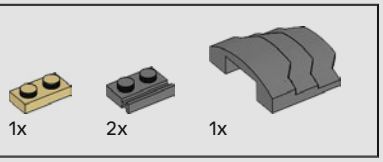


196

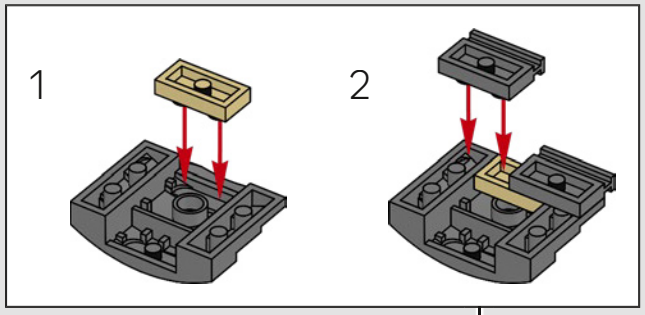


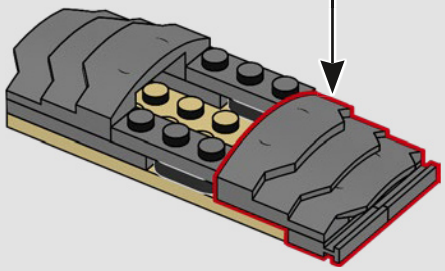

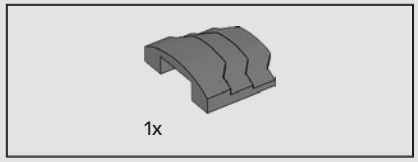


197

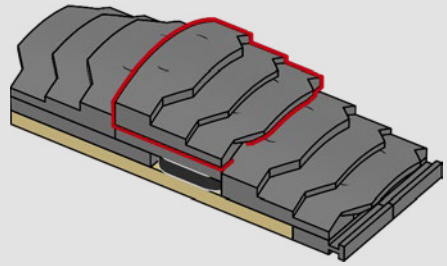

198



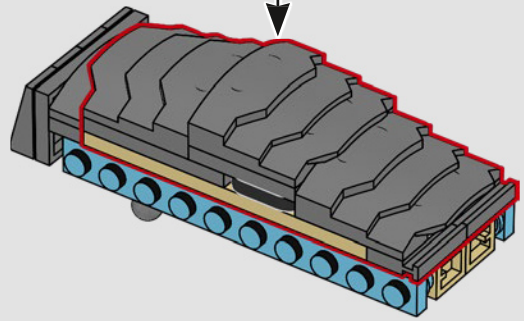

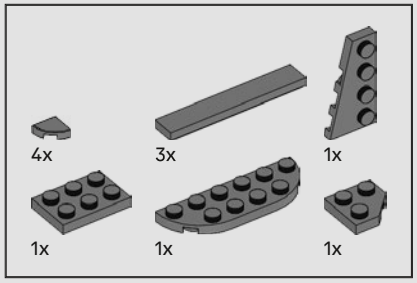


199

1

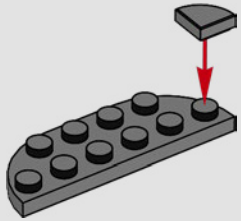

2

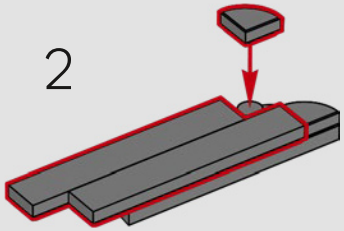

3

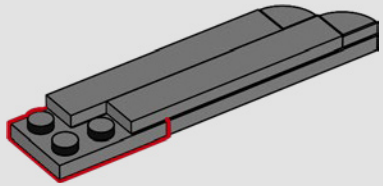

4

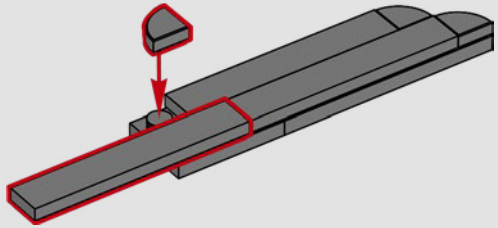

5

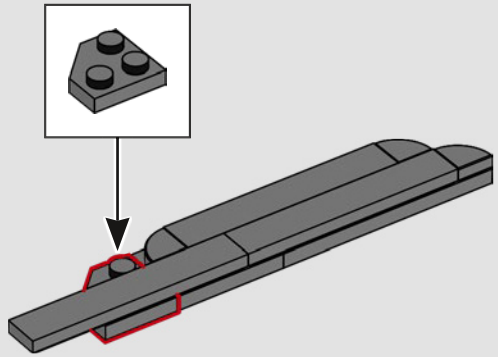

6

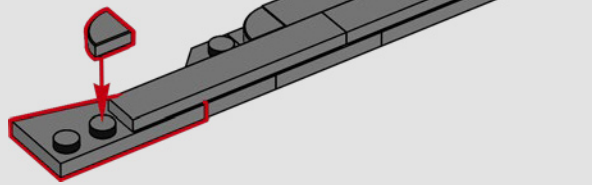

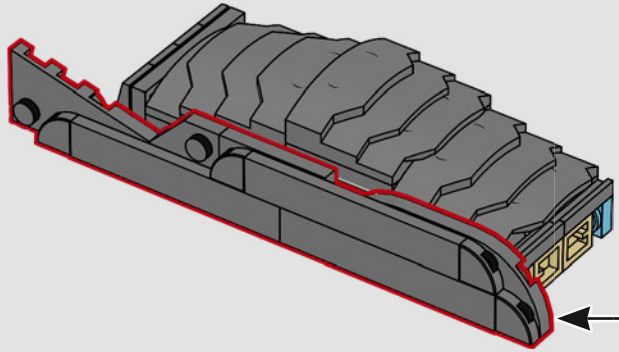

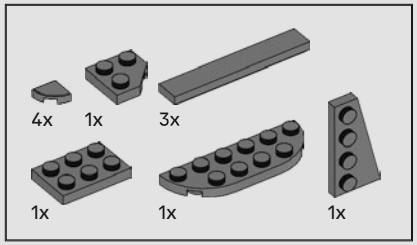


200

1

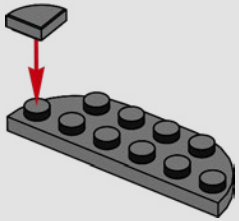

2

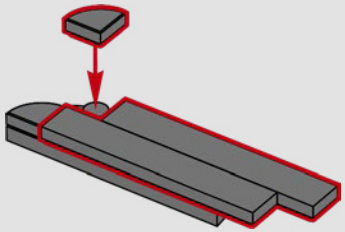

3

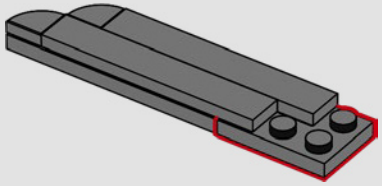

4

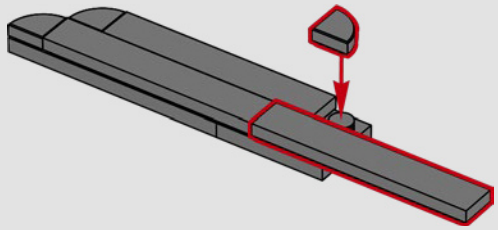

5

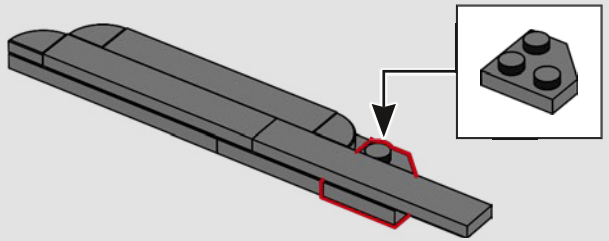

6

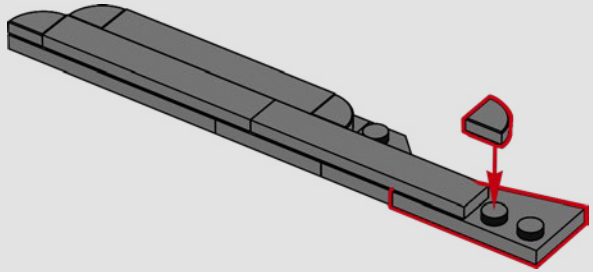

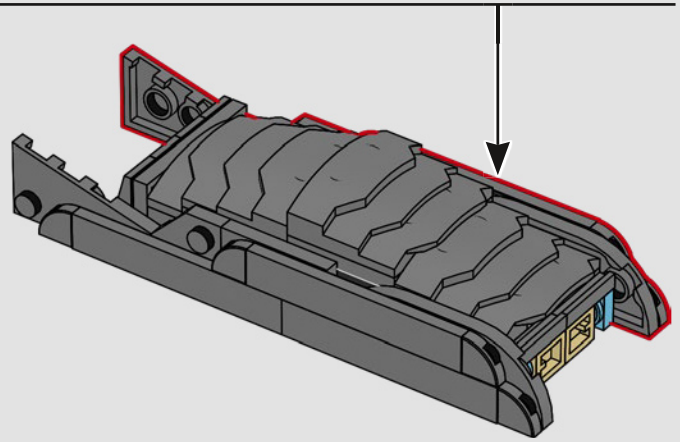

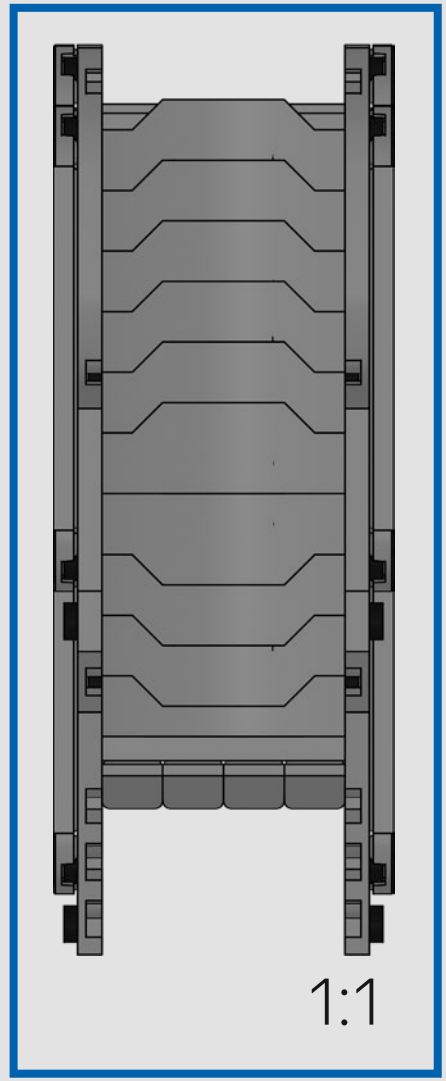

1:1

201

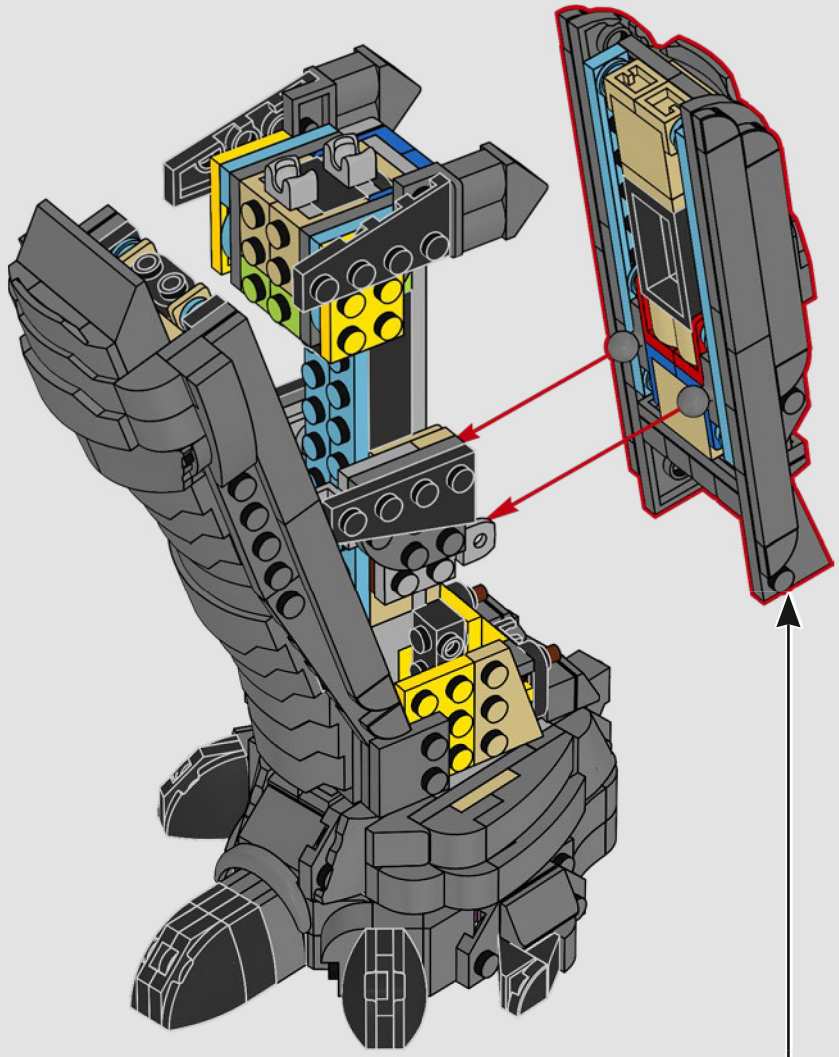

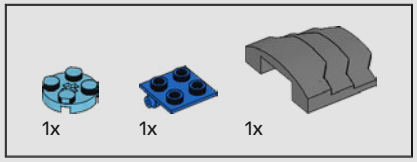


202

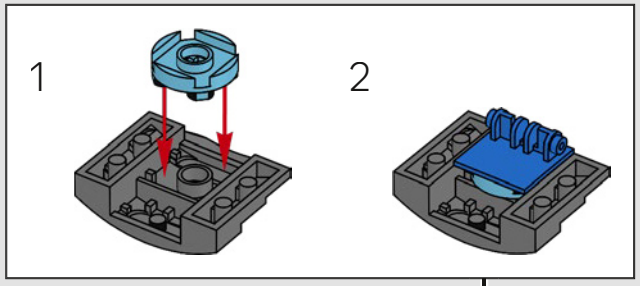


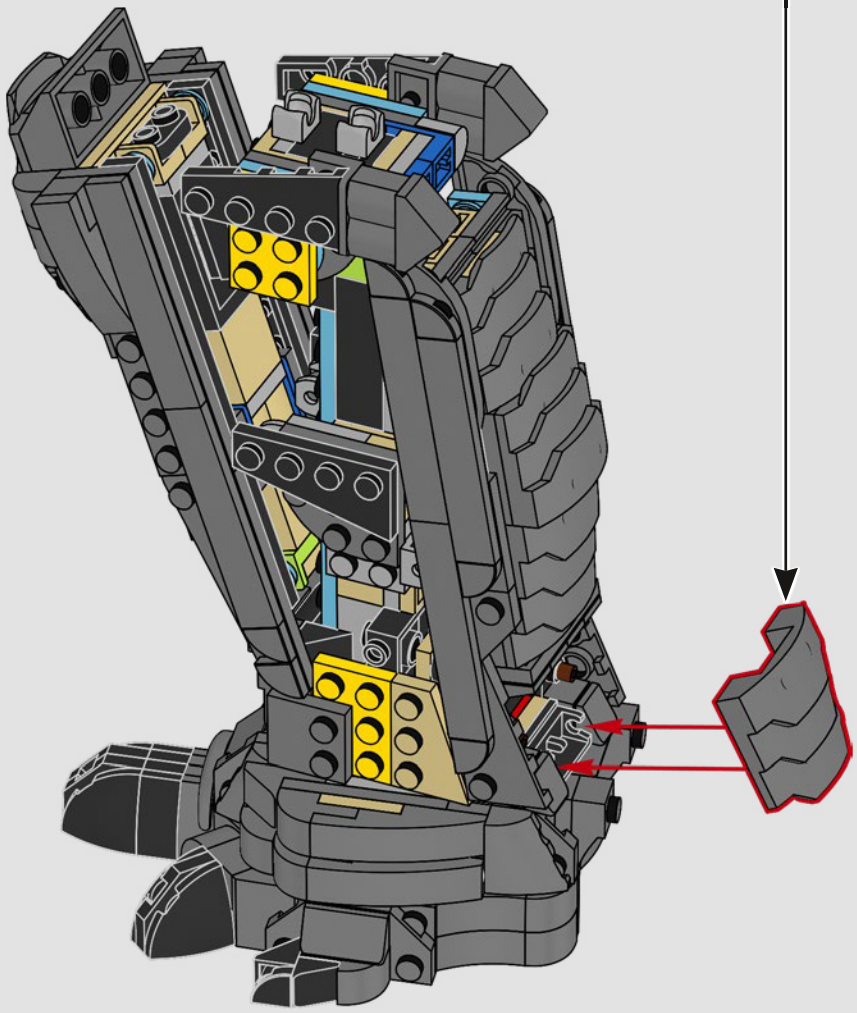




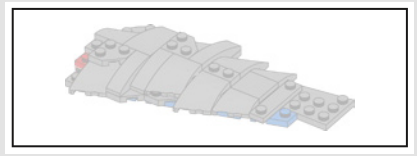

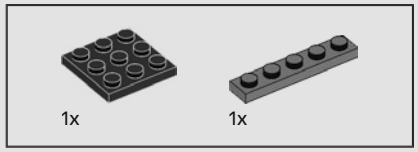


203

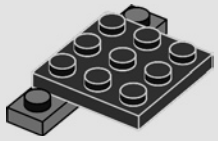

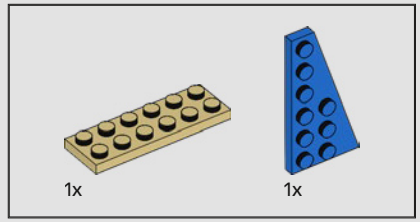


204

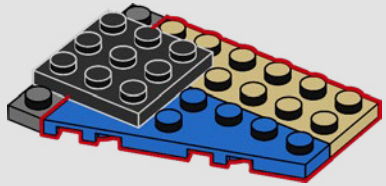

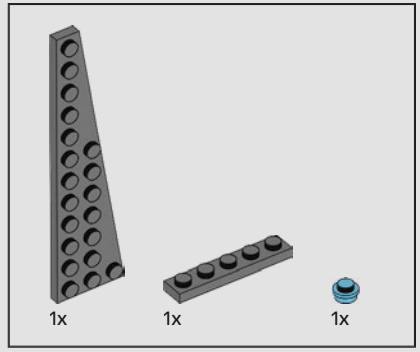


205

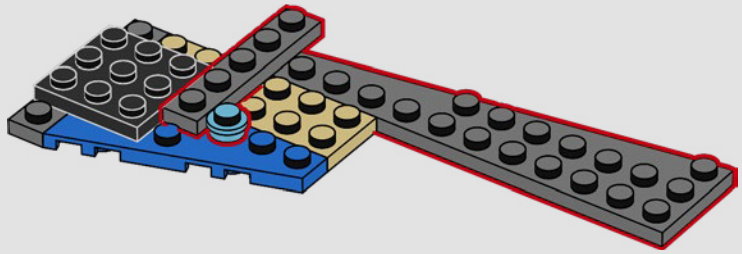

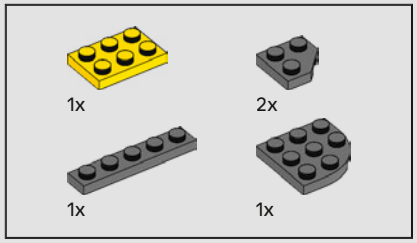


206

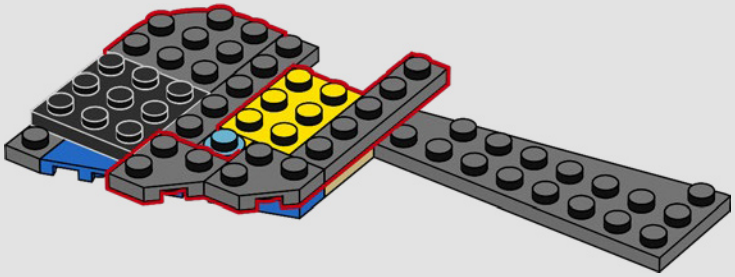

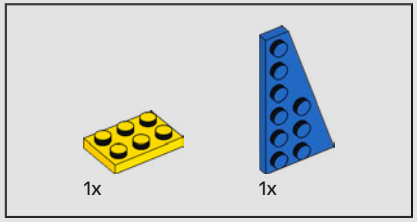


207

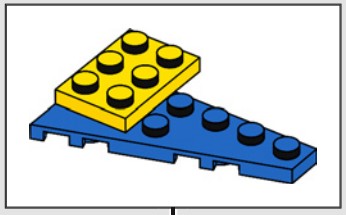

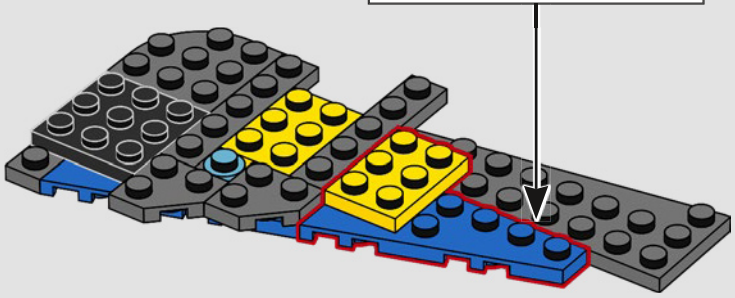

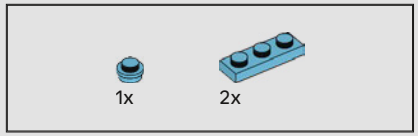


208

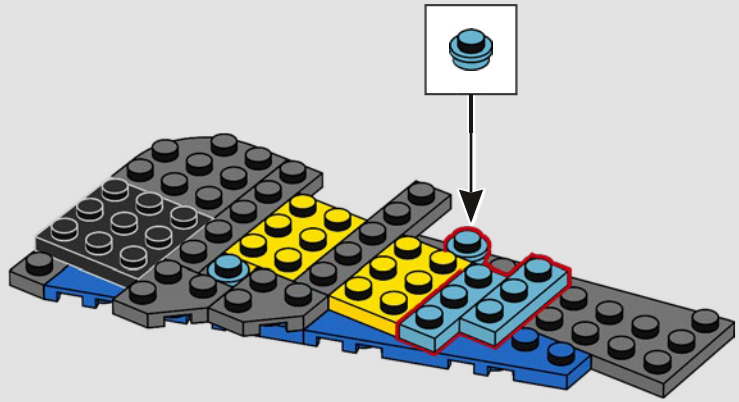

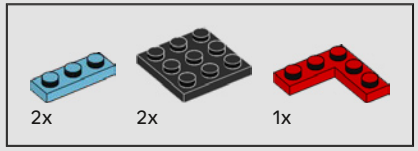


209

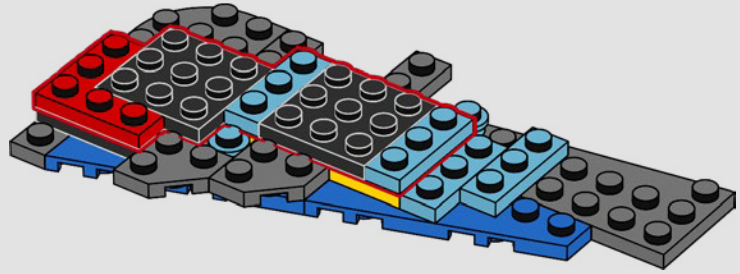

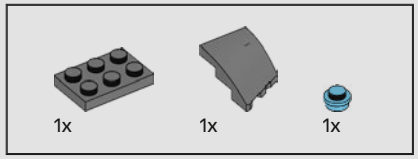


210

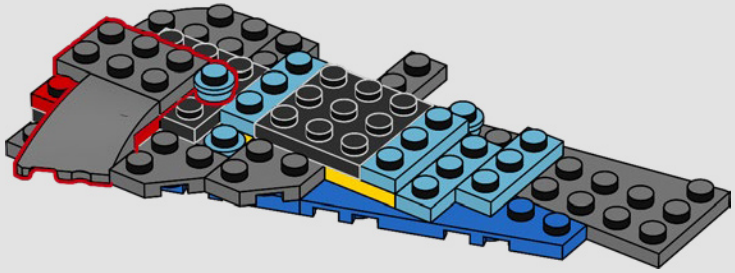

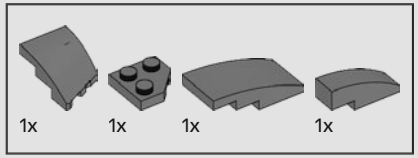


211

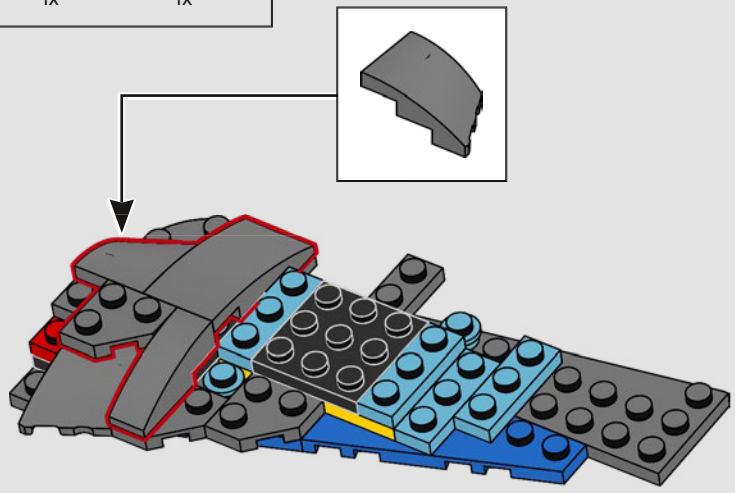

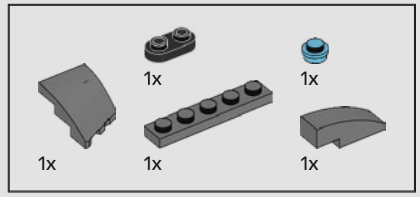


212

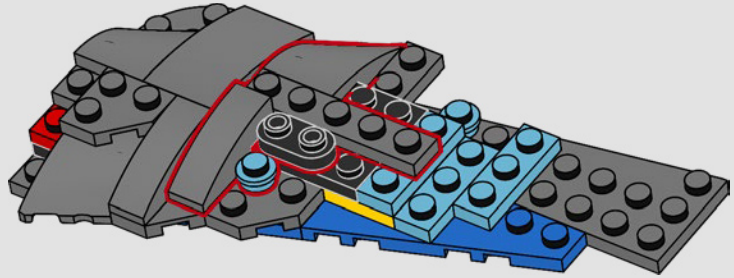

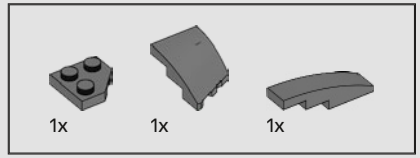


213

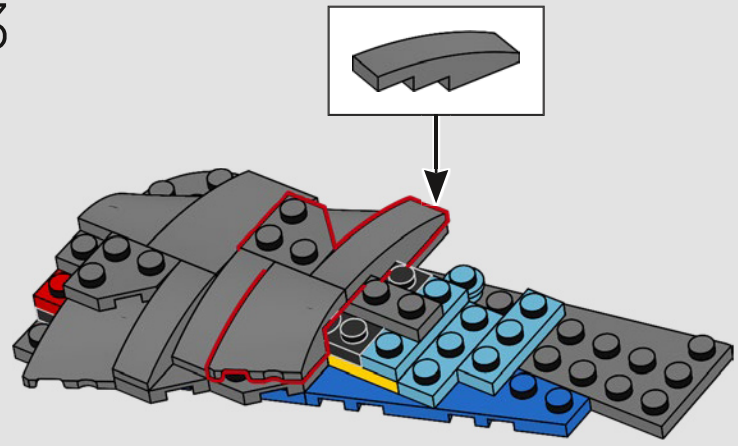

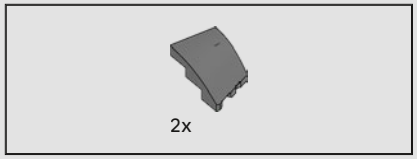


214

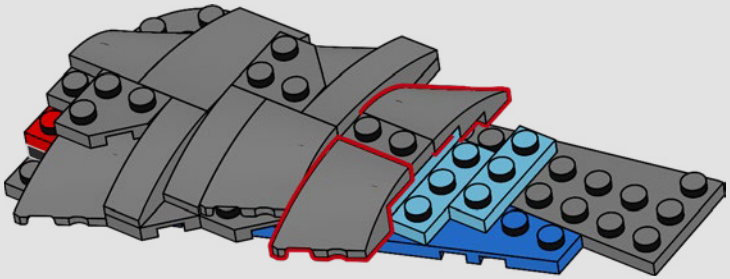

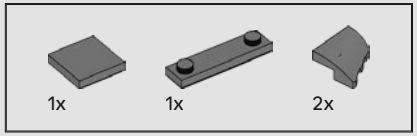


215

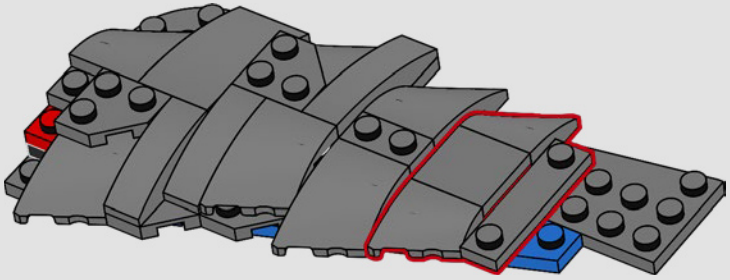

216

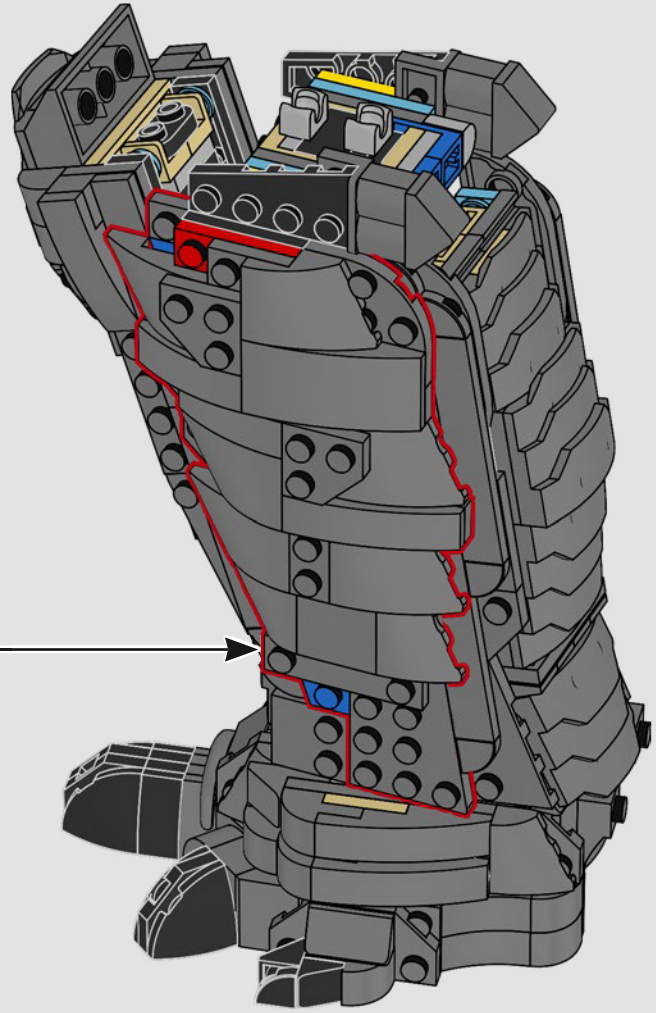

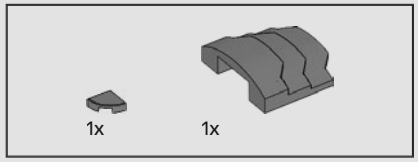


217

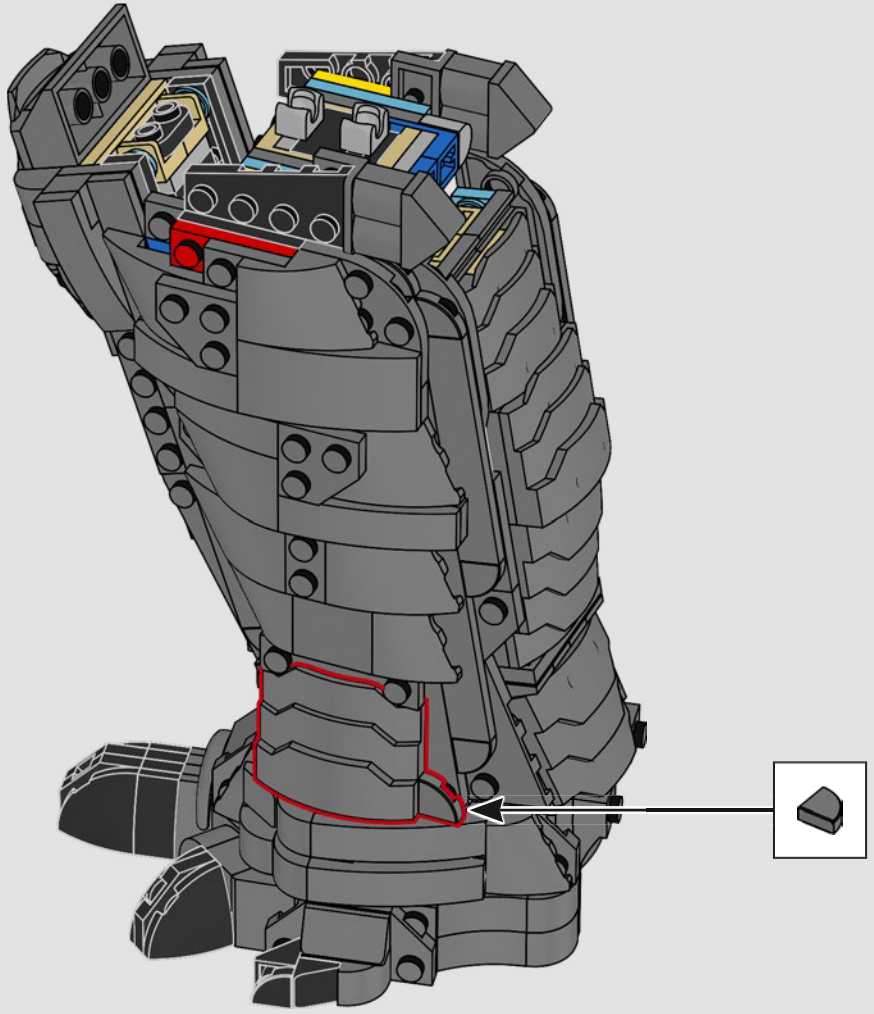

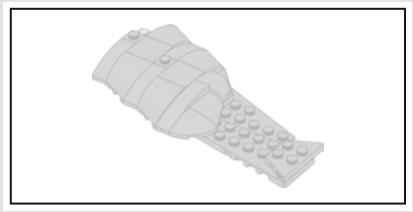

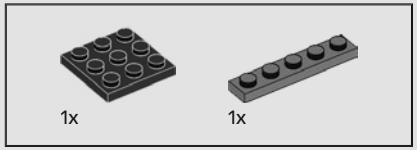


218

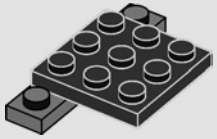

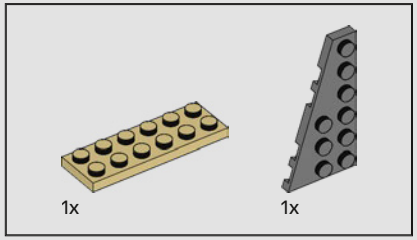


219

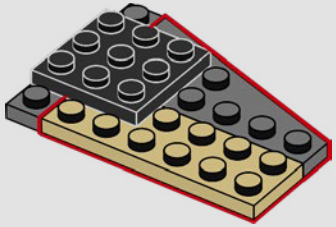

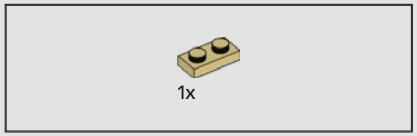


220

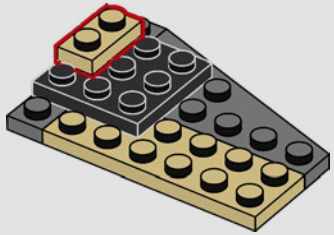

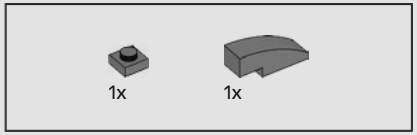


221

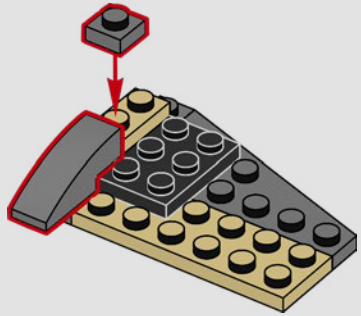

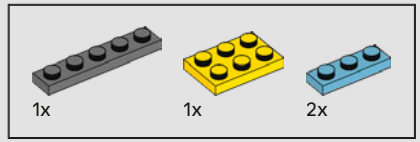


222

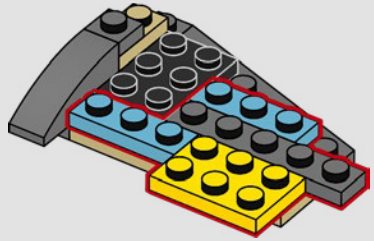

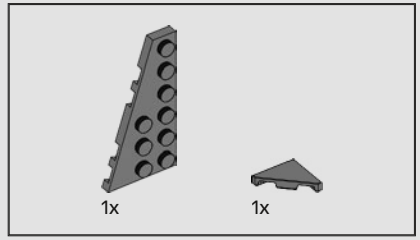


223

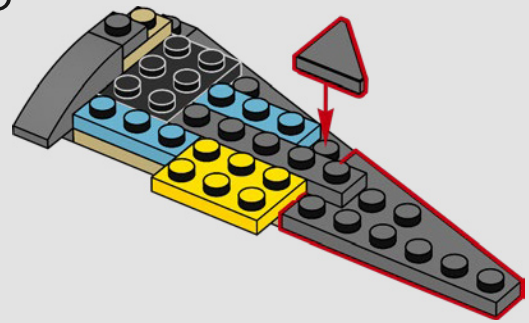

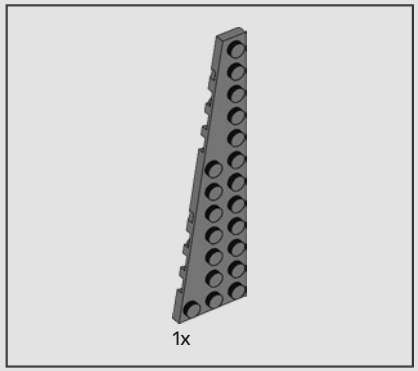


224

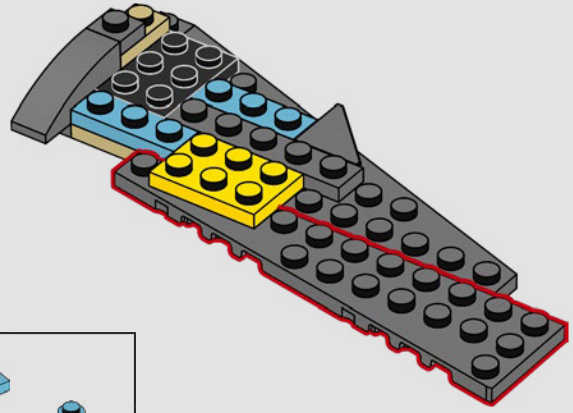

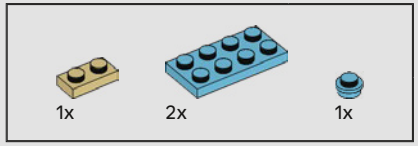


225

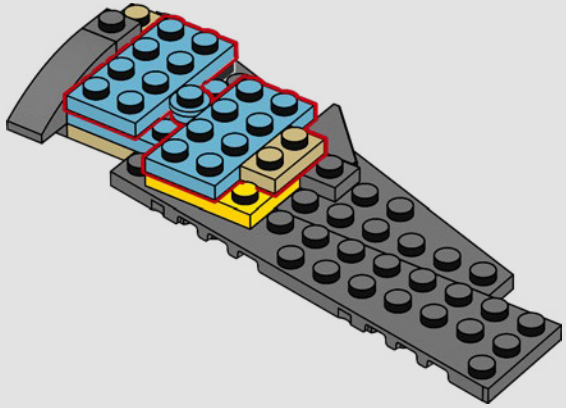

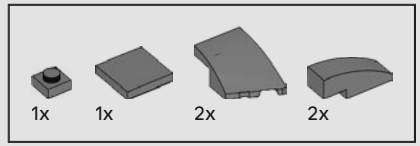


226

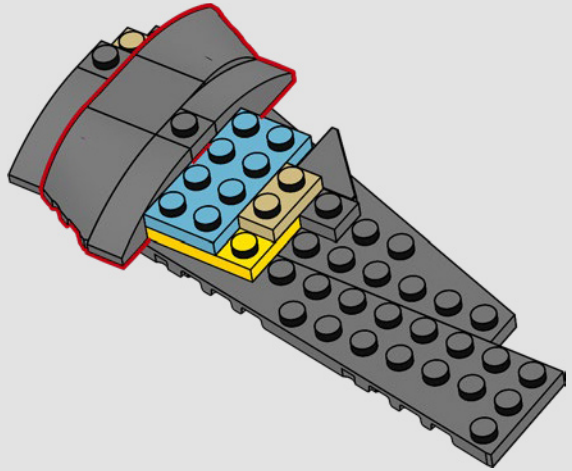

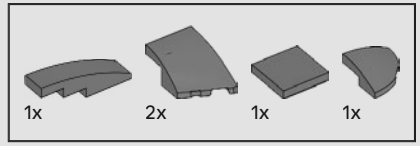


227

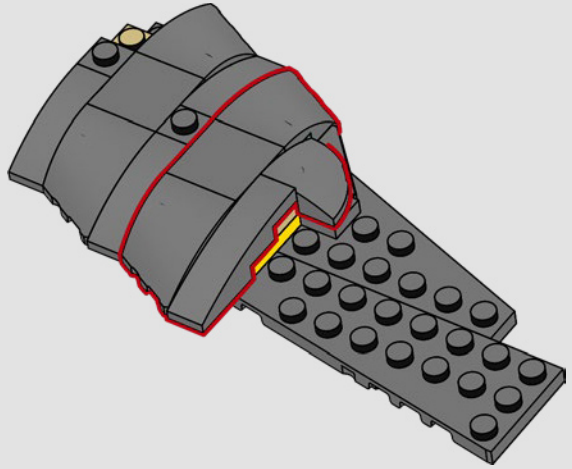




228

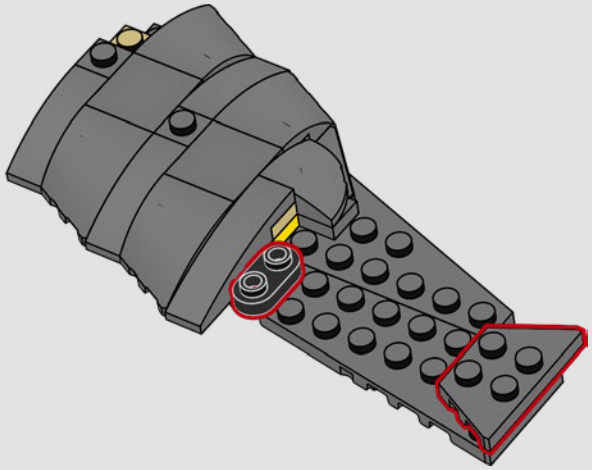




229

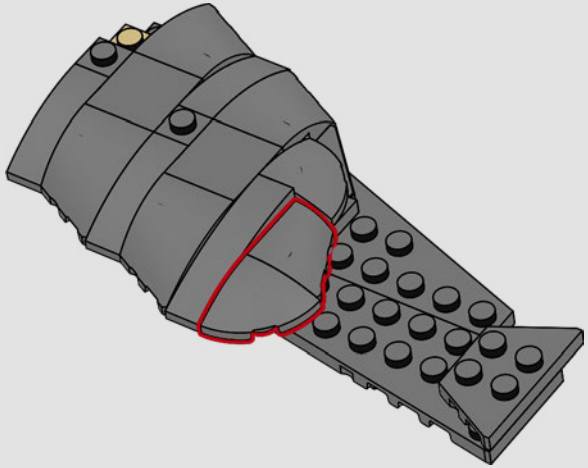

230

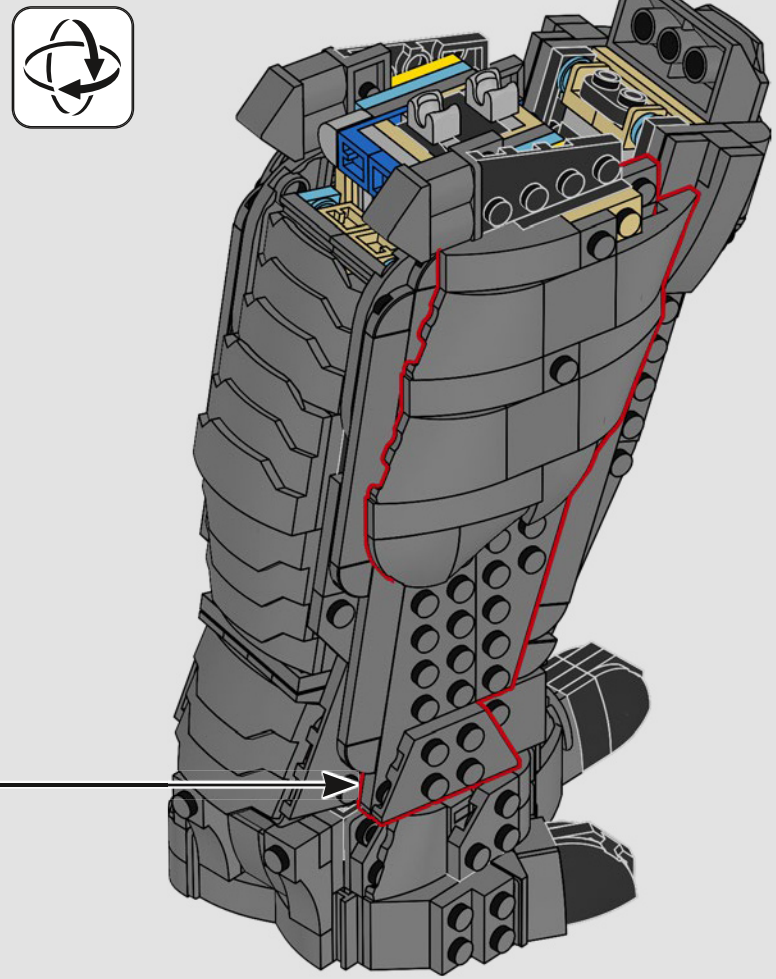




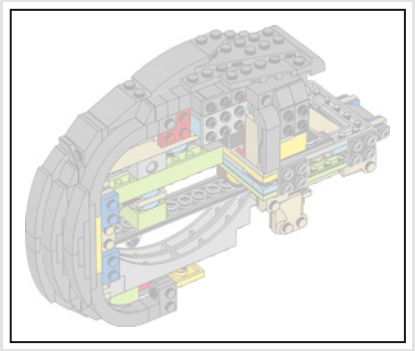

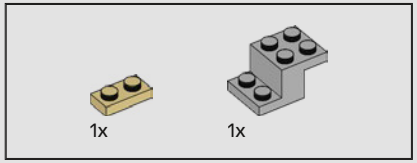


231

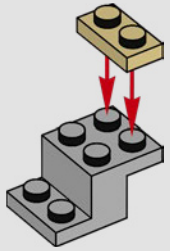

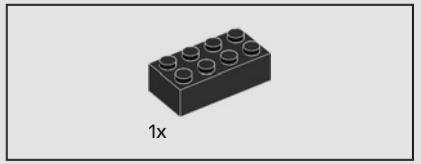


232

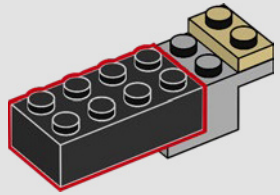

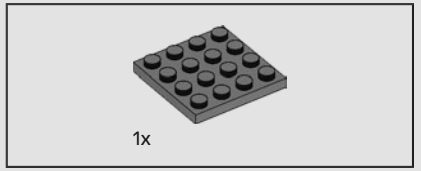


233

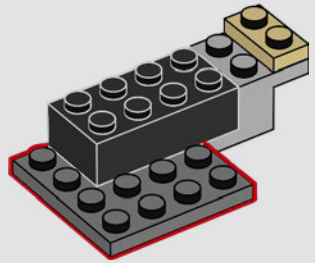

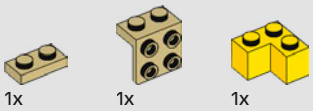


234

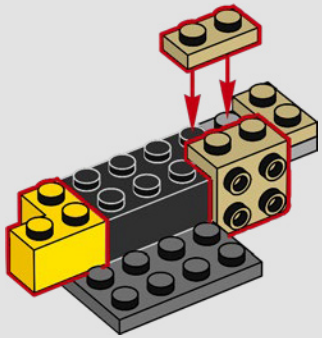

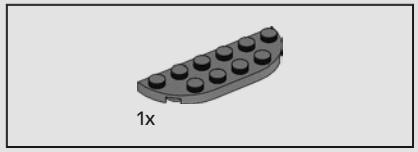


235

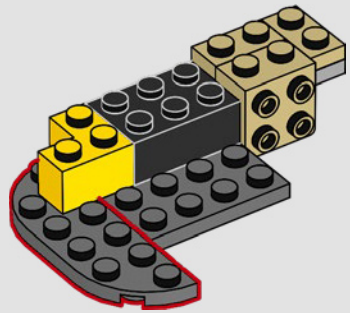

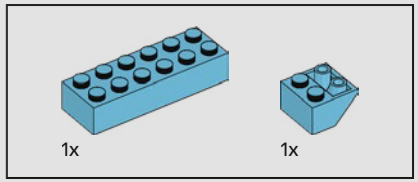


236

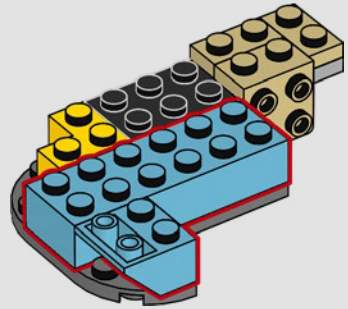

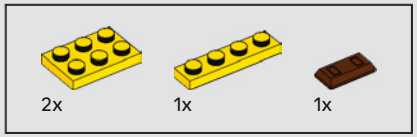


237

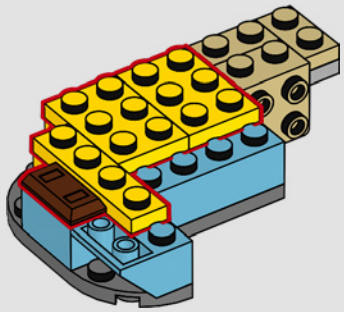

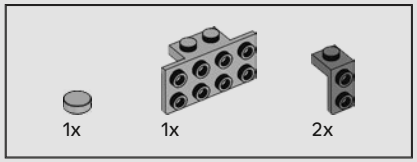


238

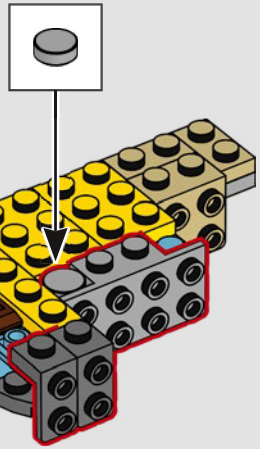

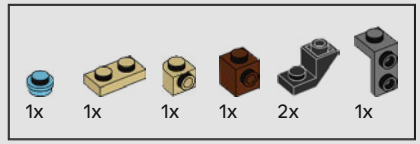


239

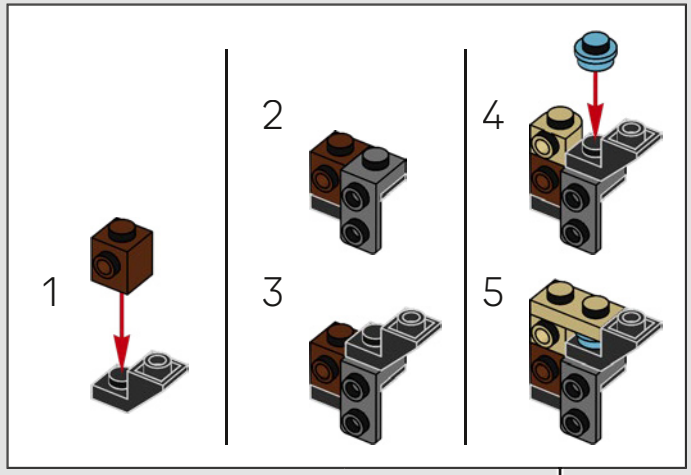


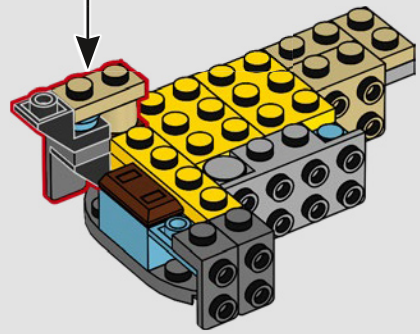

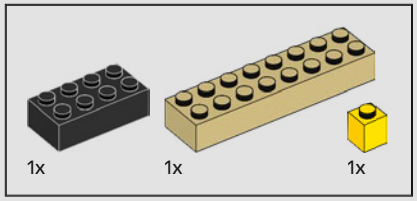


240

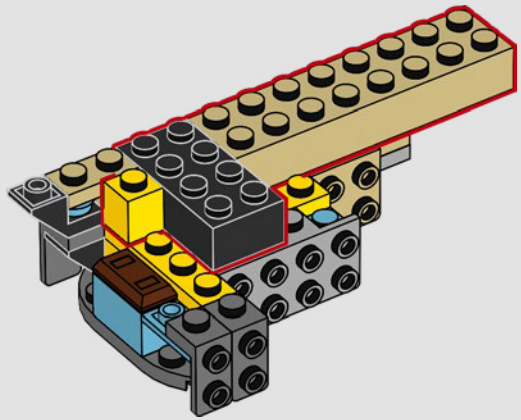

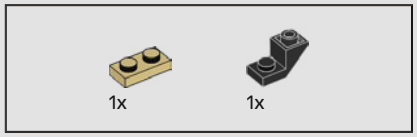


241

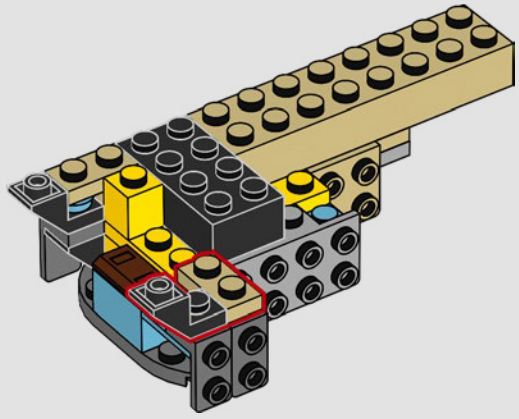

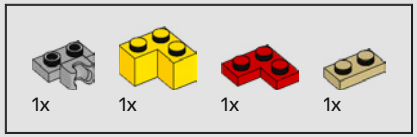


242

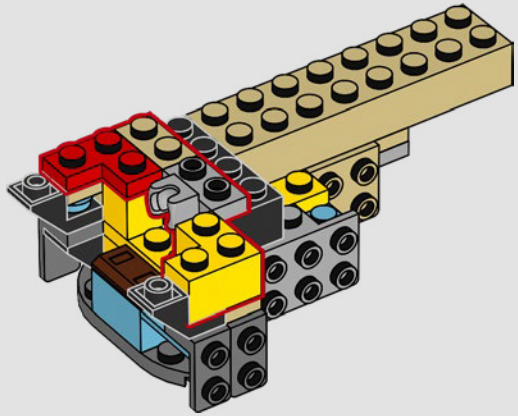




243

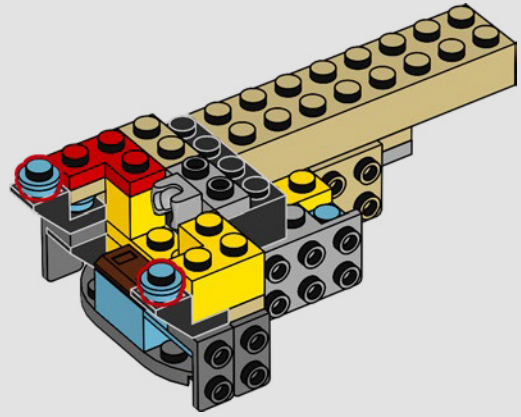

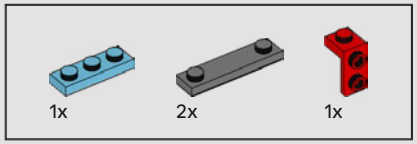


244

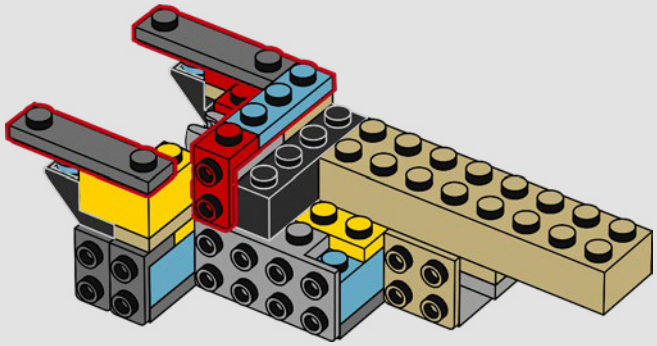

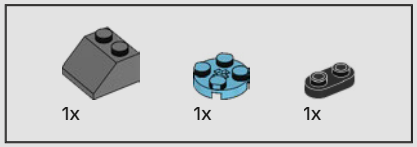


245

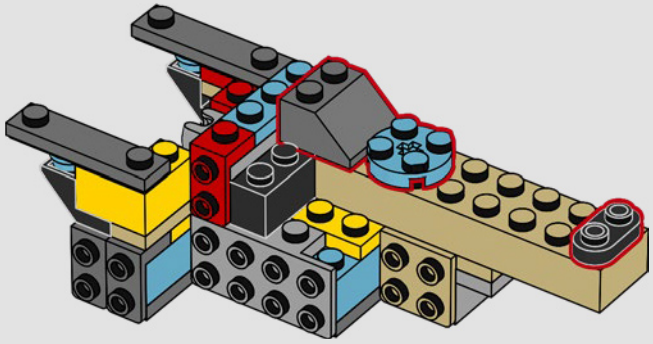

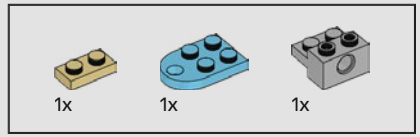


246

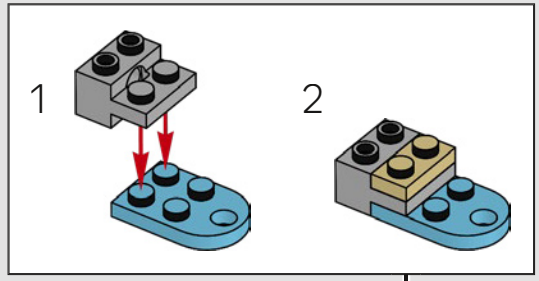


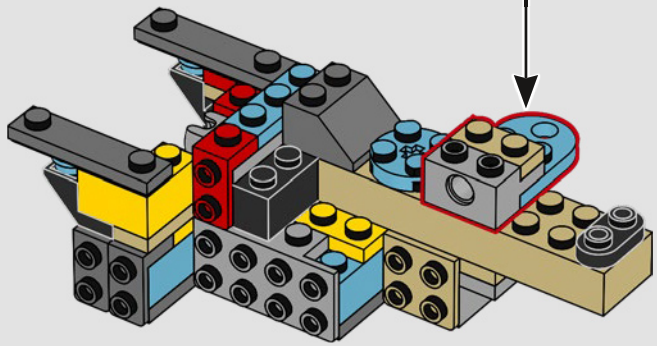

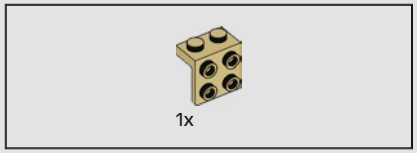


247

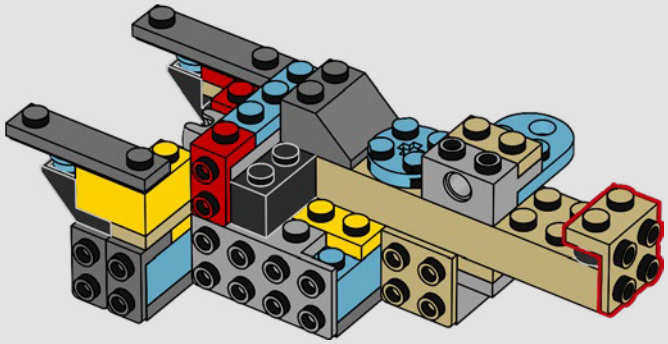

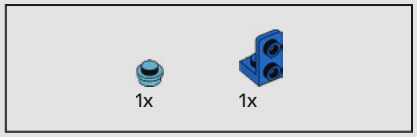


248

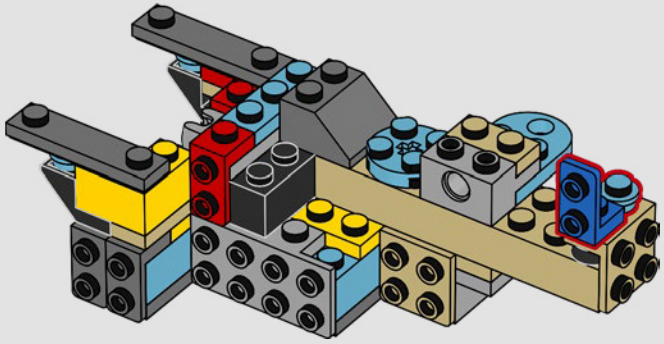

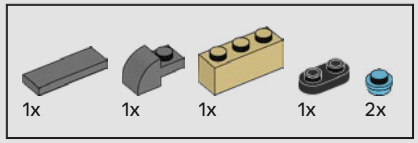


249

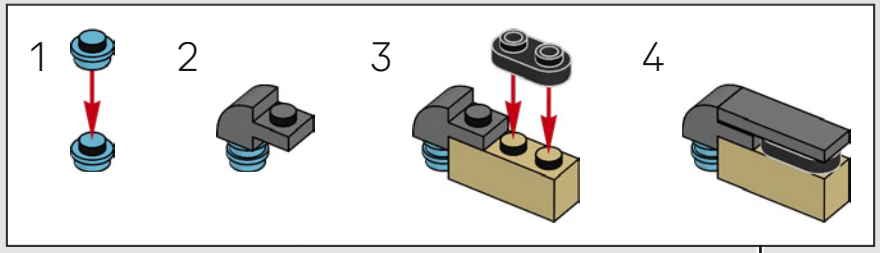


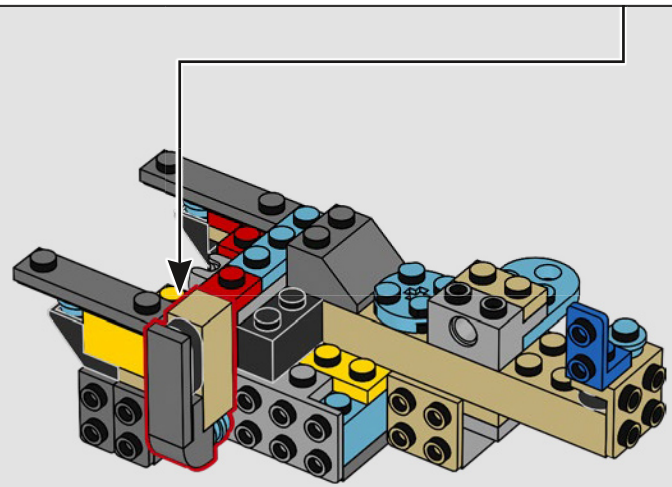

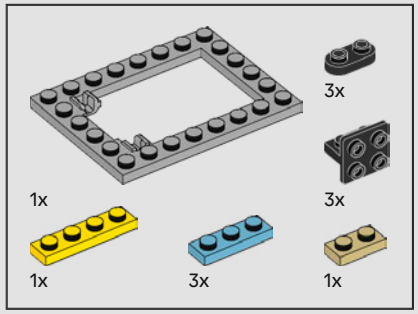


250

1

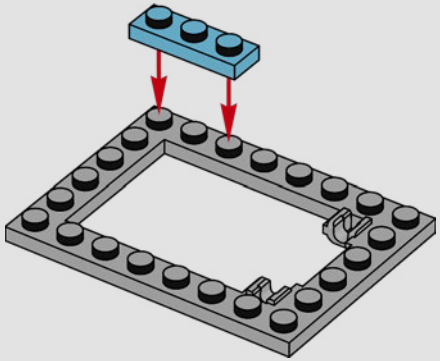

2

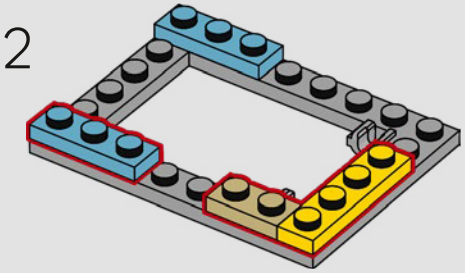

3

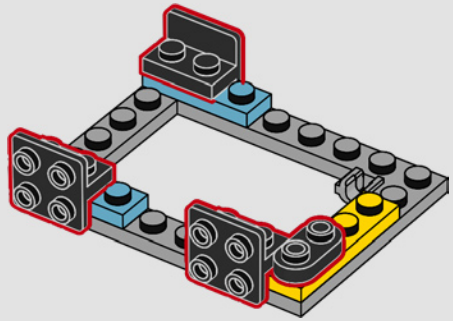

4

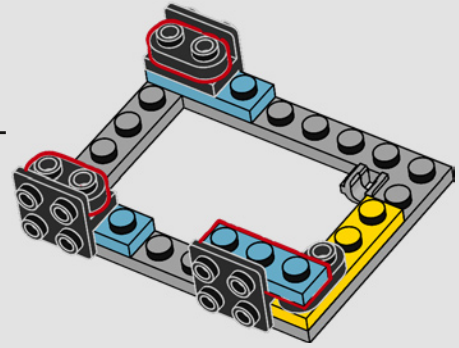

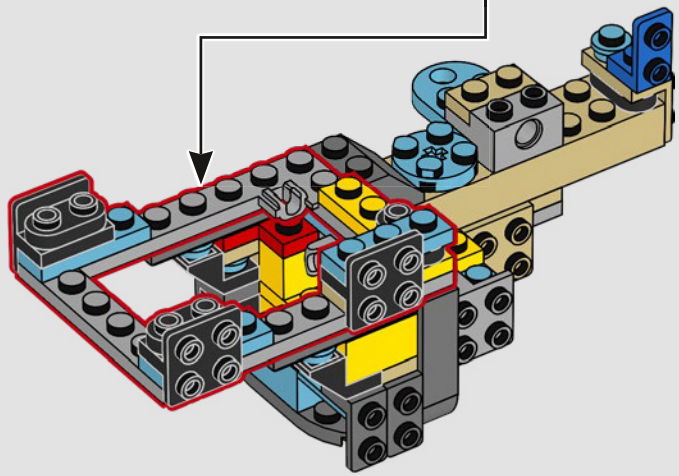

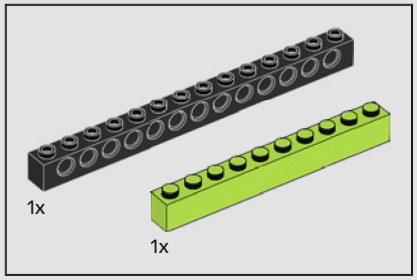


251

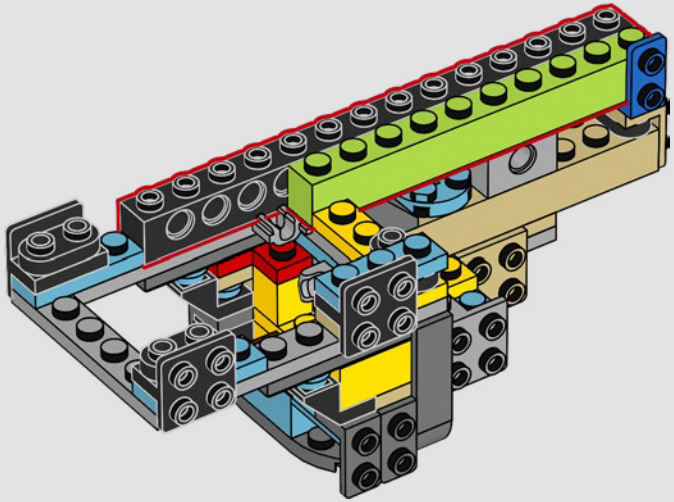

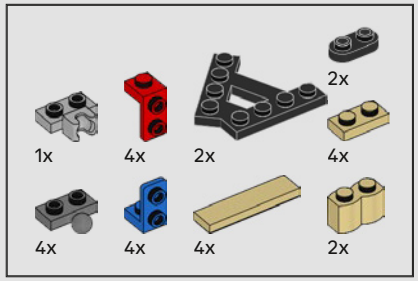


252

1

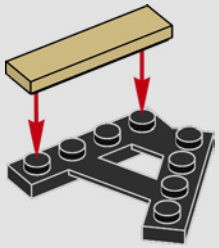

2

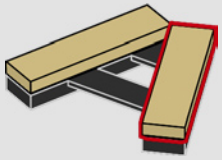

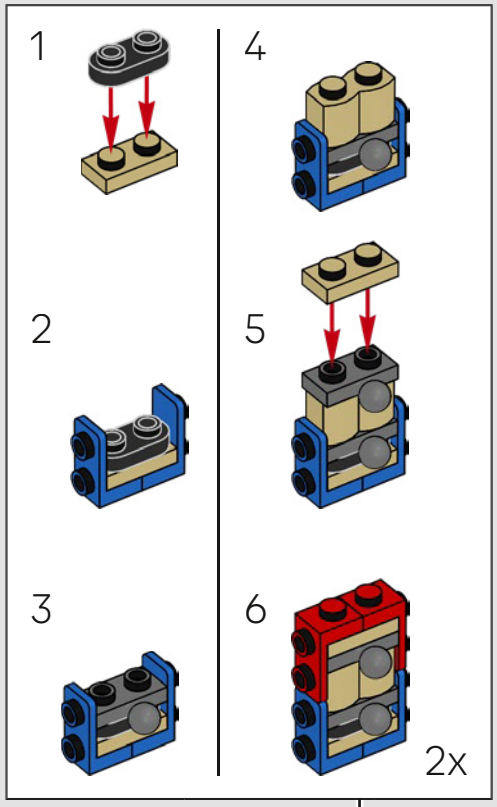


3

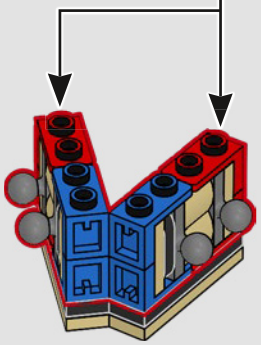

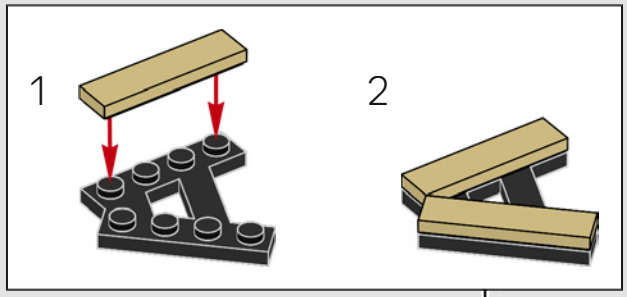


4

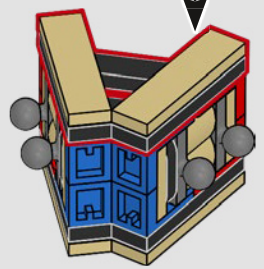

5

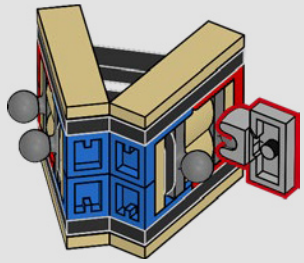

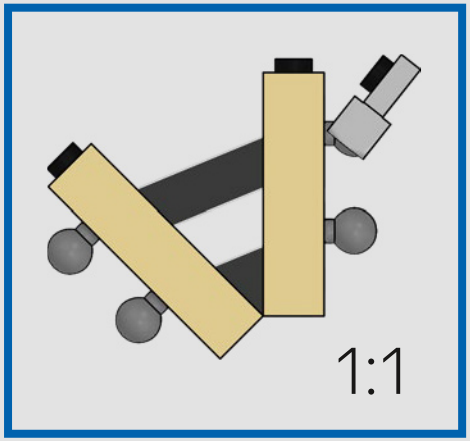


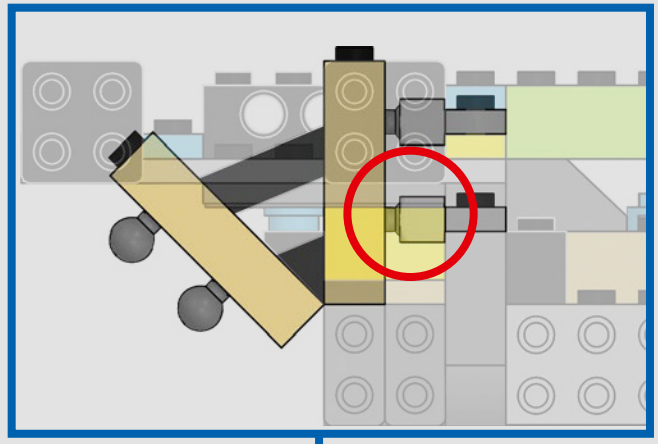

253

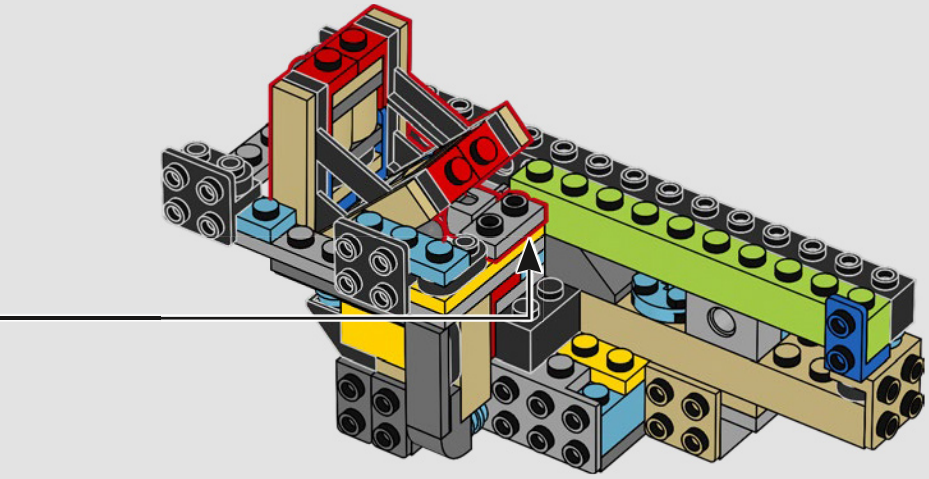

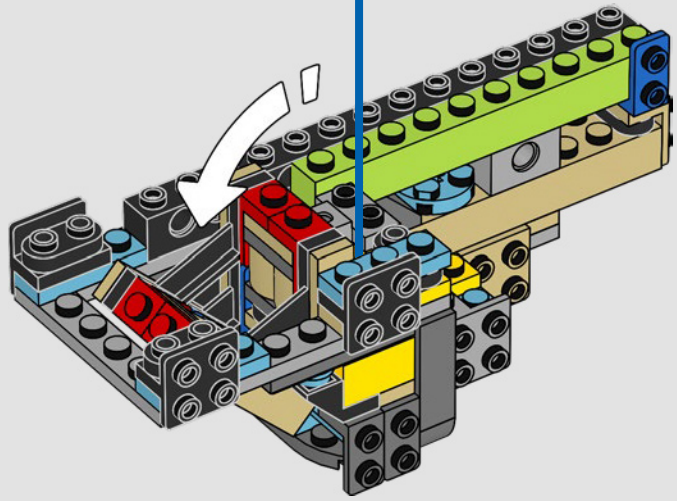

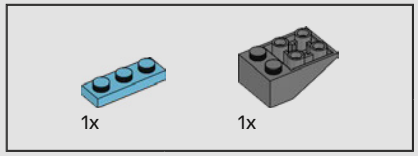


254

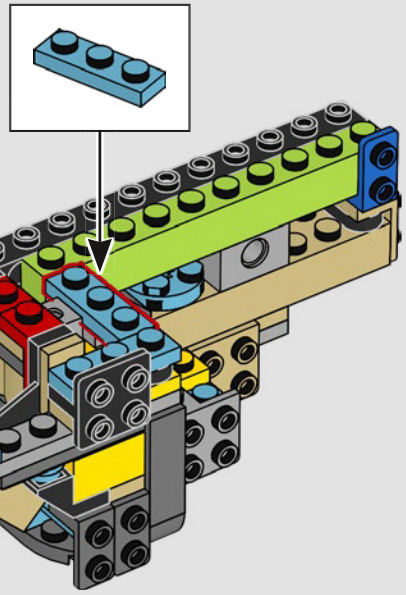

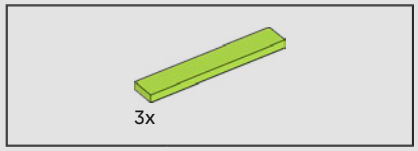


255

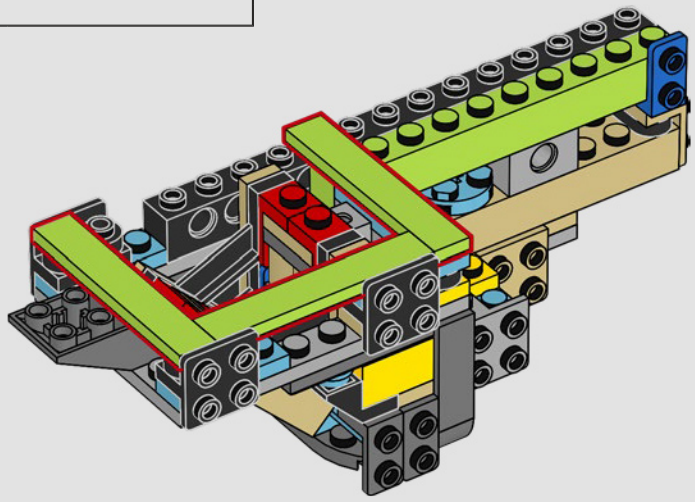

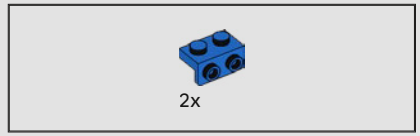


256

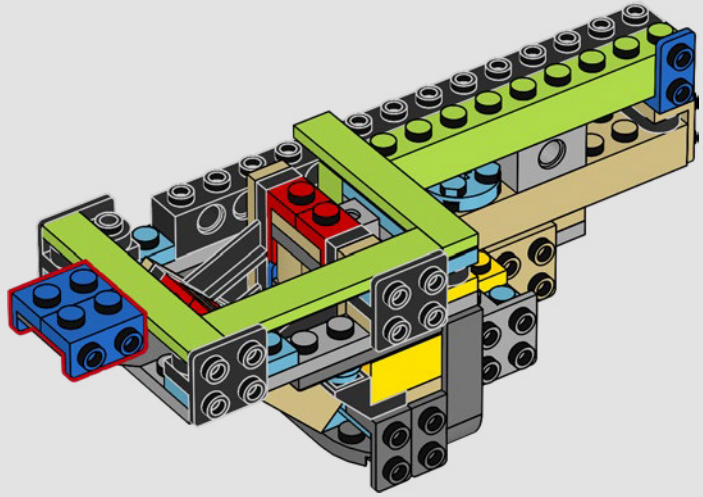




257

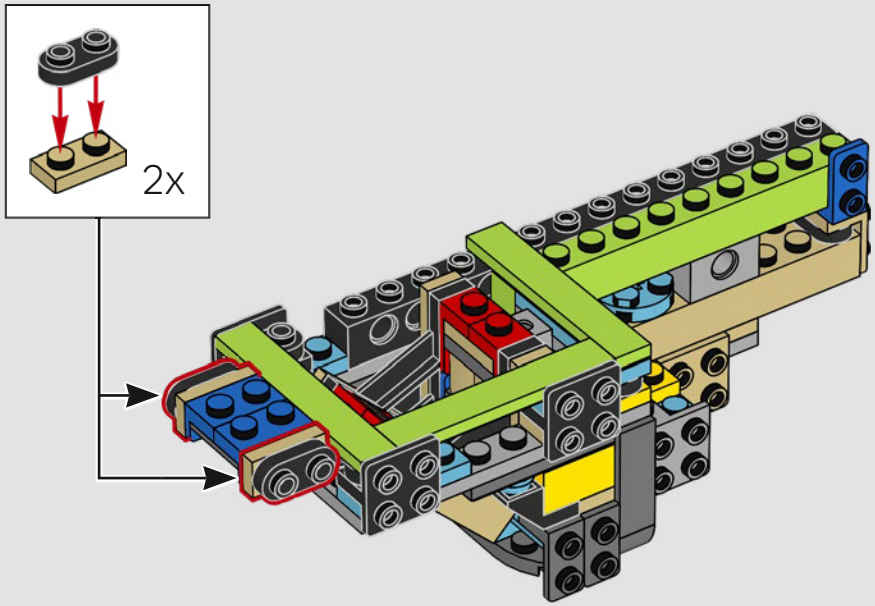


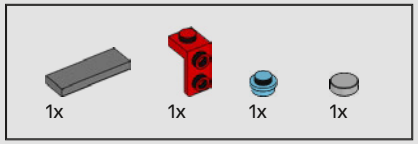


258

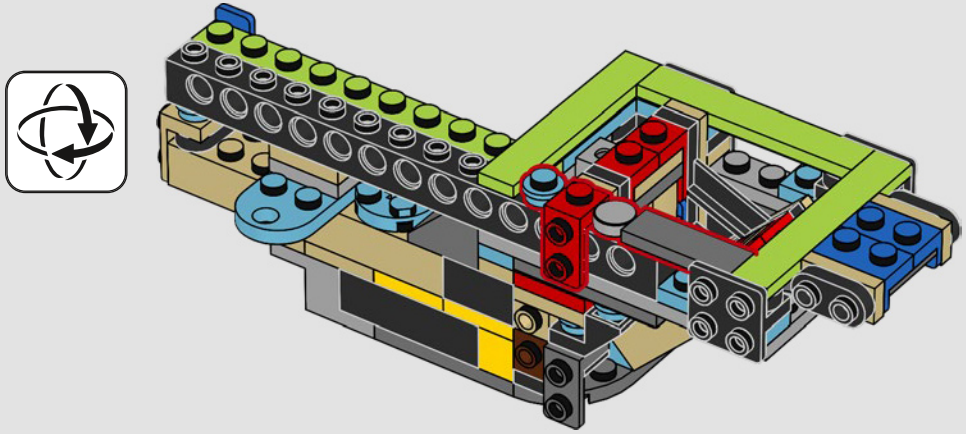




259

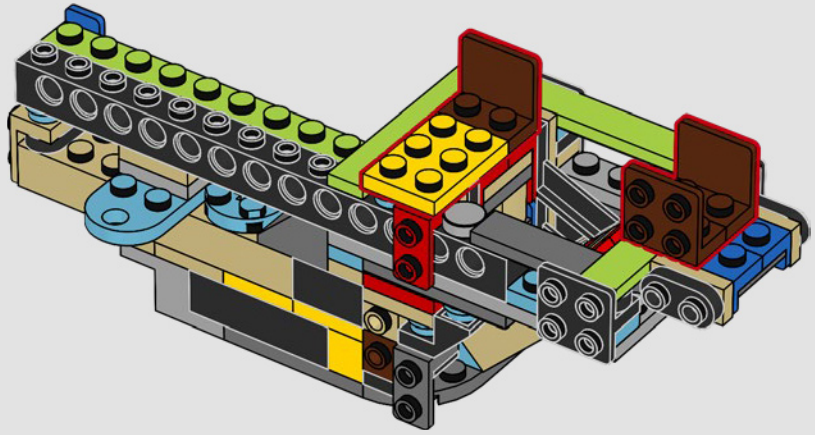

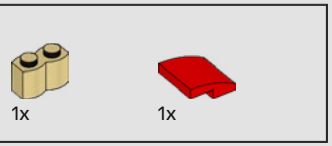


260

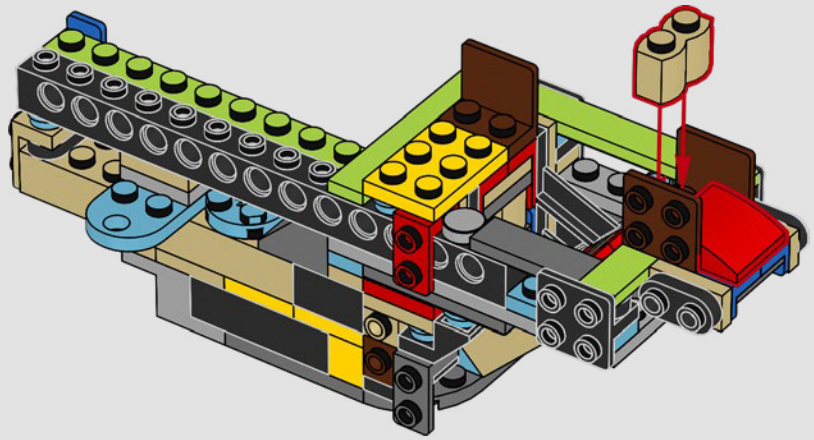

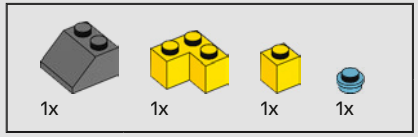


261

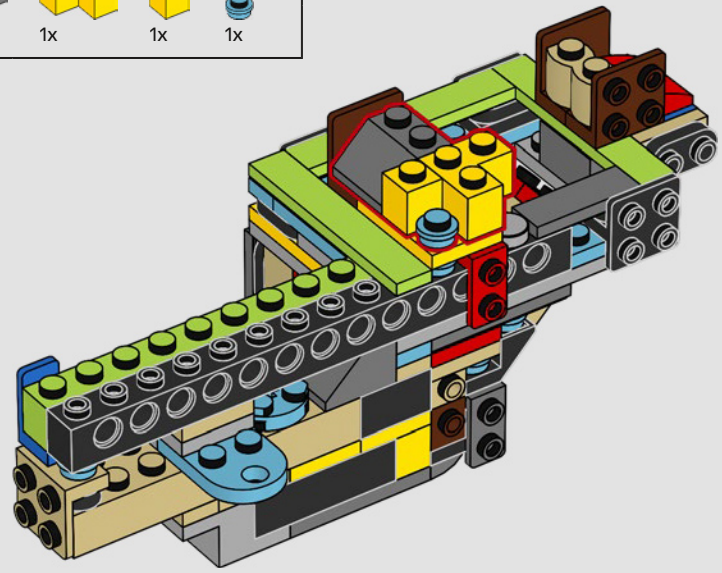

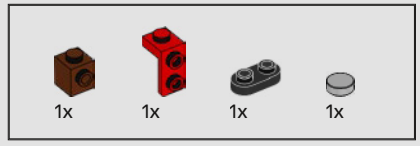


262

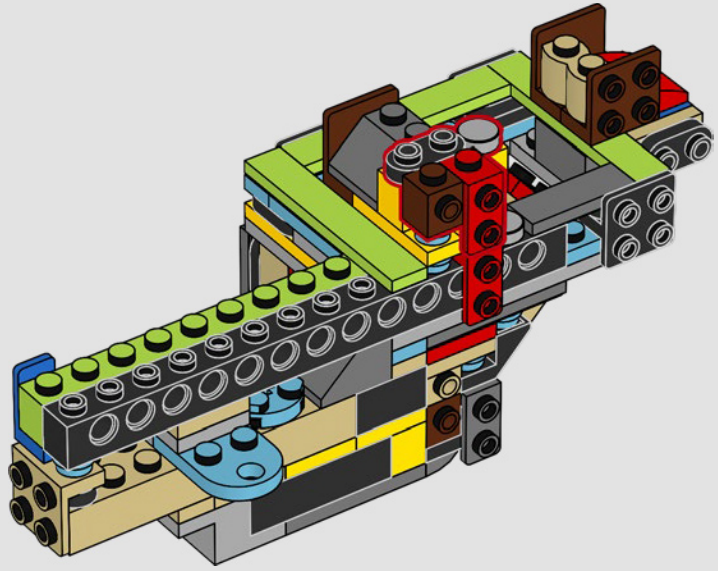

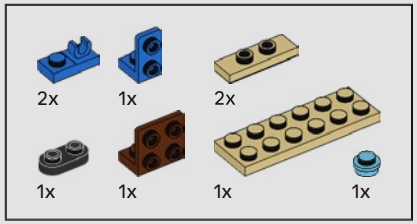


263

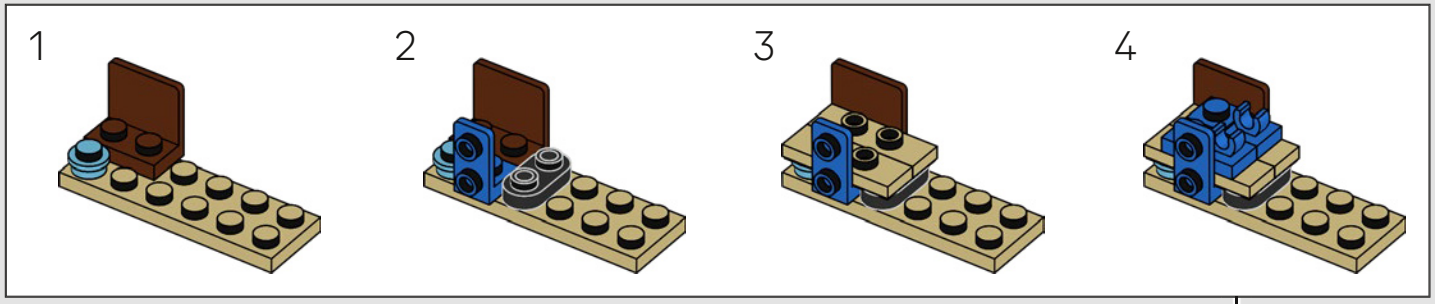


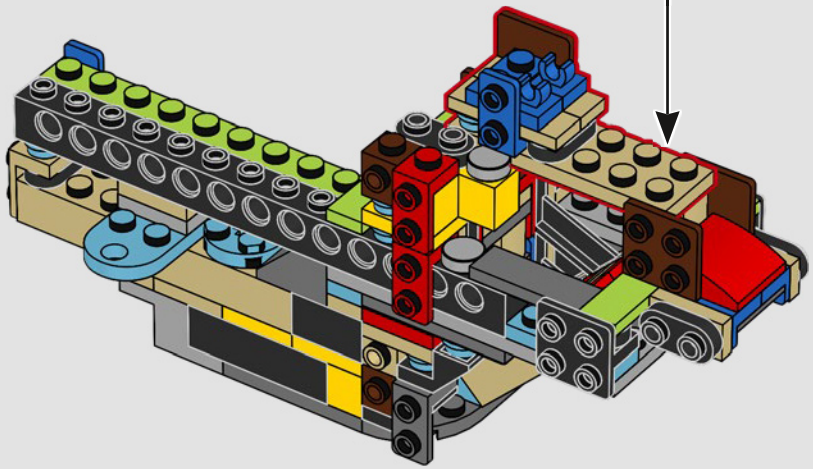

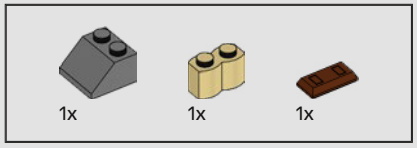


264

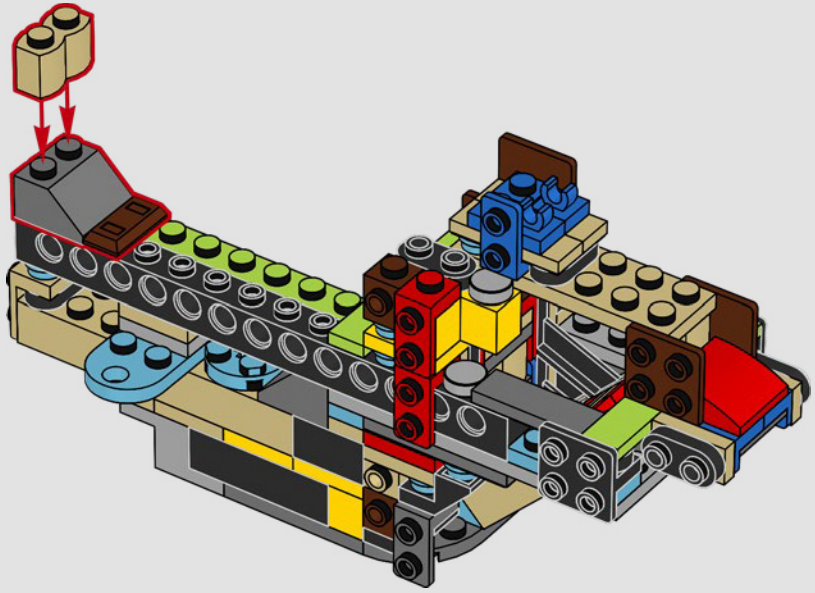

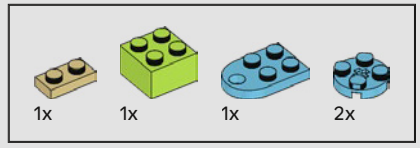


265

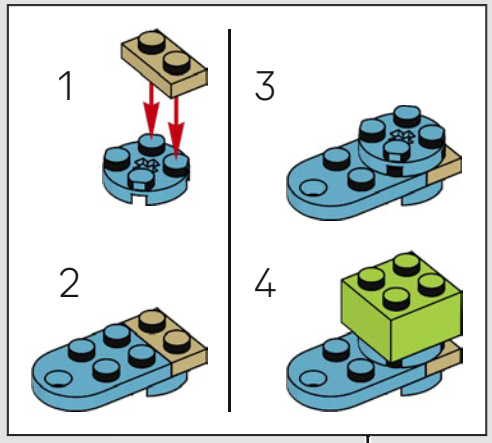


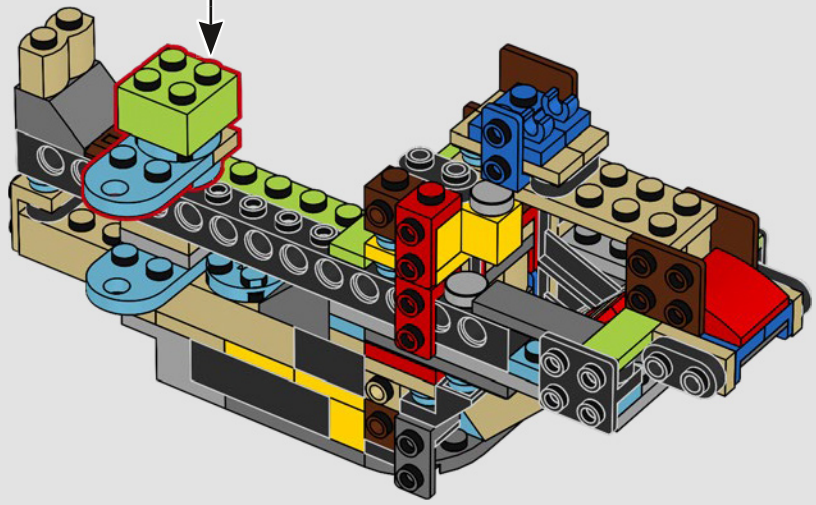

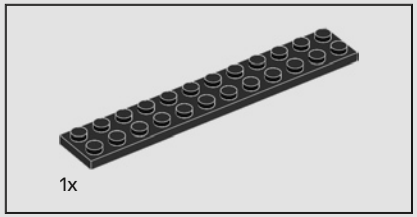


266

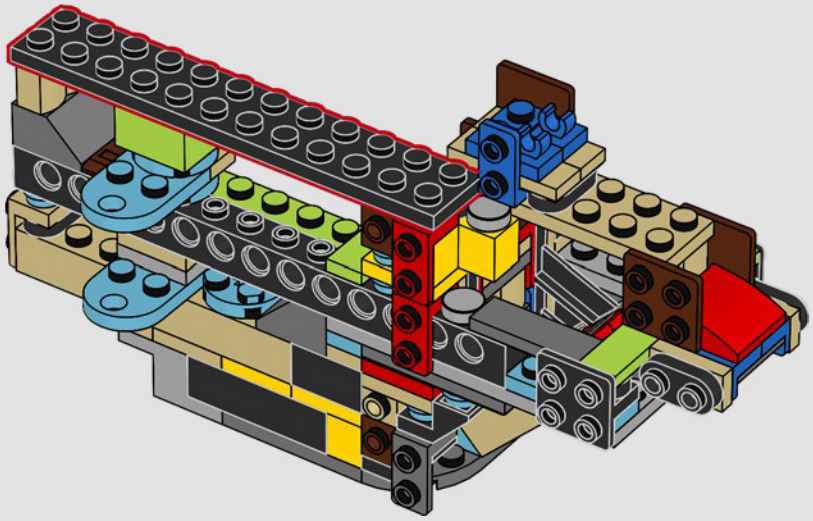

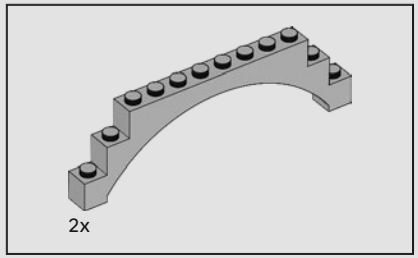


267

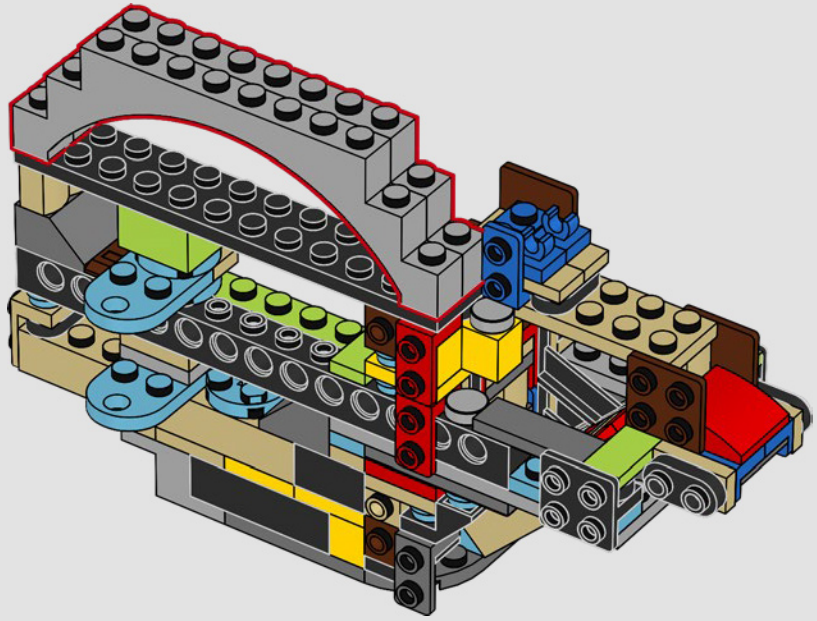

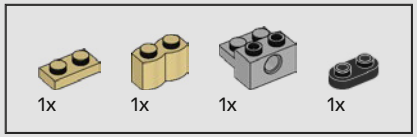


268

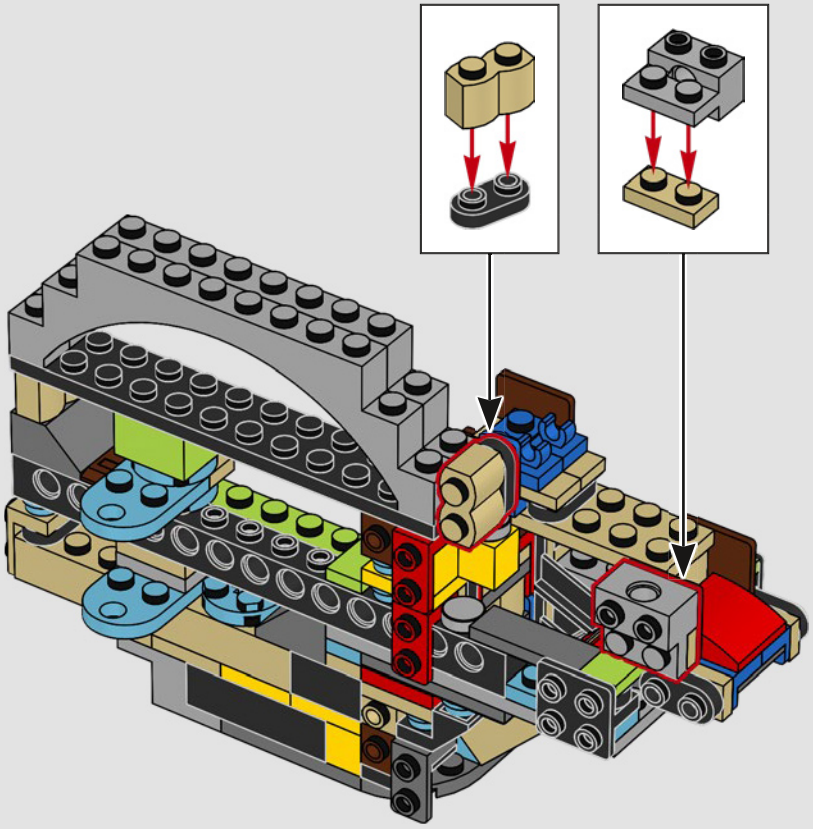

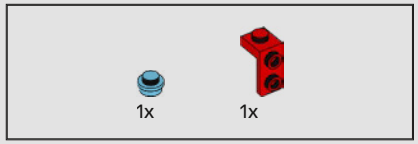


269

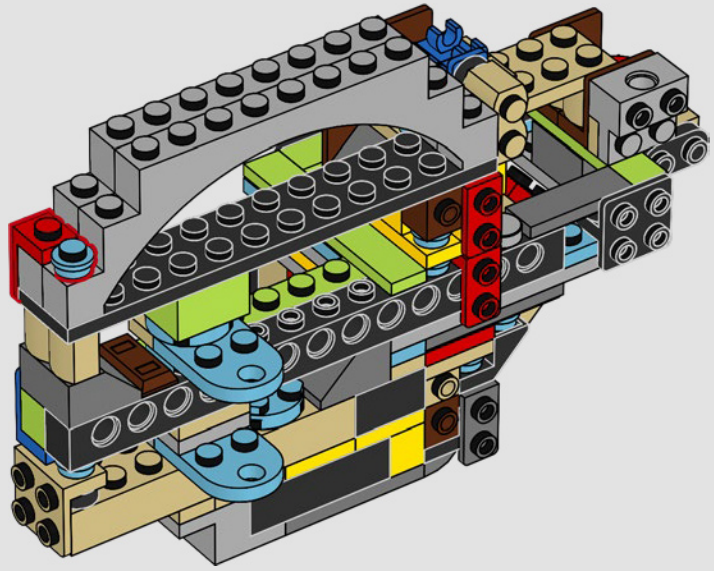

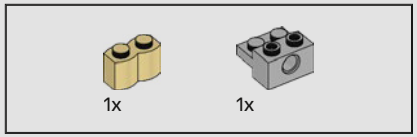


270

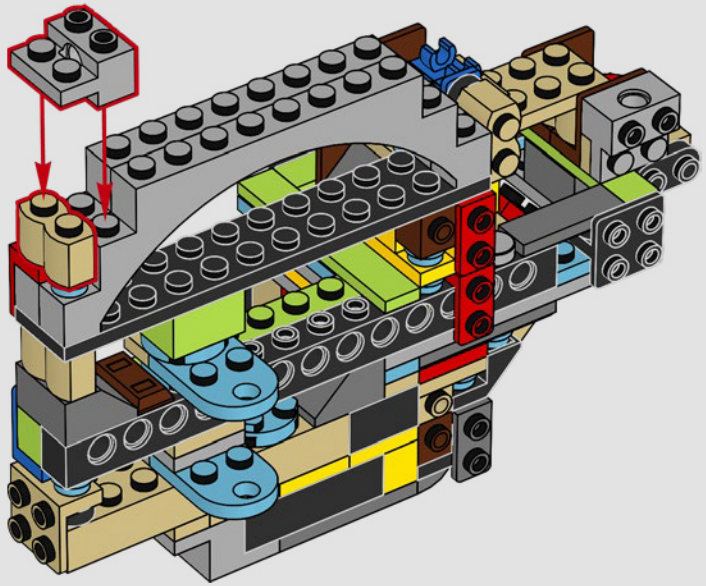

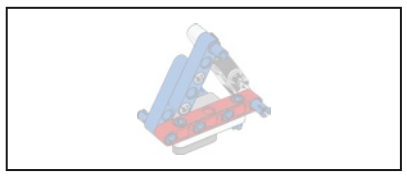

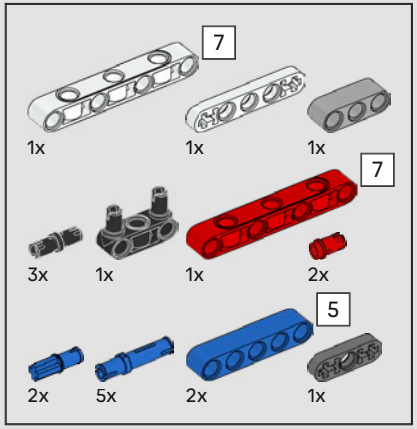


271

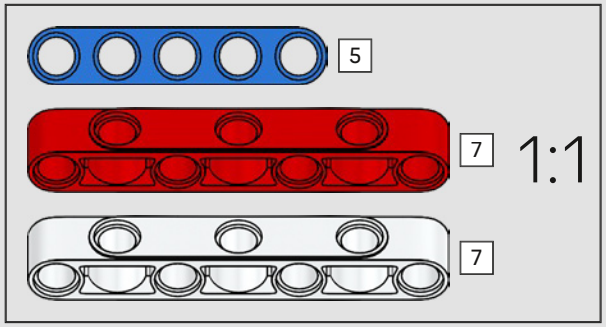


1

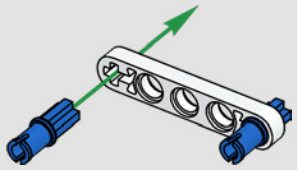

2

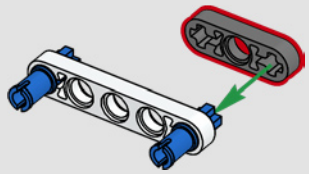

3

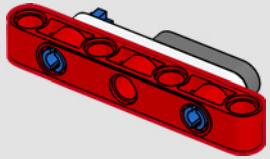

4

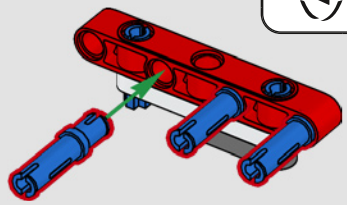

5

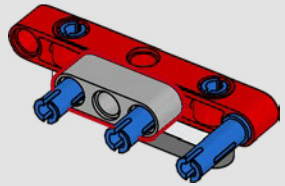

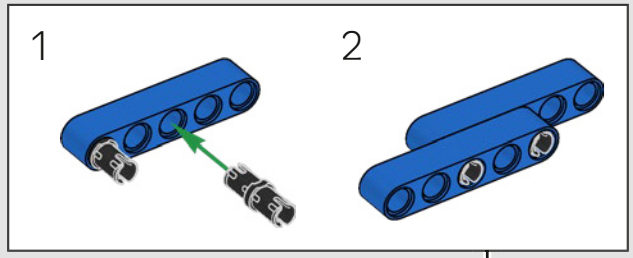


6

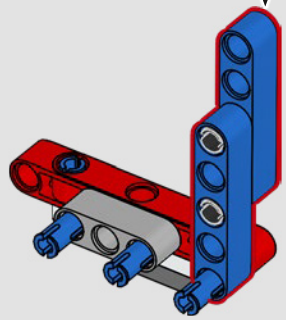

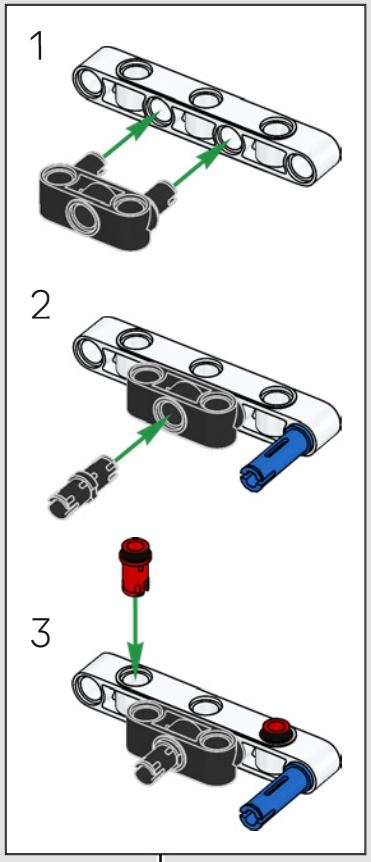
1
2
3

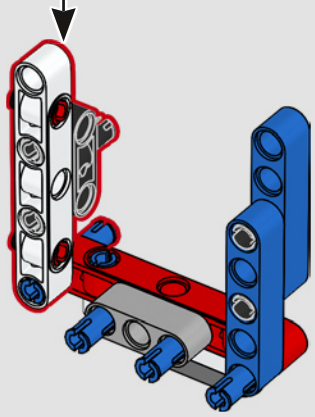
7

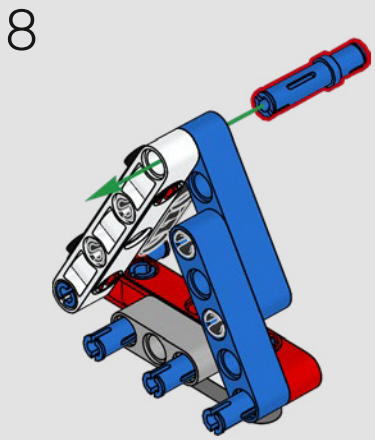
8

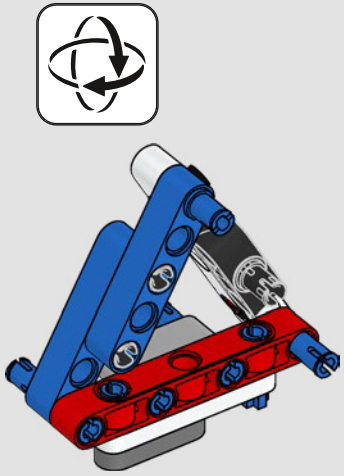
9

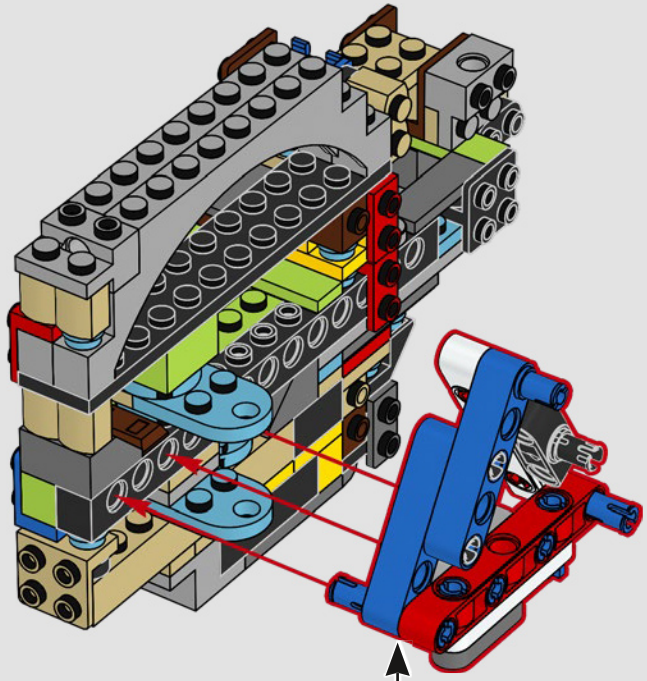

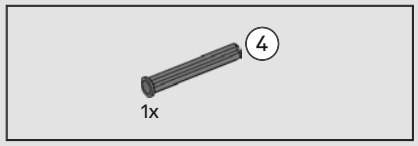


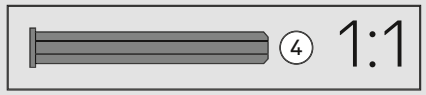


272

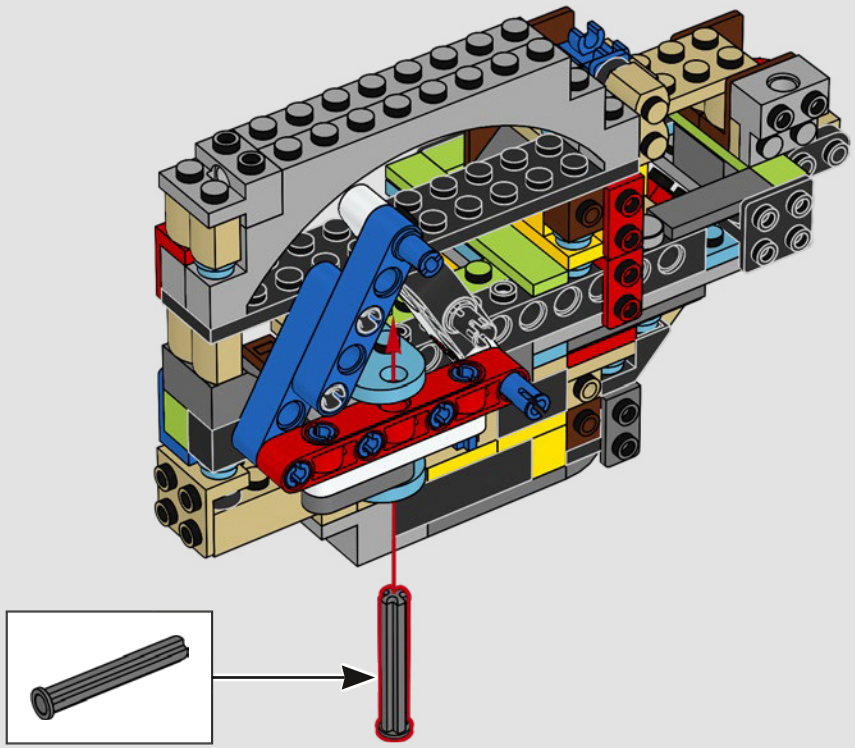

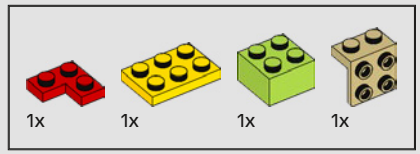


273

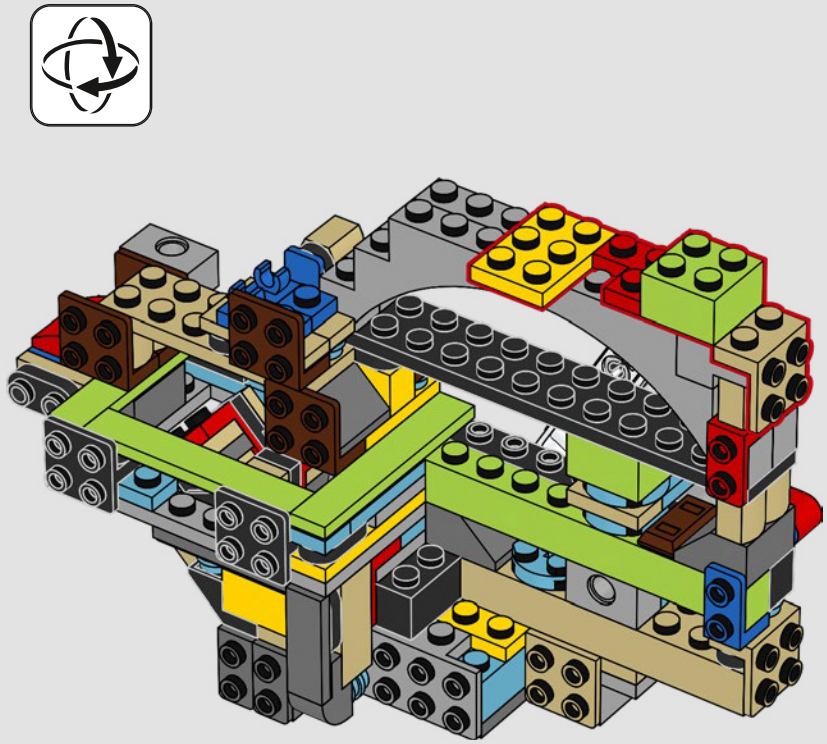




# 274

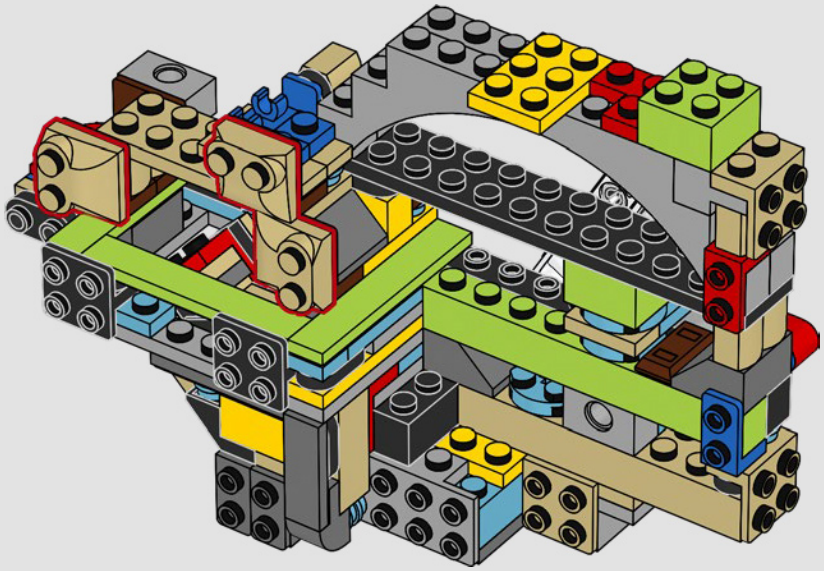




# 275

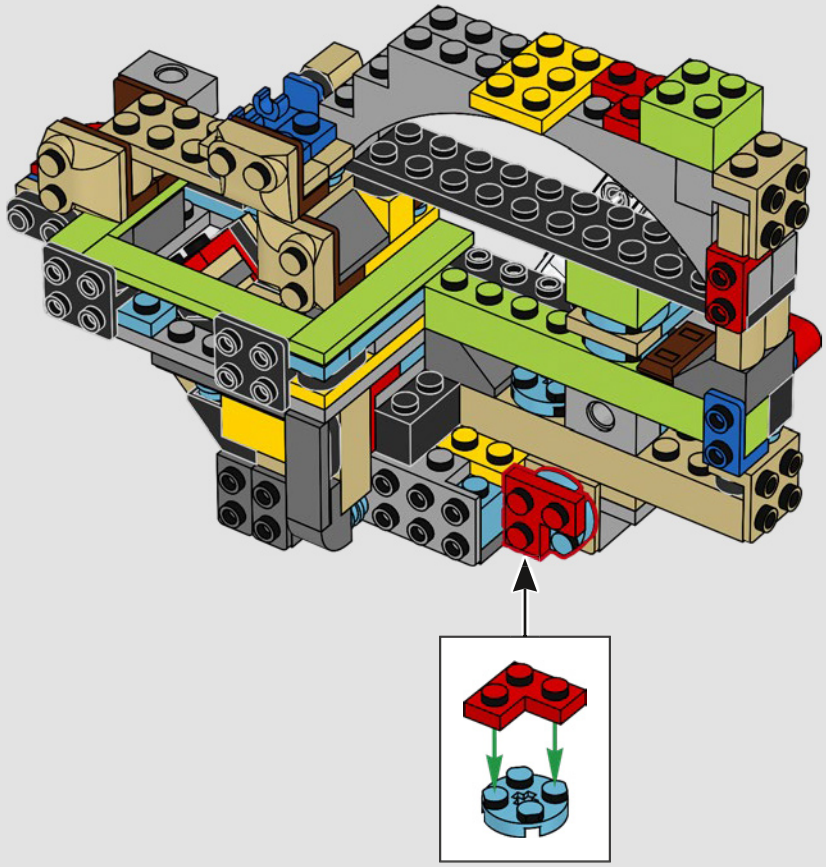




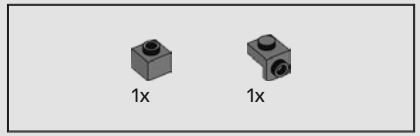


276

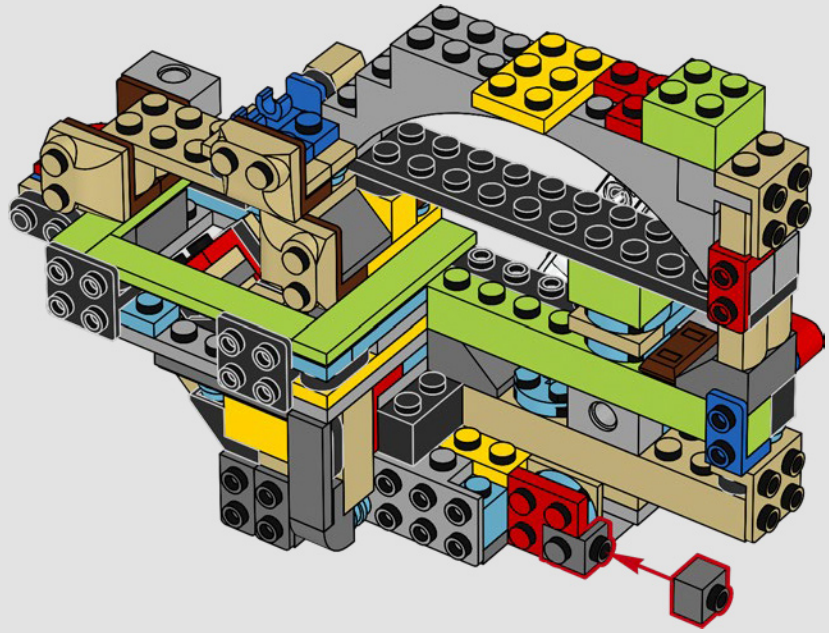

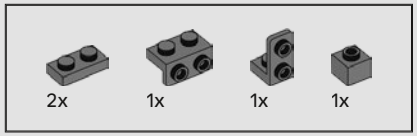


277

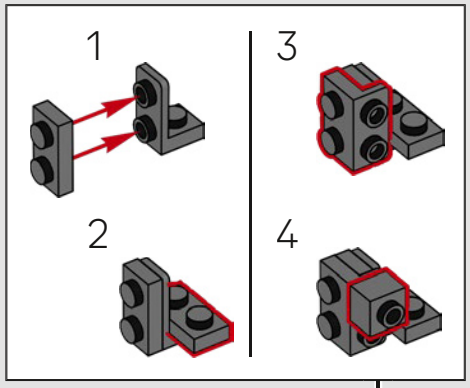


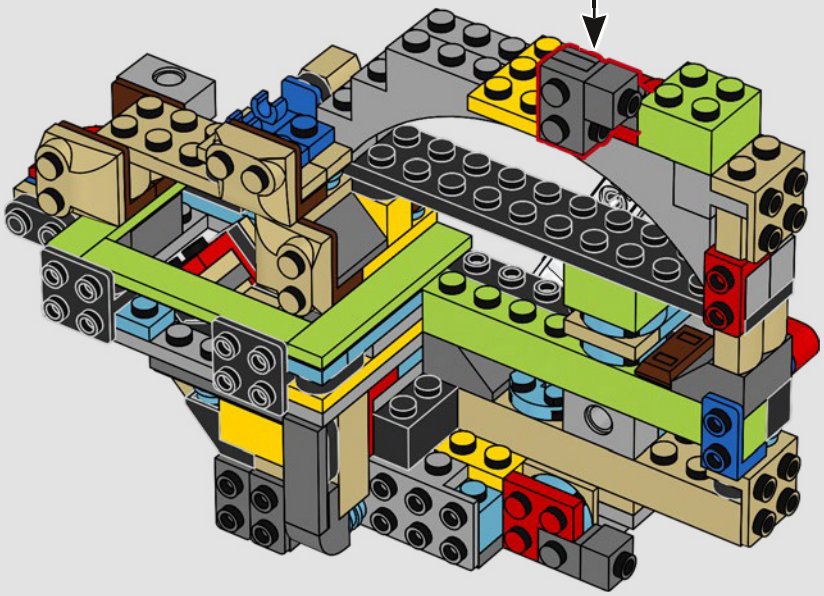

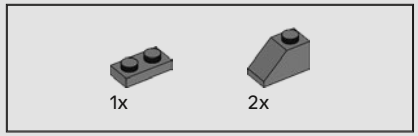


278

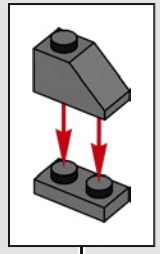

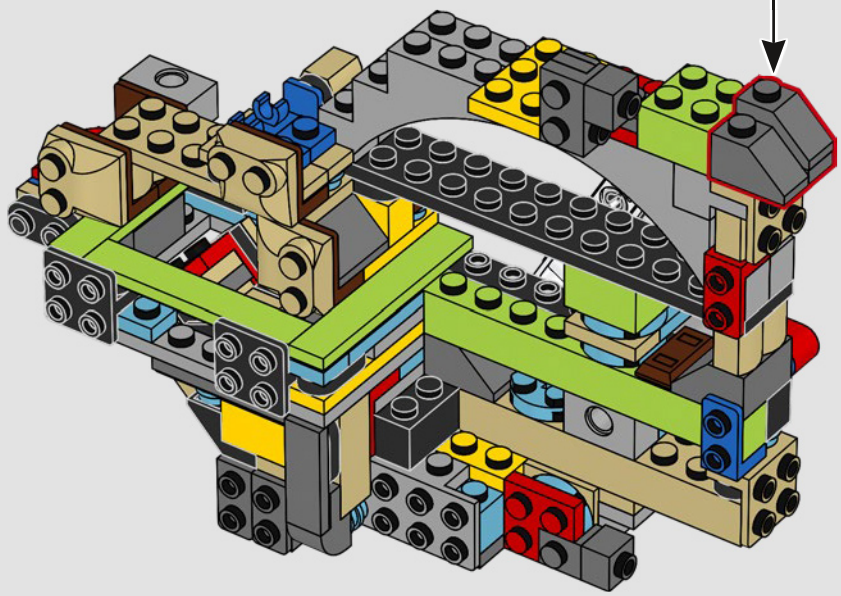

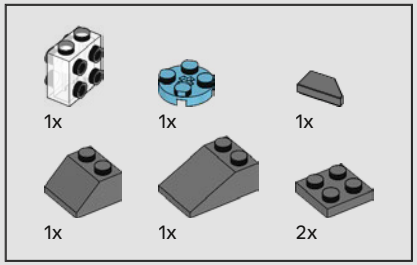


279

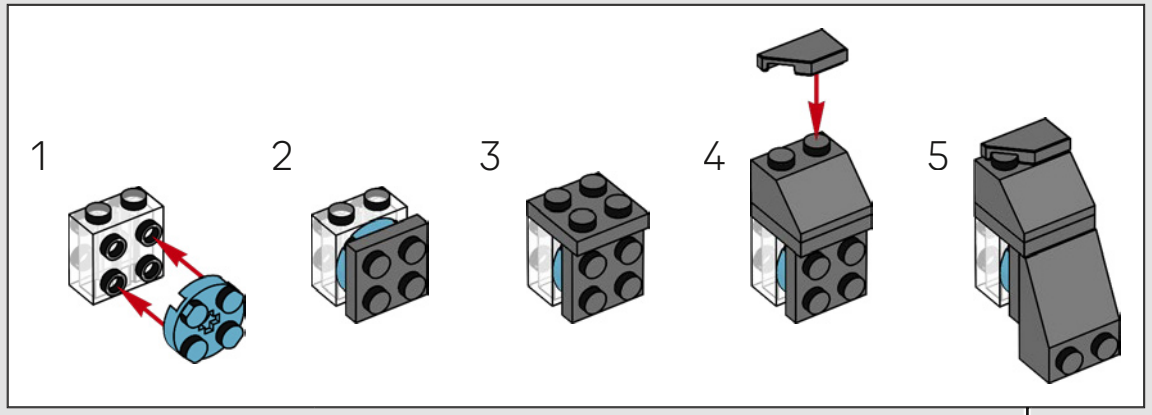


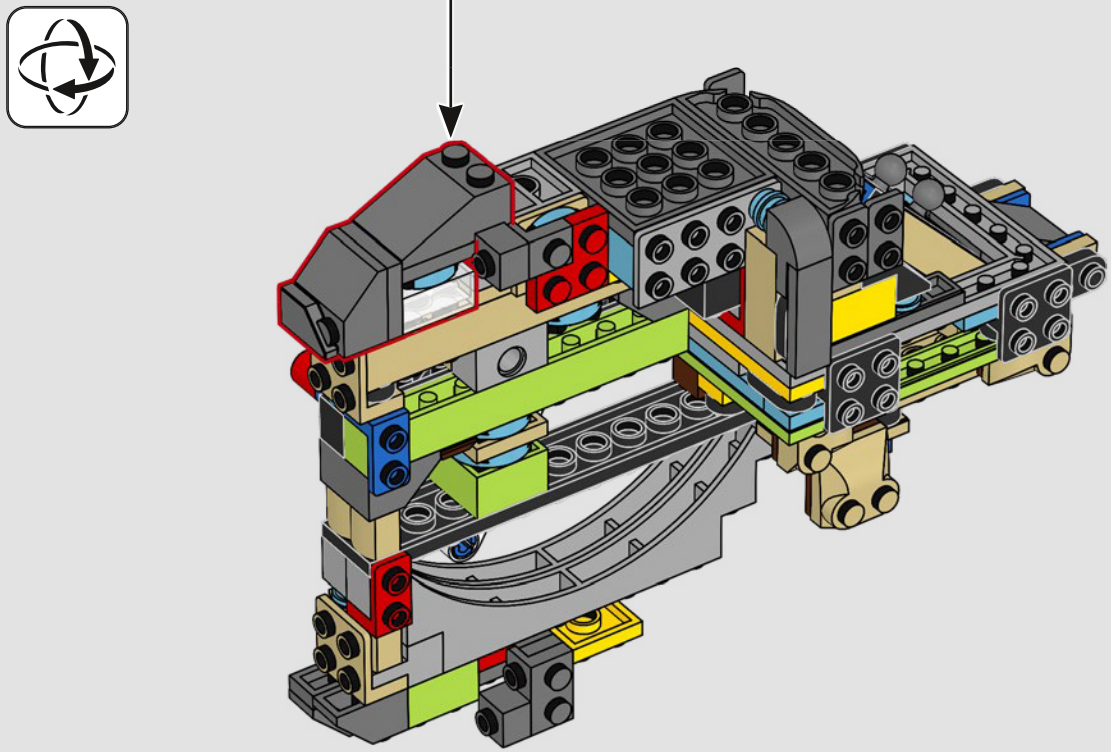

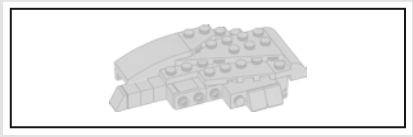

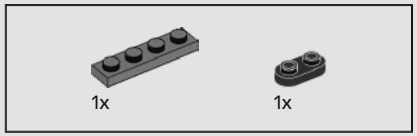


280

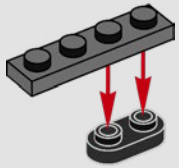

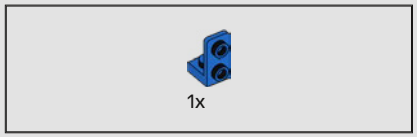


281

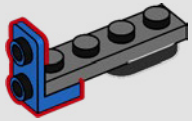

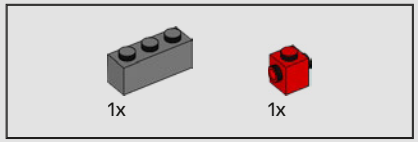


282

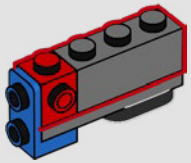

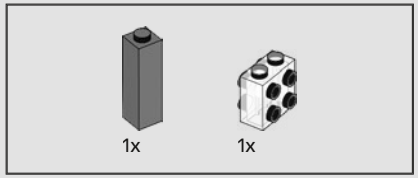


283

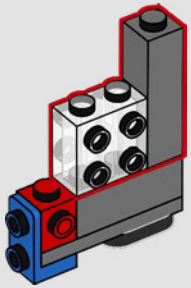

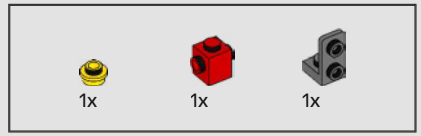


284

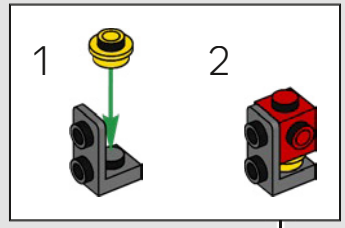


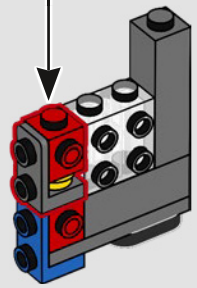

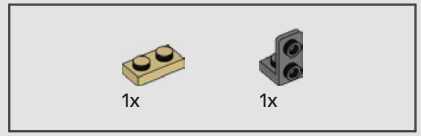


285

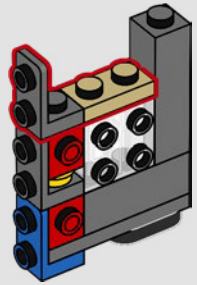

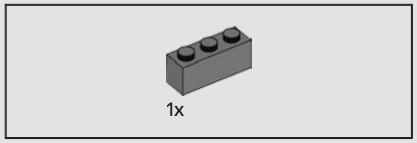


286

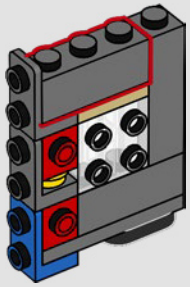

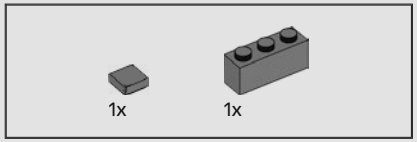


287

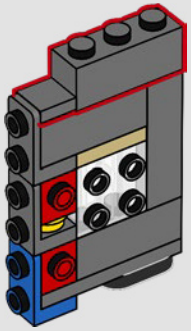

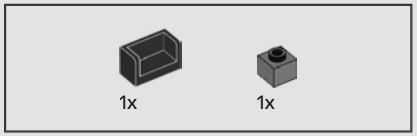


288

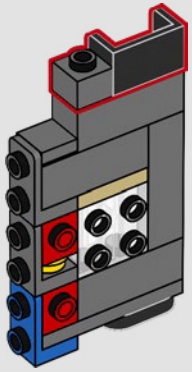

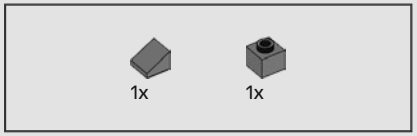


289

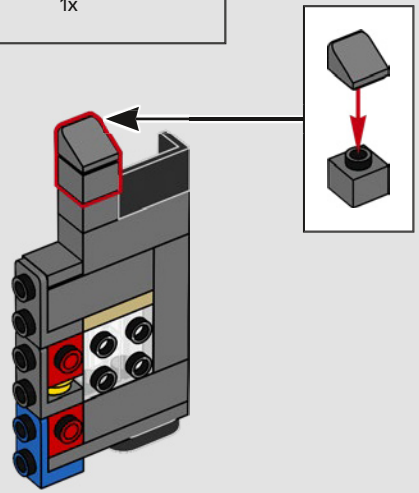

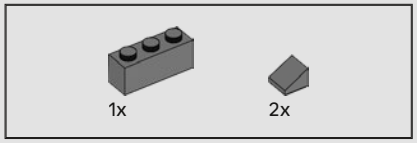


290

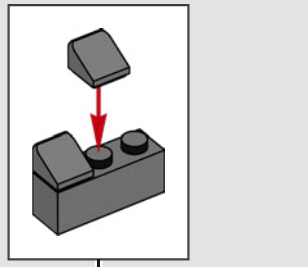

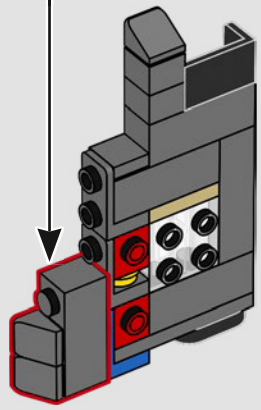

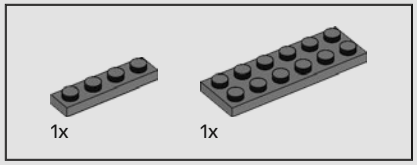


291

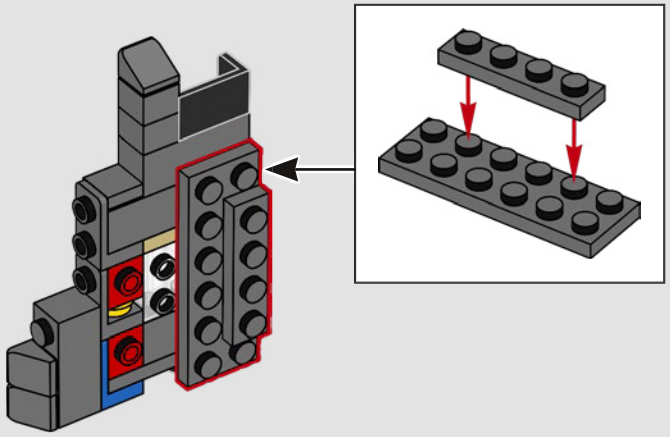

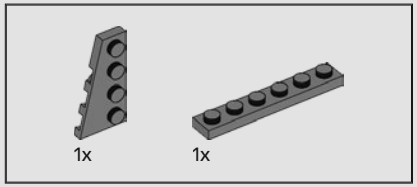


292

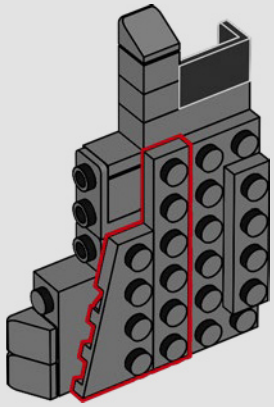

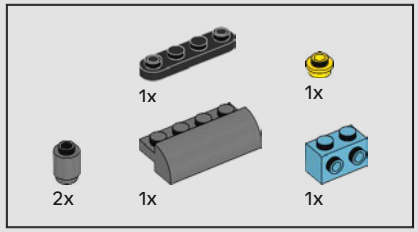


293

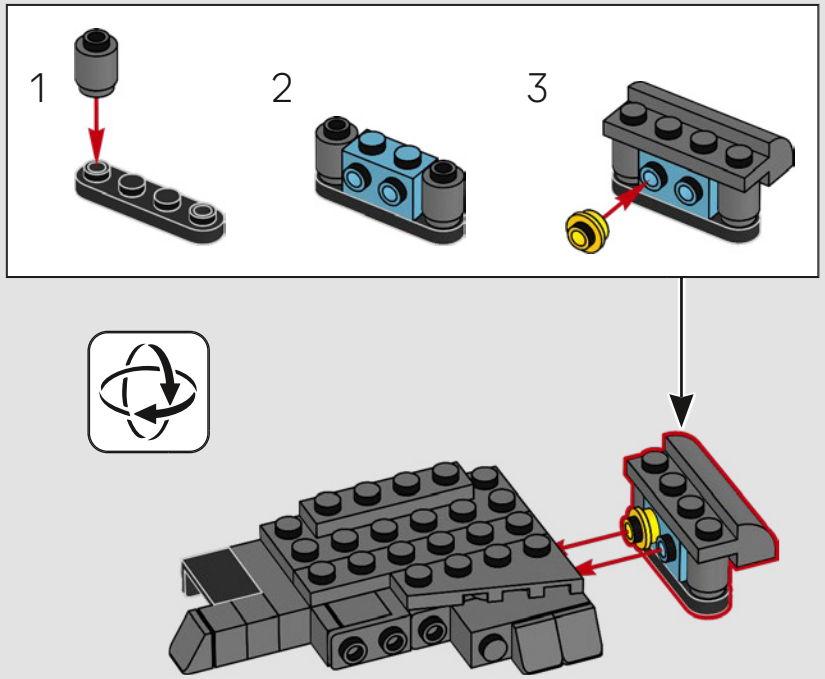

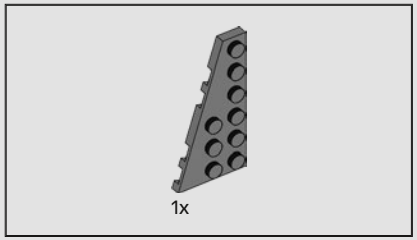


294

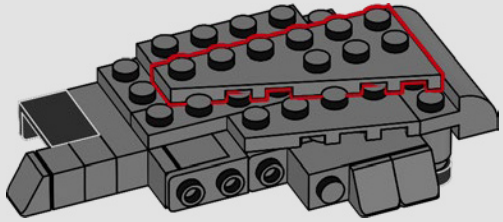

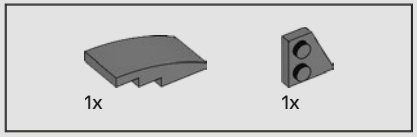


295

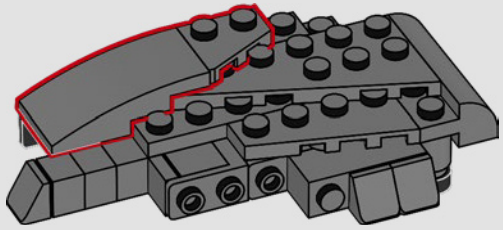

296

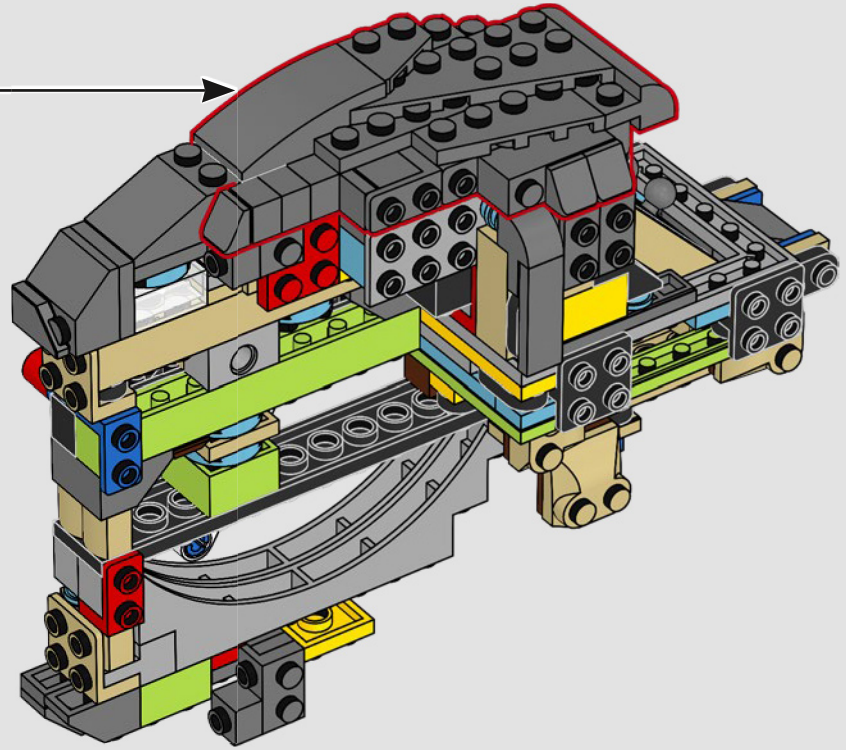

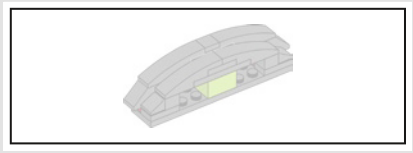

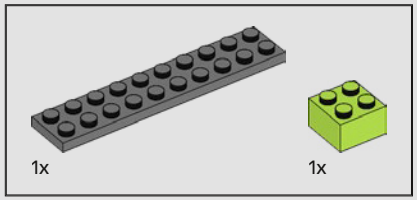


297

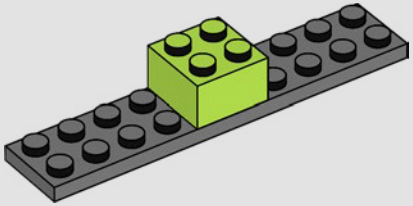

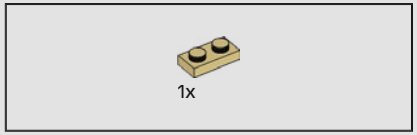


298

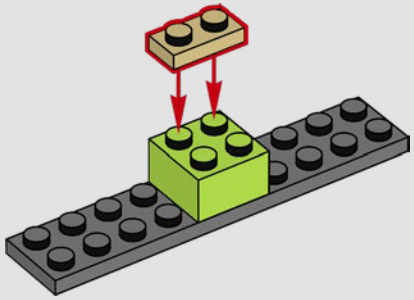

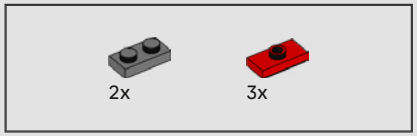


299

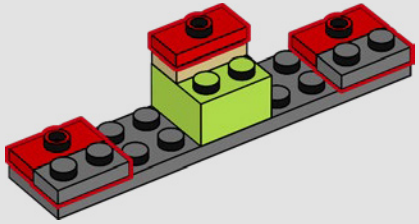

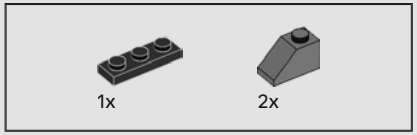


300

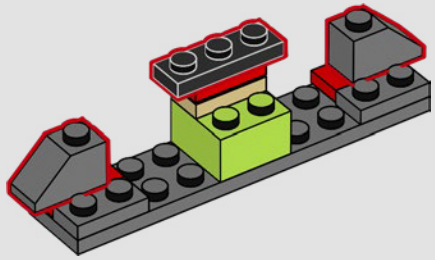

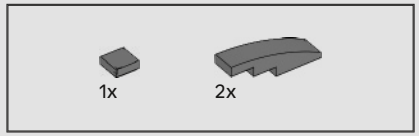


301

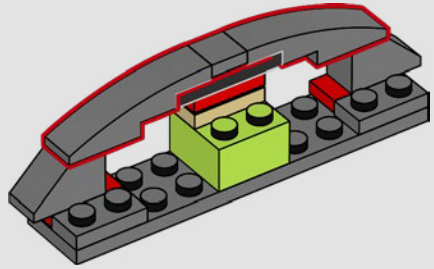

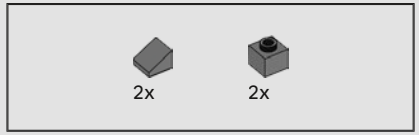


302

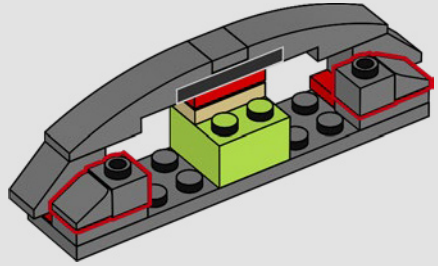

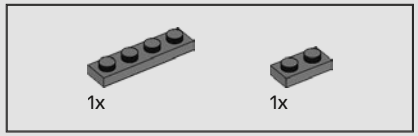


303

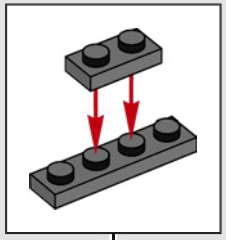

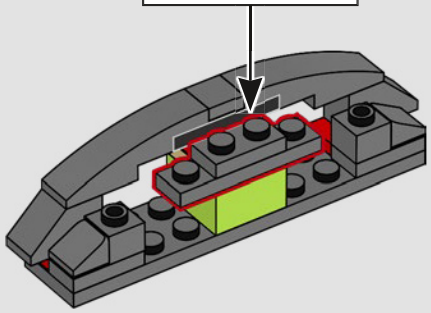

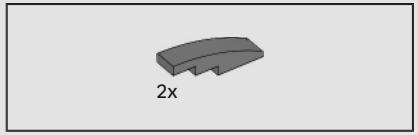


304

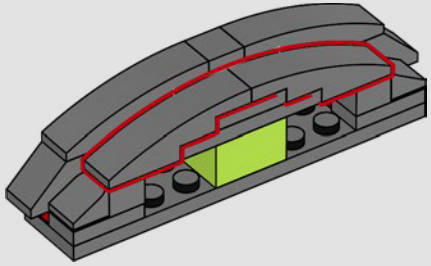

305

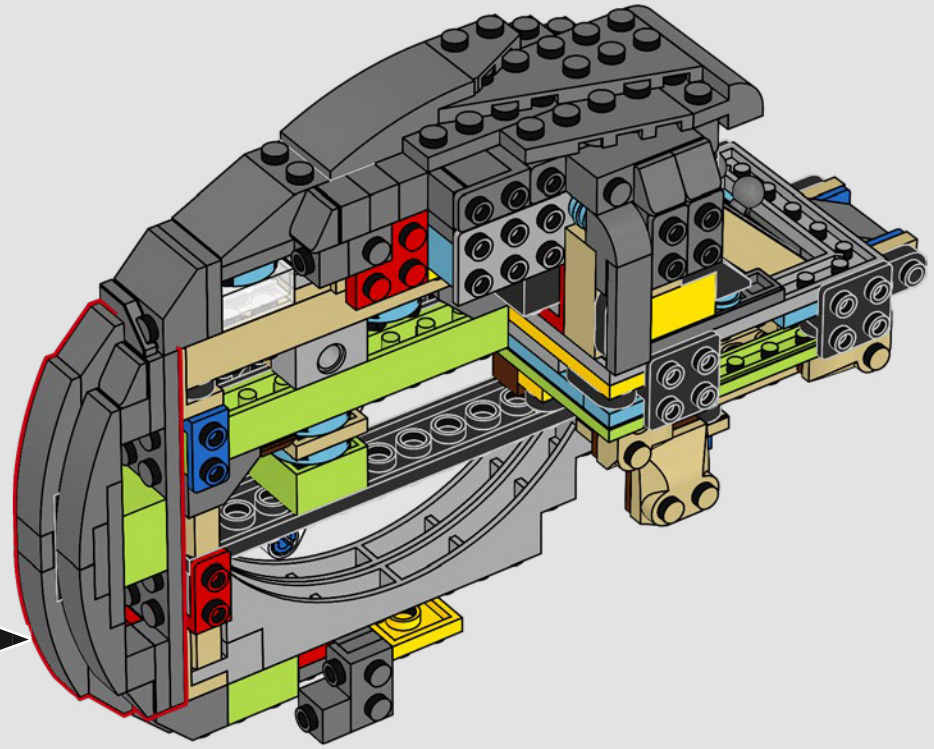

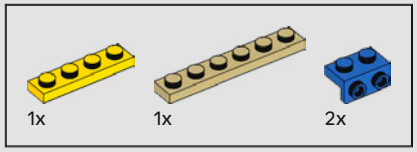


306

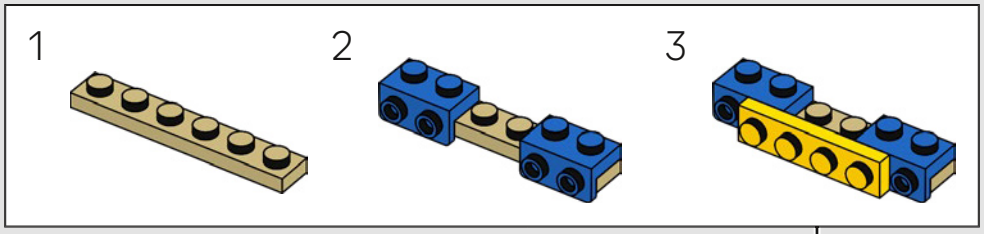


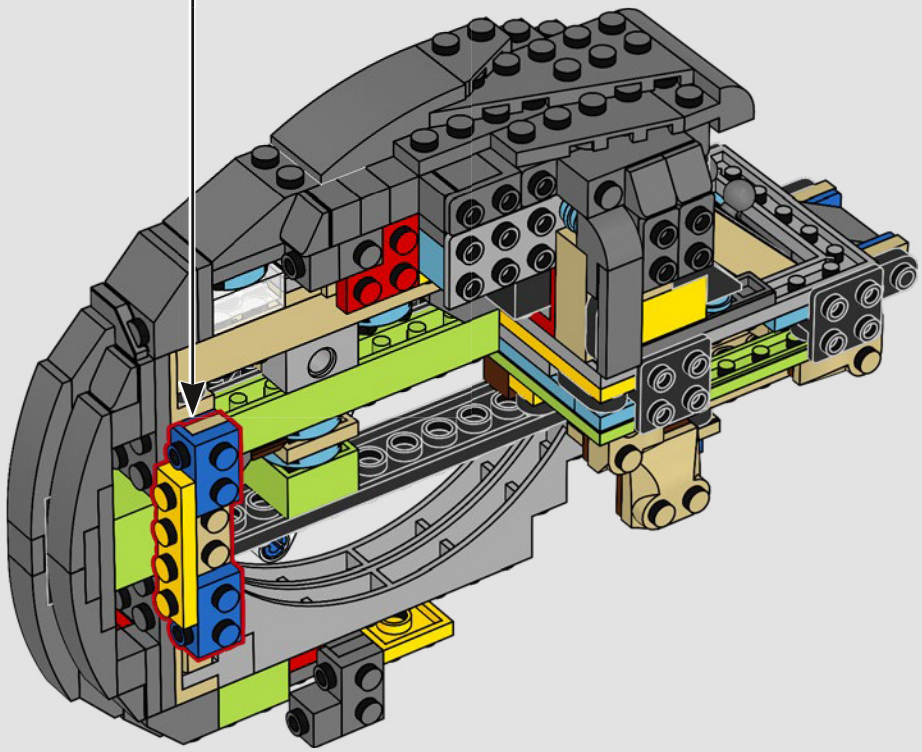

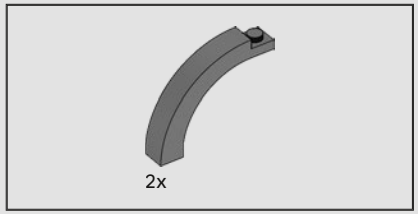


307

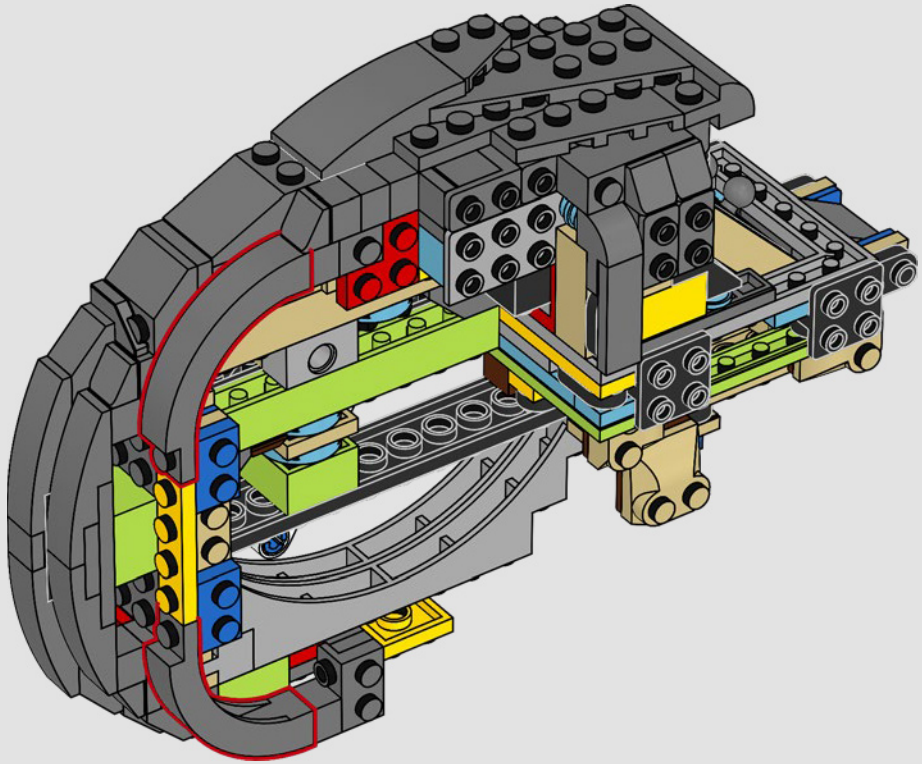

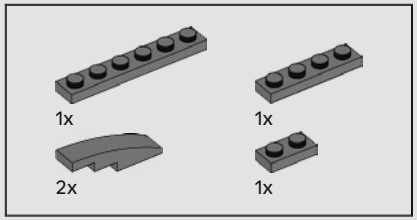


308

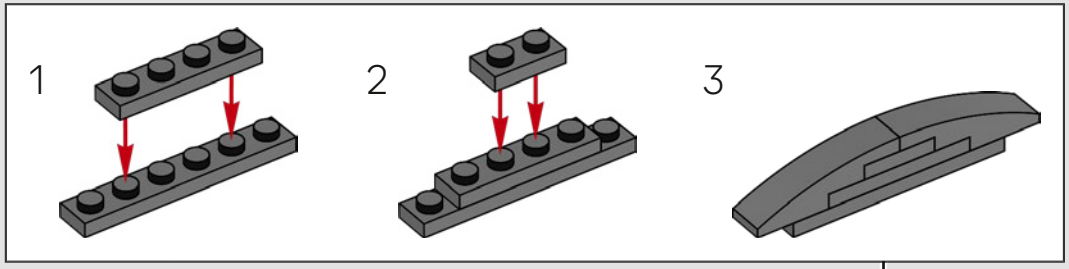


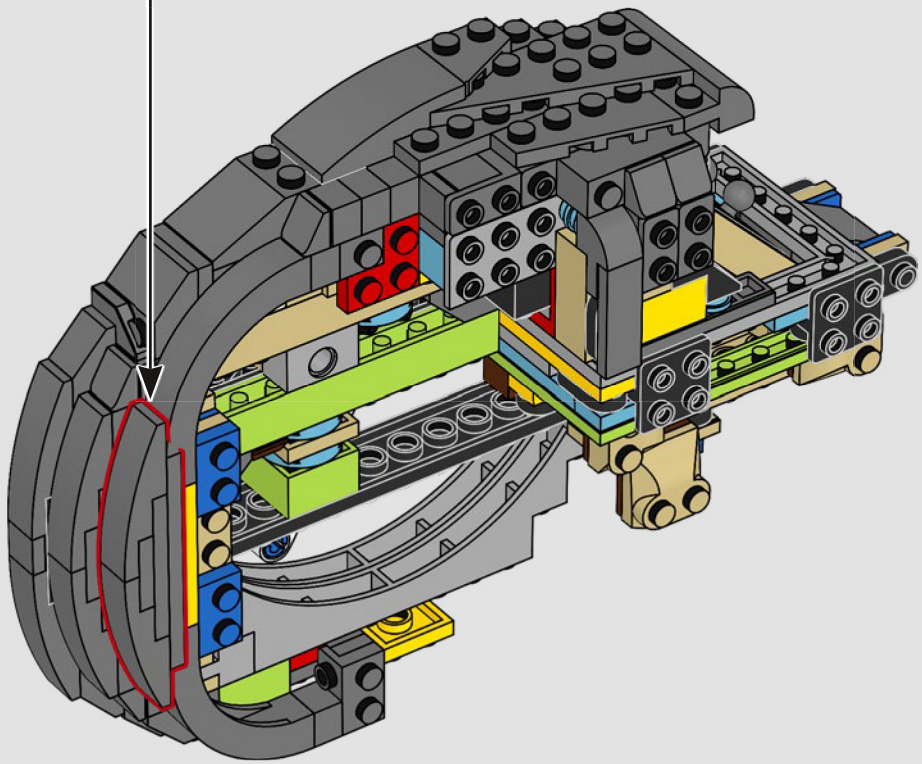

309

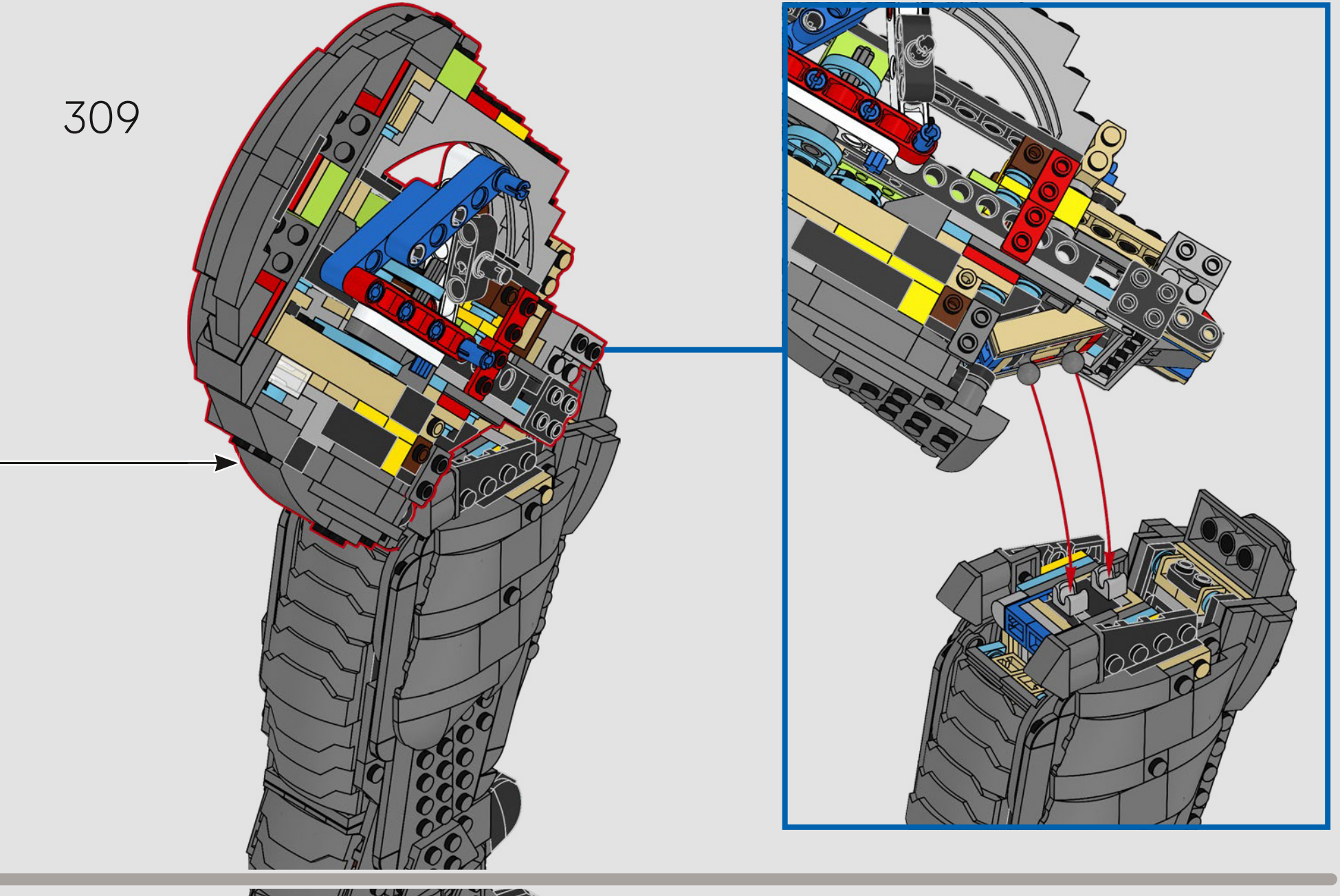




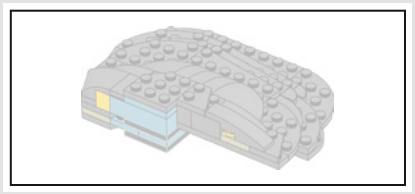

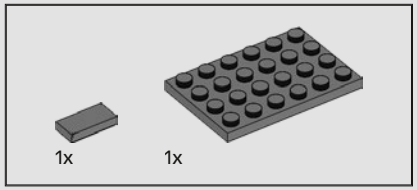


310

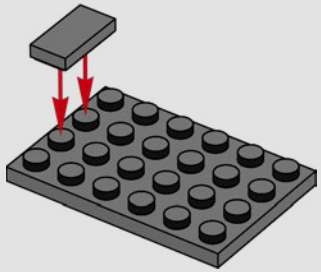

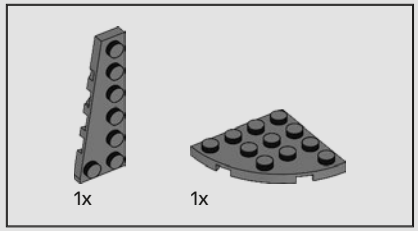


311

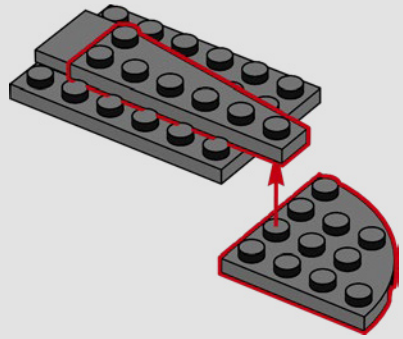

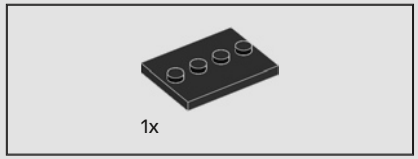


312

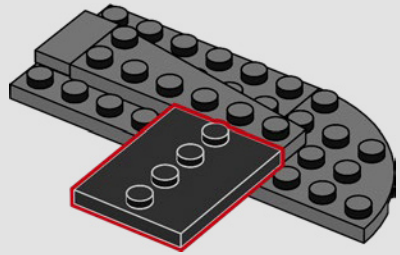

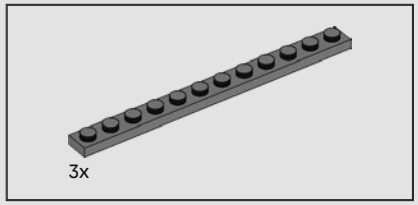


313

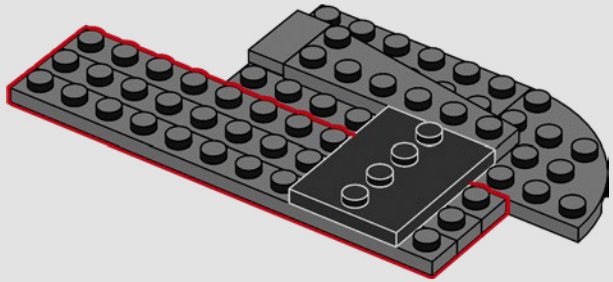

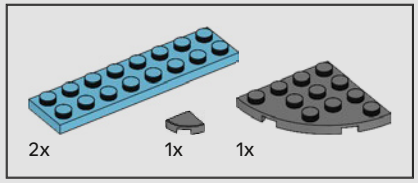


314

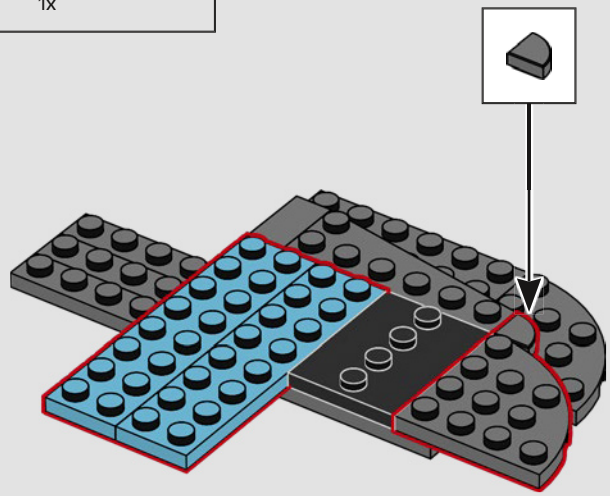

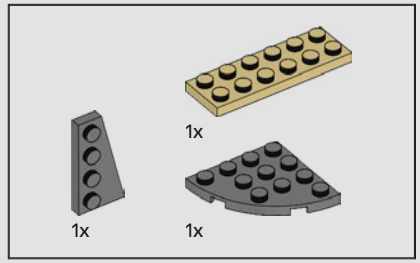


315

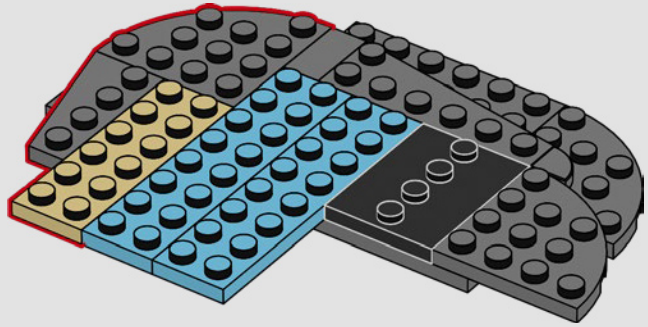

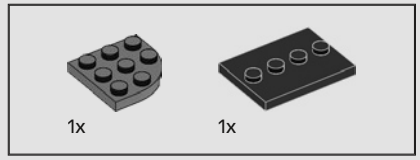


316

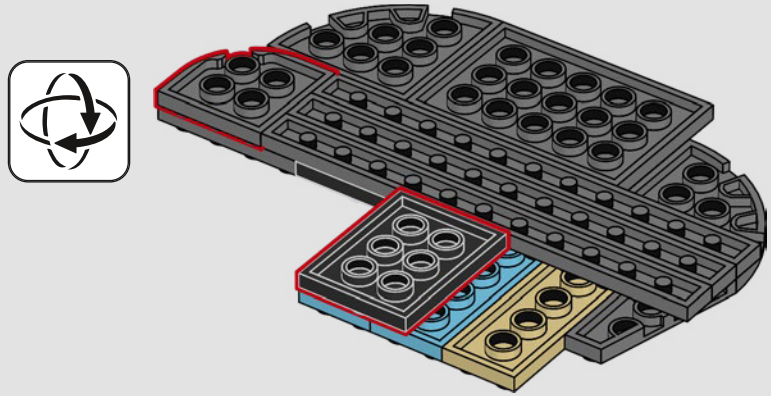

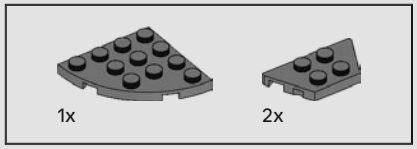


317

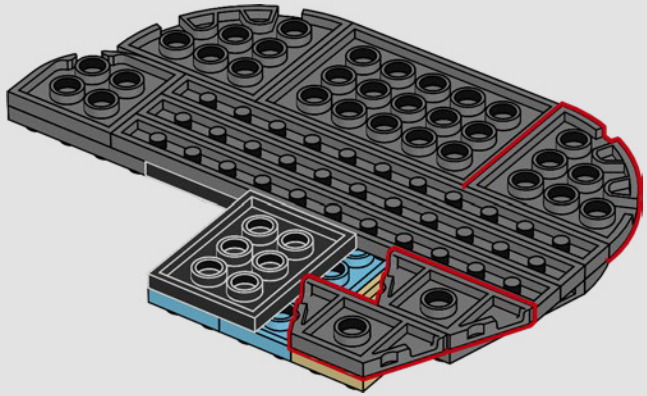

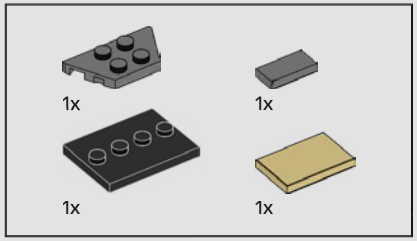


318



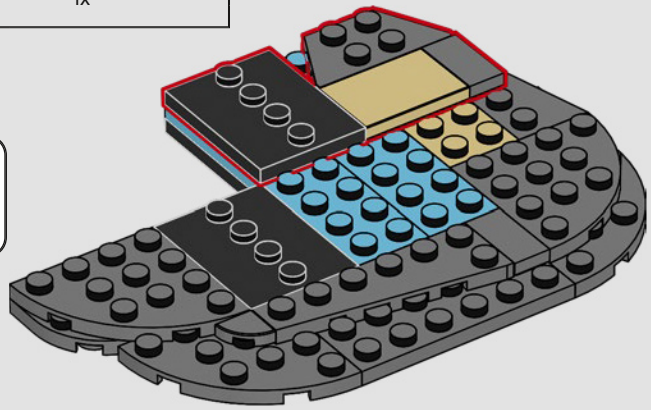

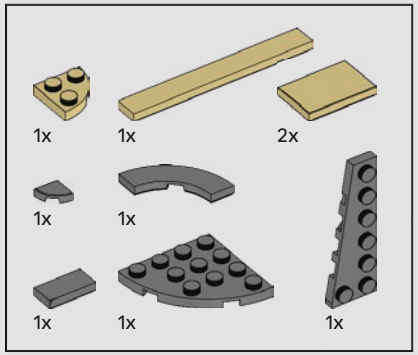


319

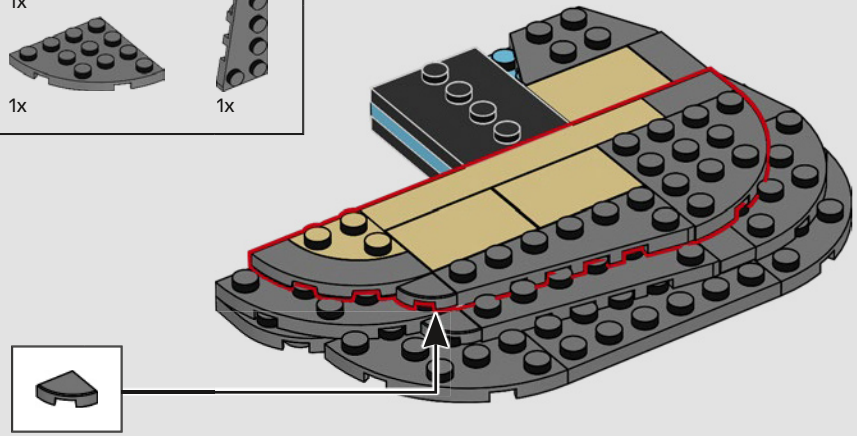

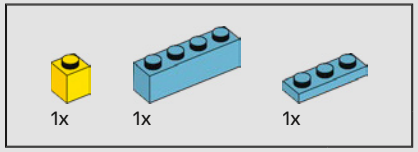


320

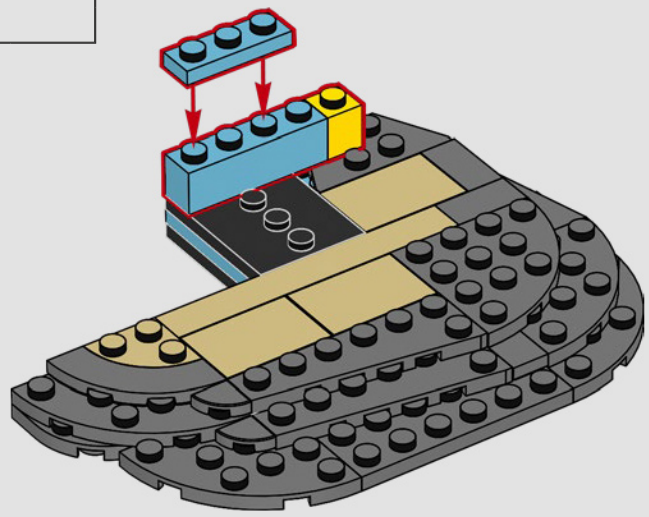

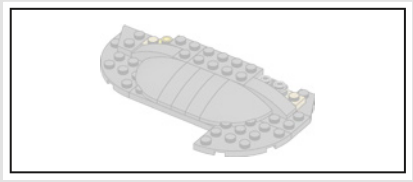

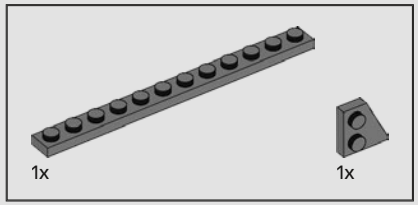


321

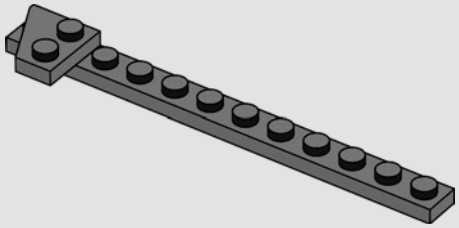

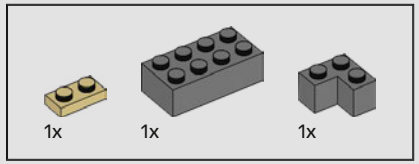


322

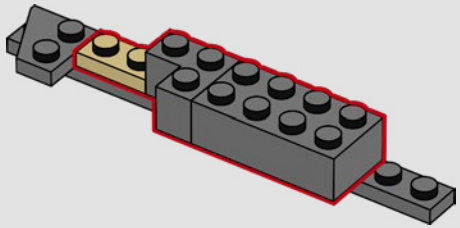

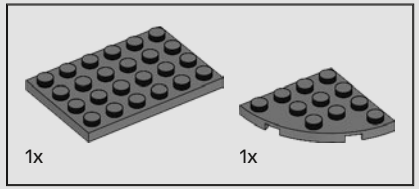


323

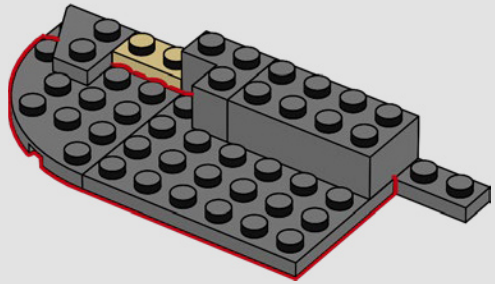

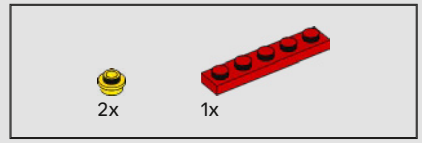


324

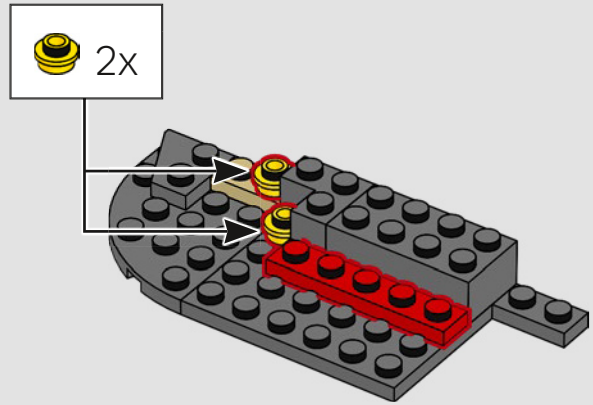





325

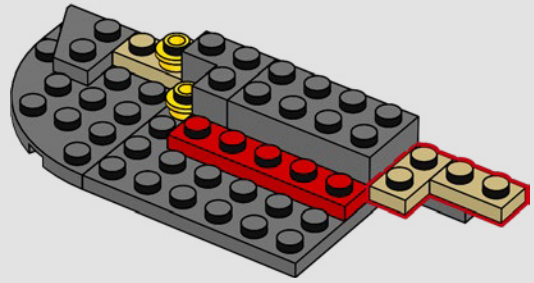




326

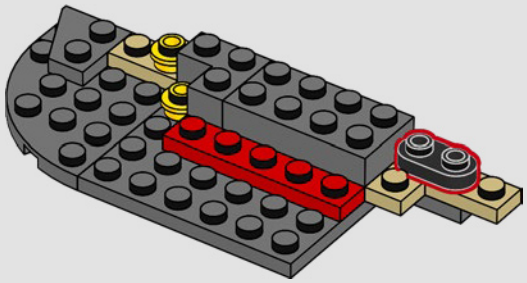

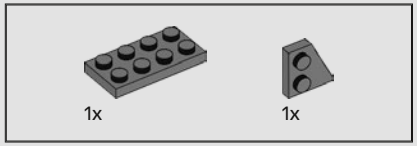


327

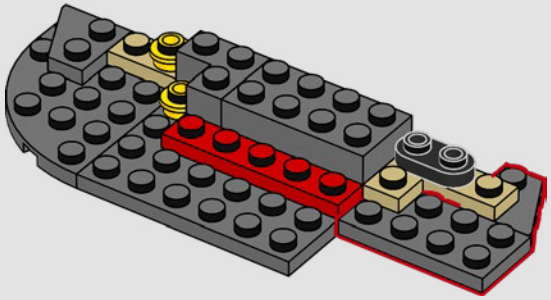

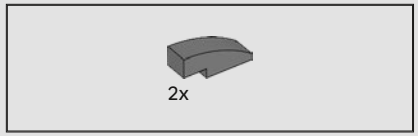


328

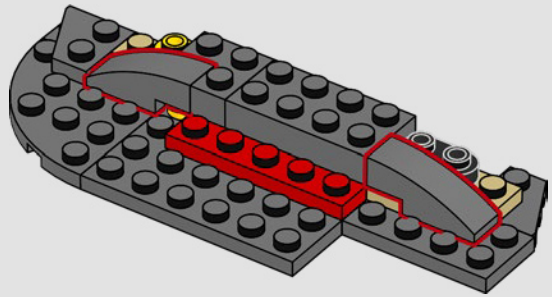

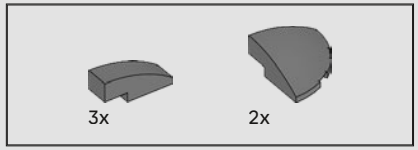


329

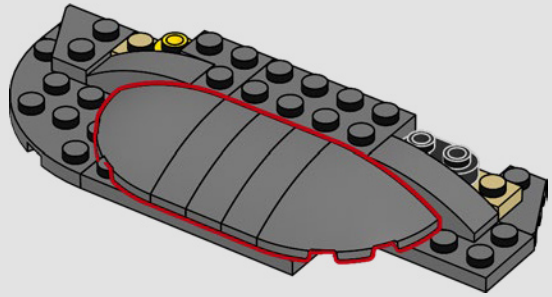

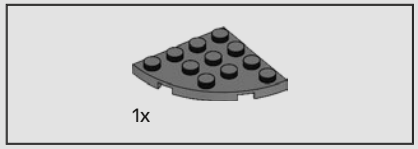


330

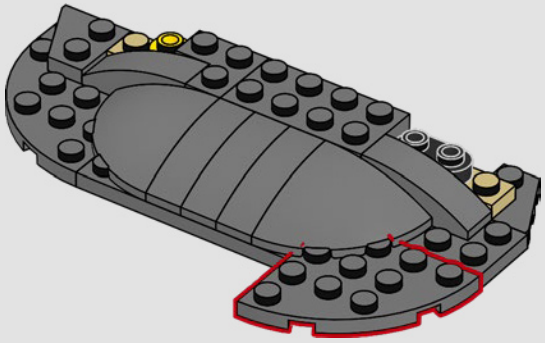

331

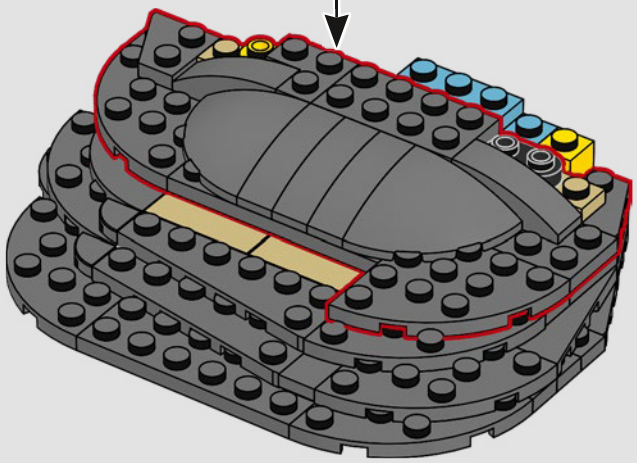

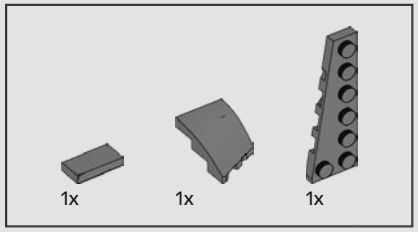


332

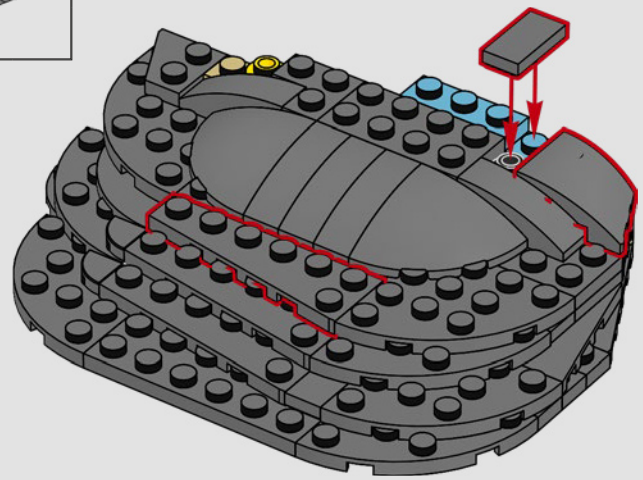

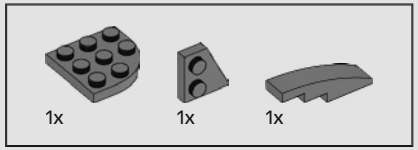


333

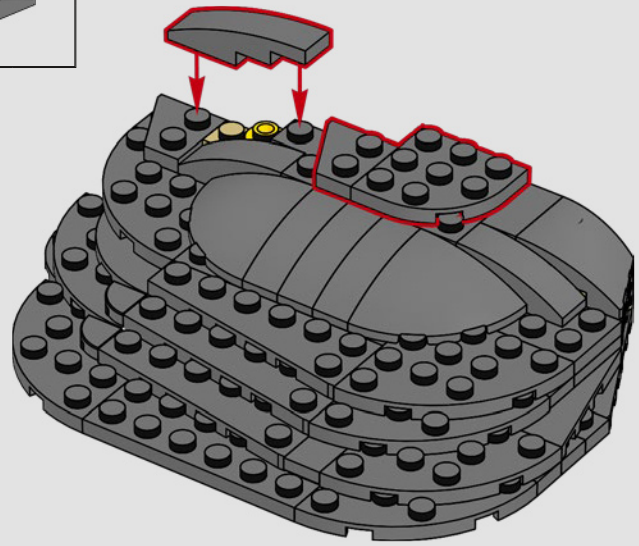

334

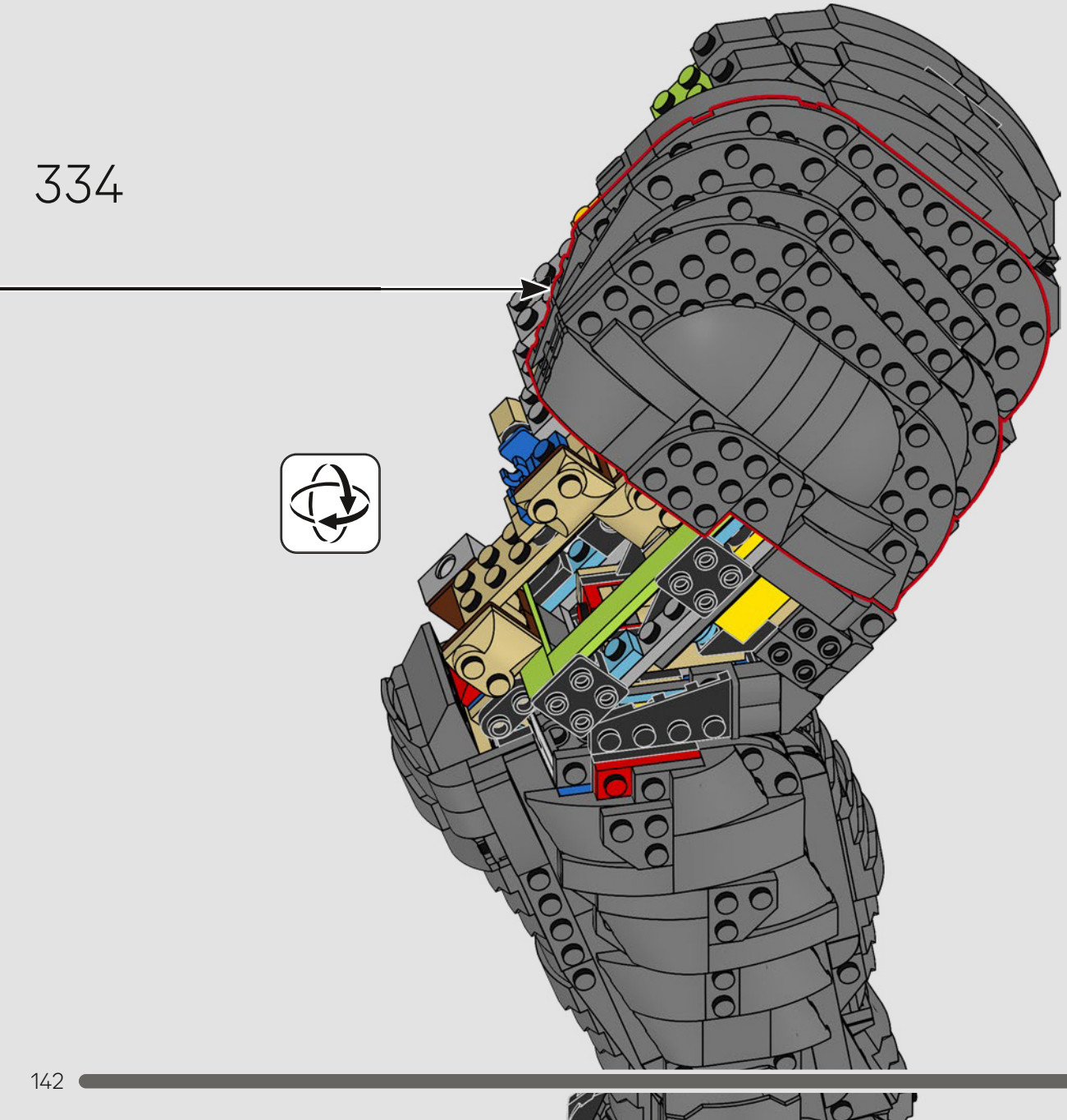




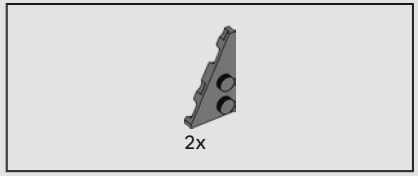


335

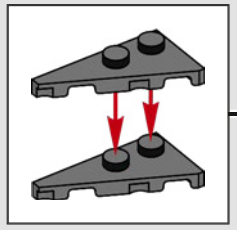

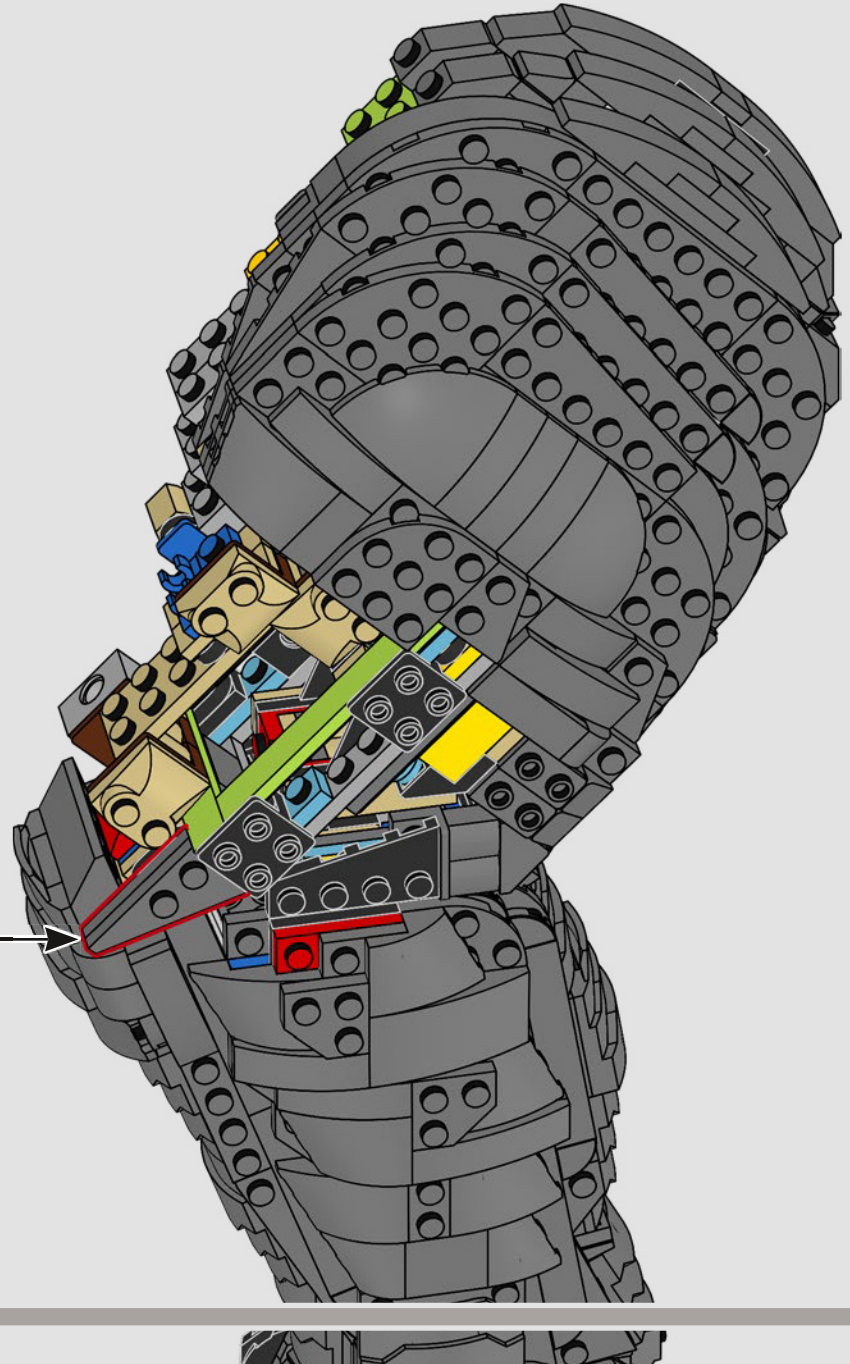

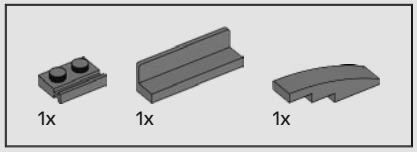


336

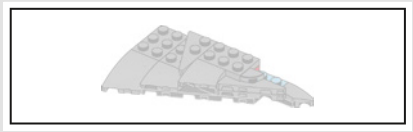

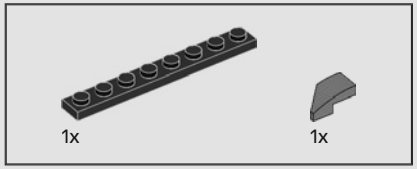


337

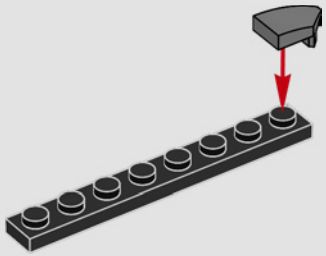

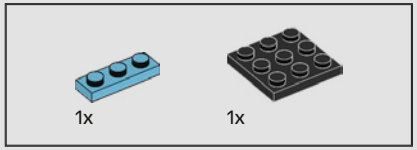


338

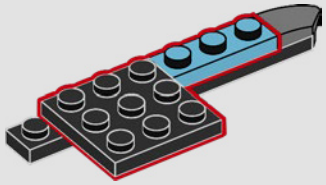

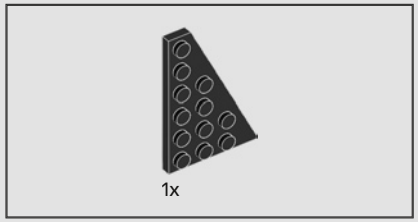


339

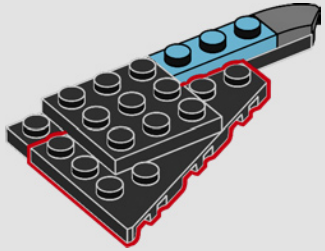

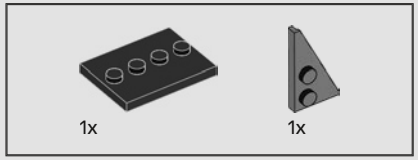


340

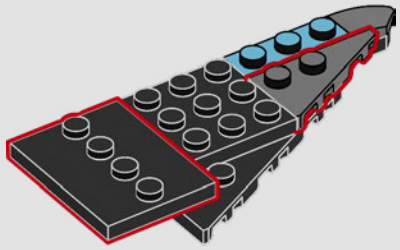

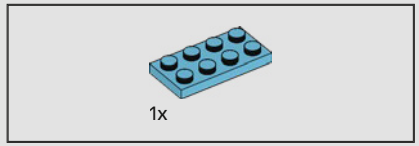


341



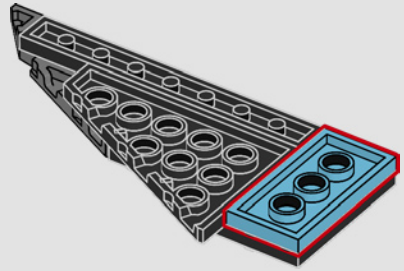

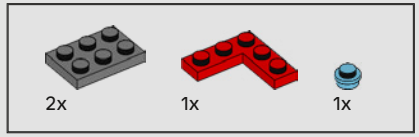


342



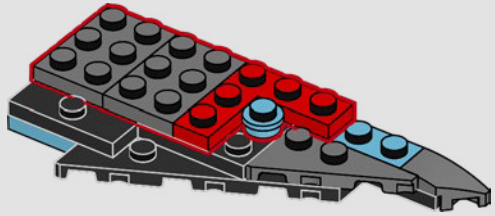

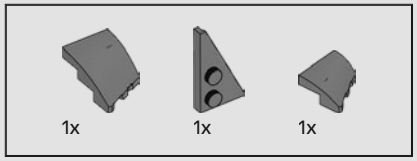


343

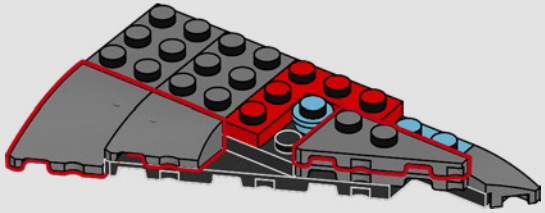

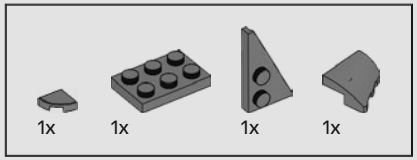


344

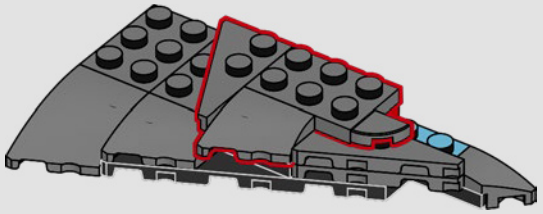

345

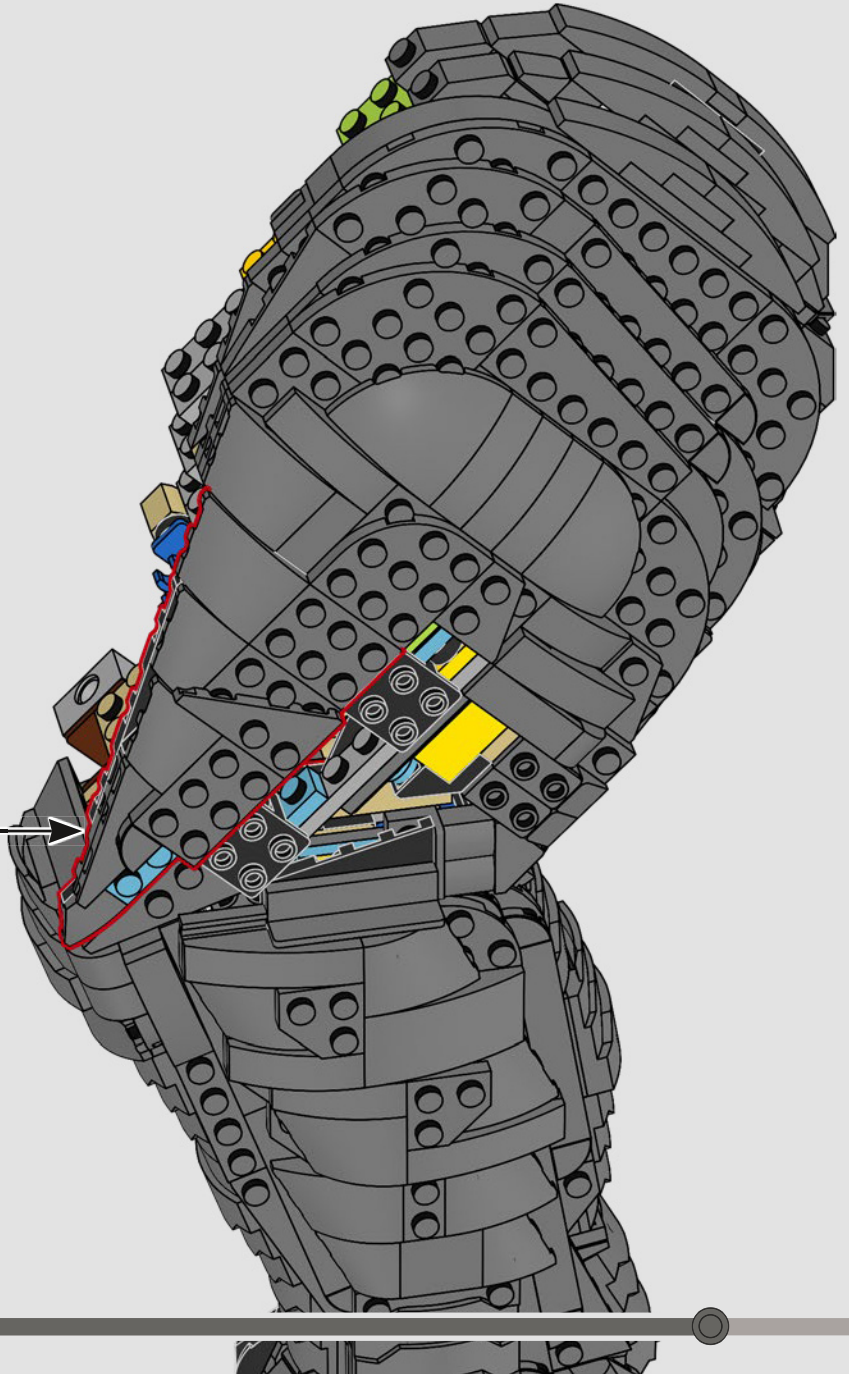

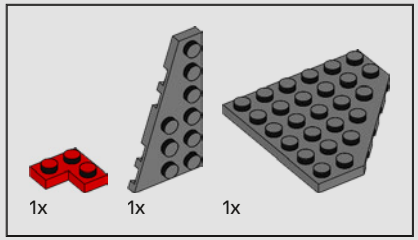


346

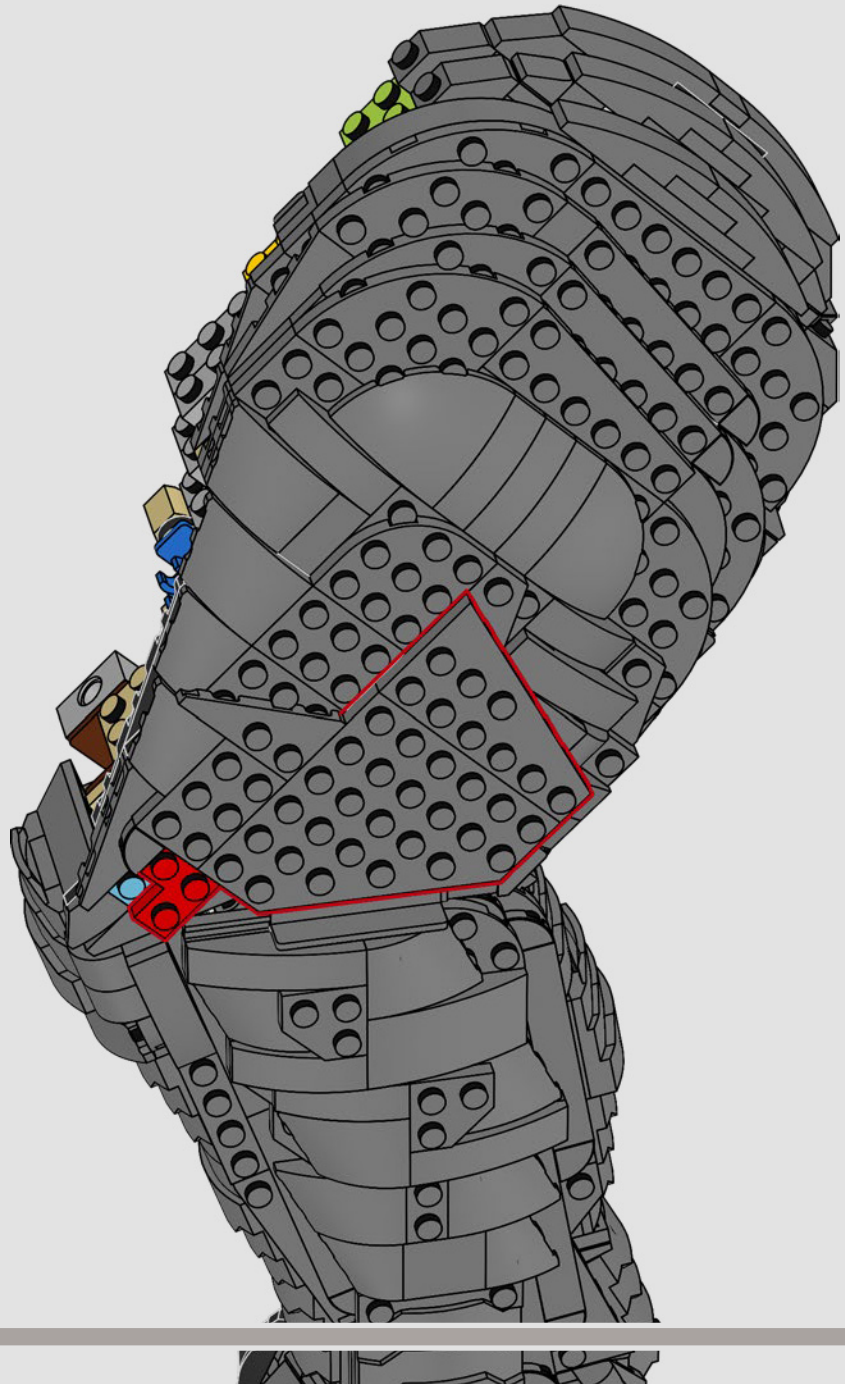

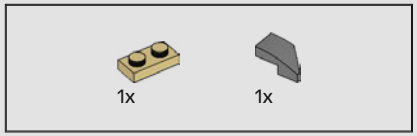


347

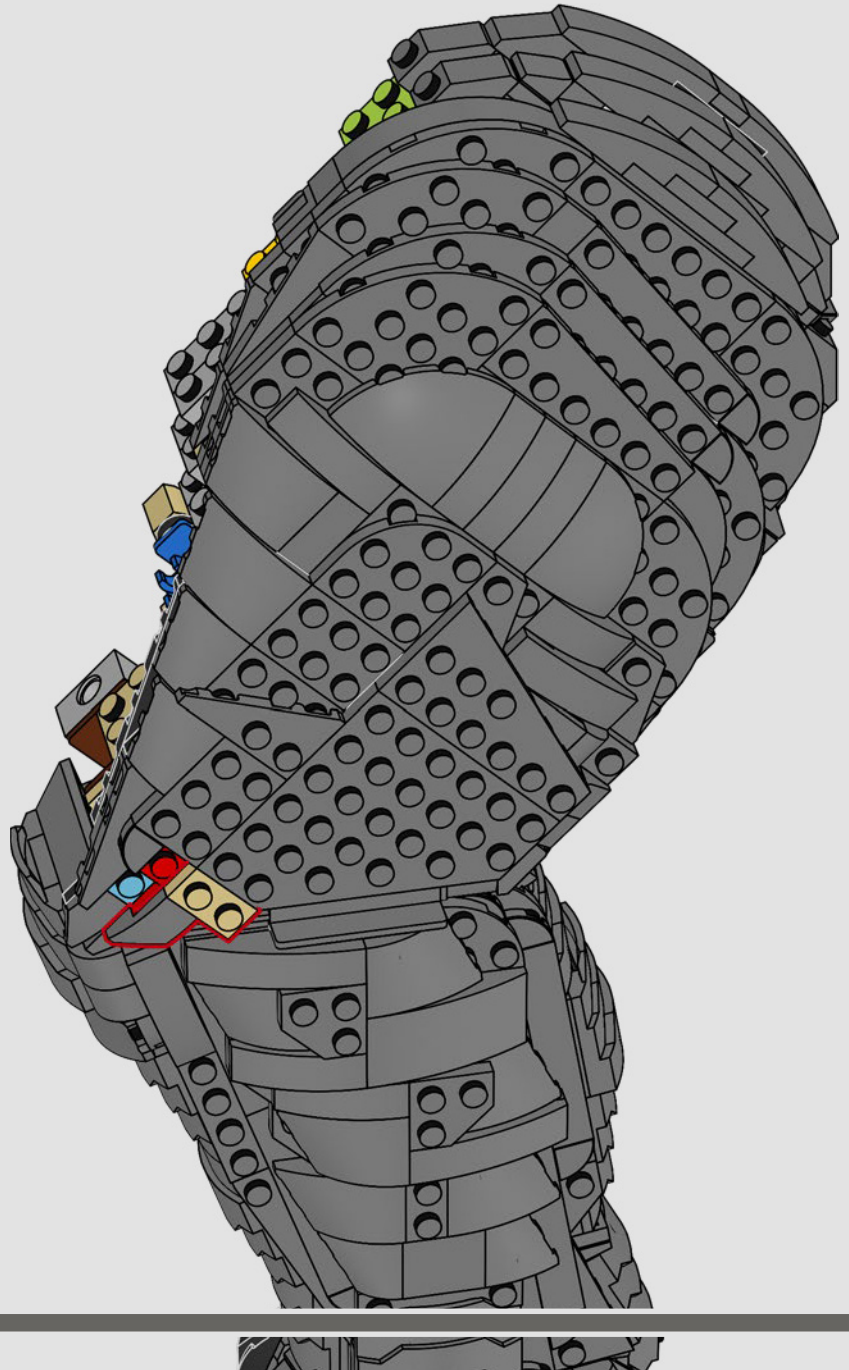

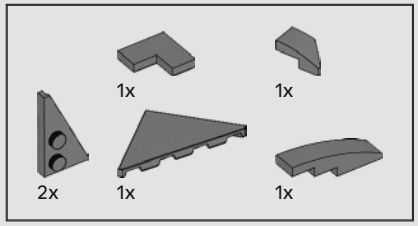


348

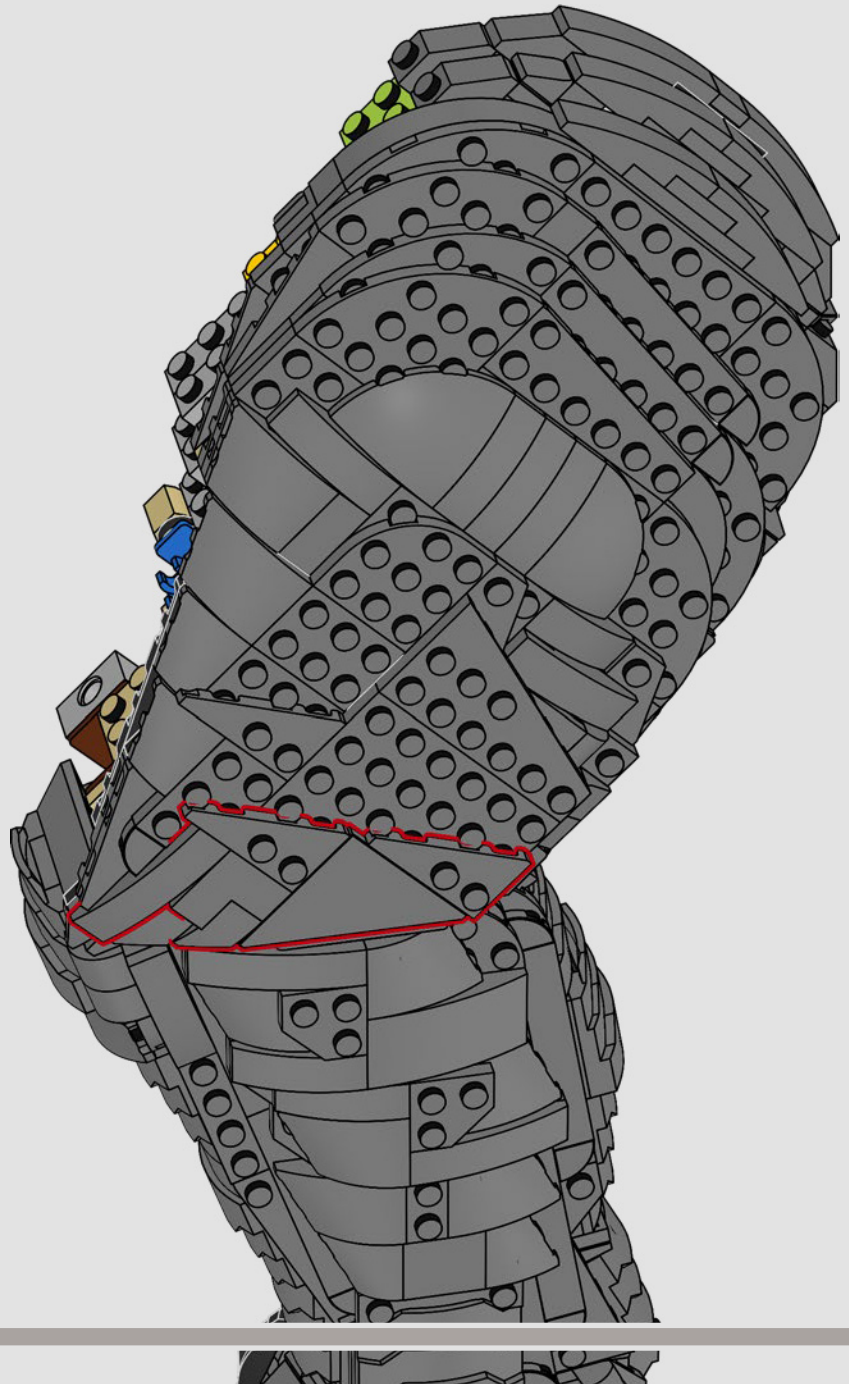

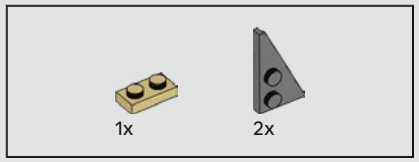


349



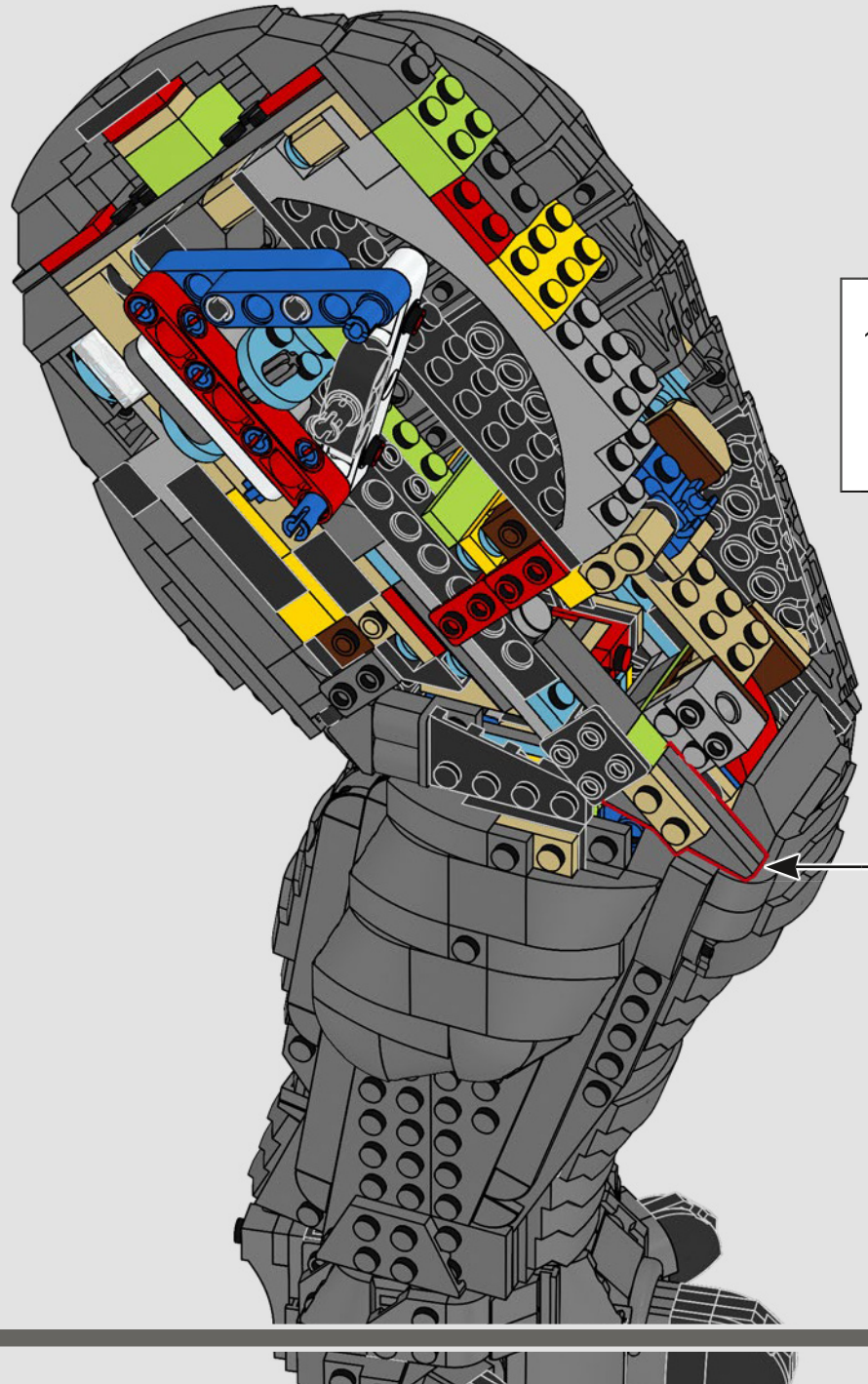

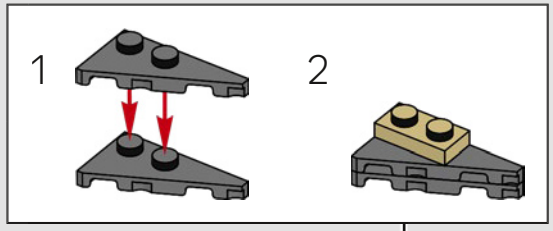

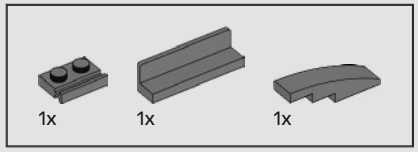


350

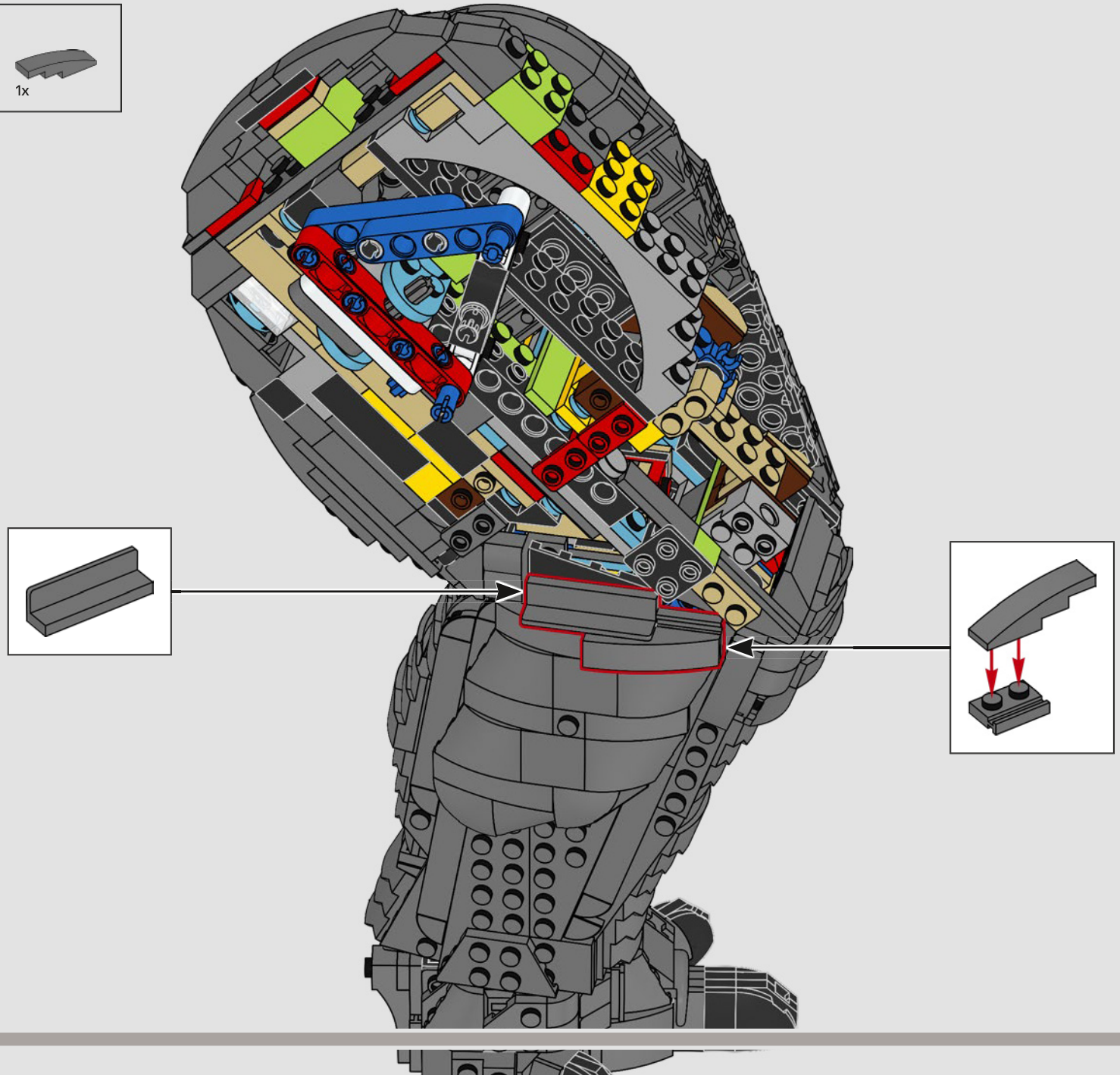

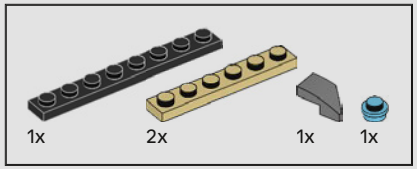


351

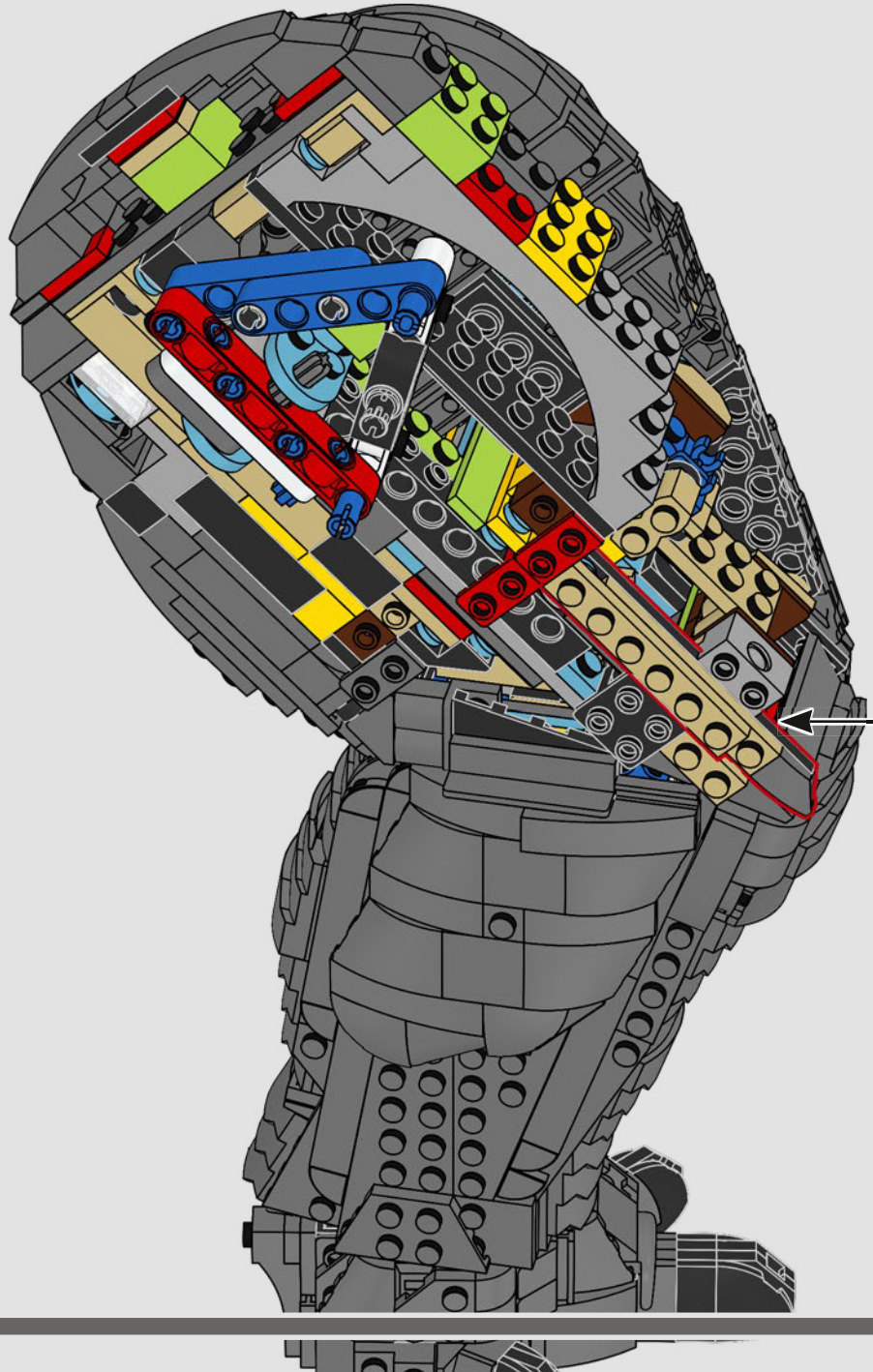

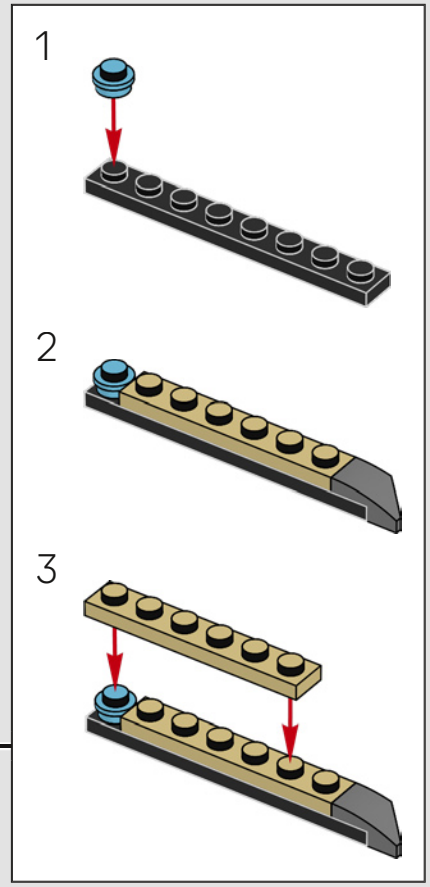

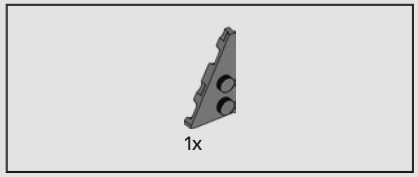


352

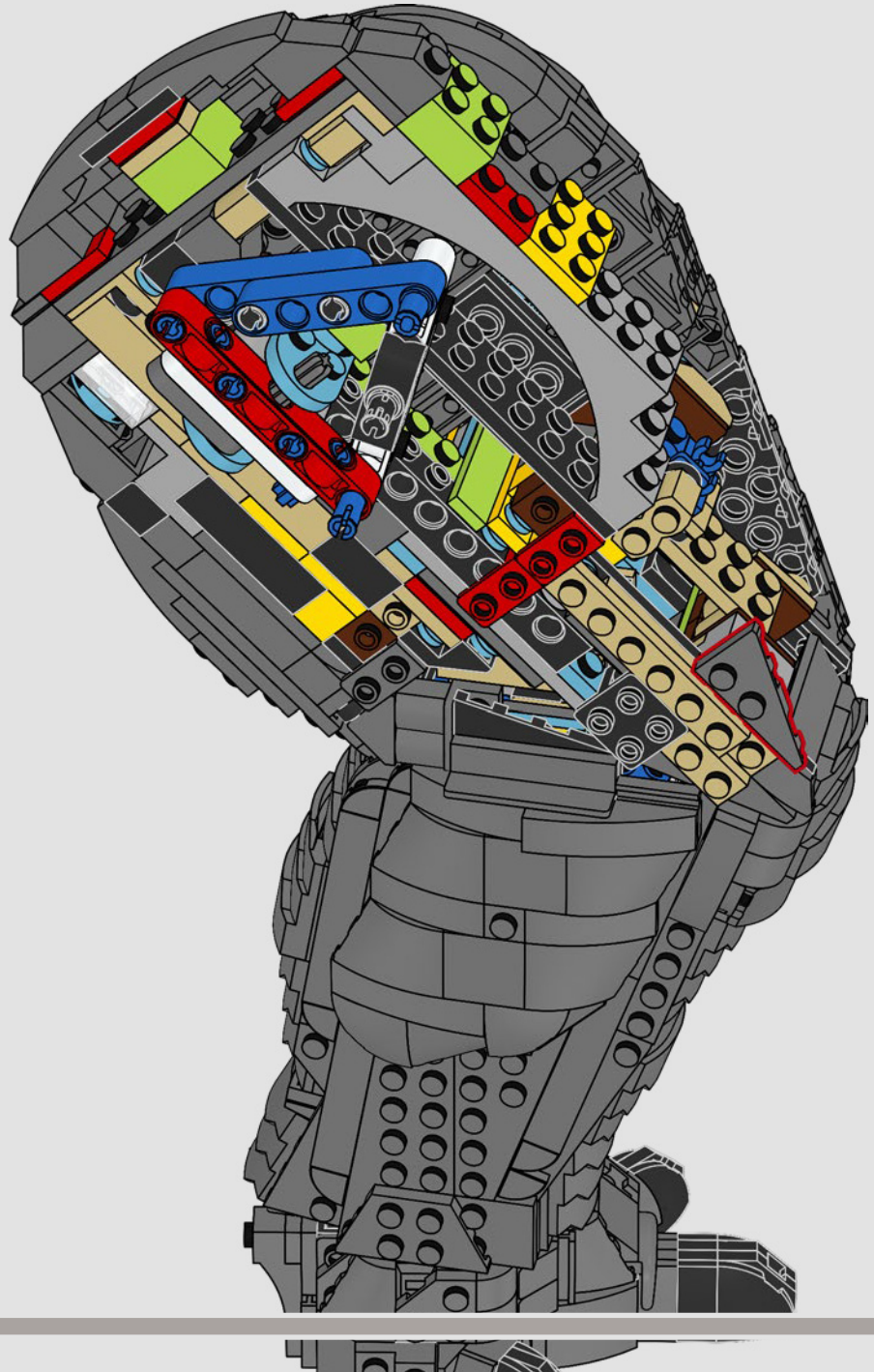

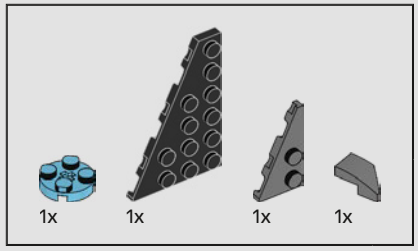


353

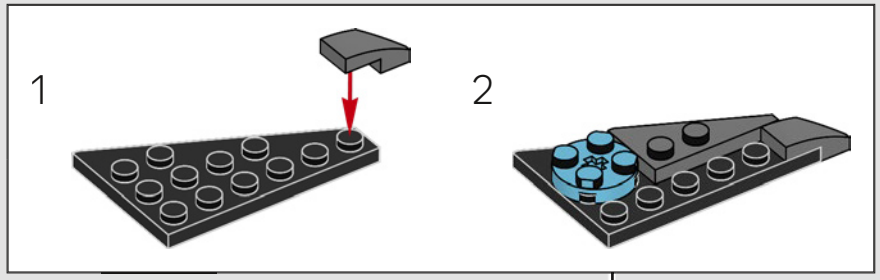


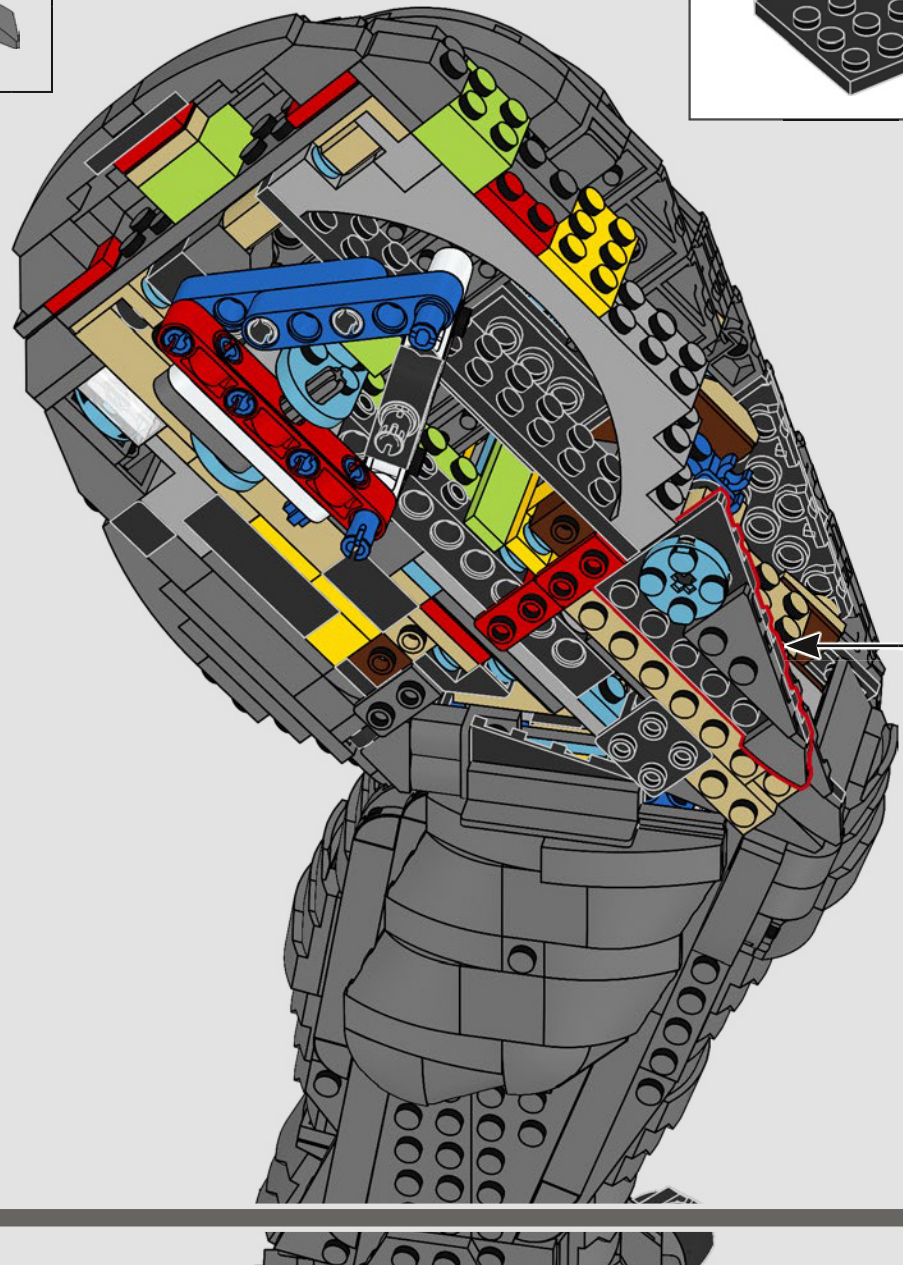

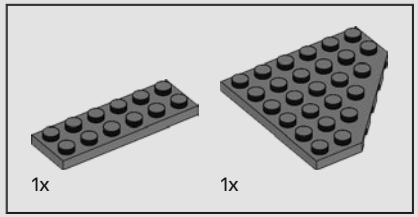


354

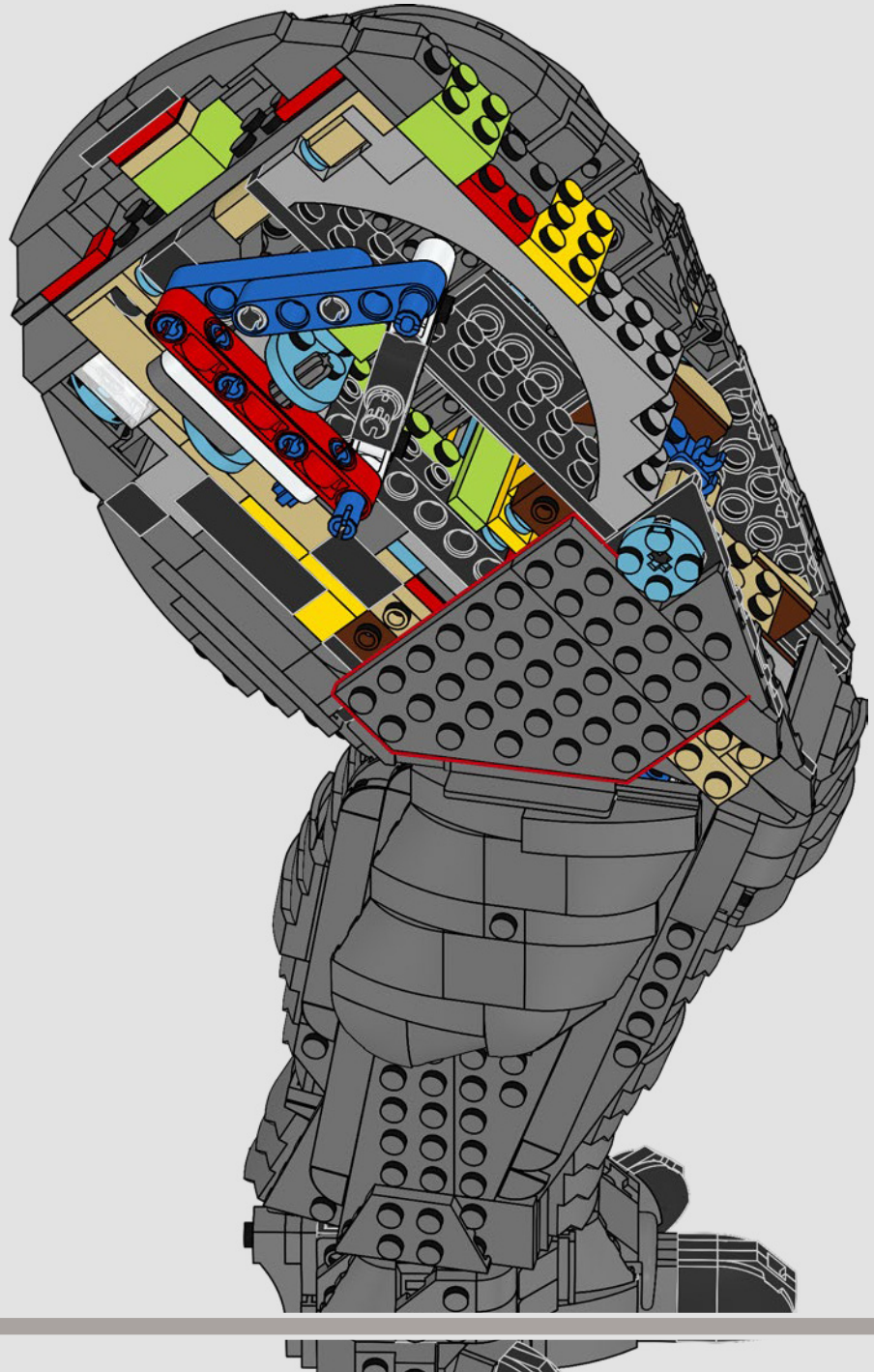

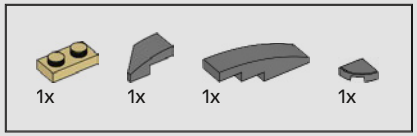


355

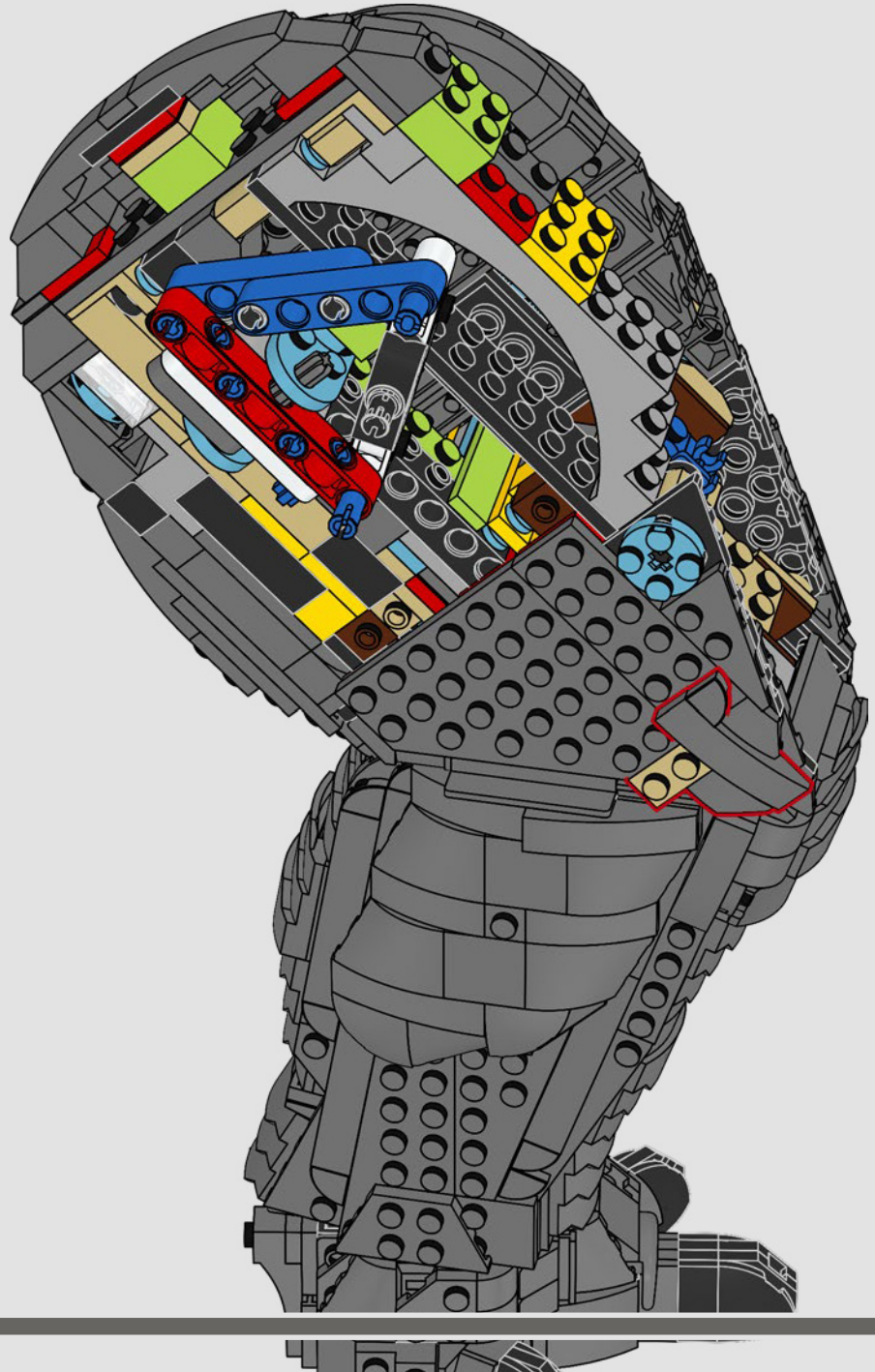

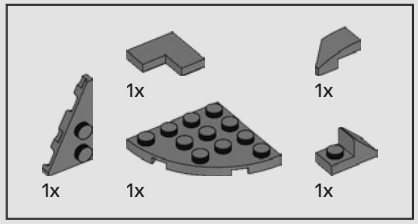


356

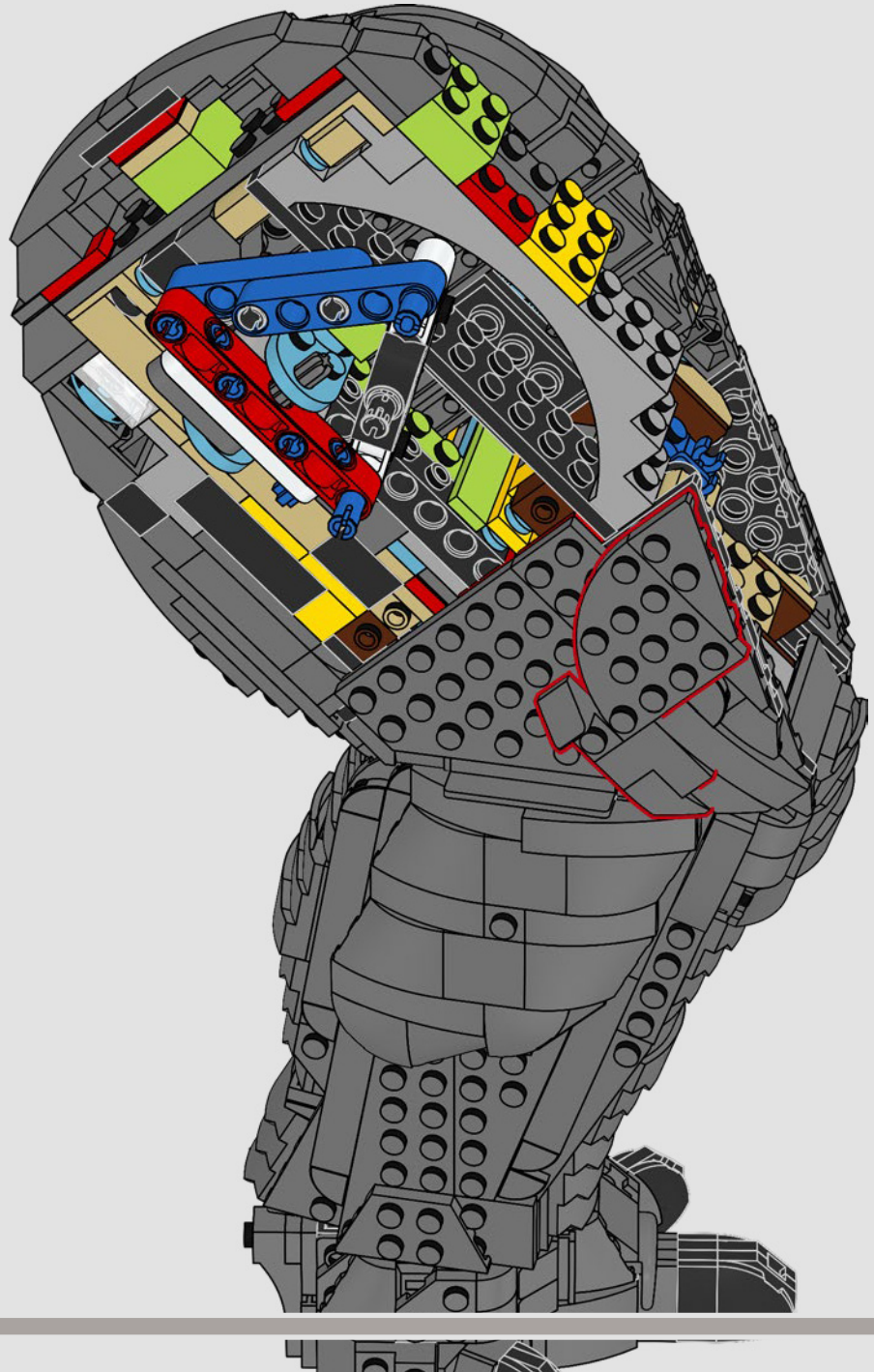

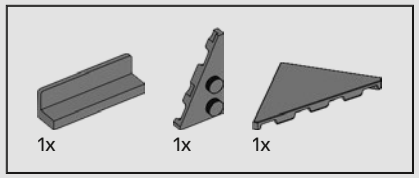


357

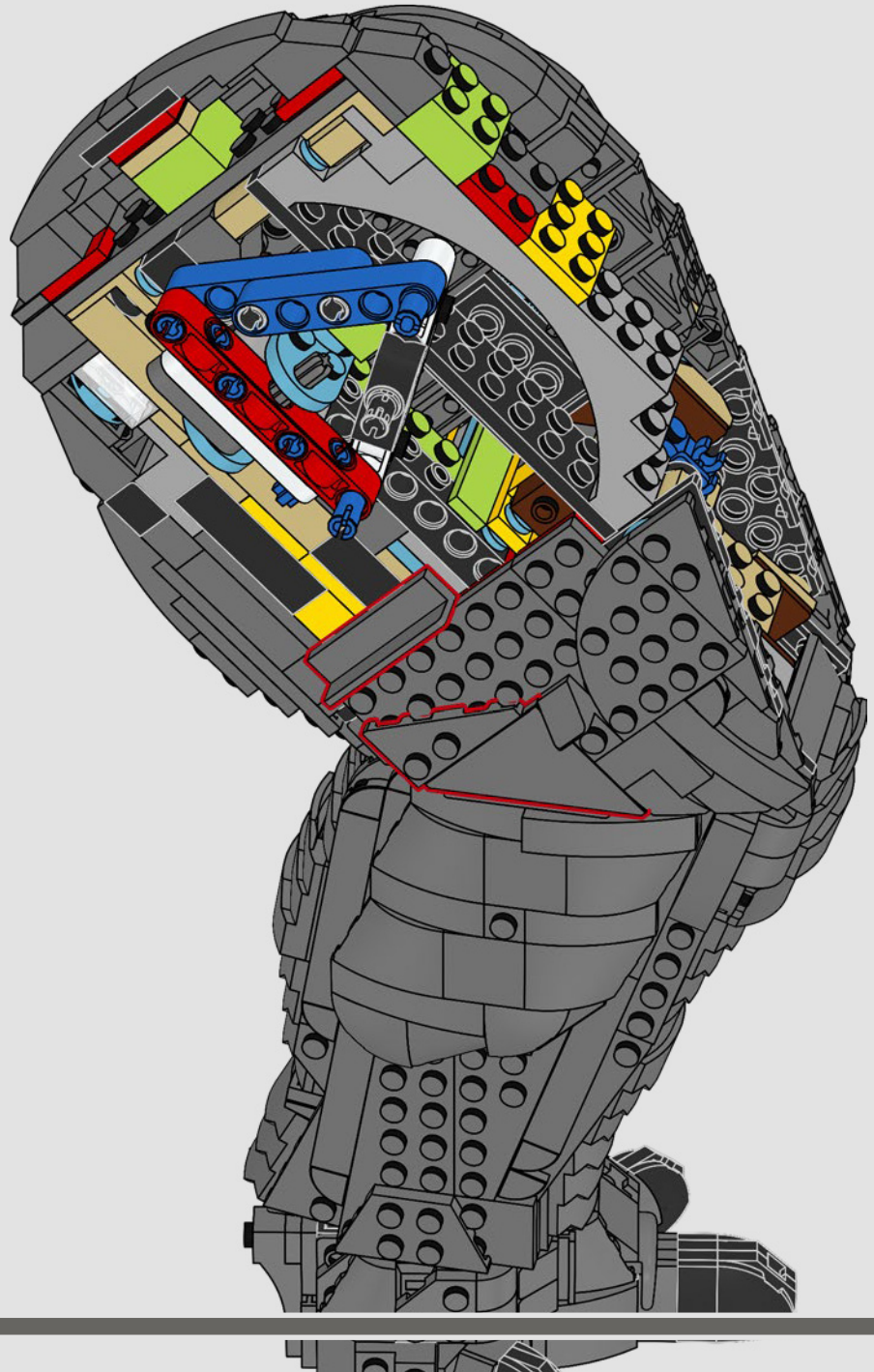

358

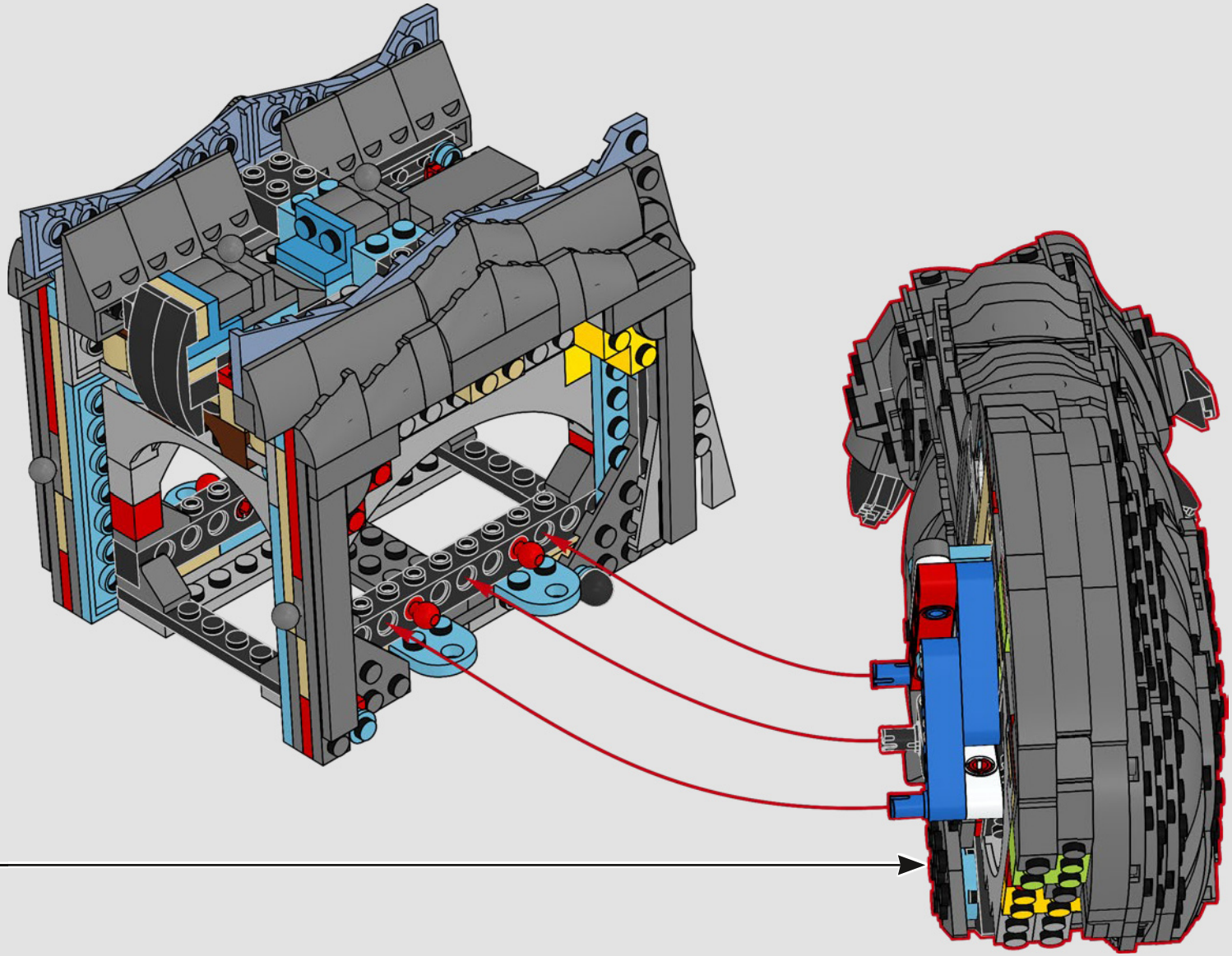

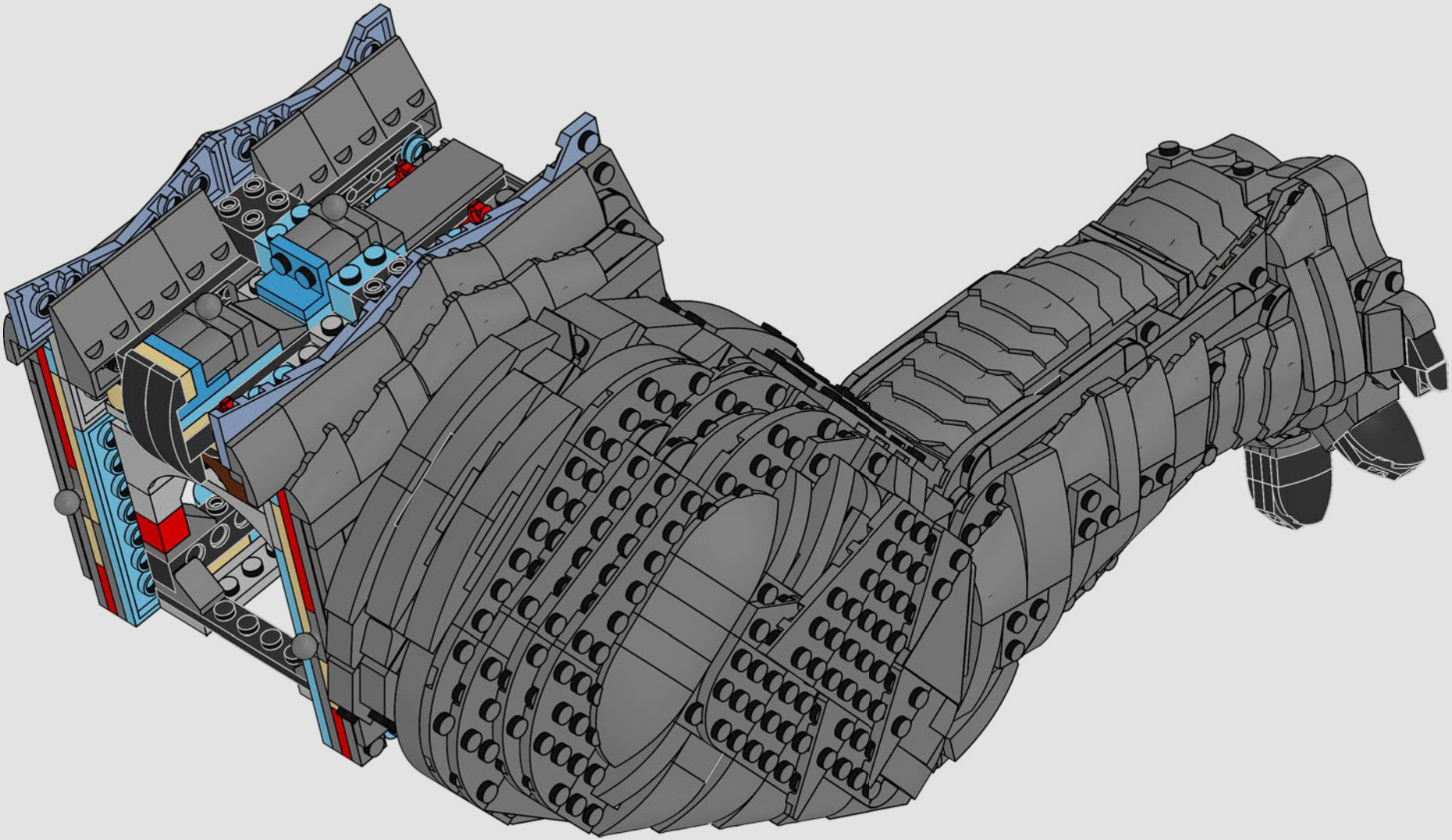


11

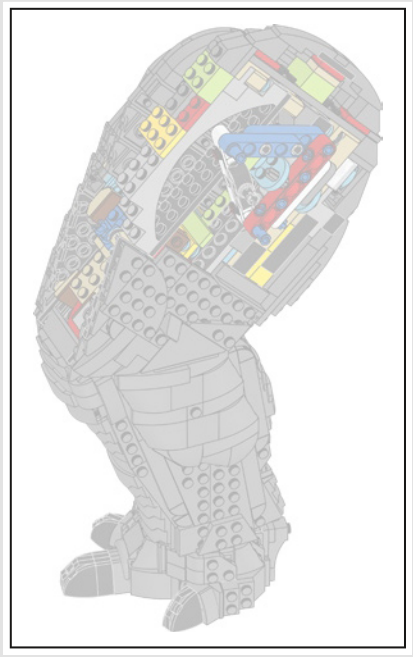

1x 1x

359

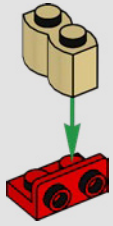

1x

360

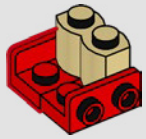

2x

361

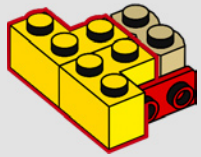

1x

362

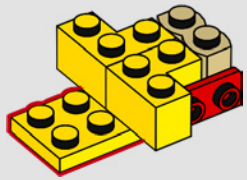

2x

363

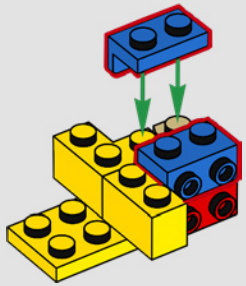




364

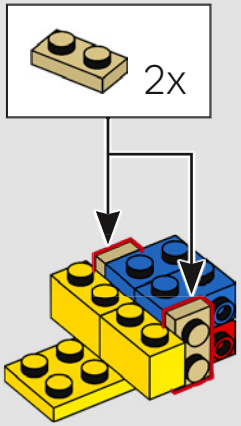


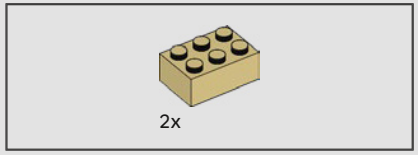


365

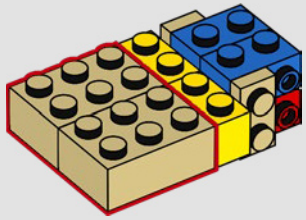

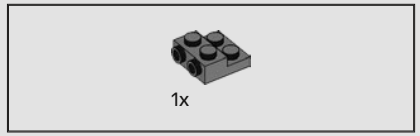


366

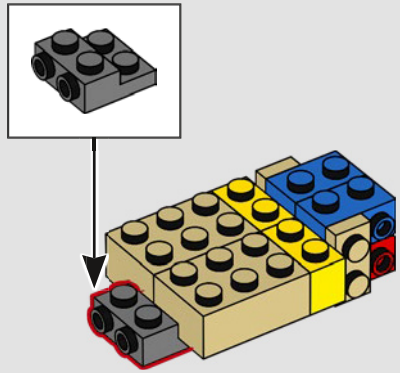

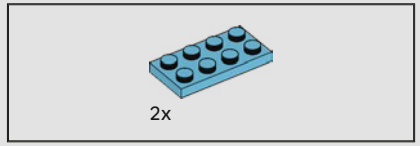


367

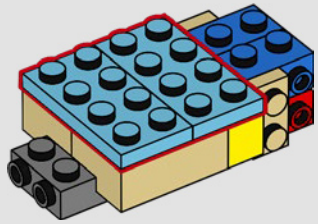




368

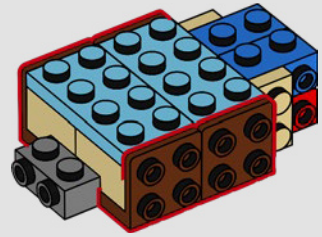

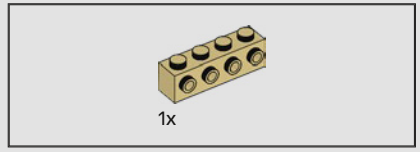


369

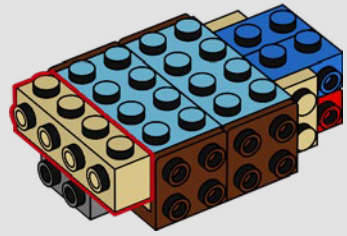

2x 2x

370

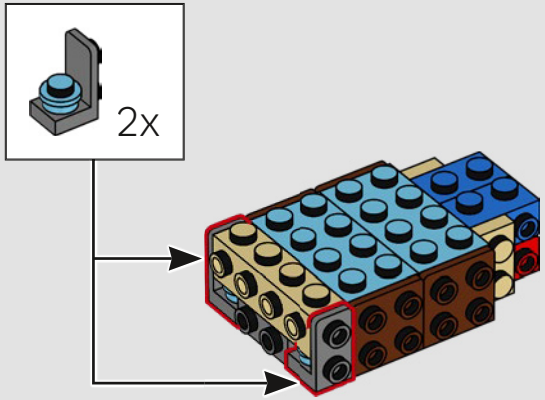


1x 1x

371

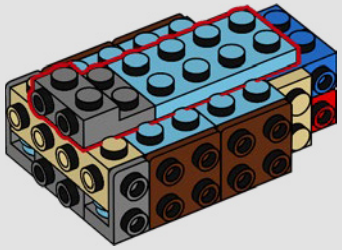

4x

372

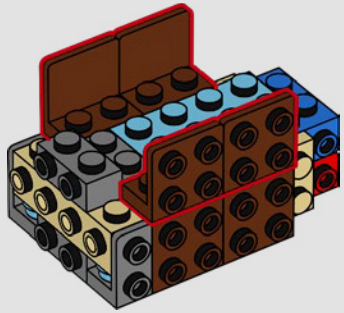

1x

373

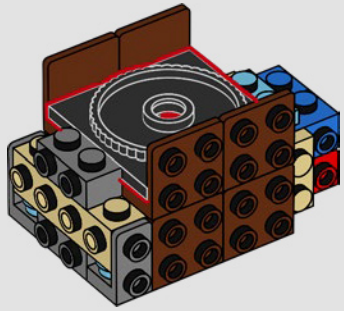

2x 2x

374

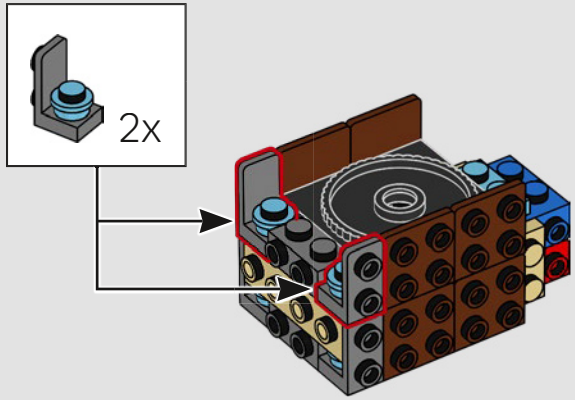


2x

375

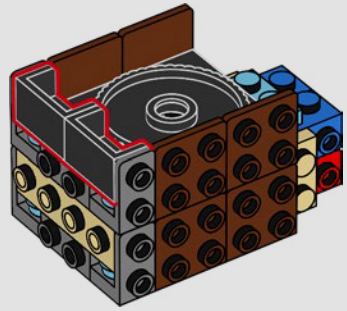

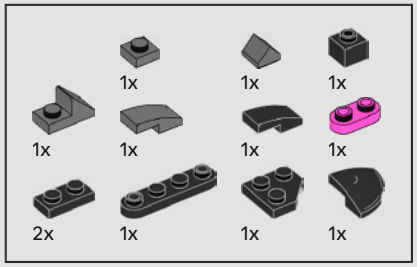


376

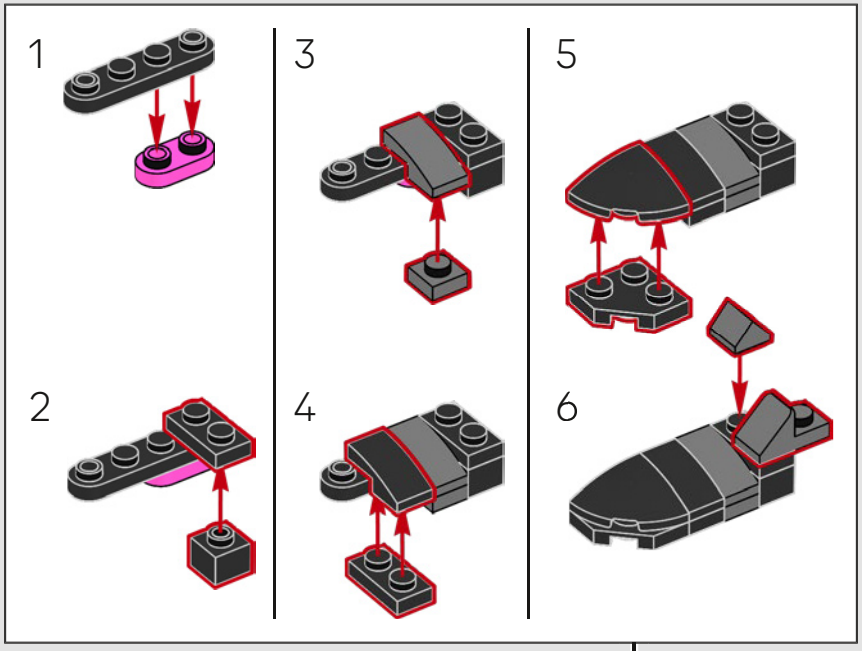


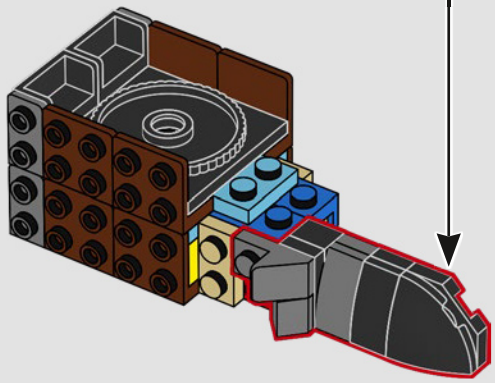




377

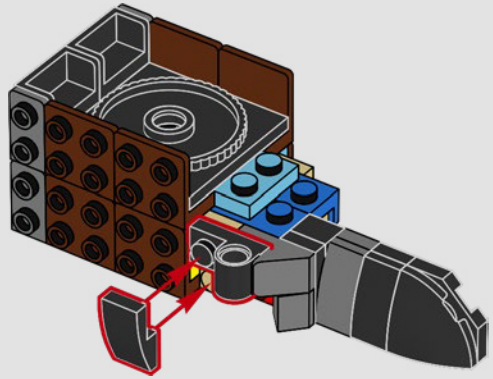

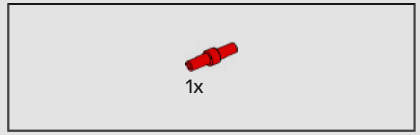


378



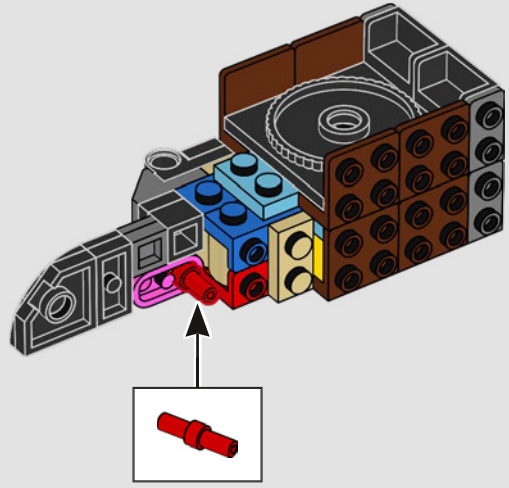

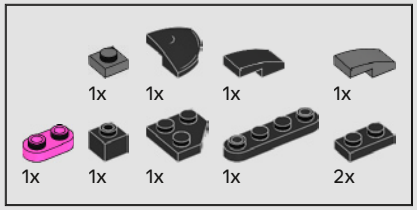


379

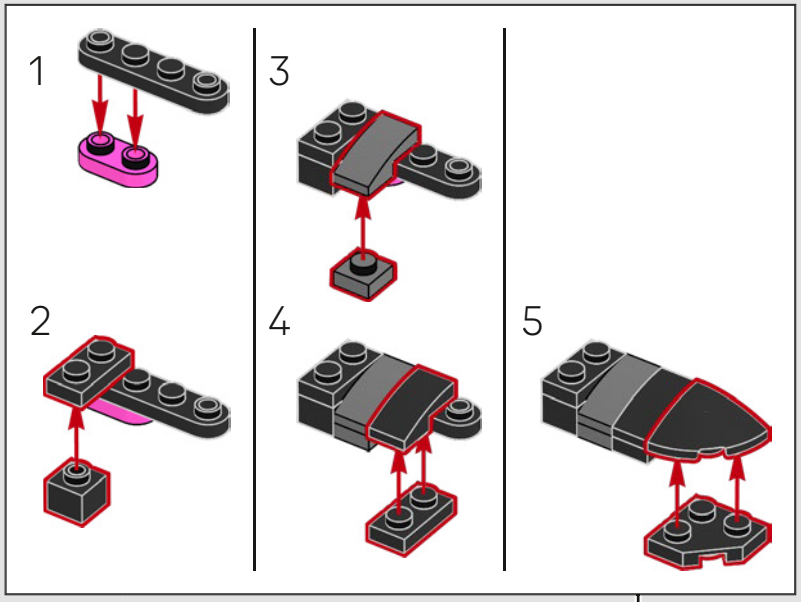


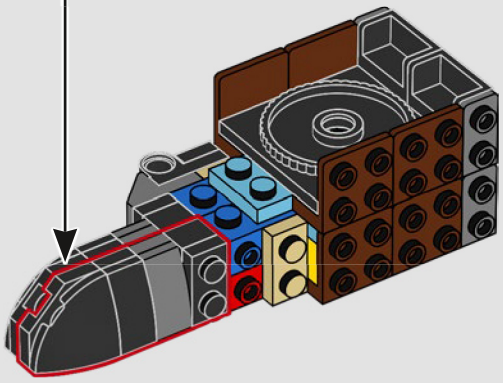

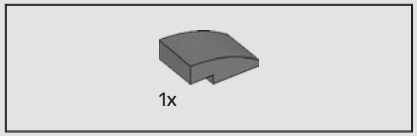


380

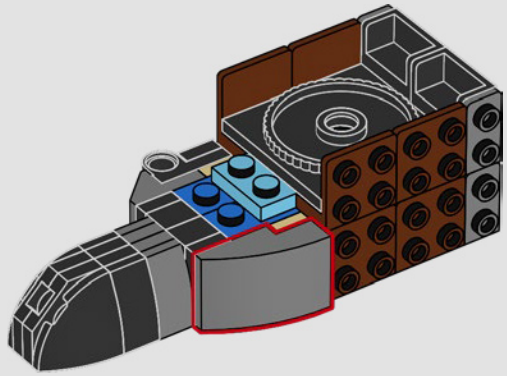

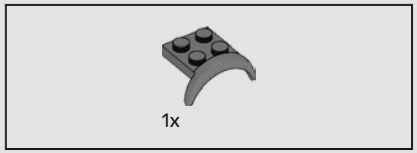


381

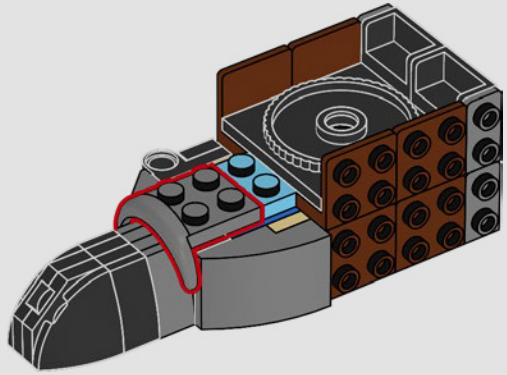




382

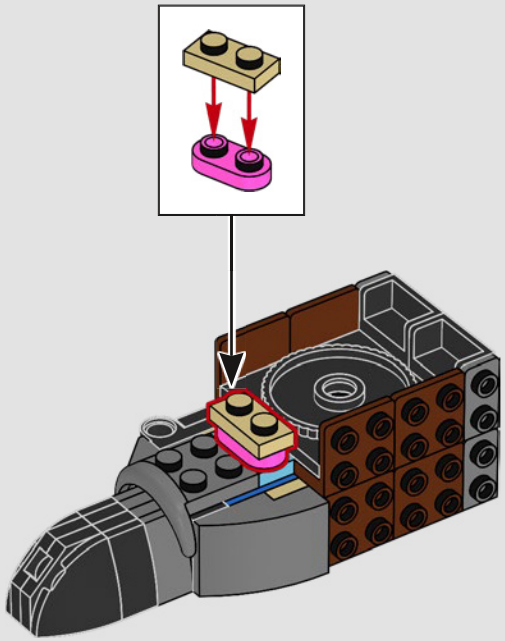

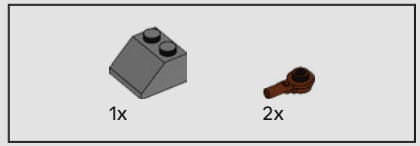


383

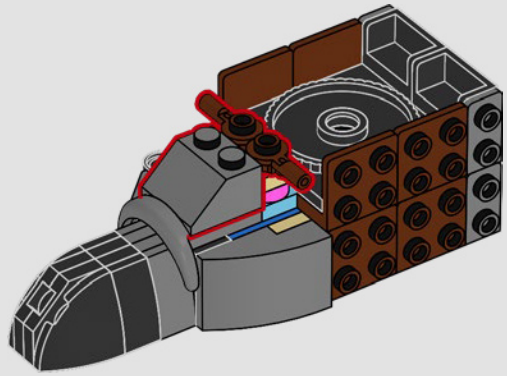

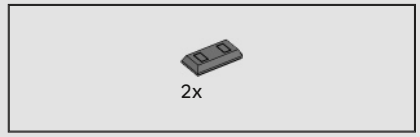


384

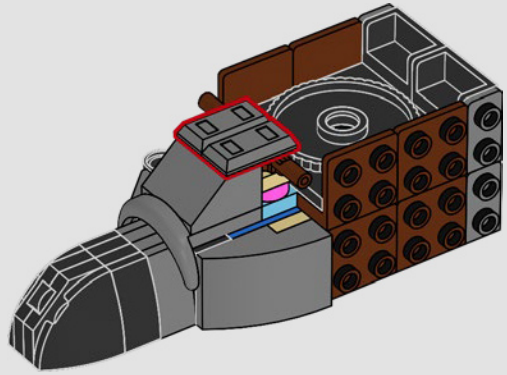

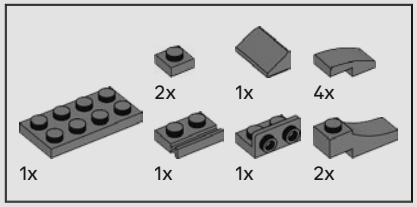


385

1

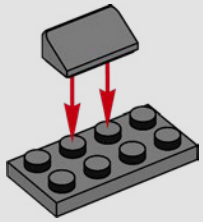

2

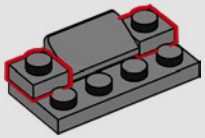

3

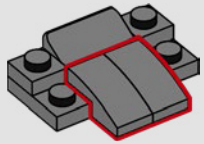

4

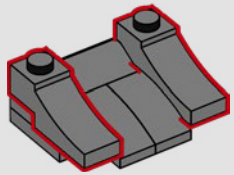

5

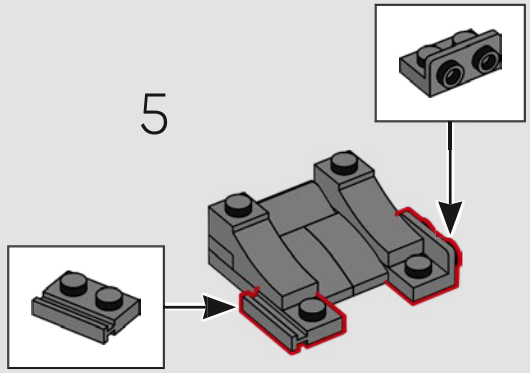

6

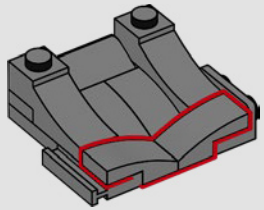

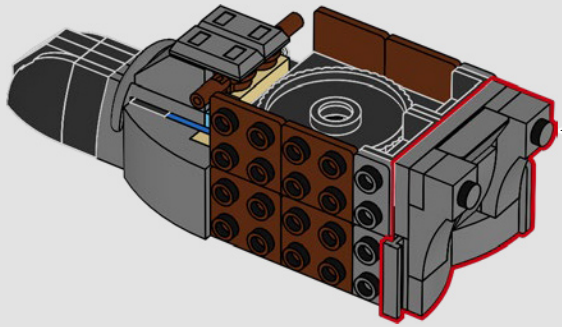

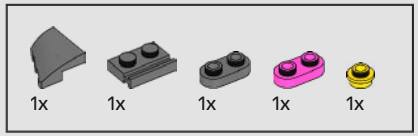


386

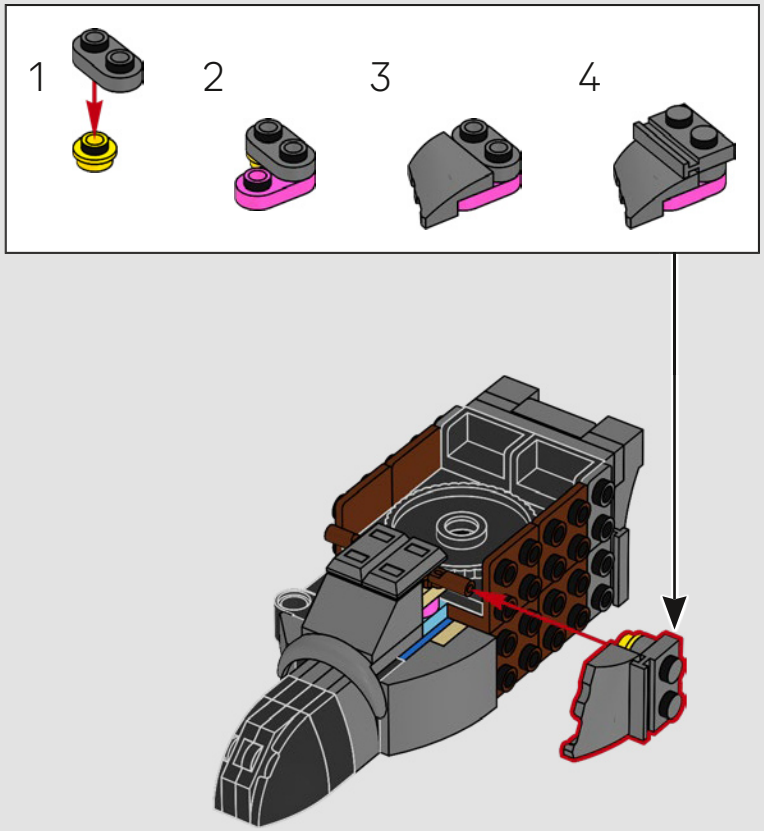

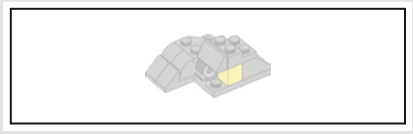

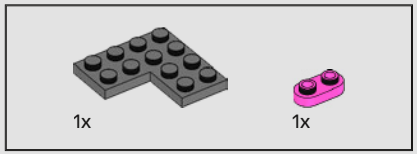


387

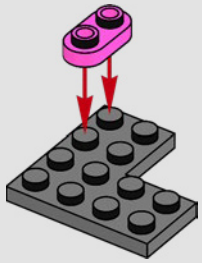

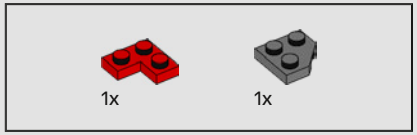


388

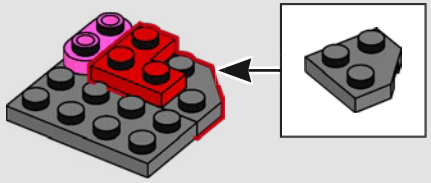

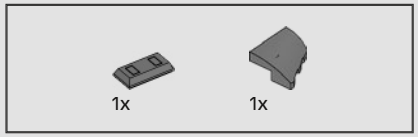


389

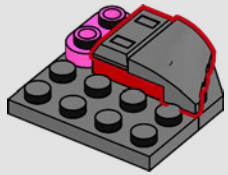

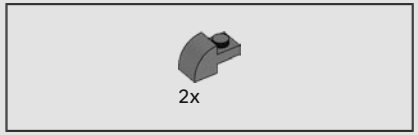


390

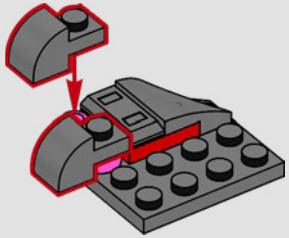

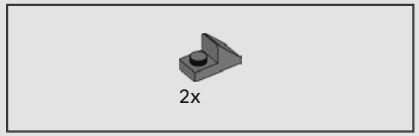


391

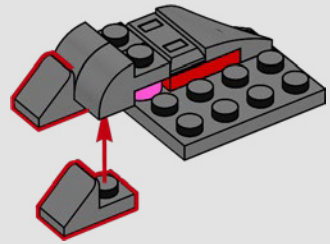

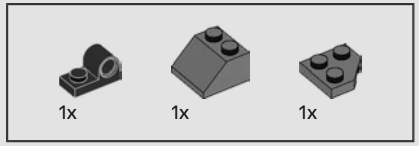


392

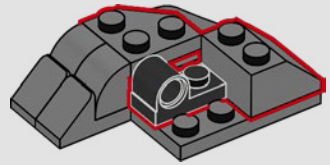

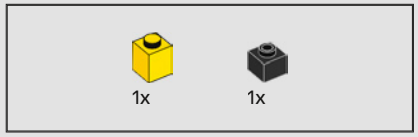


393

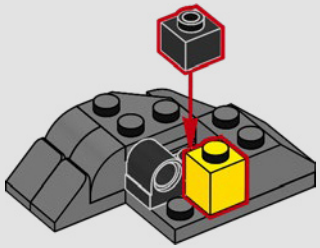

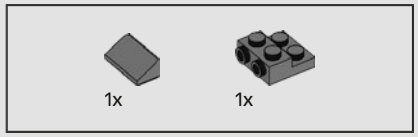


394

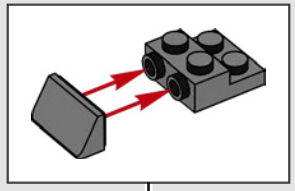

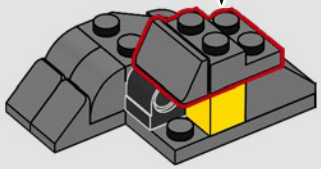

395

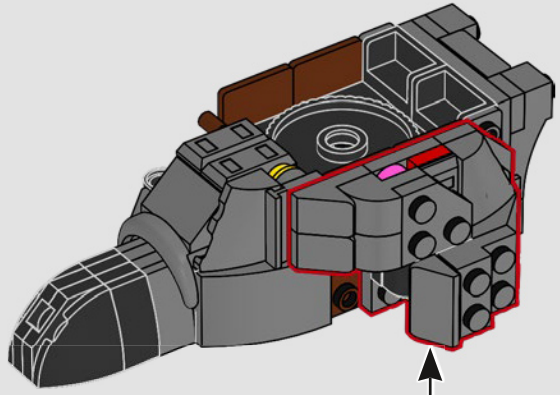

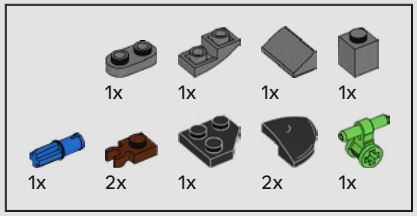


396

1

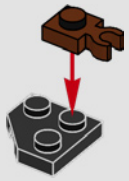

2



3

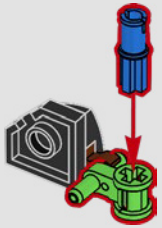

4

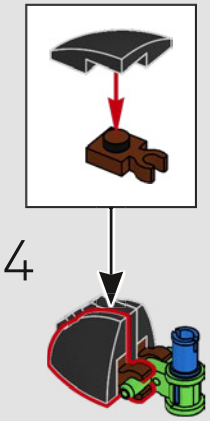

5

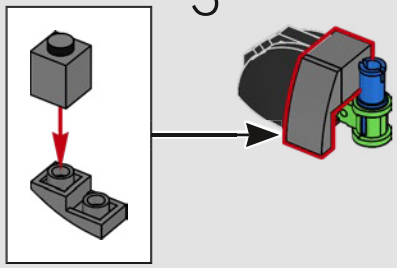

6

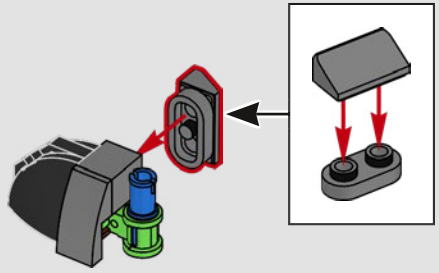

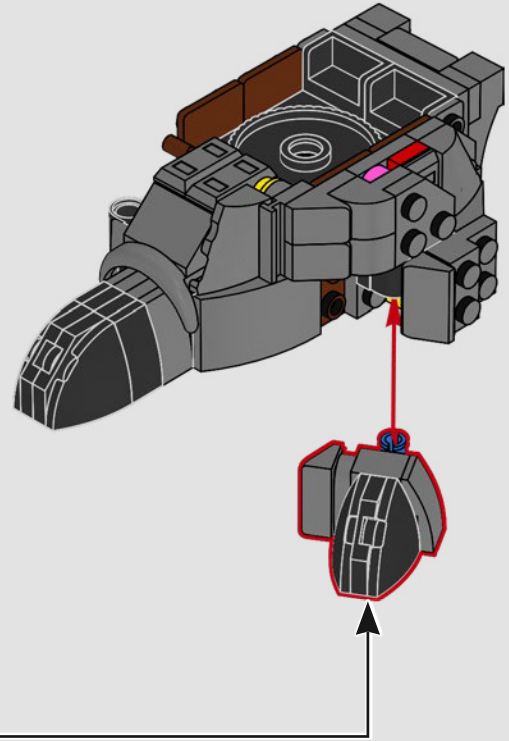

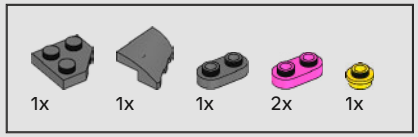


# 397

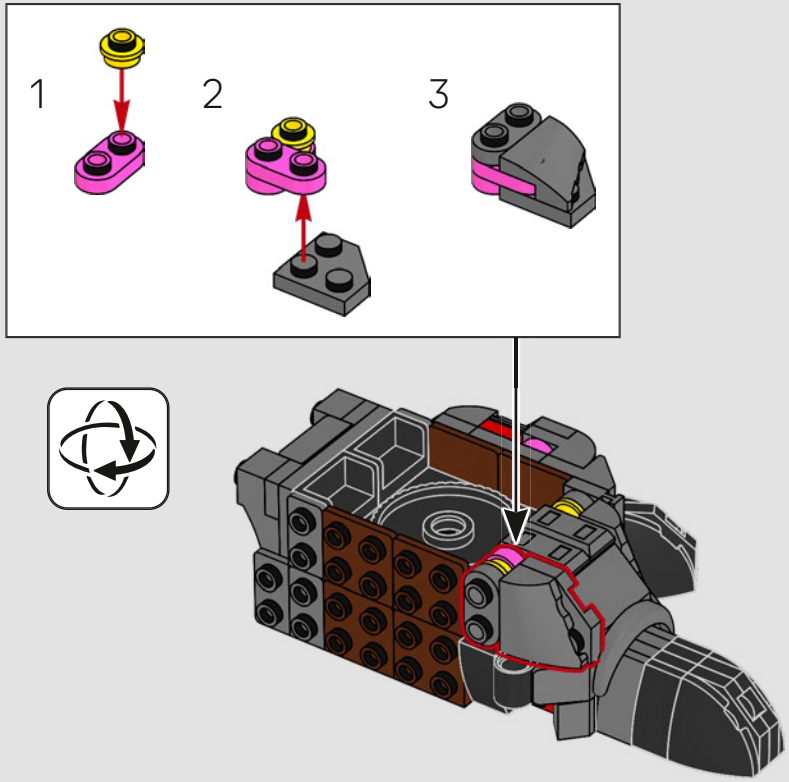

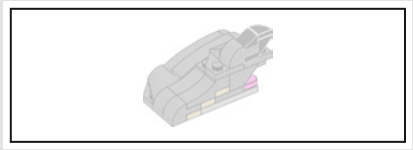

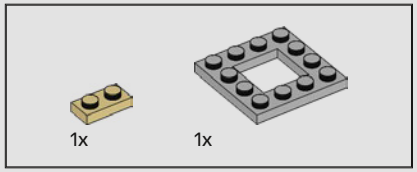


398

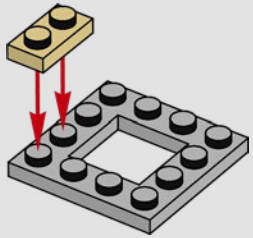

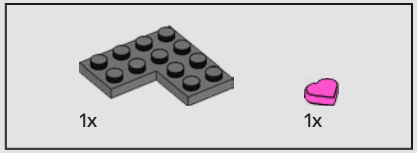


399

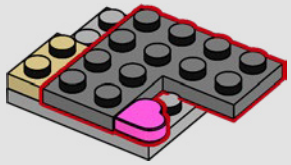




400

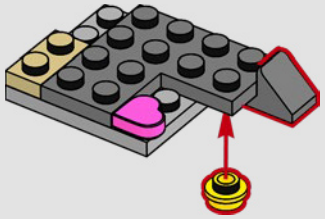

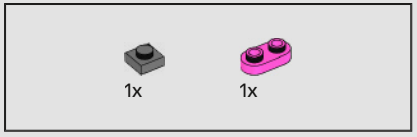


401

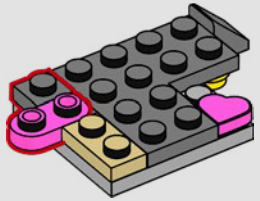

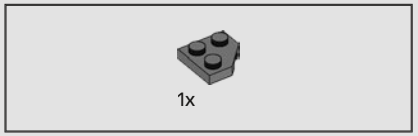


402

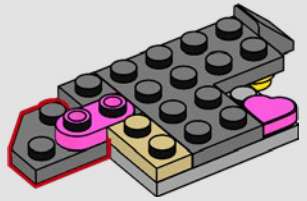

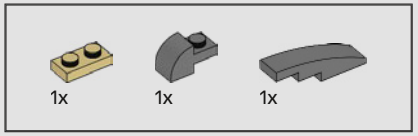


403

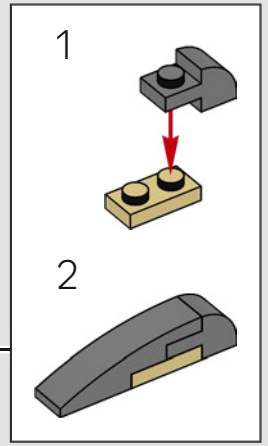


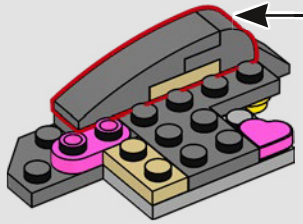

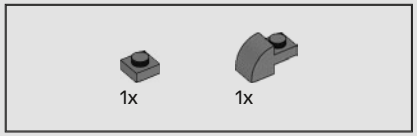


404

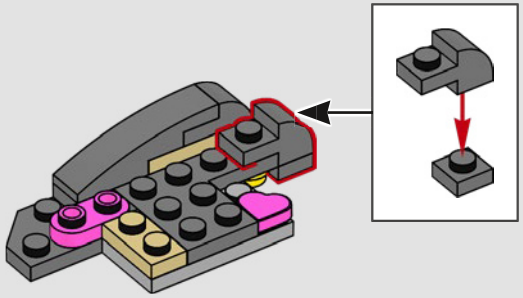

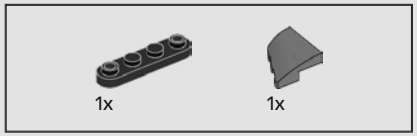


405

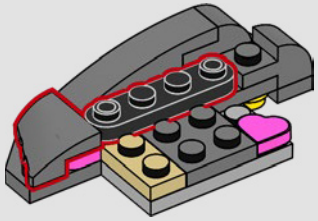

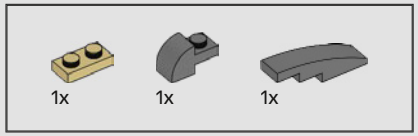


406

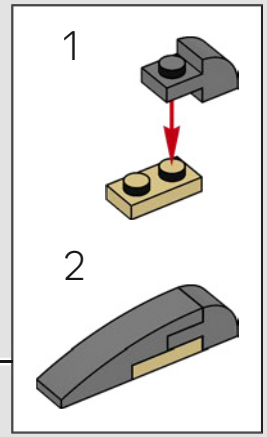


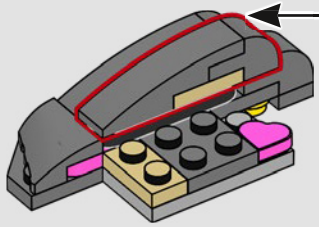

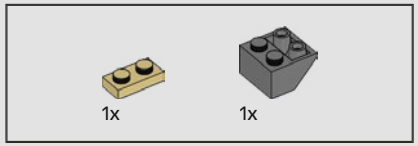


407

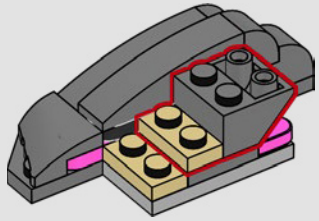

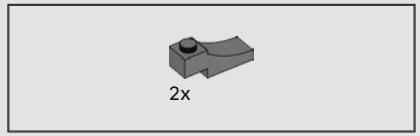


408

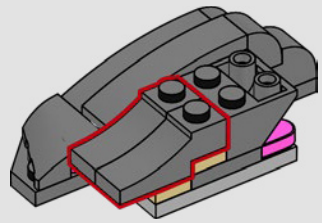

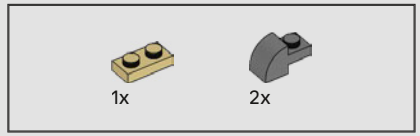


409

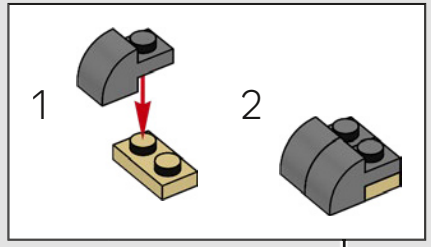


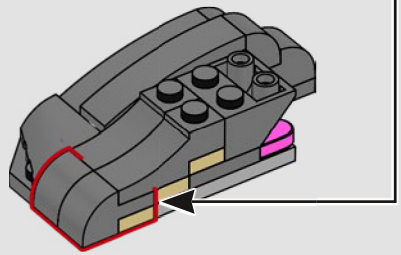

2x

410

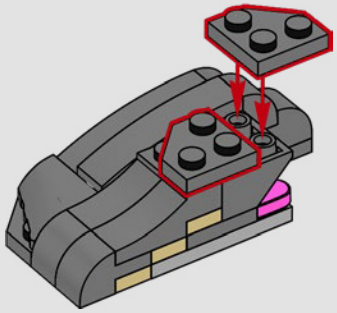

1x

411

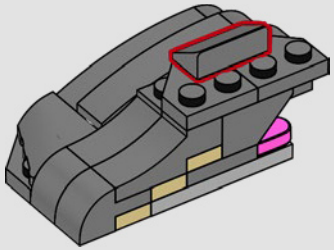

1x 1x 1x 1x

412

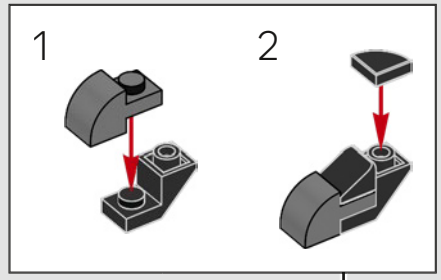


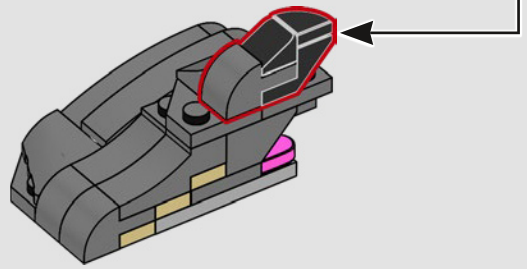

413

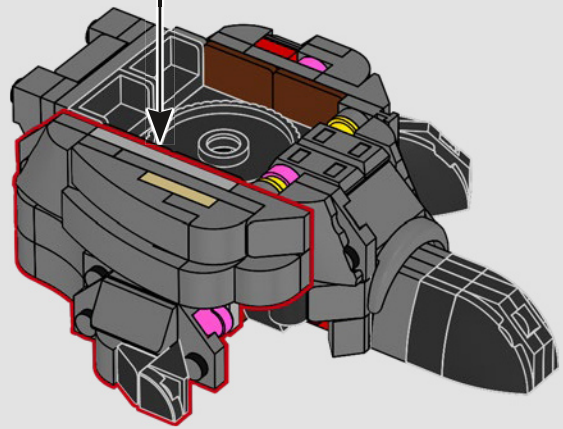

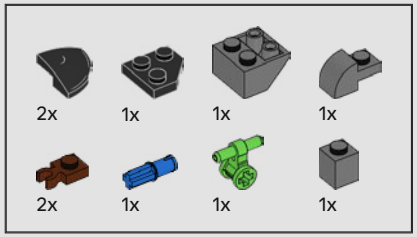


414

1

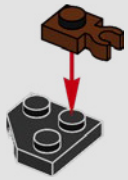

2



3

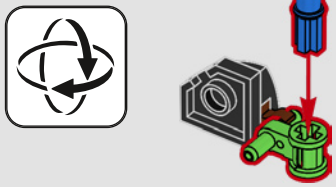

4

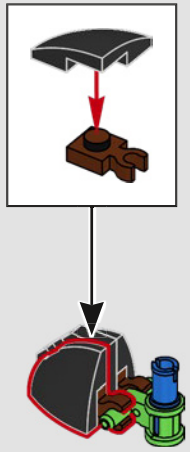

5

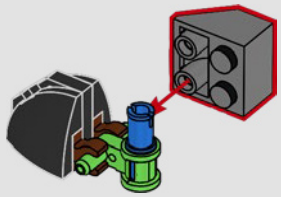

6

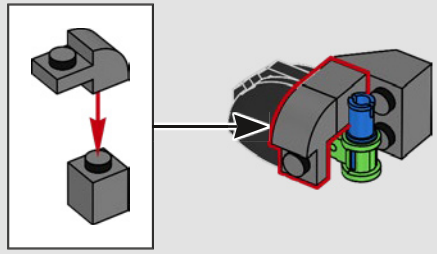

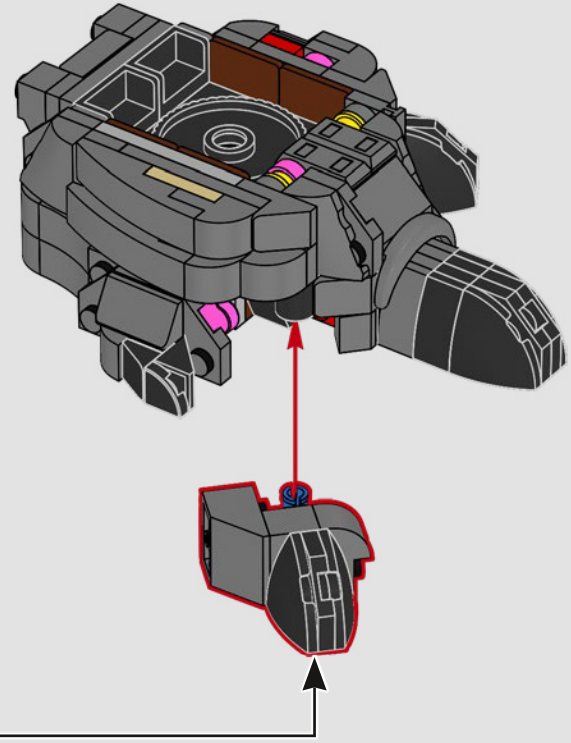




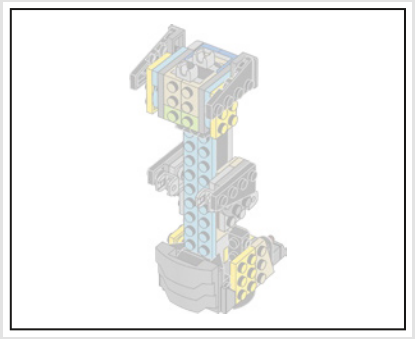

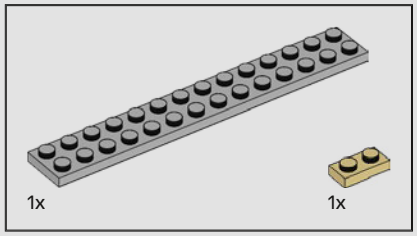


415

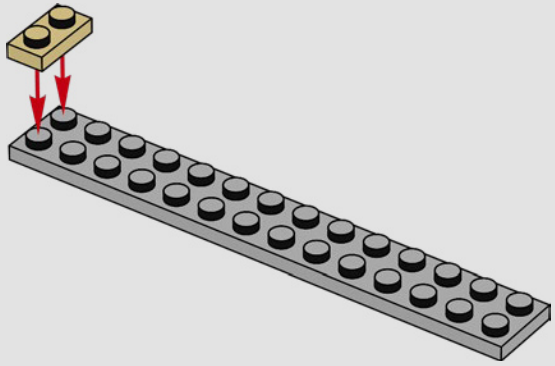




416

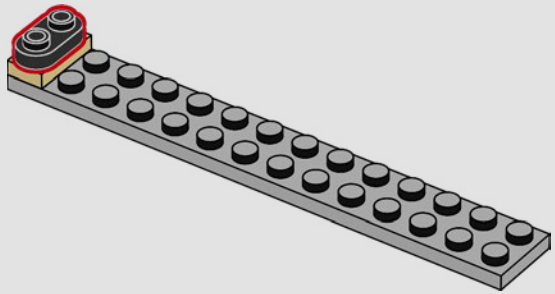

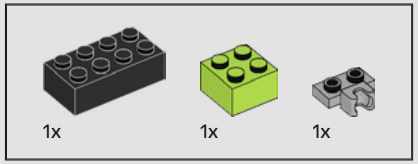


417

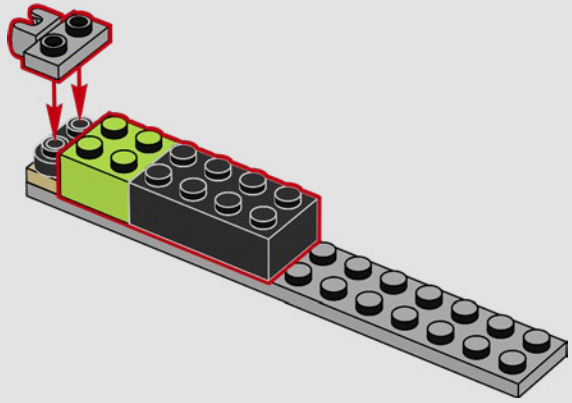

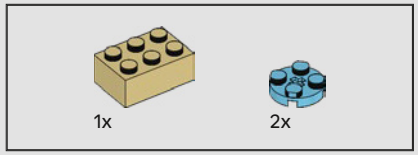


418

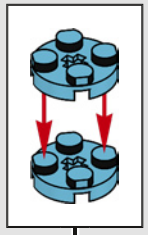

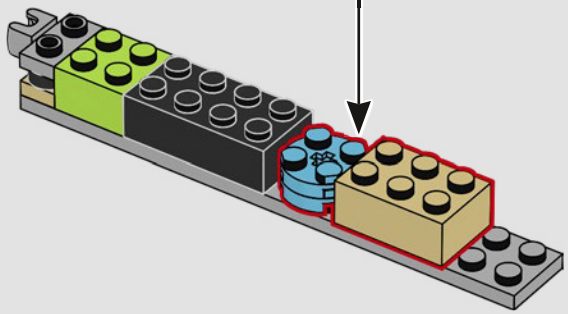

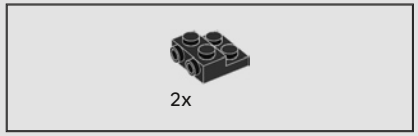


419

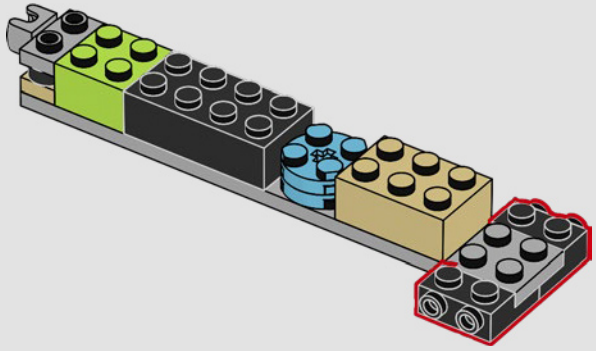




420



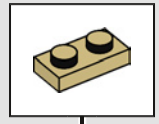

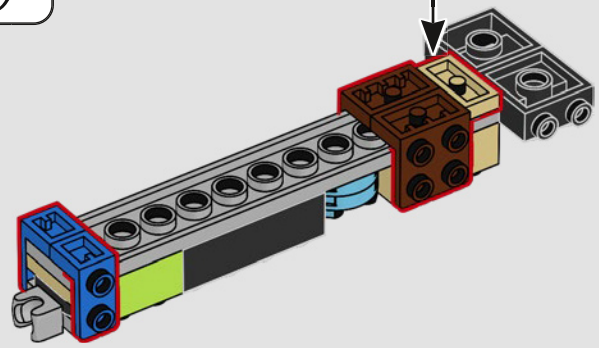

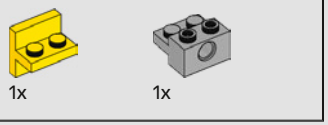


421



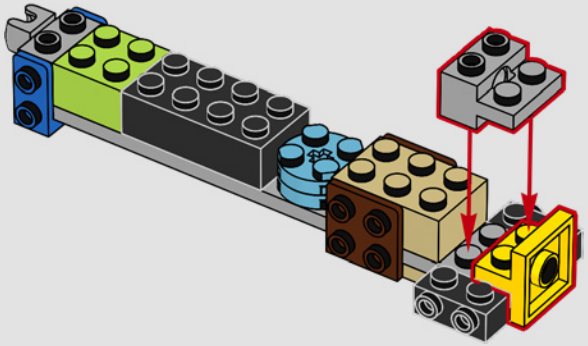

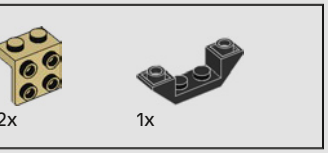


422

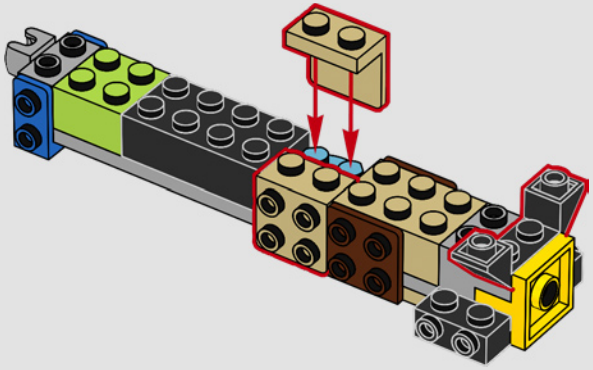

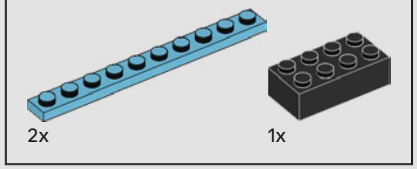


423

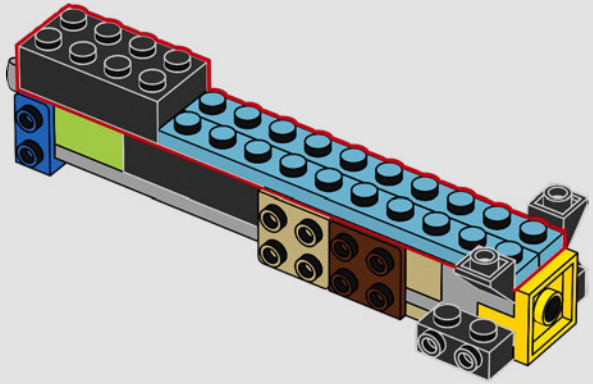




424

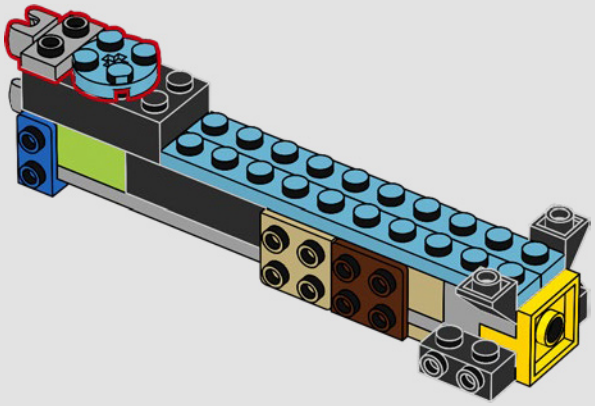




425

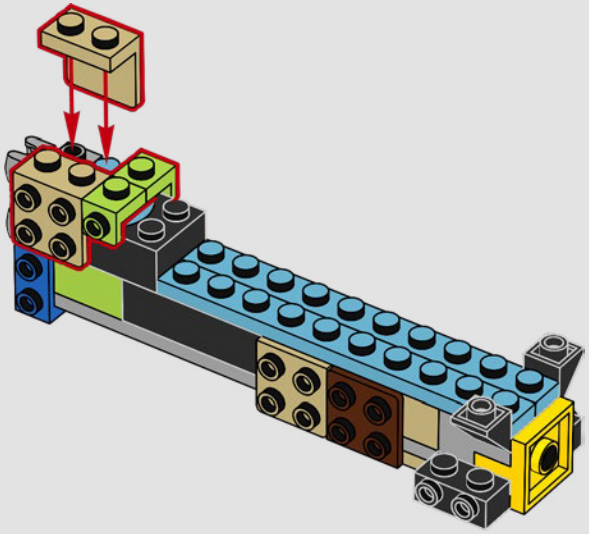

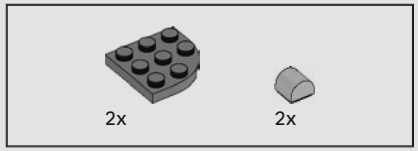


426

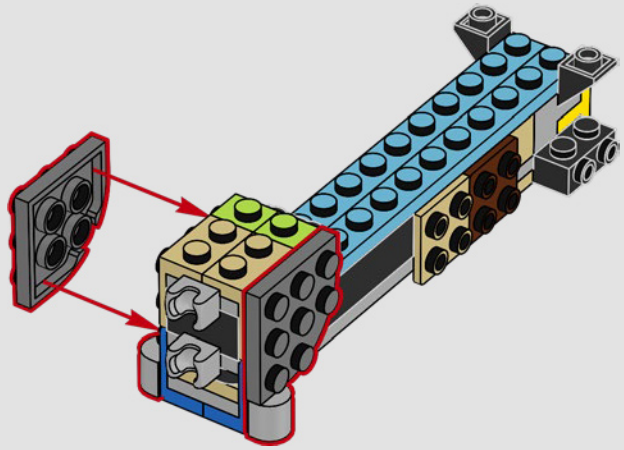




427

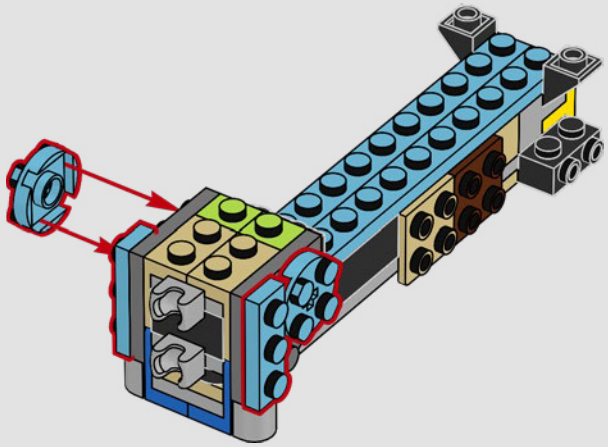




428

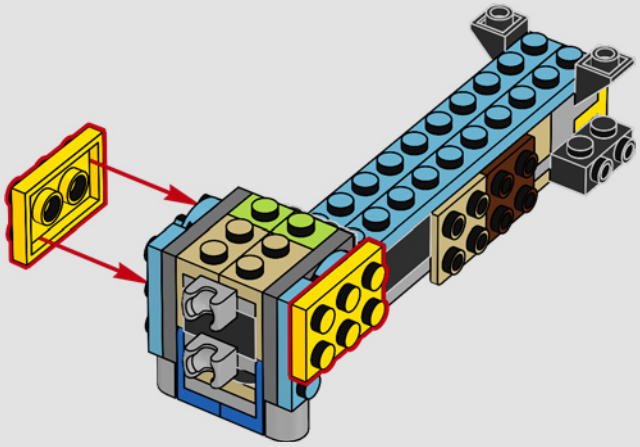




429

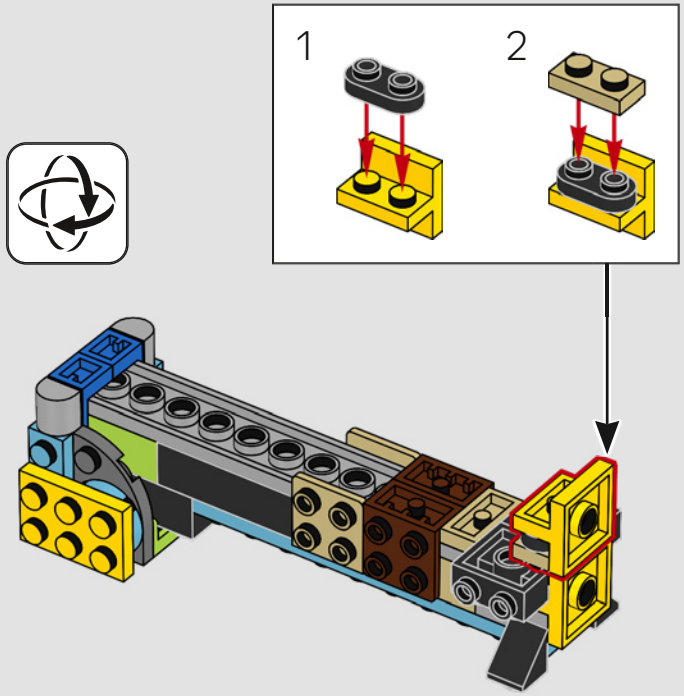

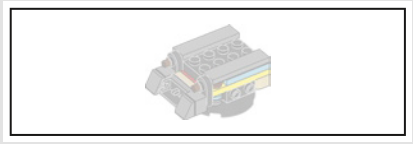

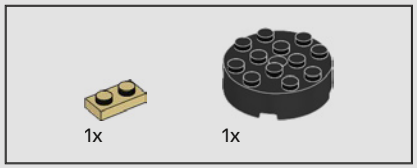


430

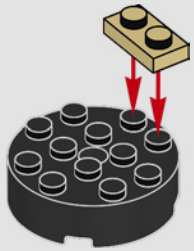

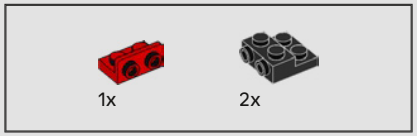


431

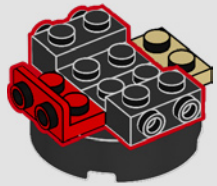

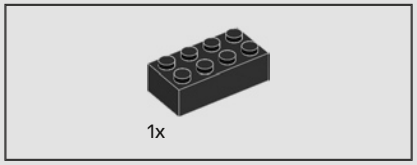


432

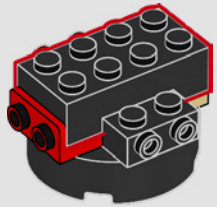

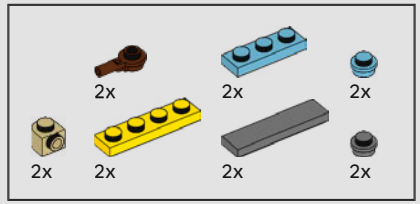


433

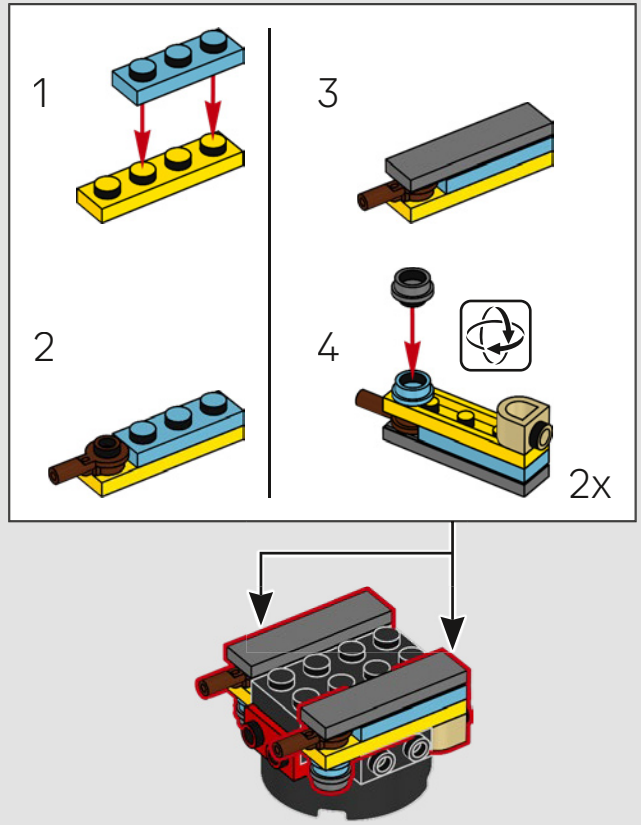

1x 1x

## 434

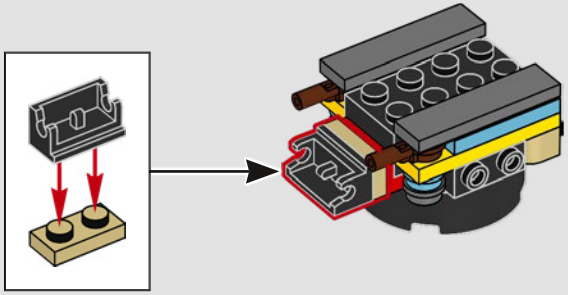

2x 2x 2x

## 435

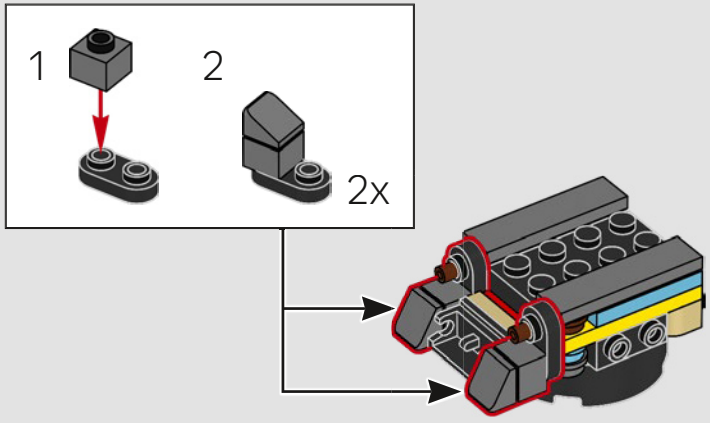


## 436

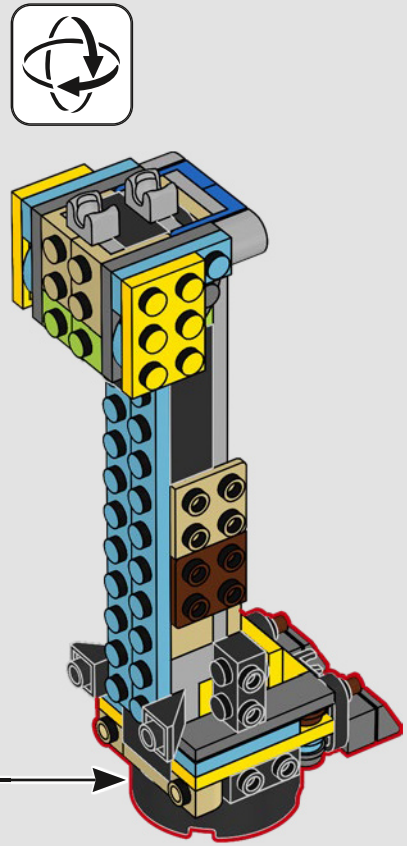

2x

## 437

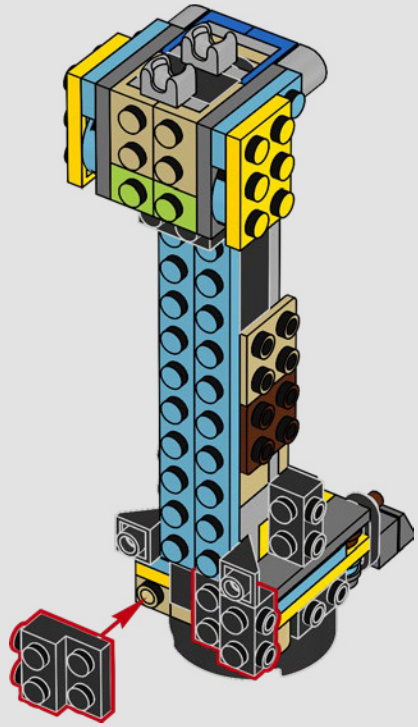

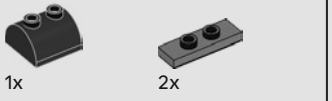


438

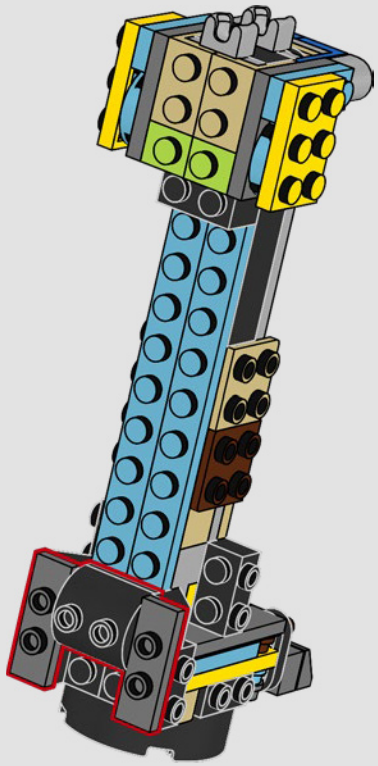

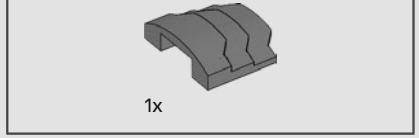


439

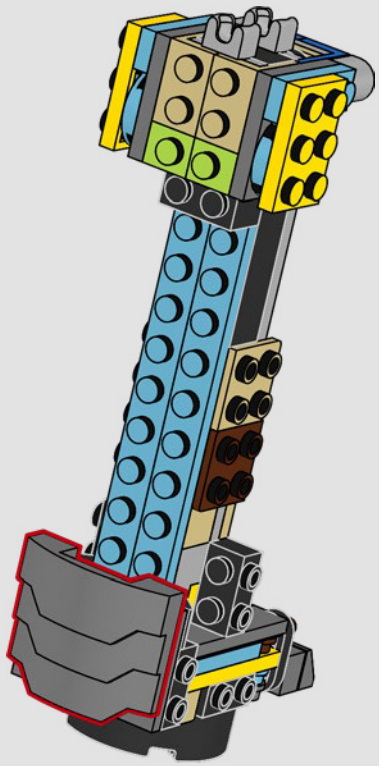

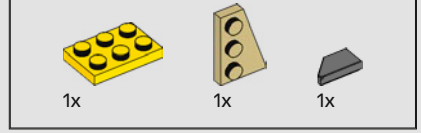


440

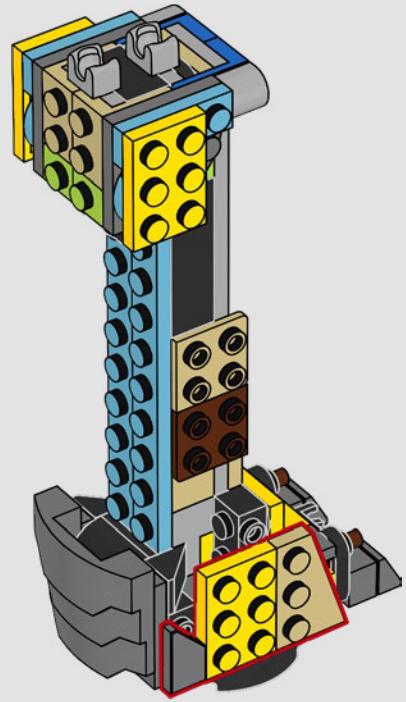

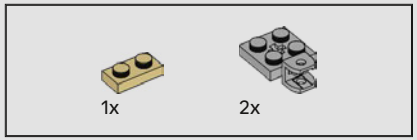


441

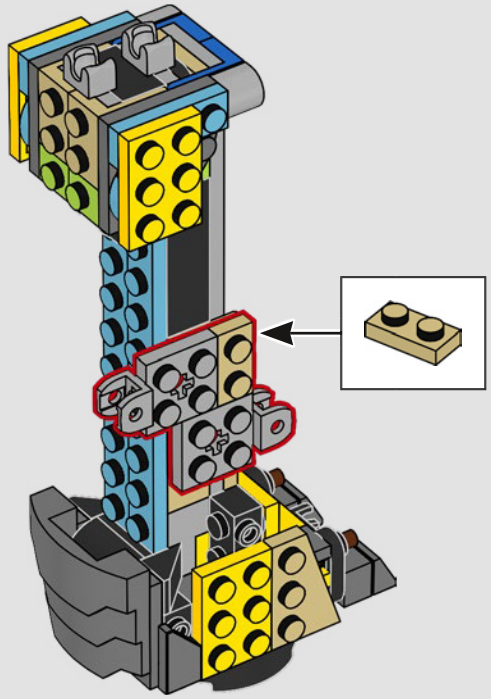

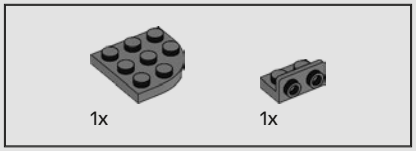


442

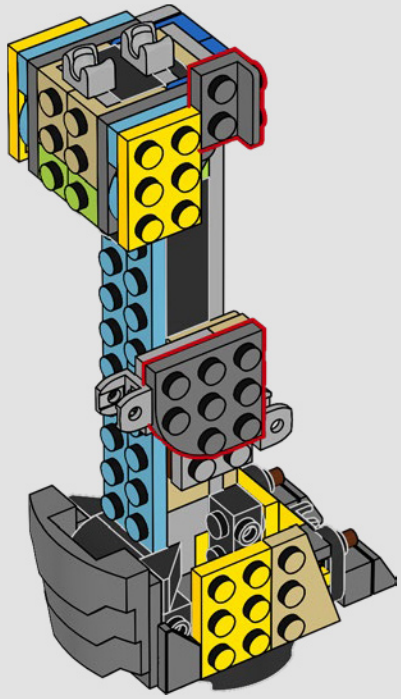

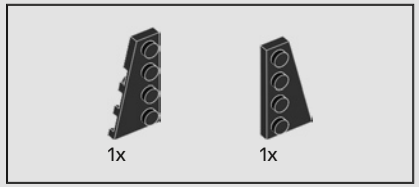


443

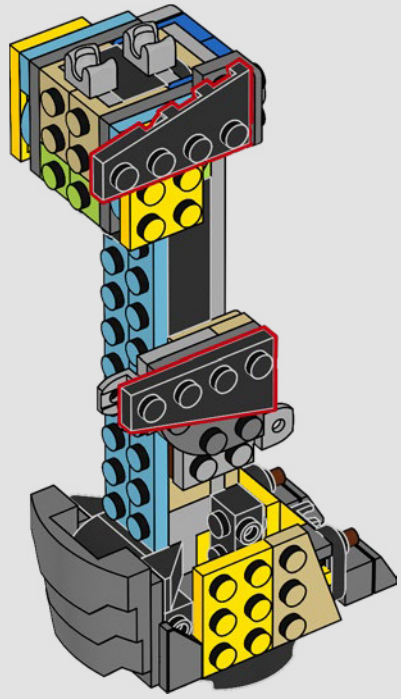

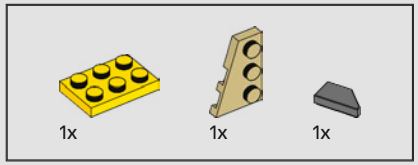


444

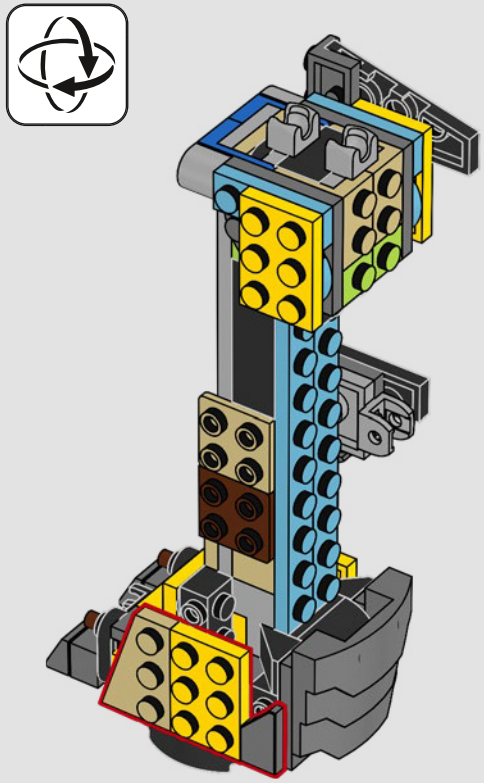

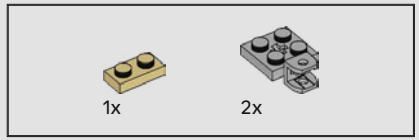


445

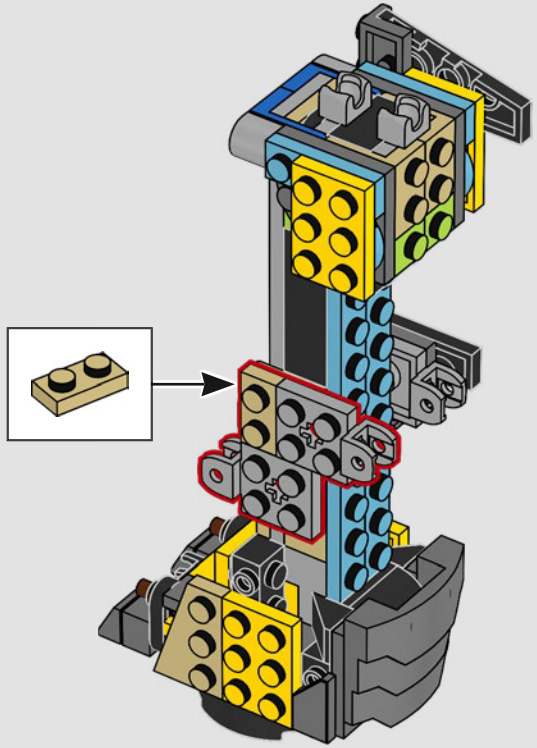

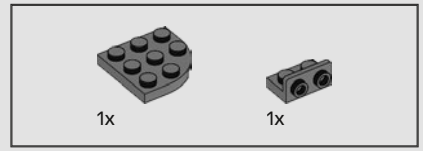


446

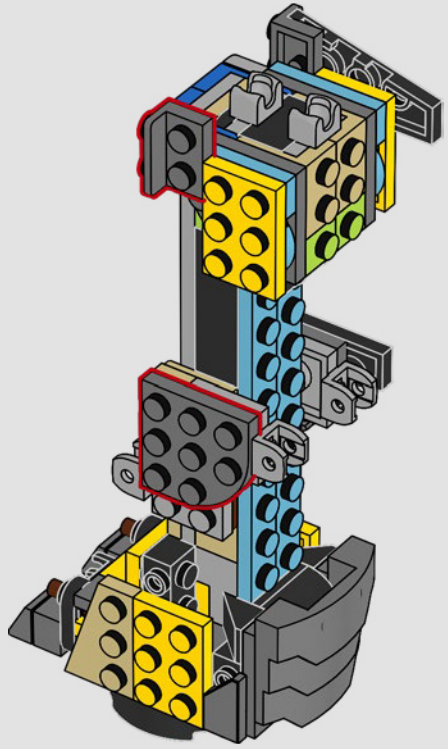

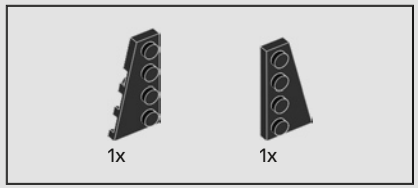


447

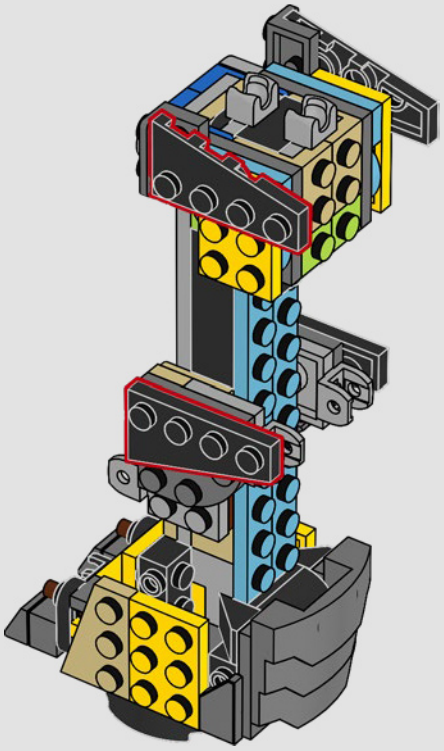

448

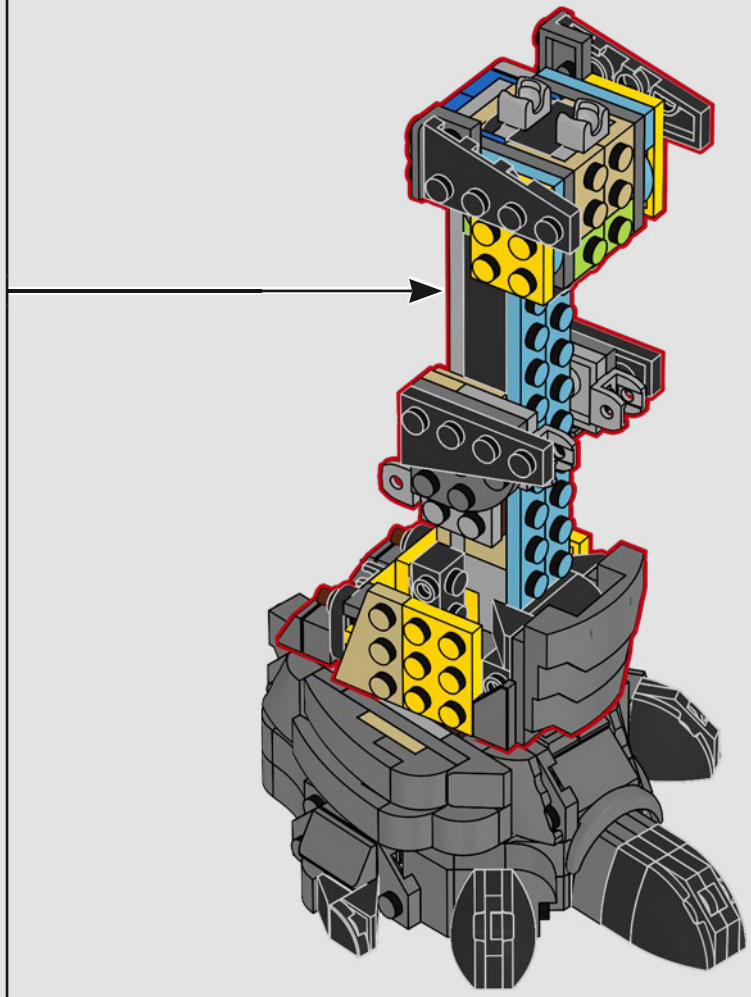

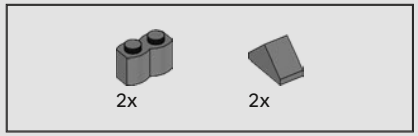


449

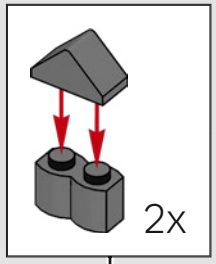


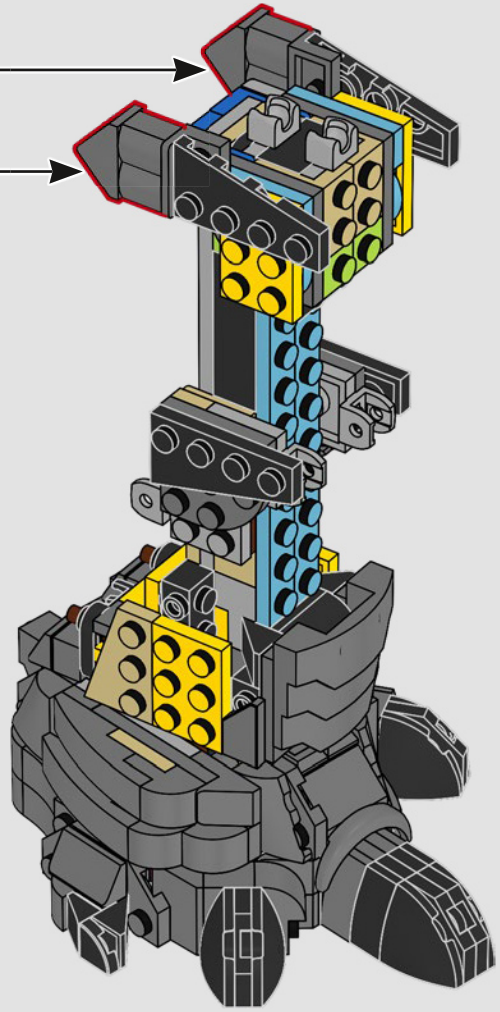




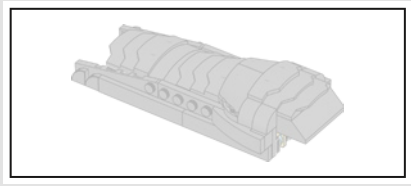

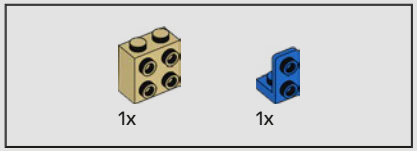


450

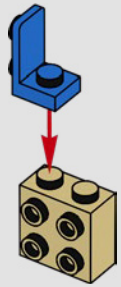

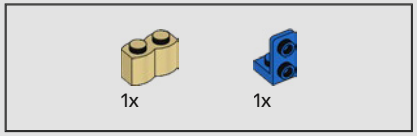


451

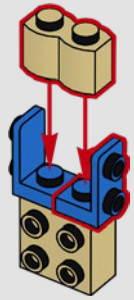

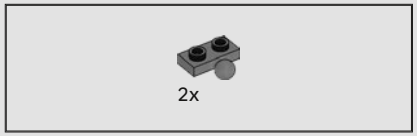


452

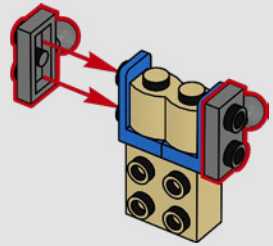

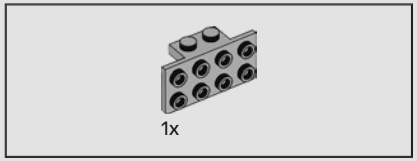


453

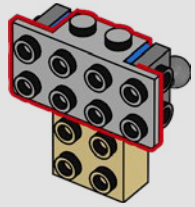

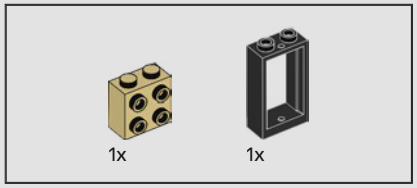


454

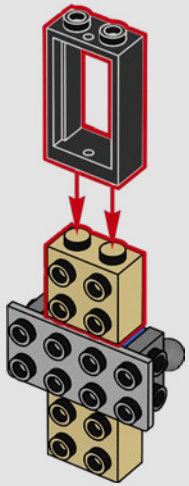

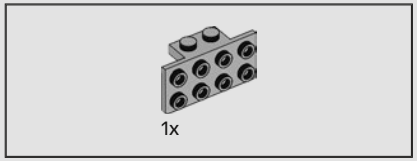


455

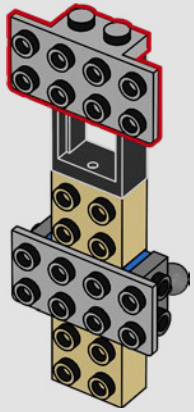

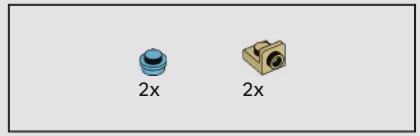


456

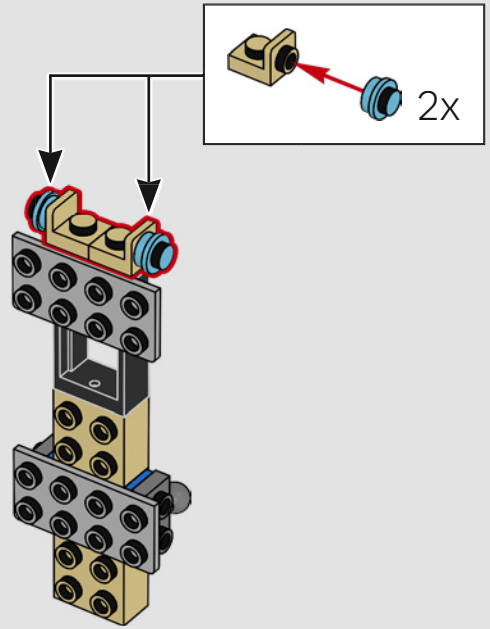





457

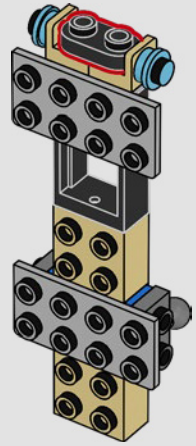




458

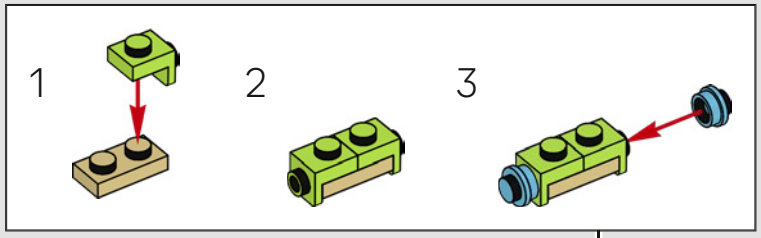




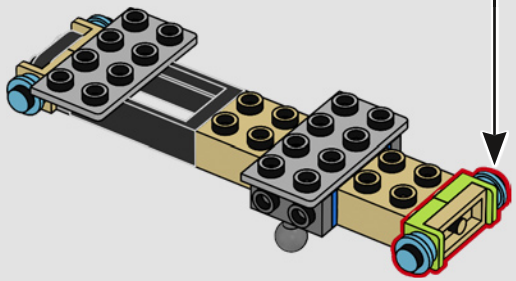

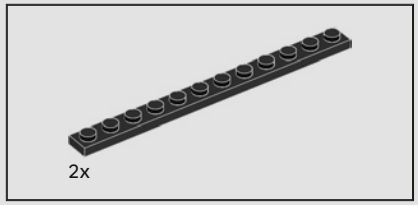


459

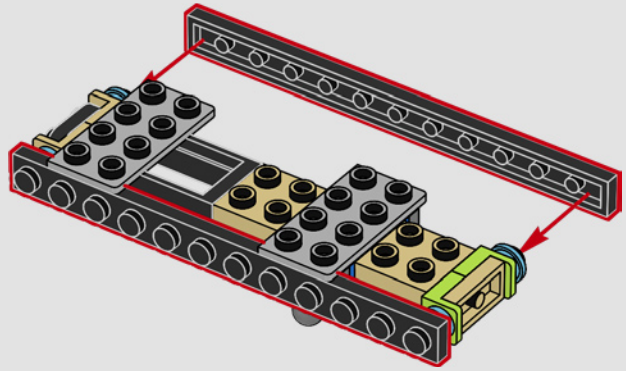

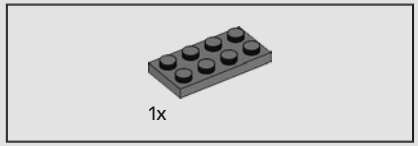


460

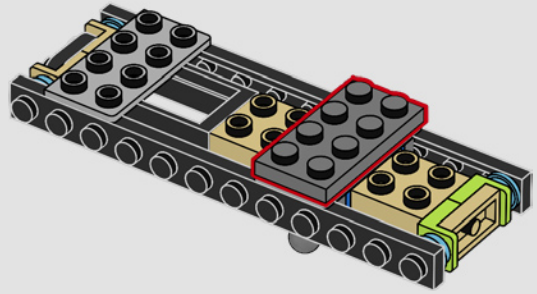

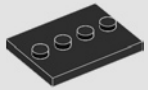


461

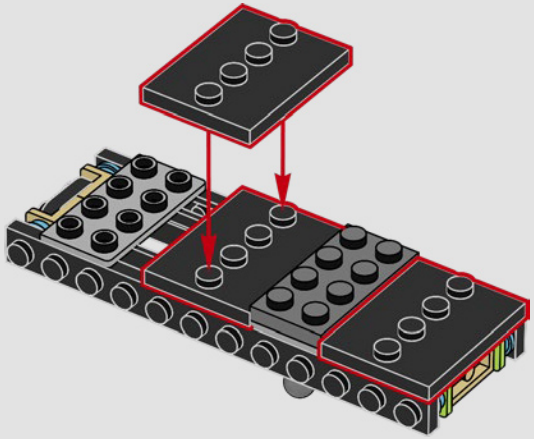




462

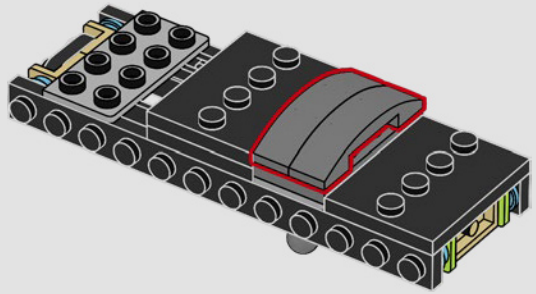

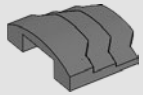


463

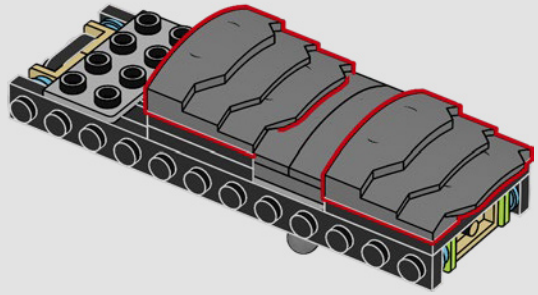

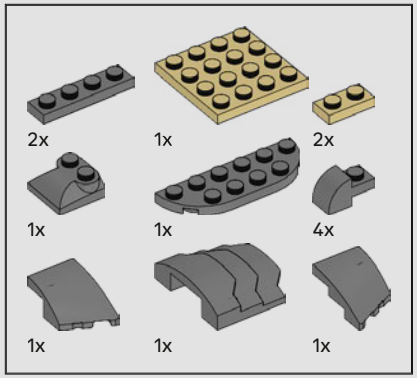


464

1

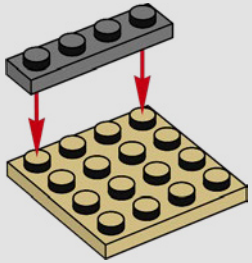

2

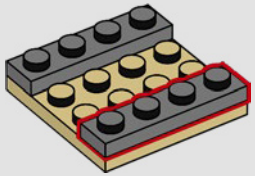

3

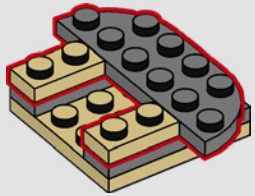

4

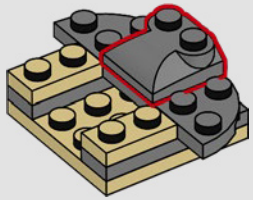

5

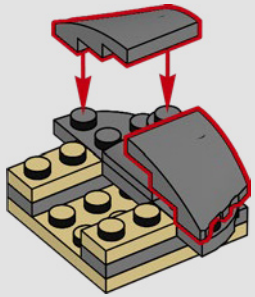

6

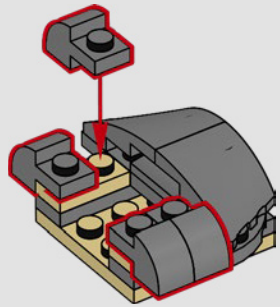

7

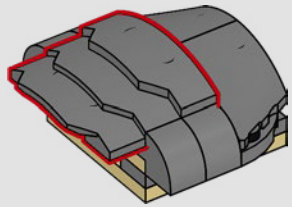

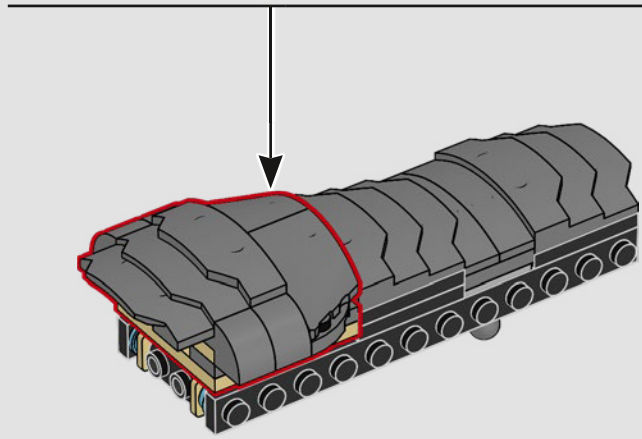

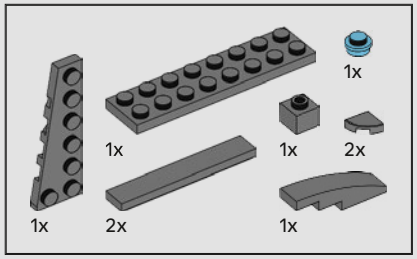


465

1

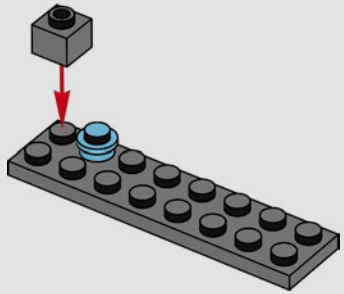

2

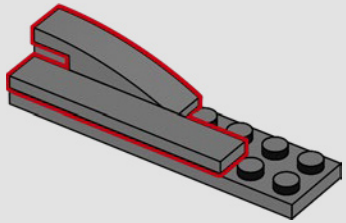

3

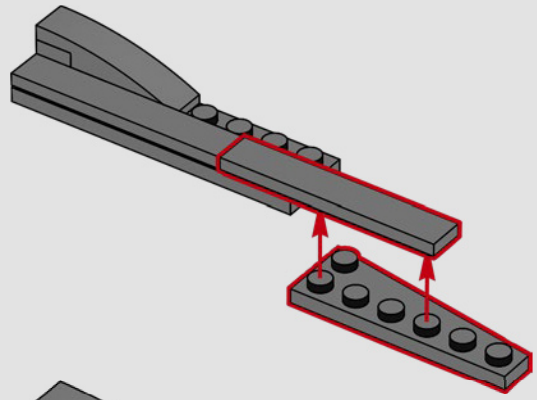

4

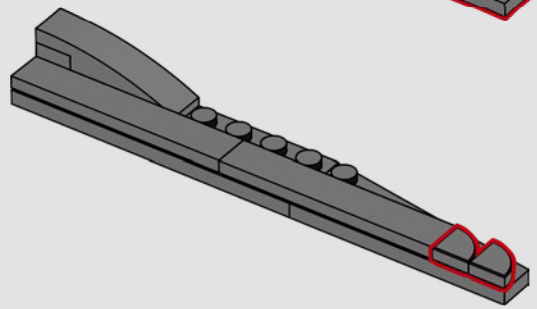

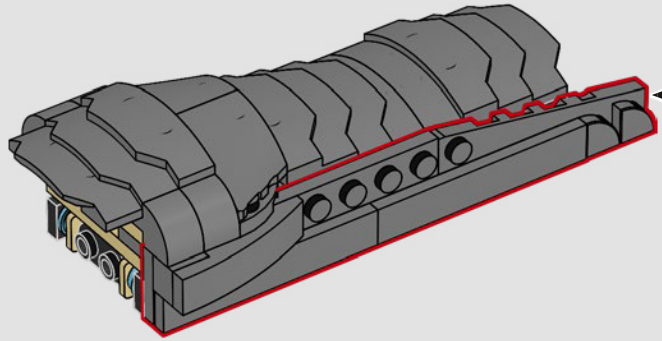

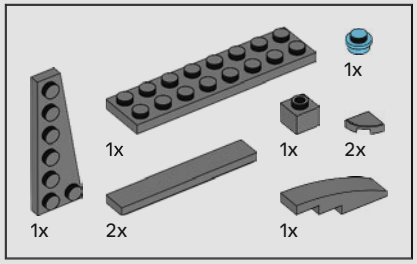


466

1

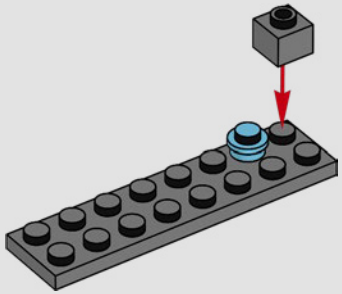

2

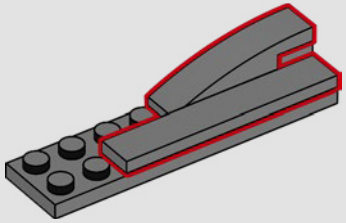

3

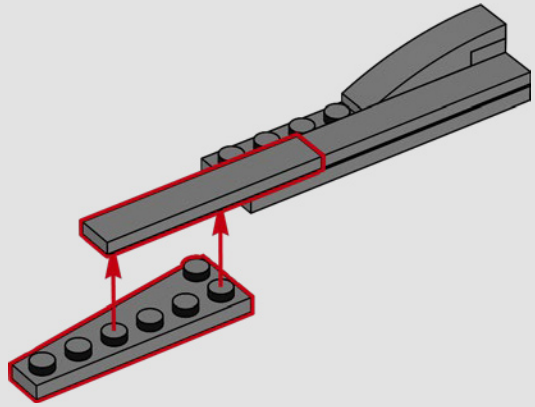

4

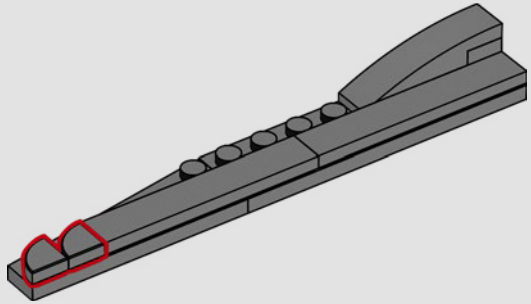



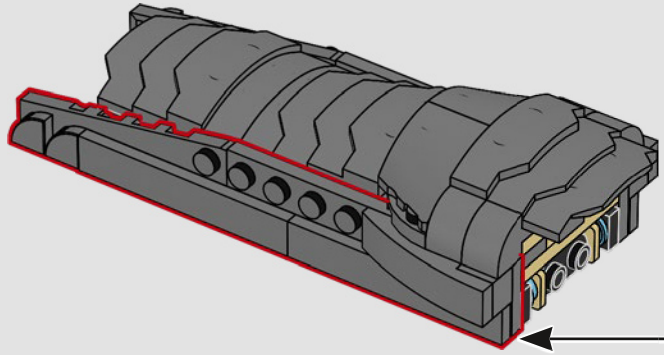

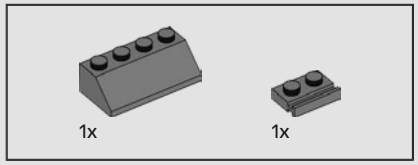


467

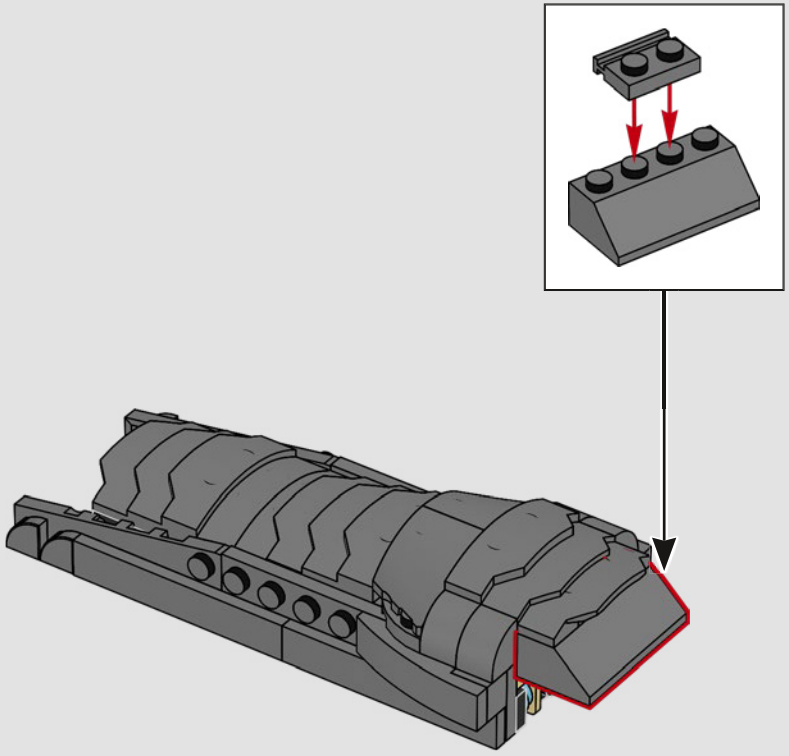

468

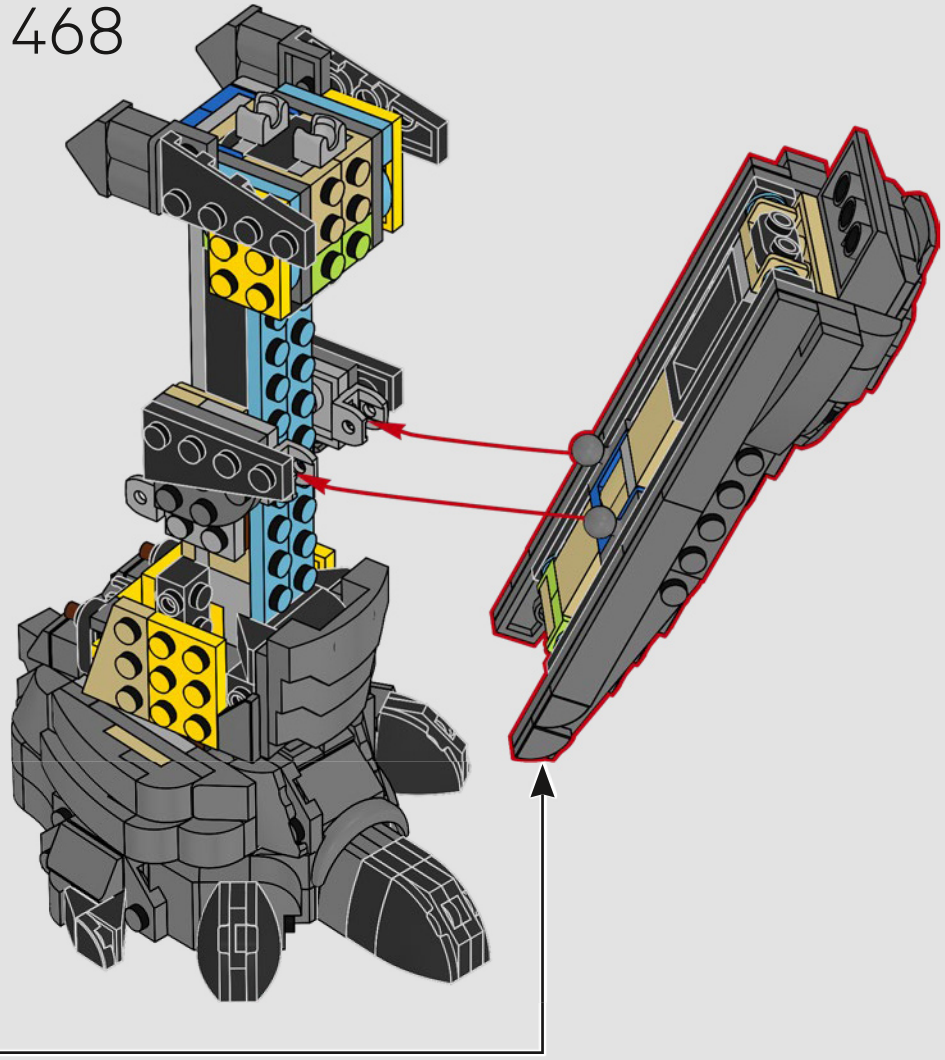

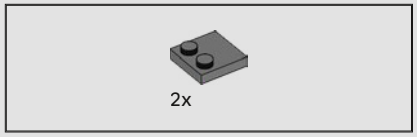


469

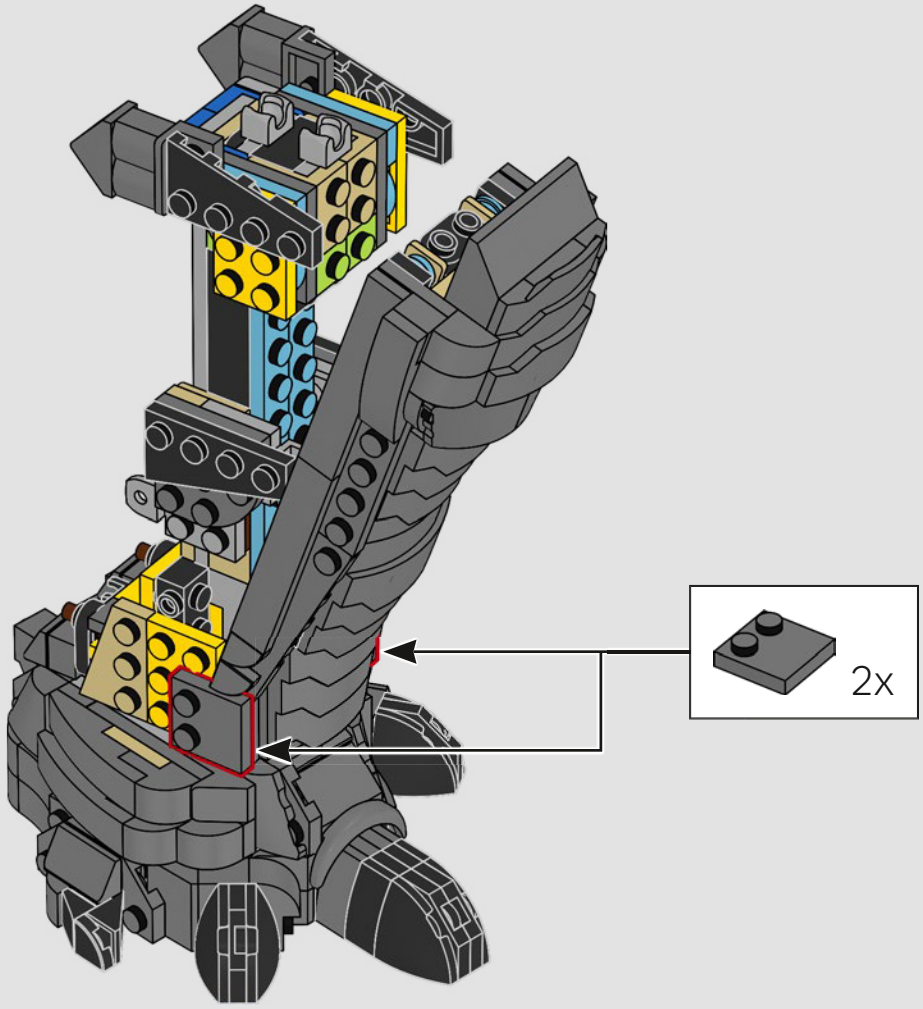

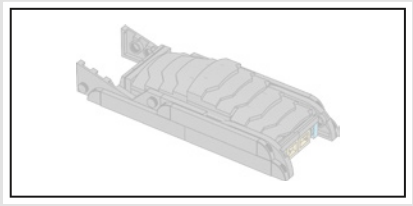

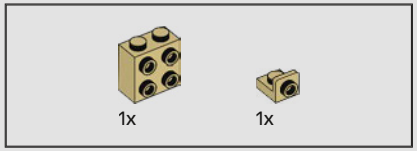


470

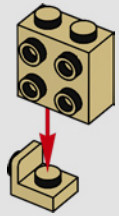

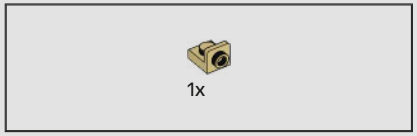


471



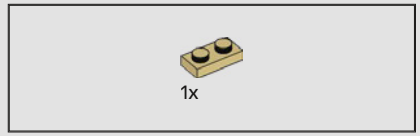


472

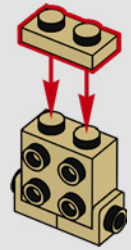

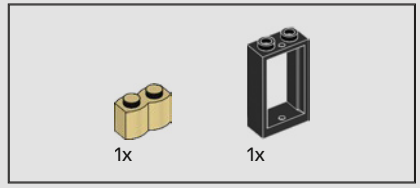


473

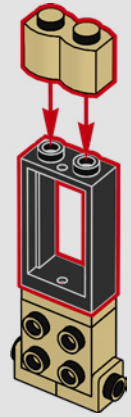


2x

474

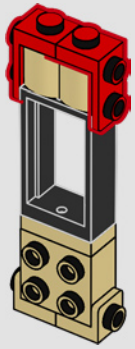


1x


2x

475

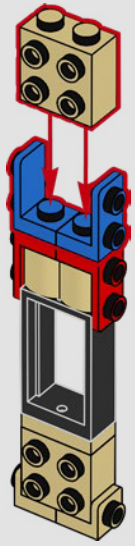


6x

476

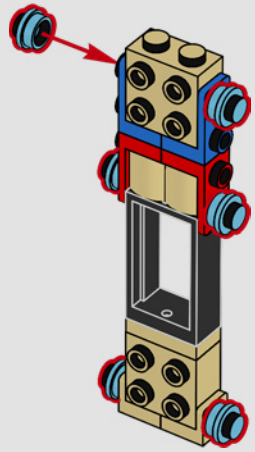


2x

477

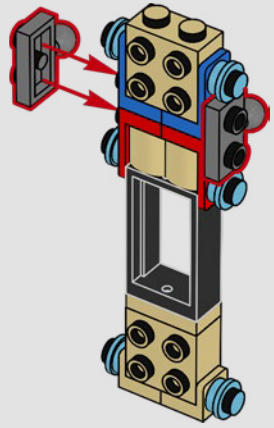

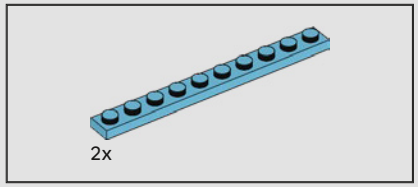


478

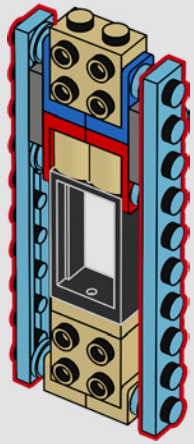

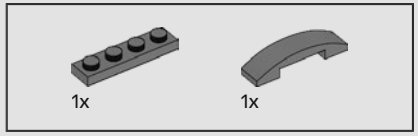


479

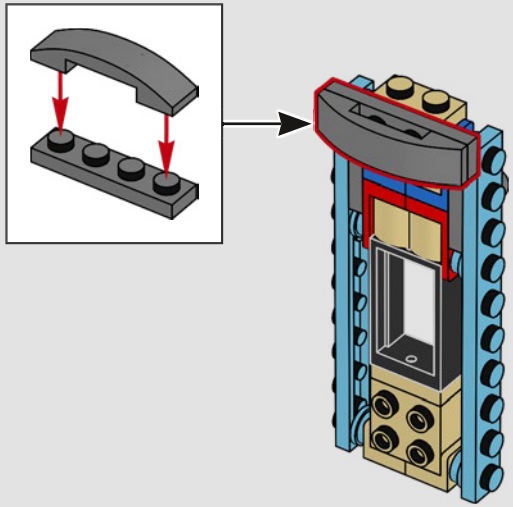

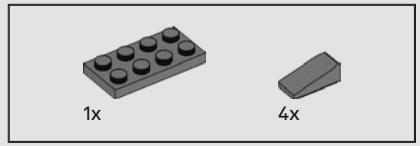


480

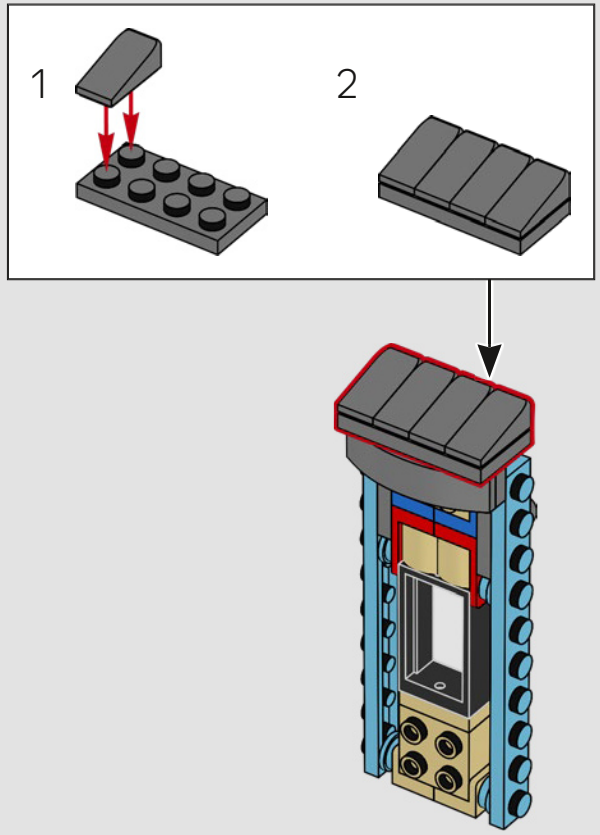

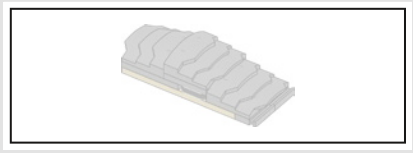

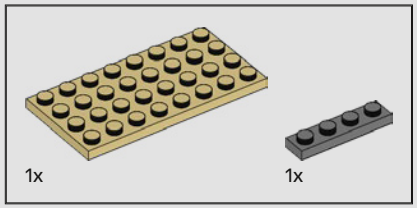


481

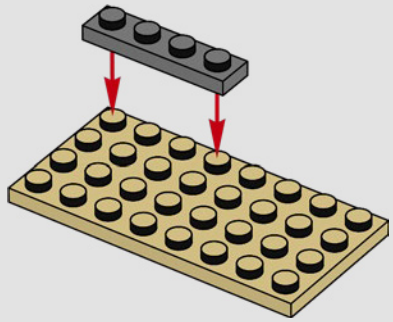

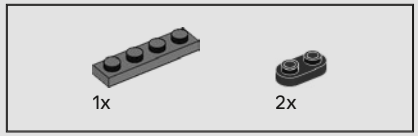


482

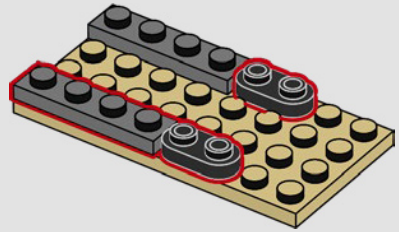

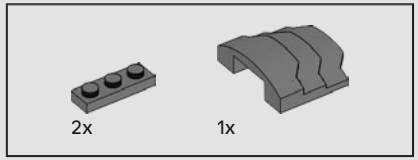


483

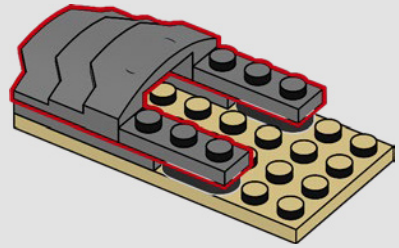

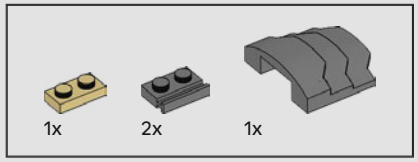


484

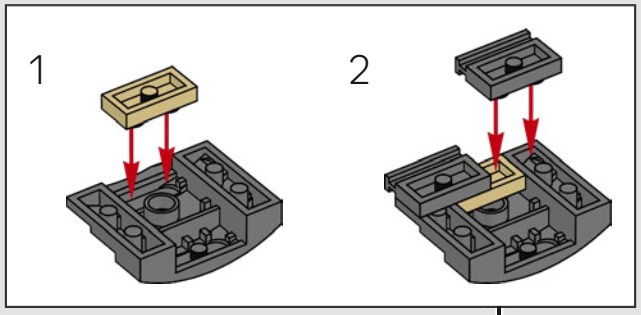


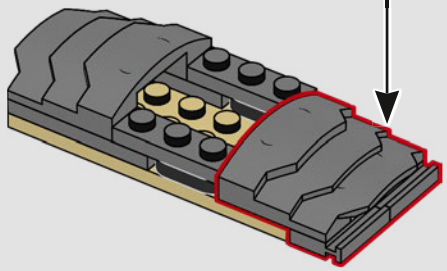

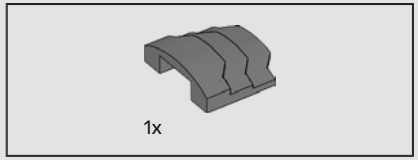


485

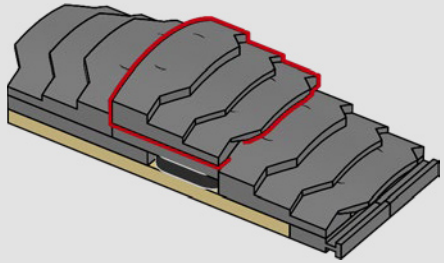

486



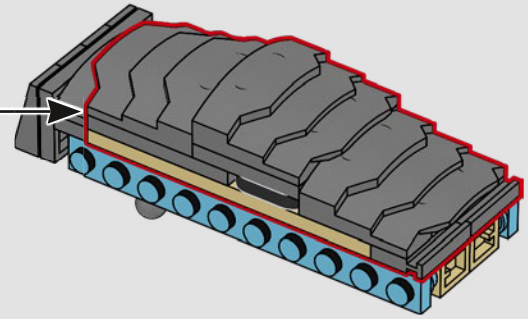

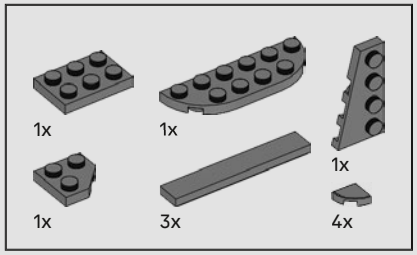


487

1

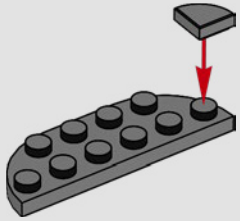

2

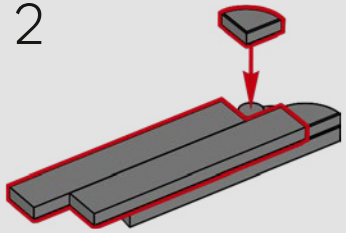

3

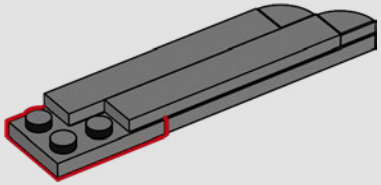

4

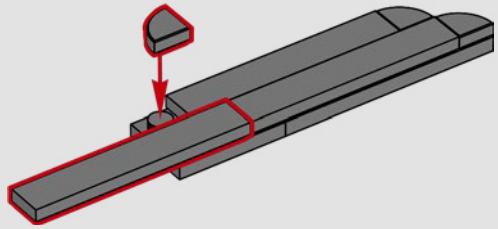

5

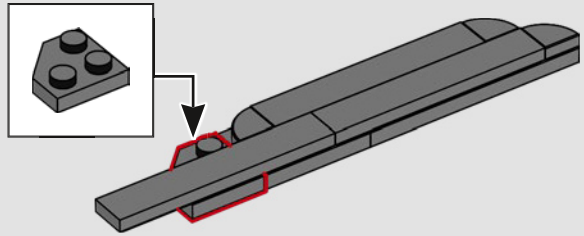

6

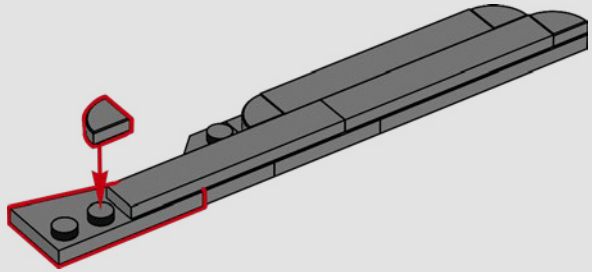

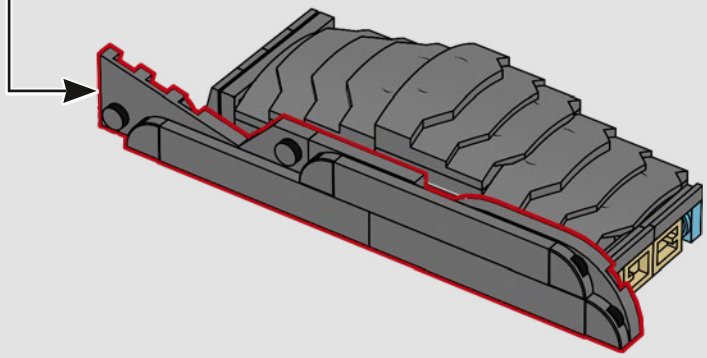

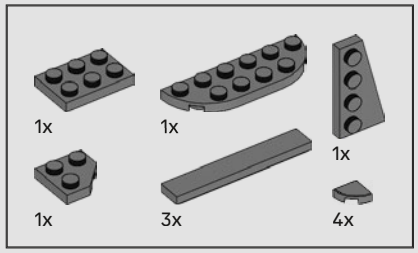


488

1

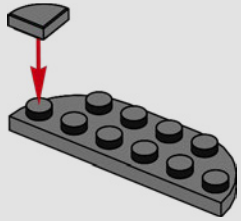

2

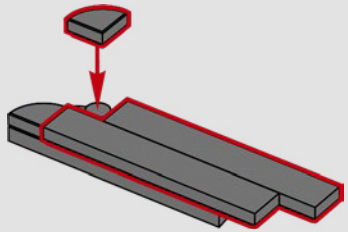

3

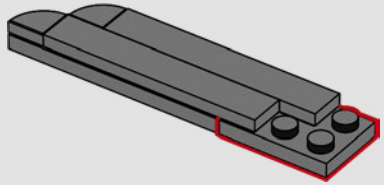

4

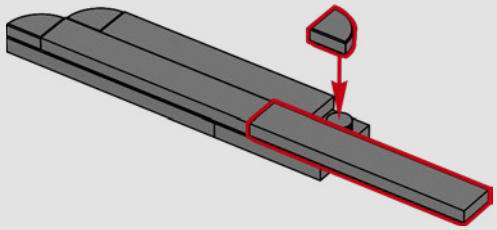

5

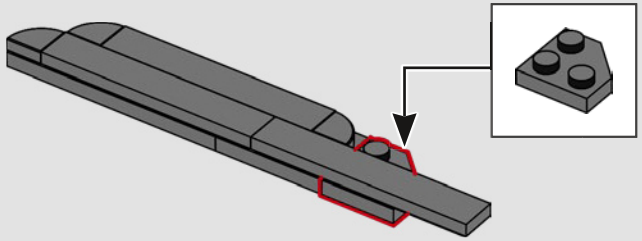

6

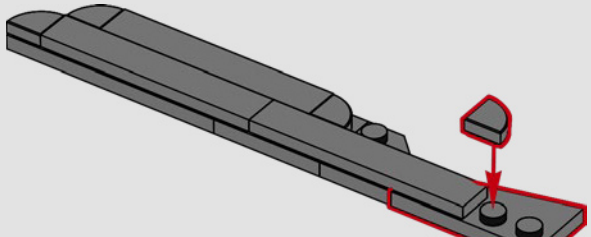

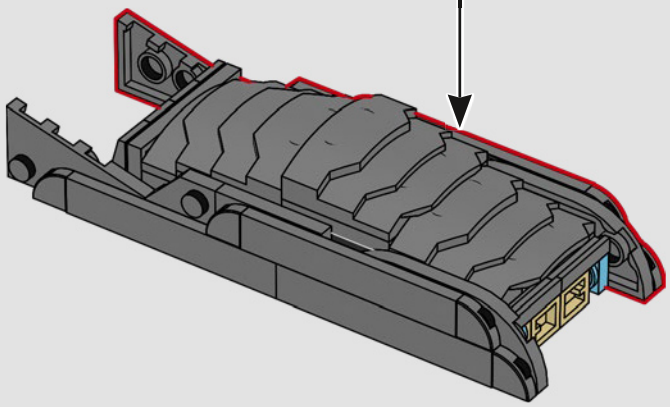

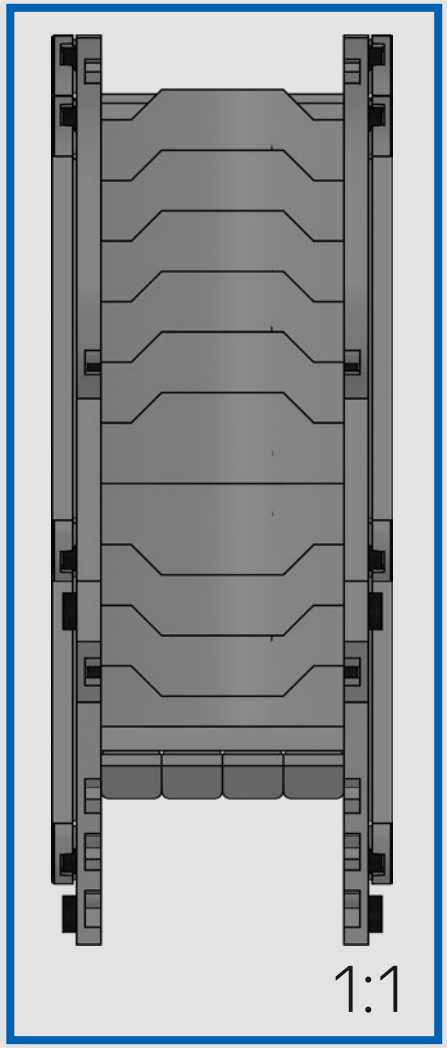

1:1

489

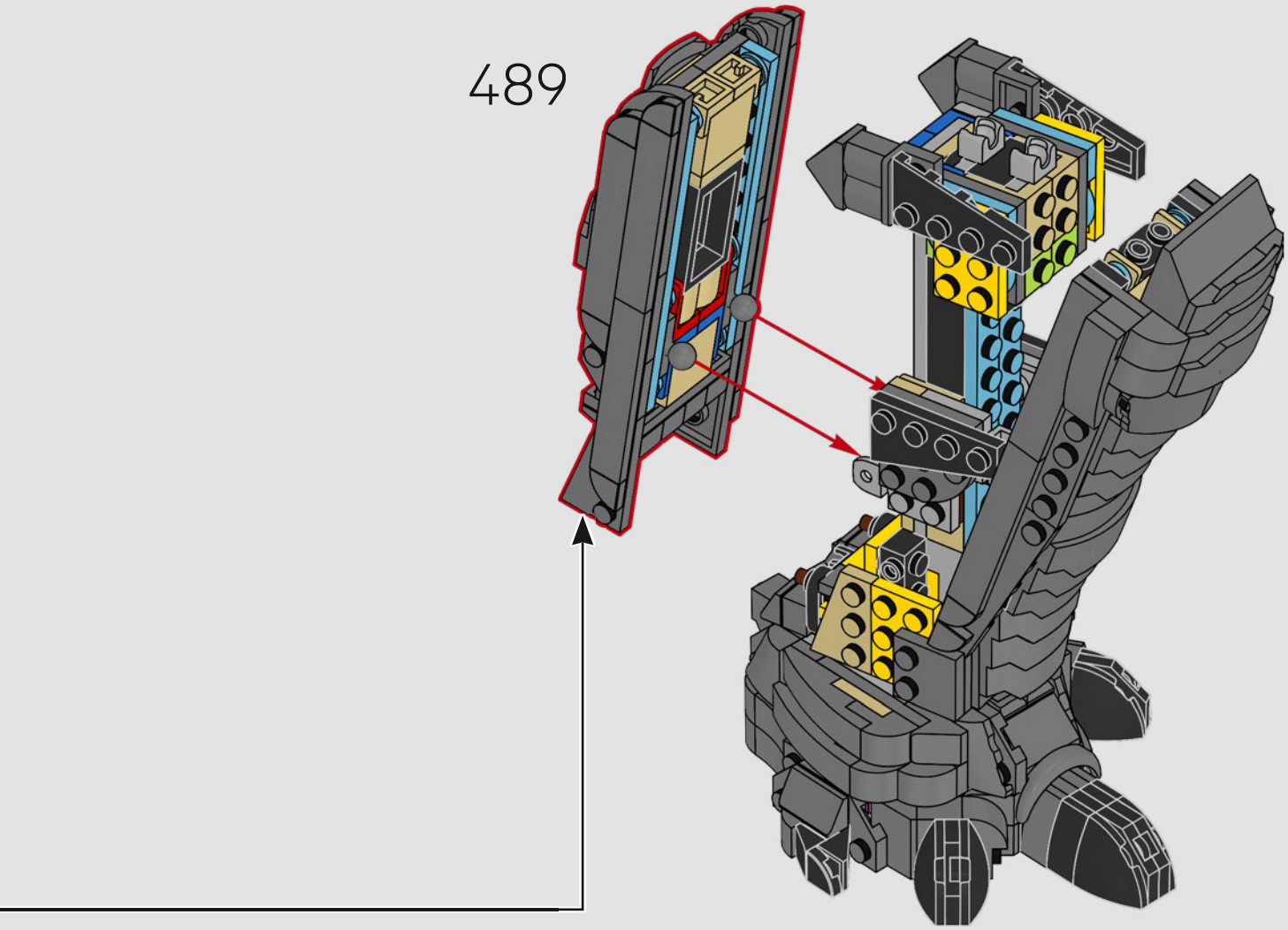

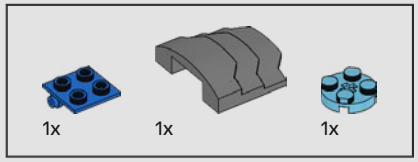


490

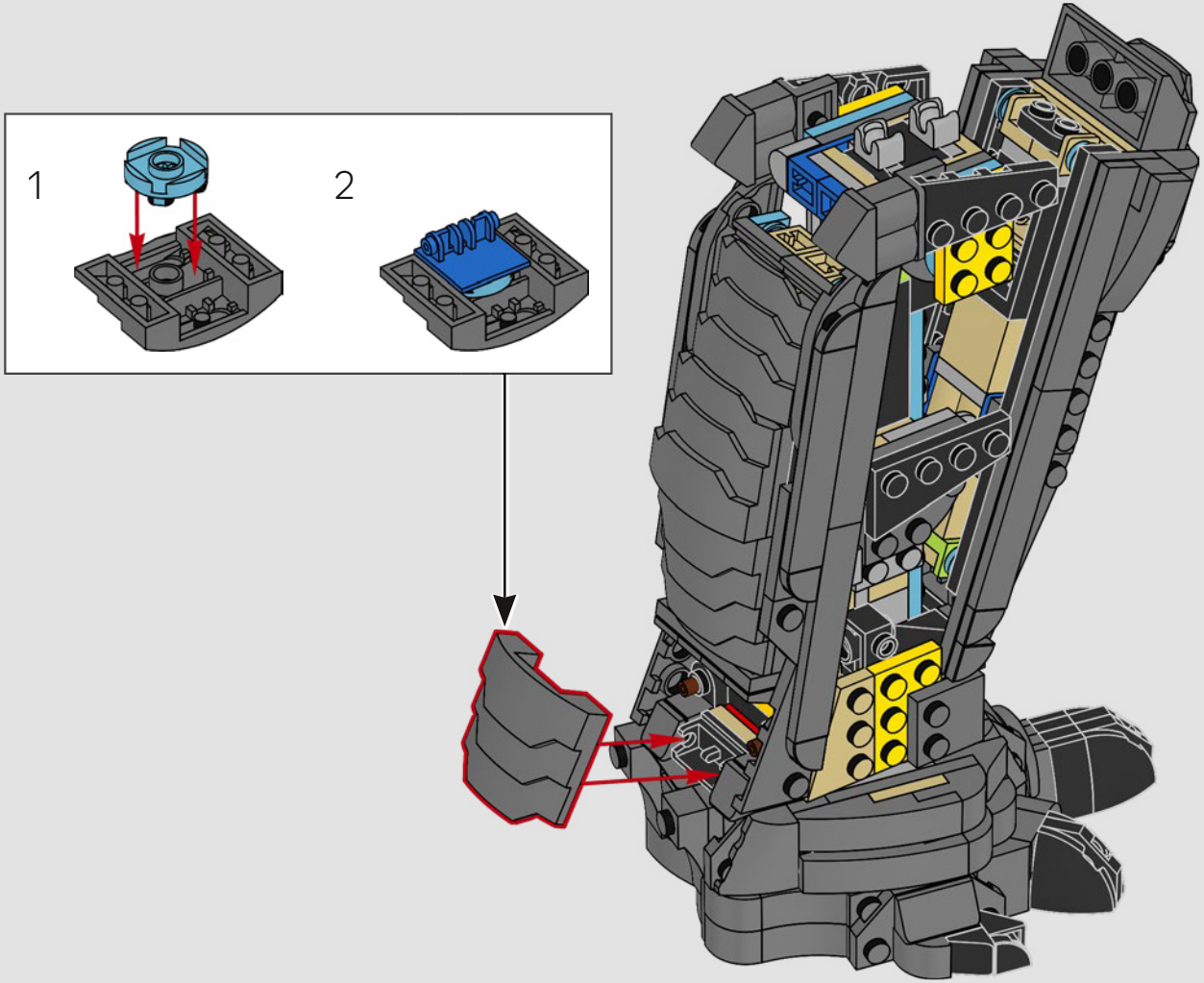




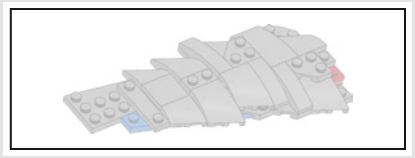

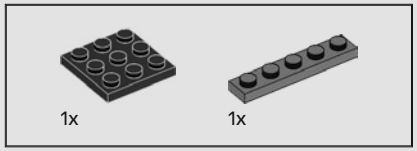


491

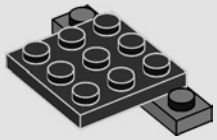

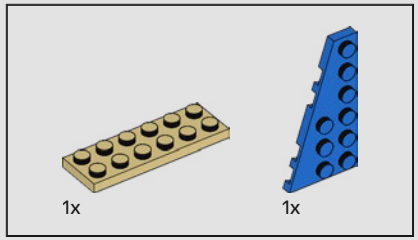


492

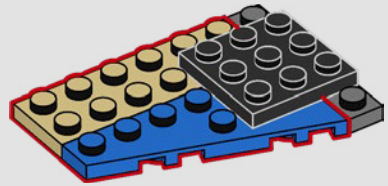

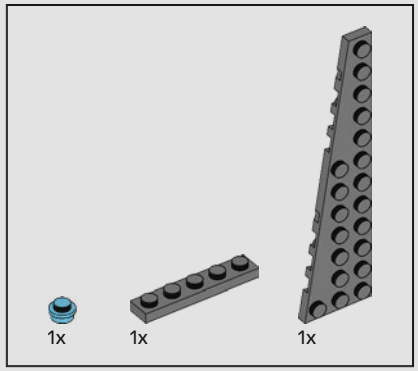


493

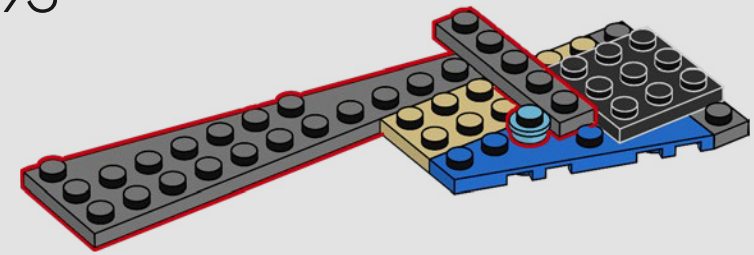

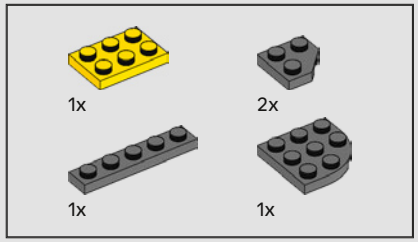


494

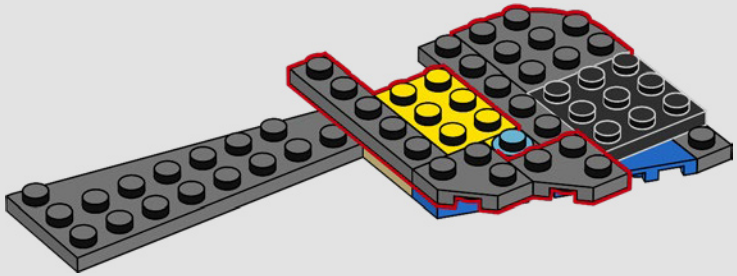

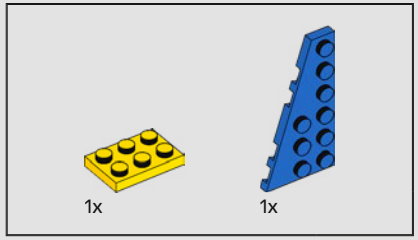


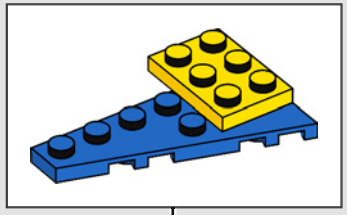

495

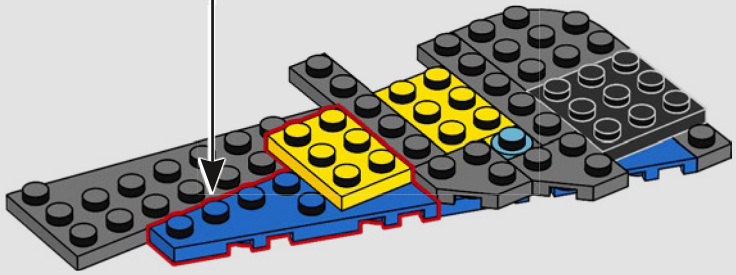

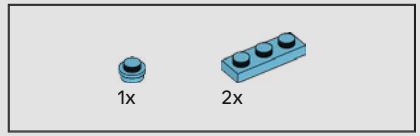


496

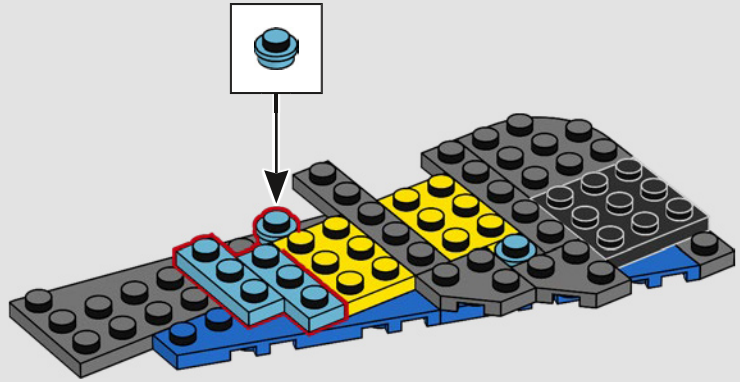

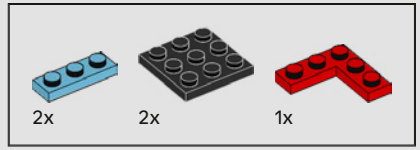


497

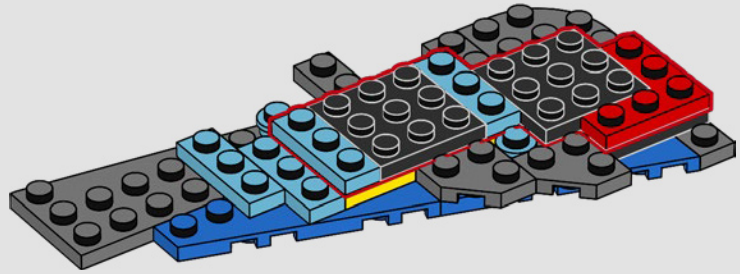

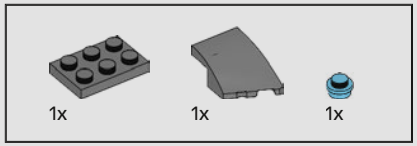


498

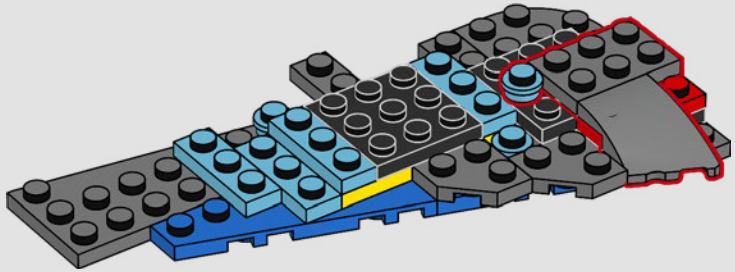

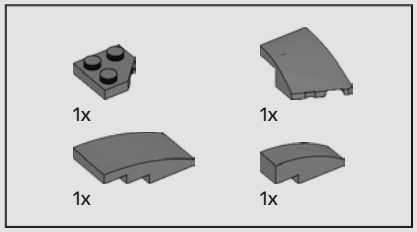


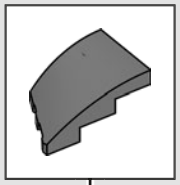

499

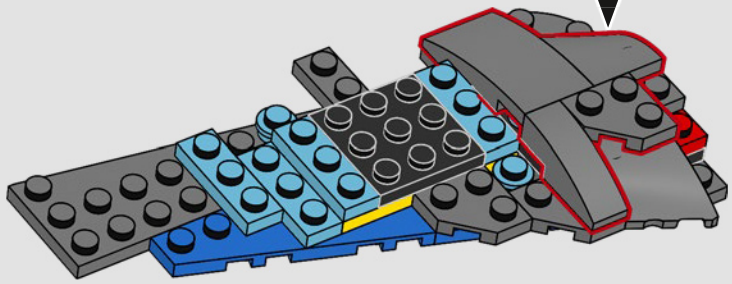

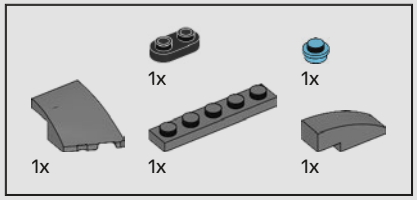


500

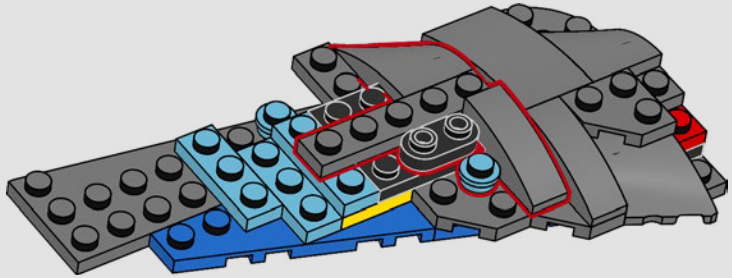

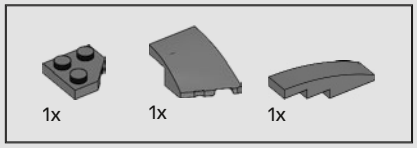


501

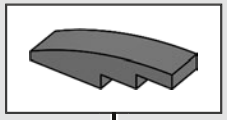

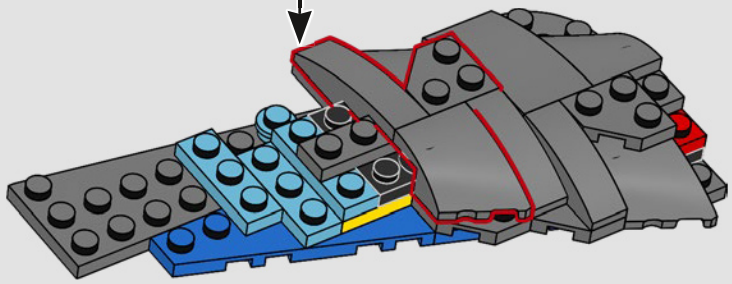

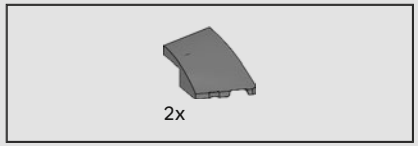


502

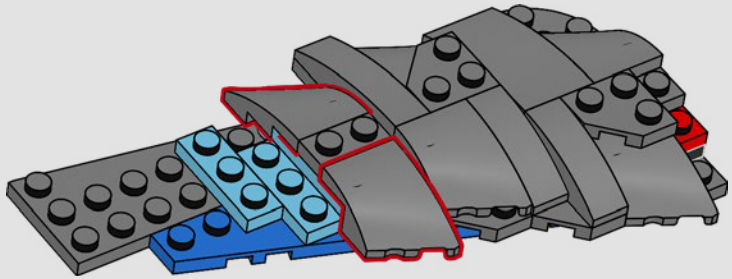

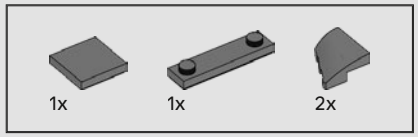


503

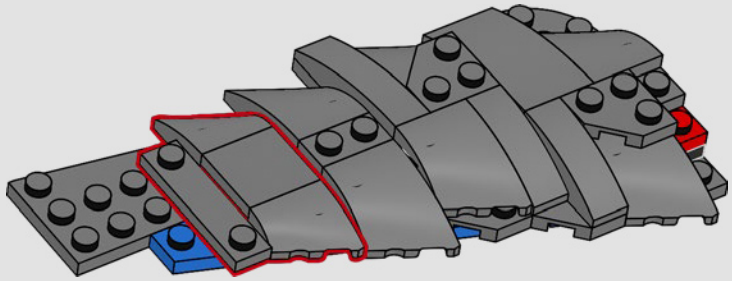

504

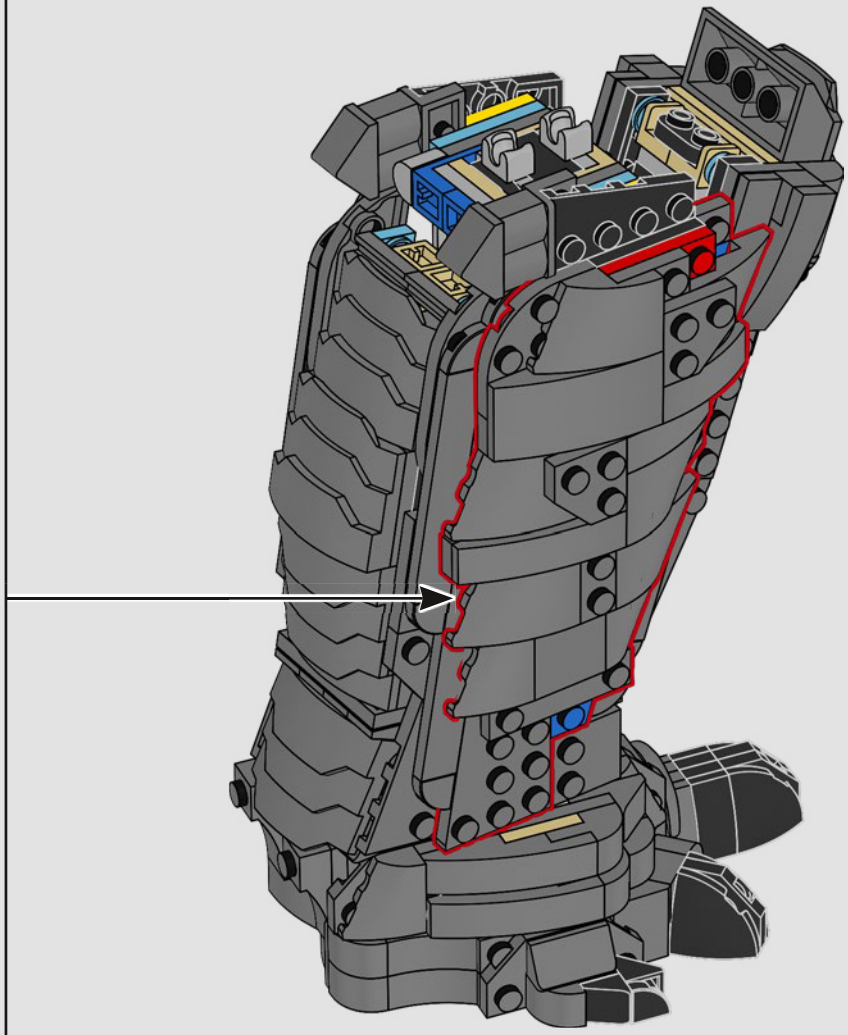

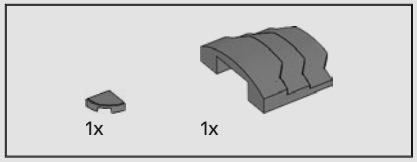


505

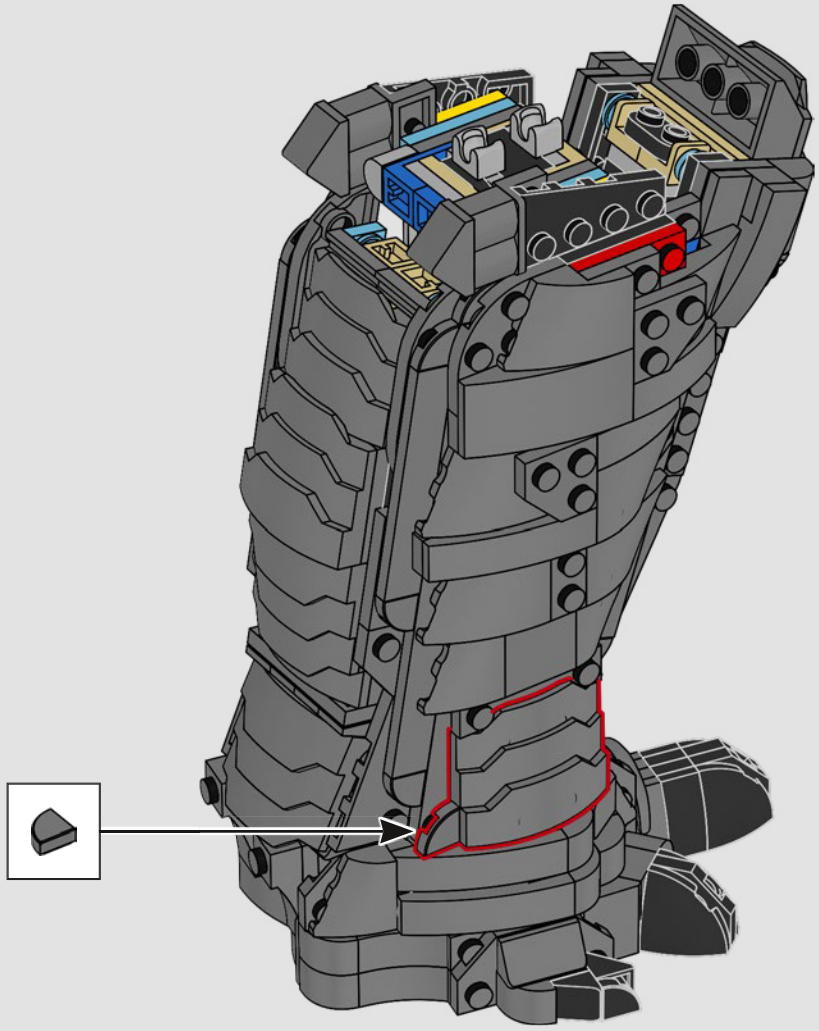

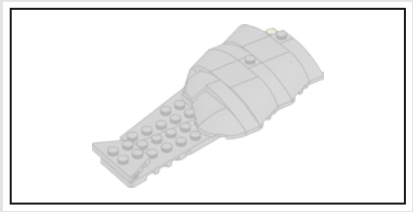

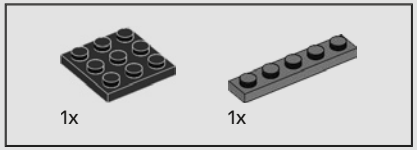


506

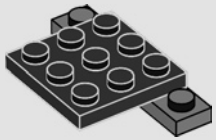

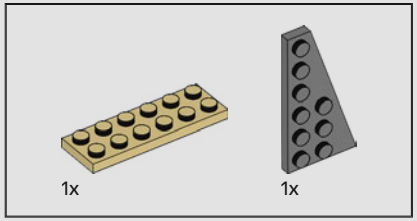


507

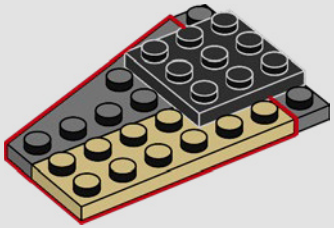

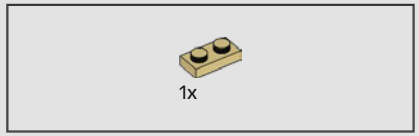


508

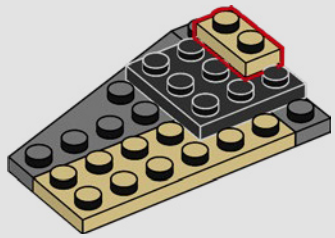

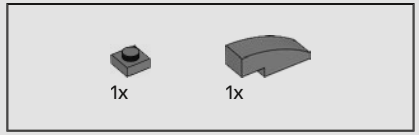


509

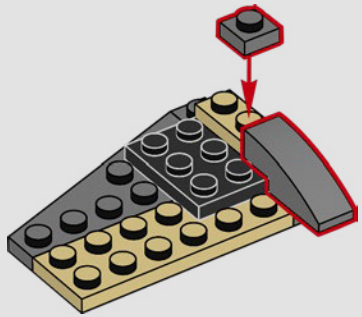

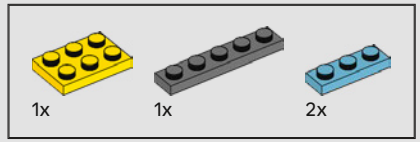


510

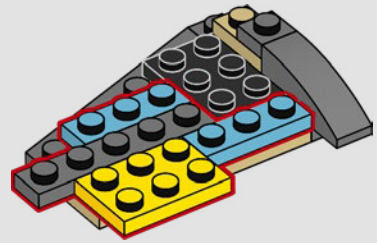

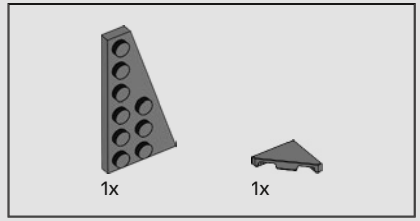


511

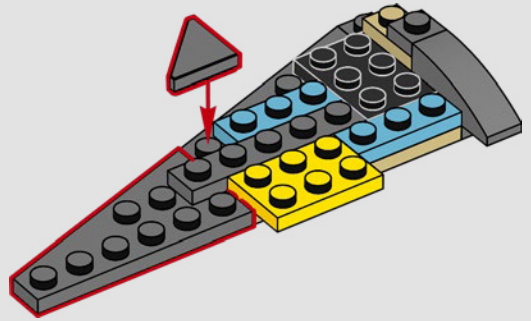

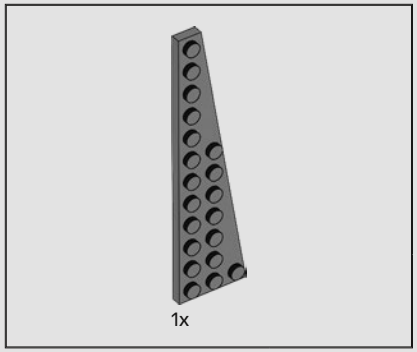


512

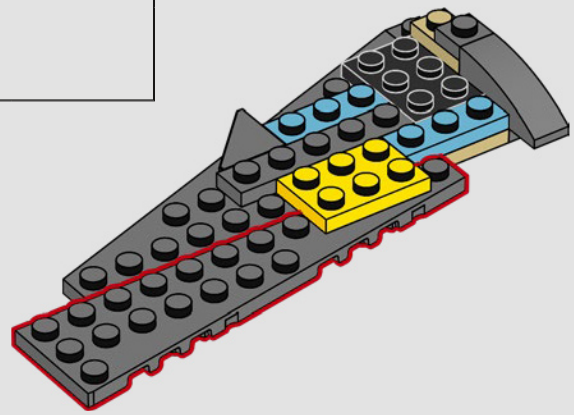

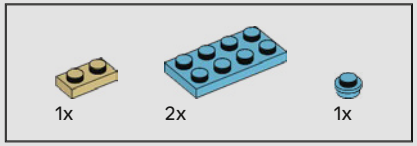


513

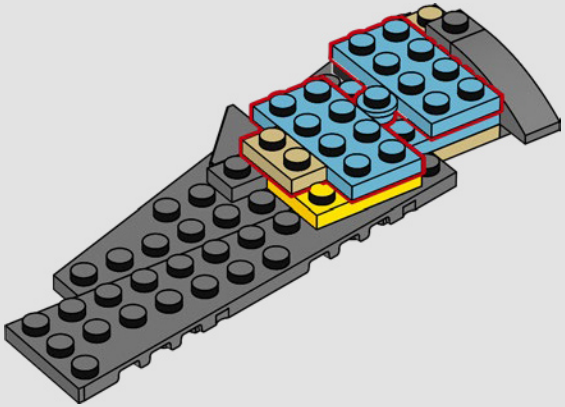

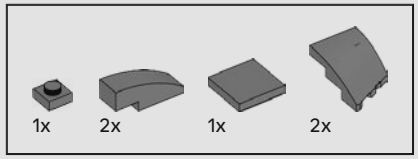


514

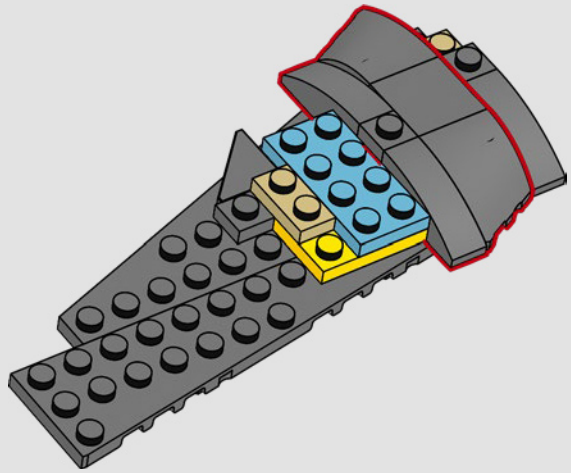

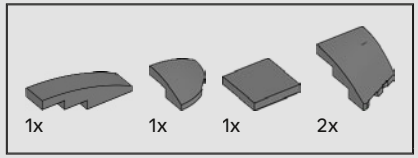


515

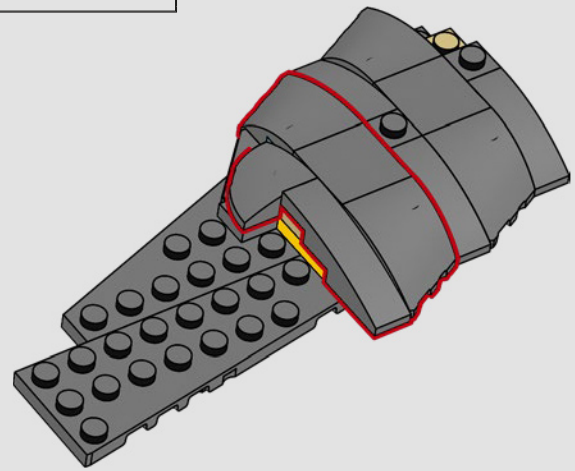




516

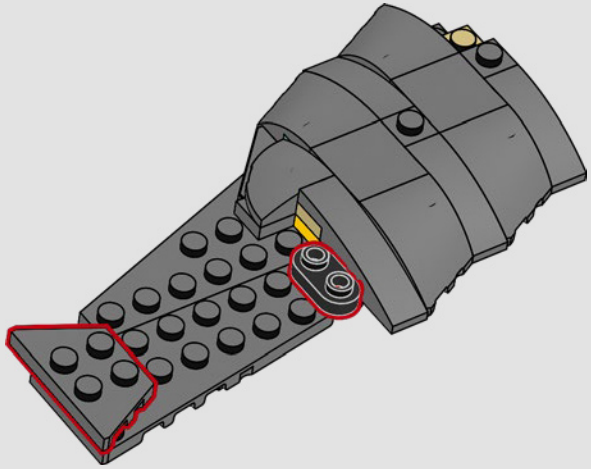

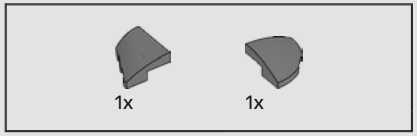


517

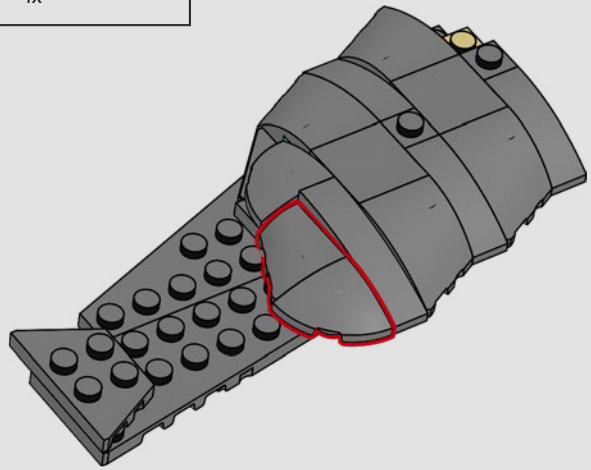

518

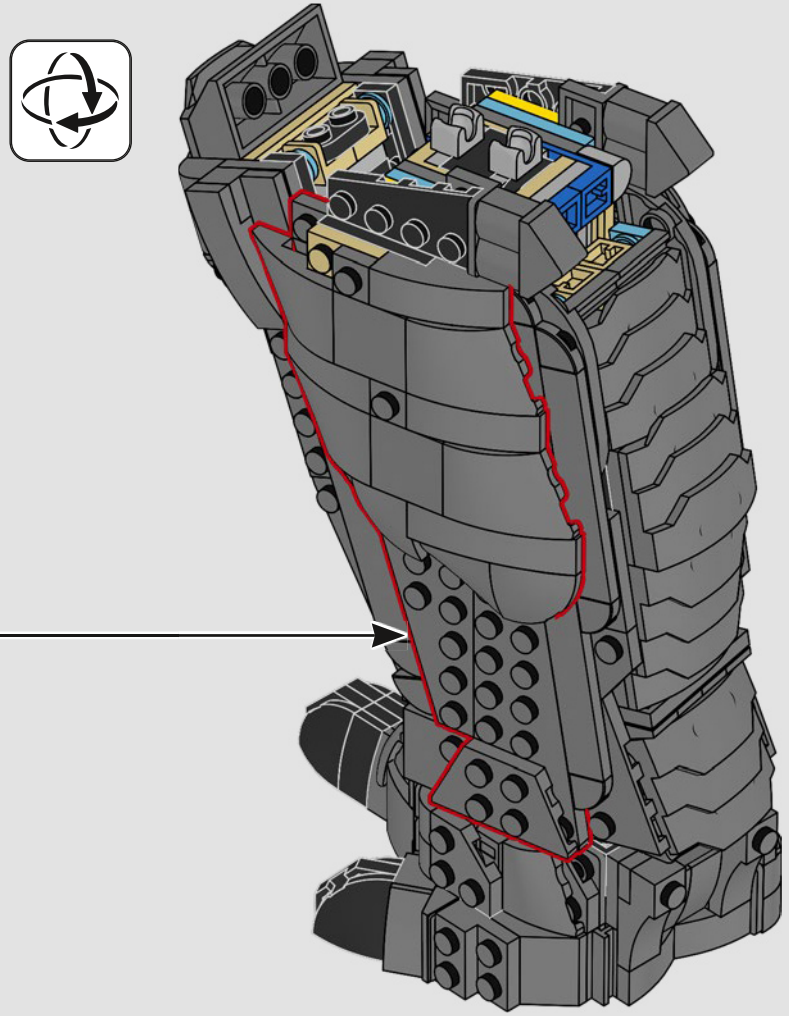




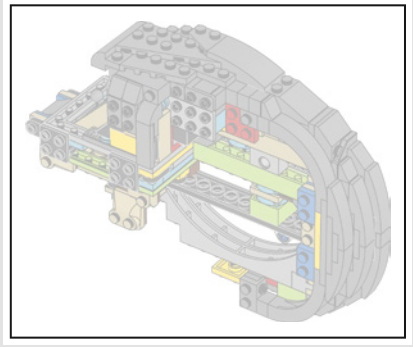

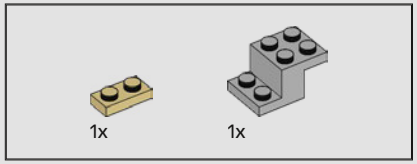


519

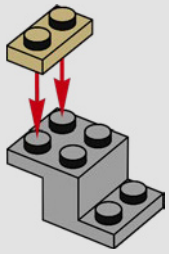

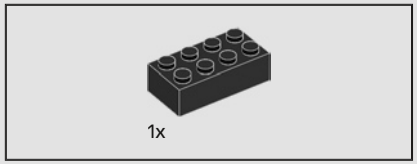


520

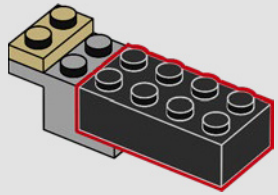

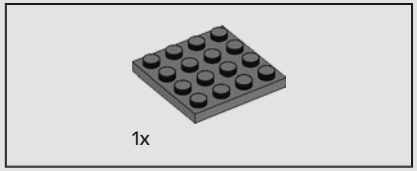


521

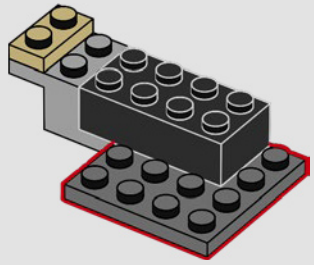

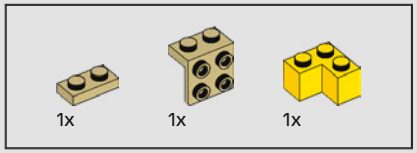


522

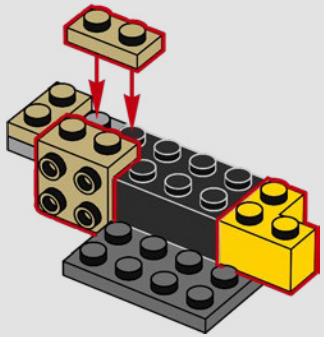

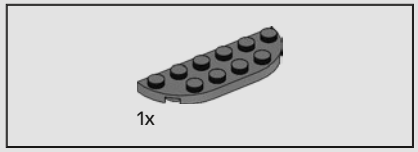


523

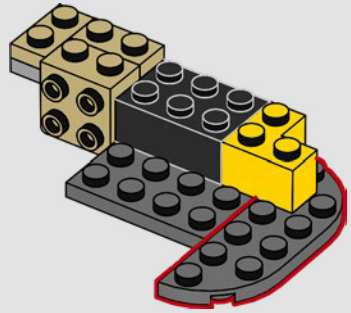

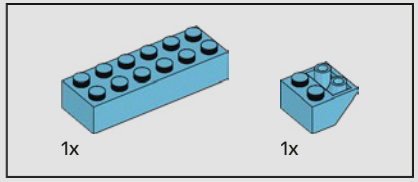


524

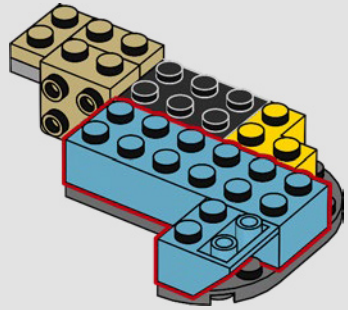

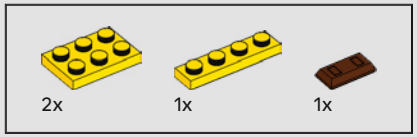


525

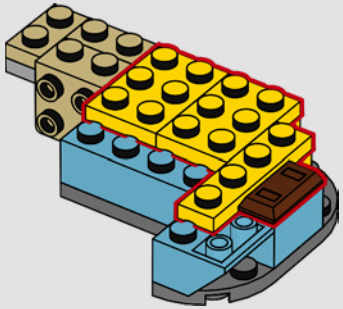

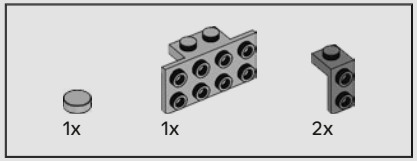


526

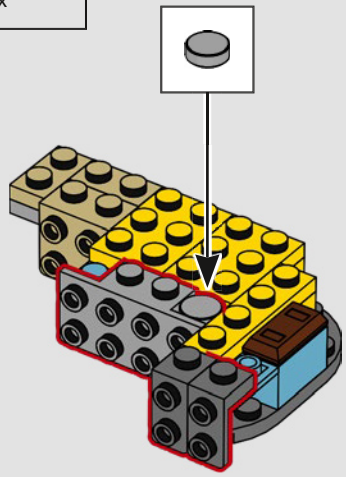

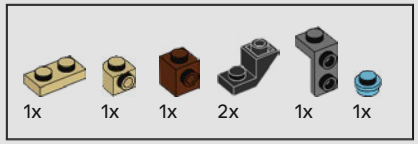


527

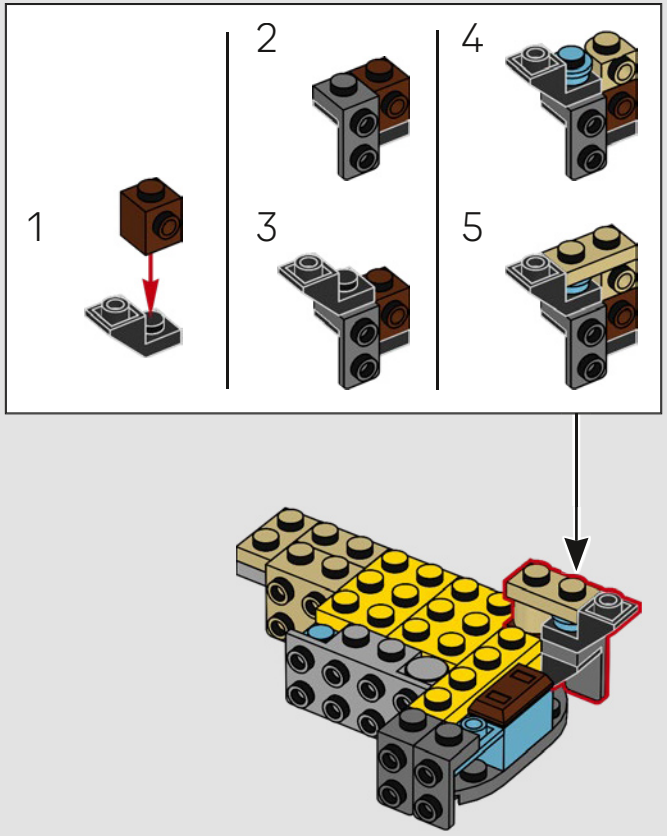

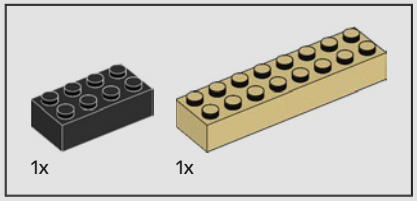


528

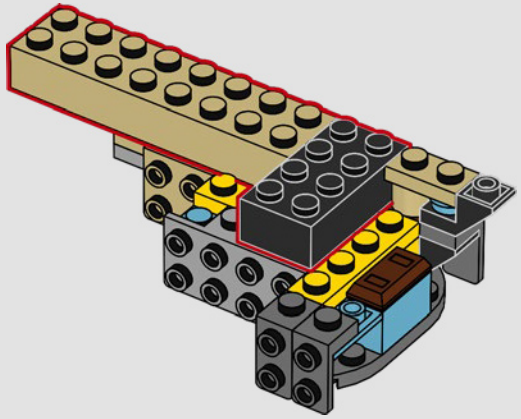

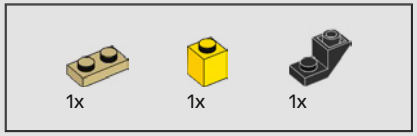


529

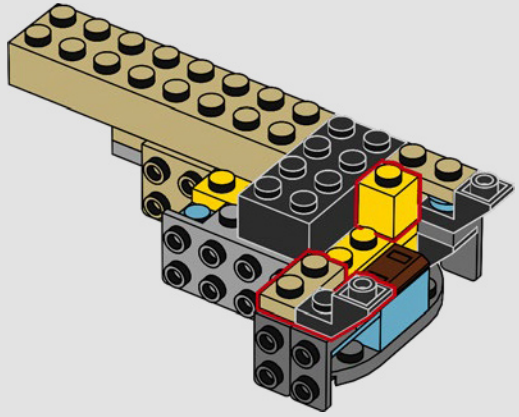

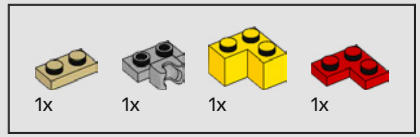


530

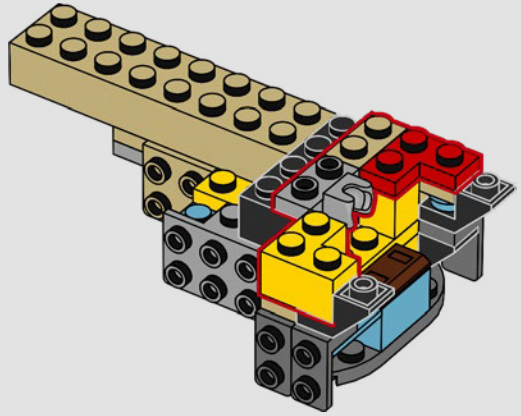

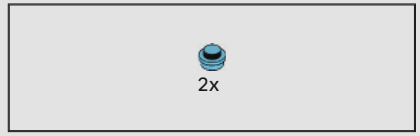


531

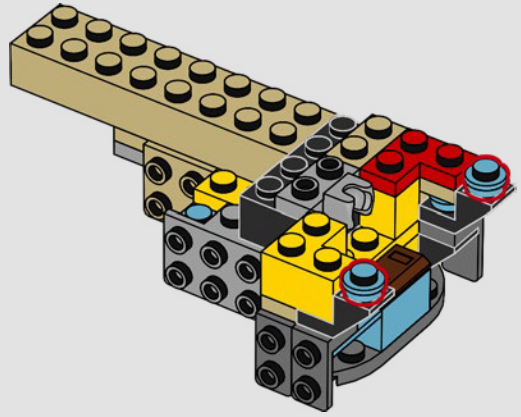

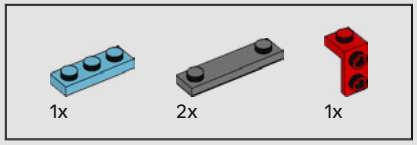


532

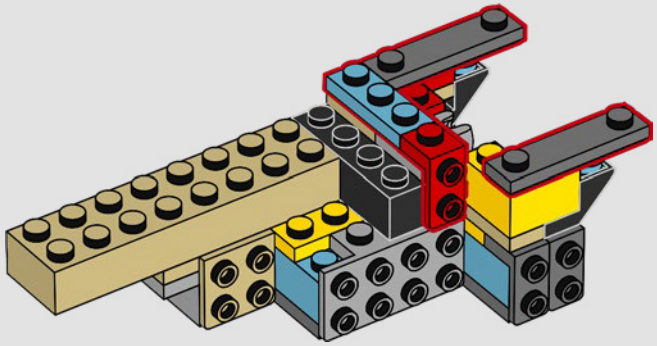

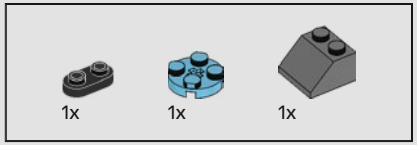


533

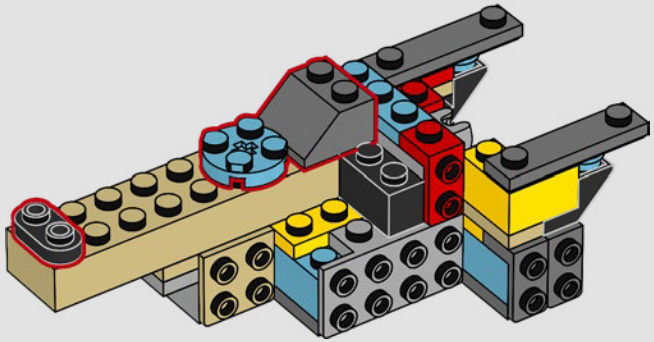

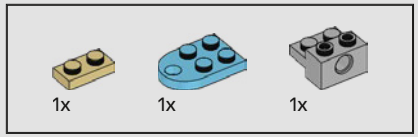


534

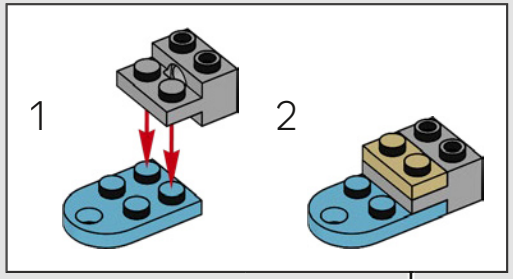


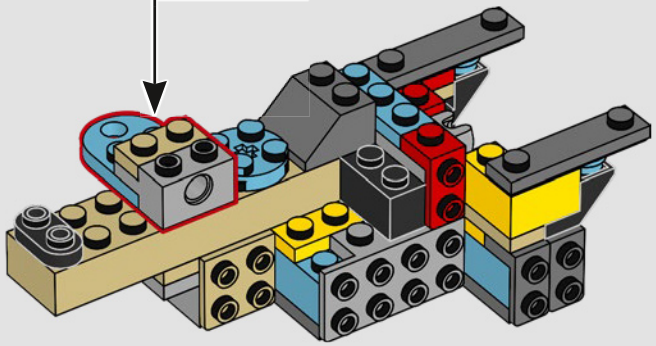

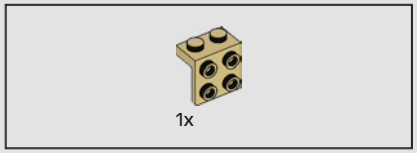


535

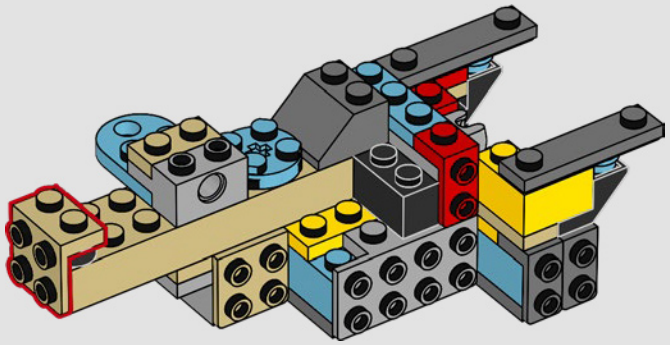

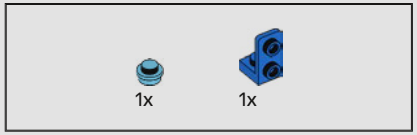


536

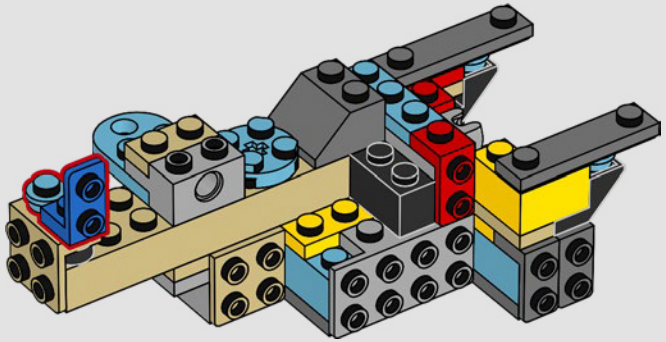

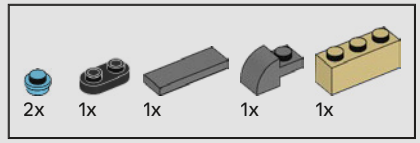


537

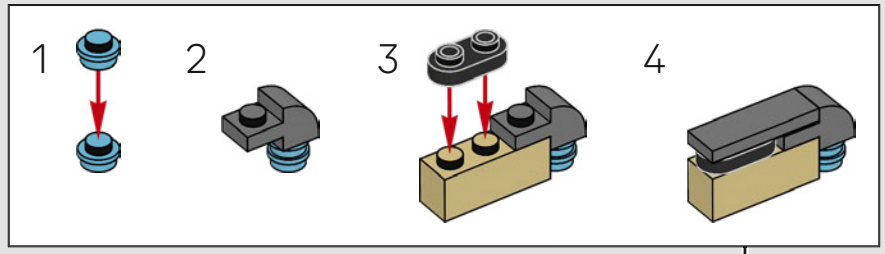


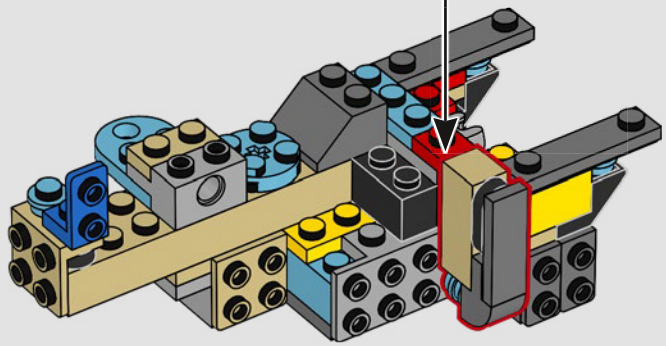

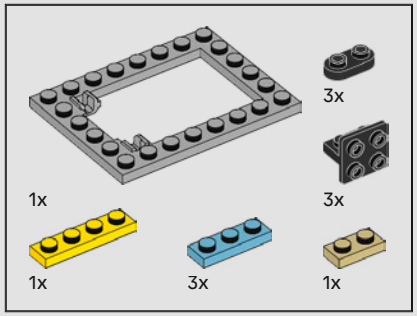


538

1

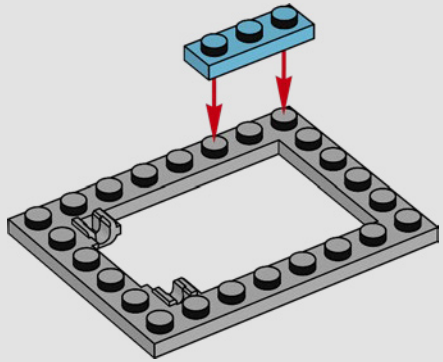

2

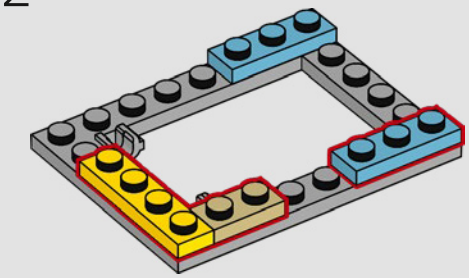

3

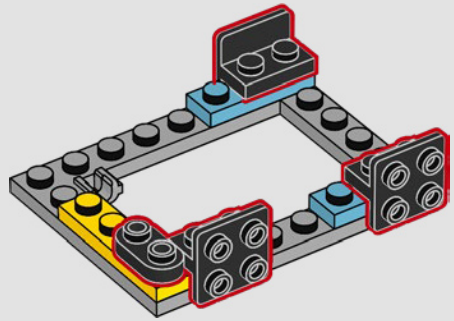

4

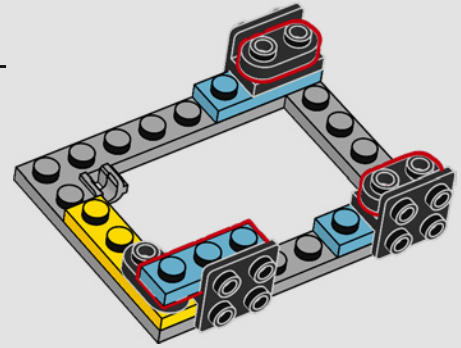

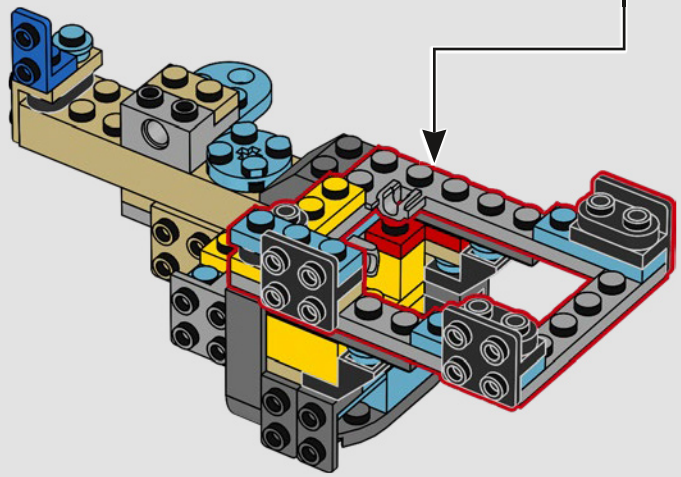

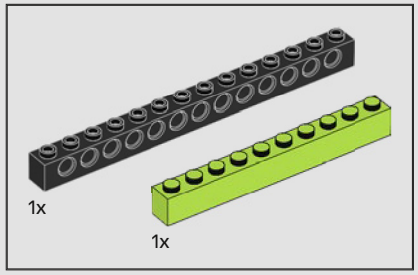


539

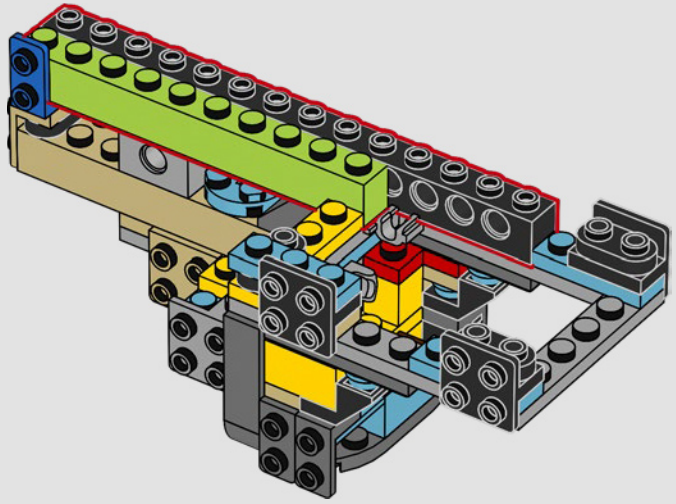

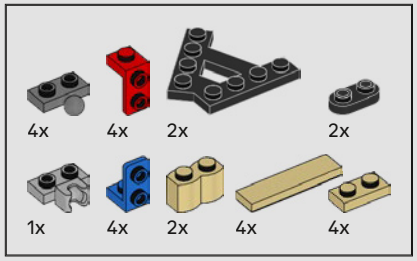


540

1

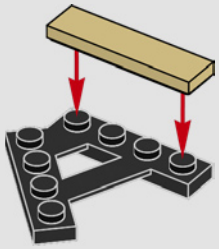

2

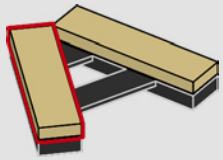

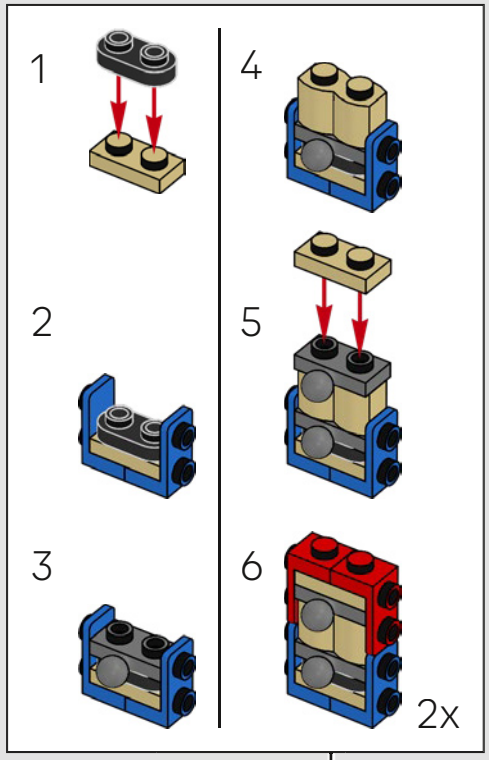


3

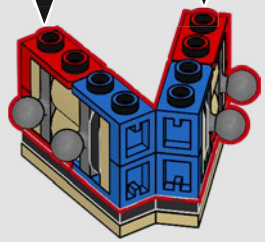

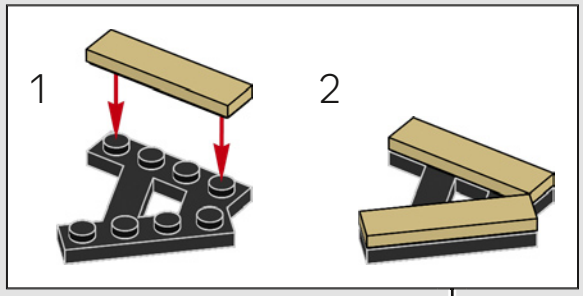


4

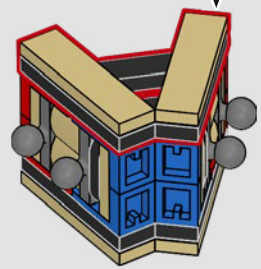

5

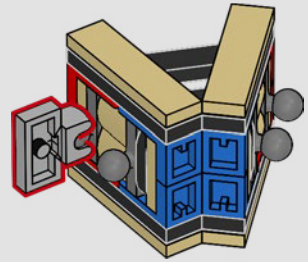

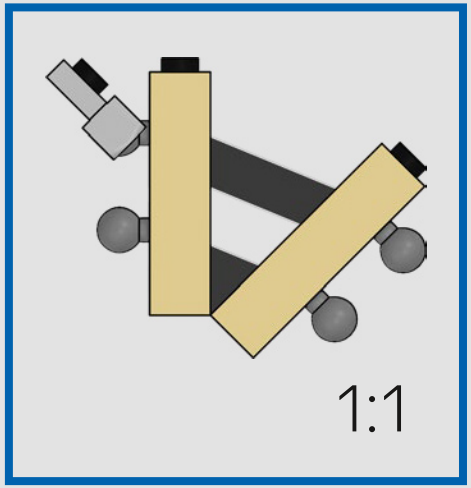


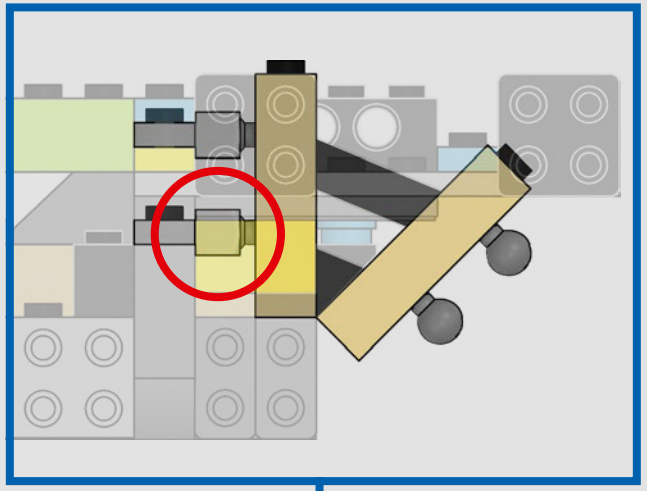

541

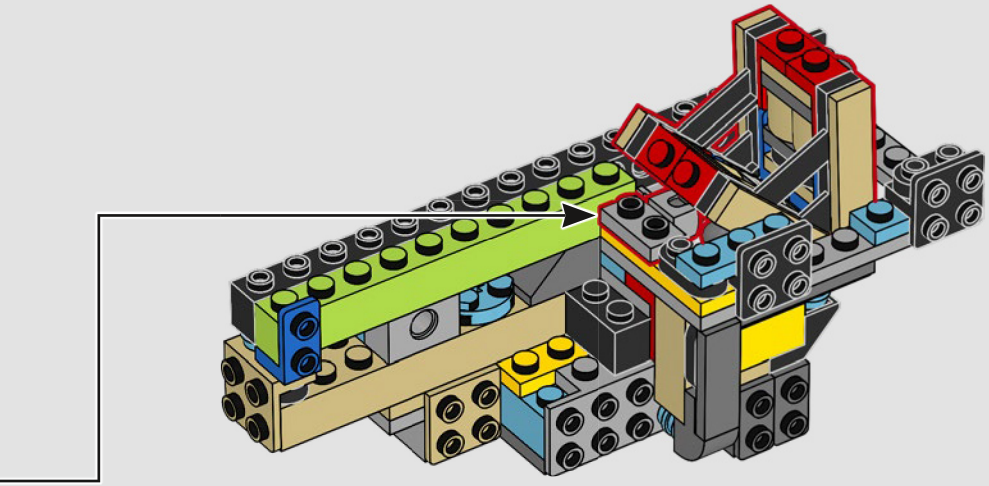

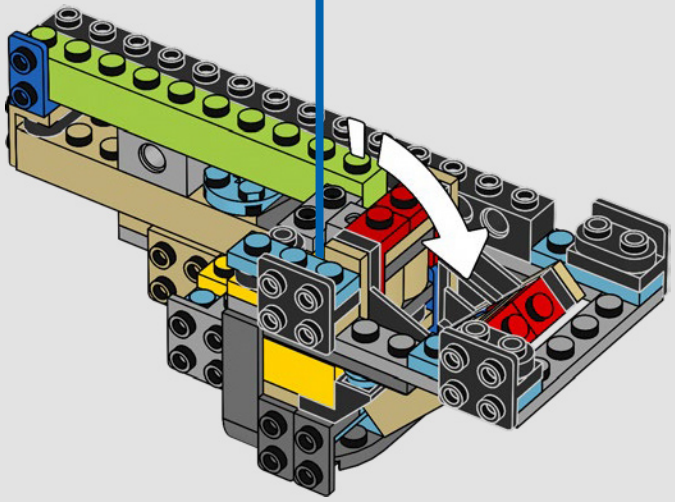

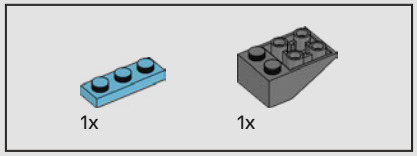


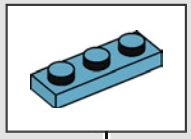

542

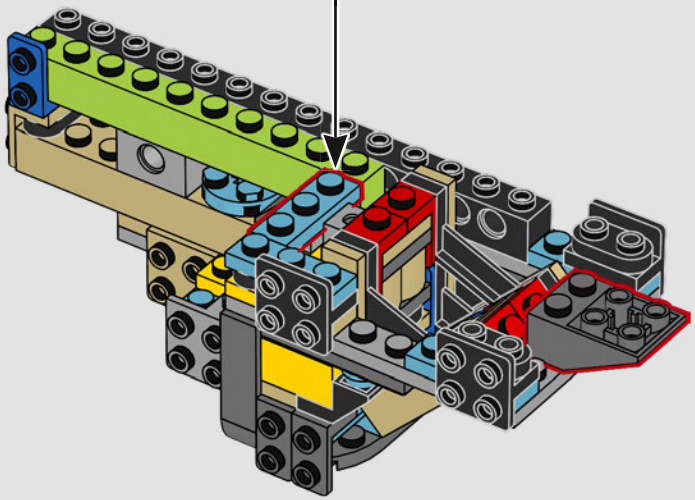

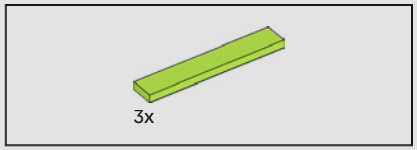


543

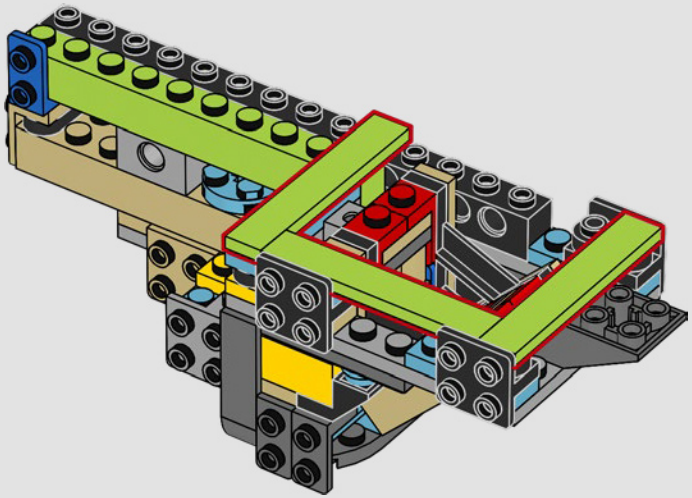

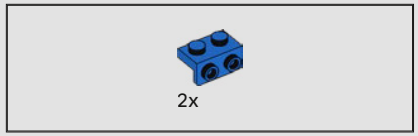


544

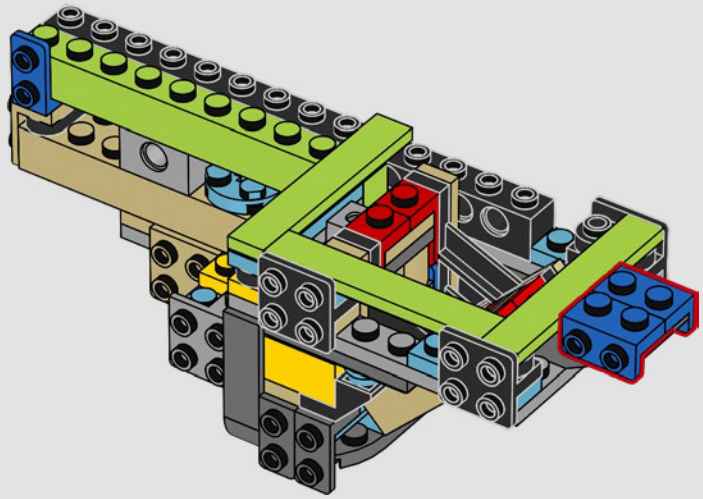




545

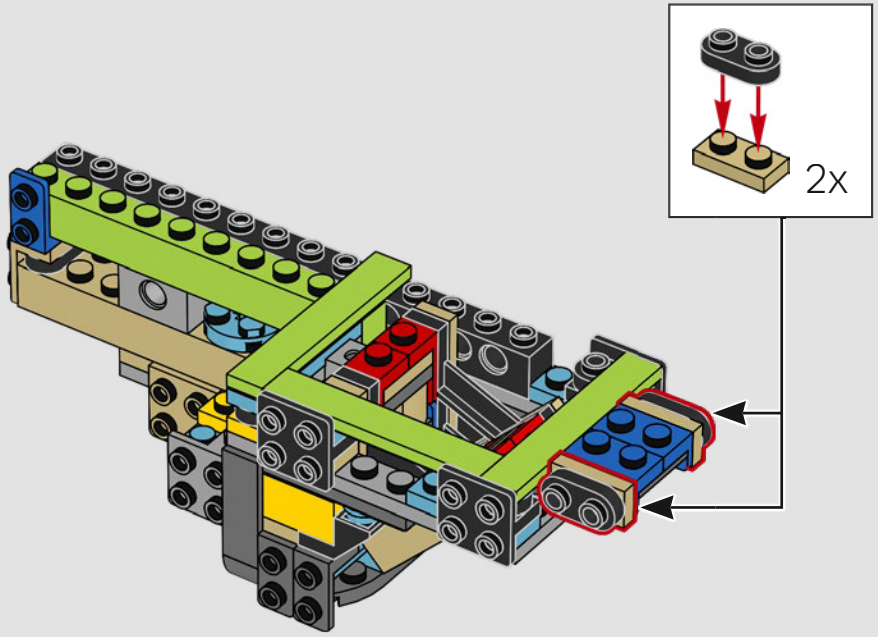


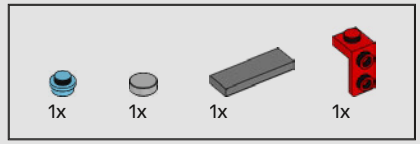


546

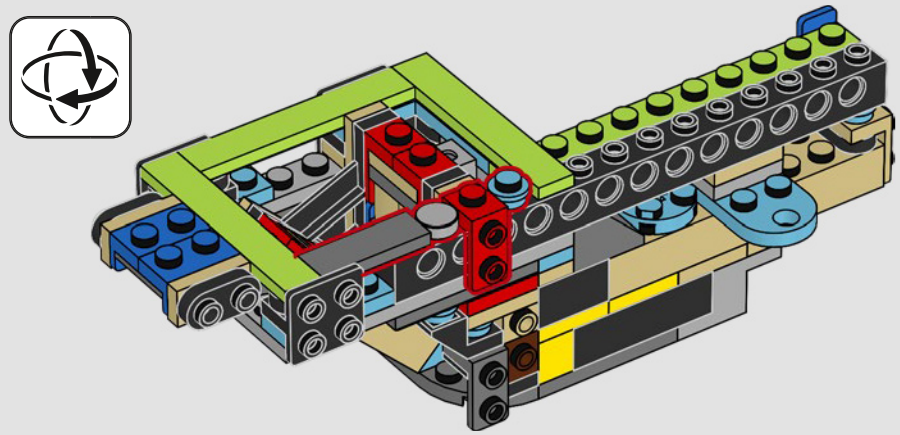




547

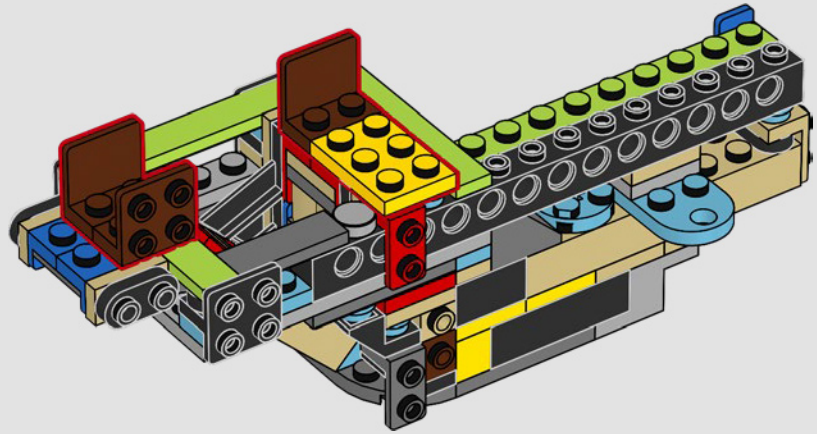

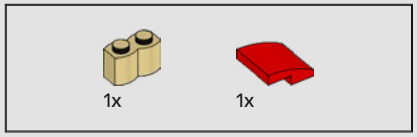


548

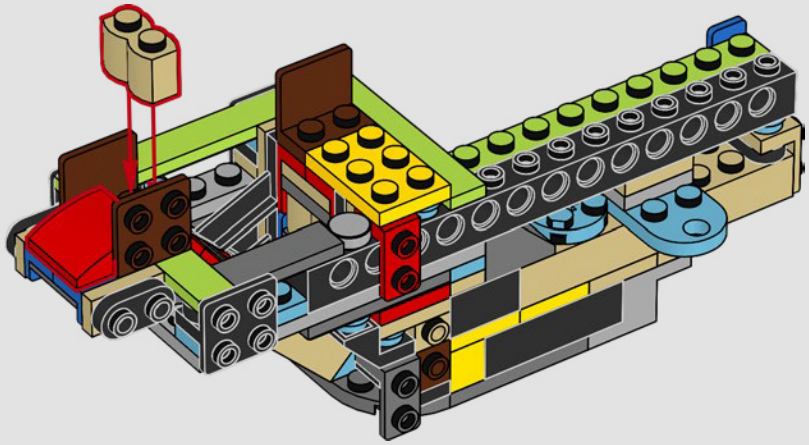

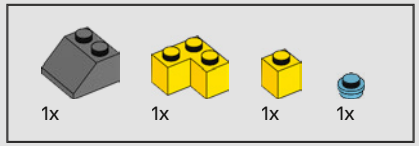


549

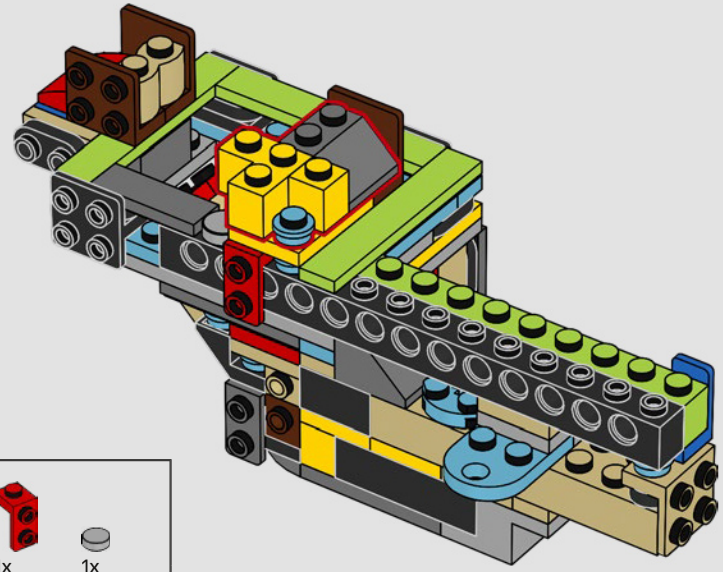

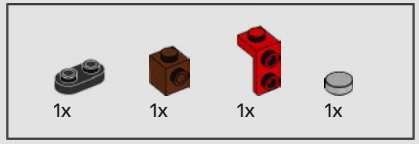


550

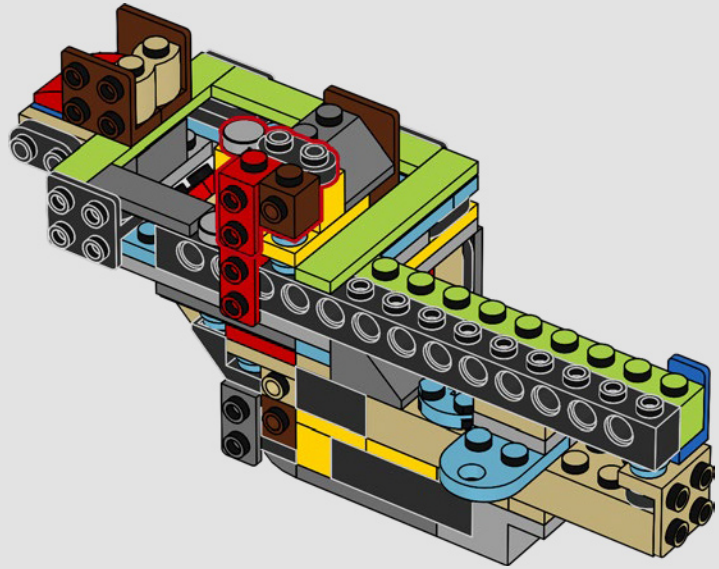

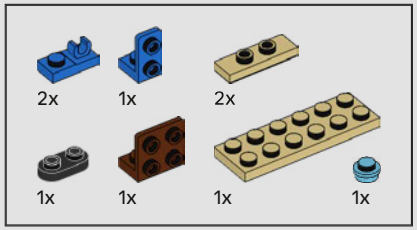


551

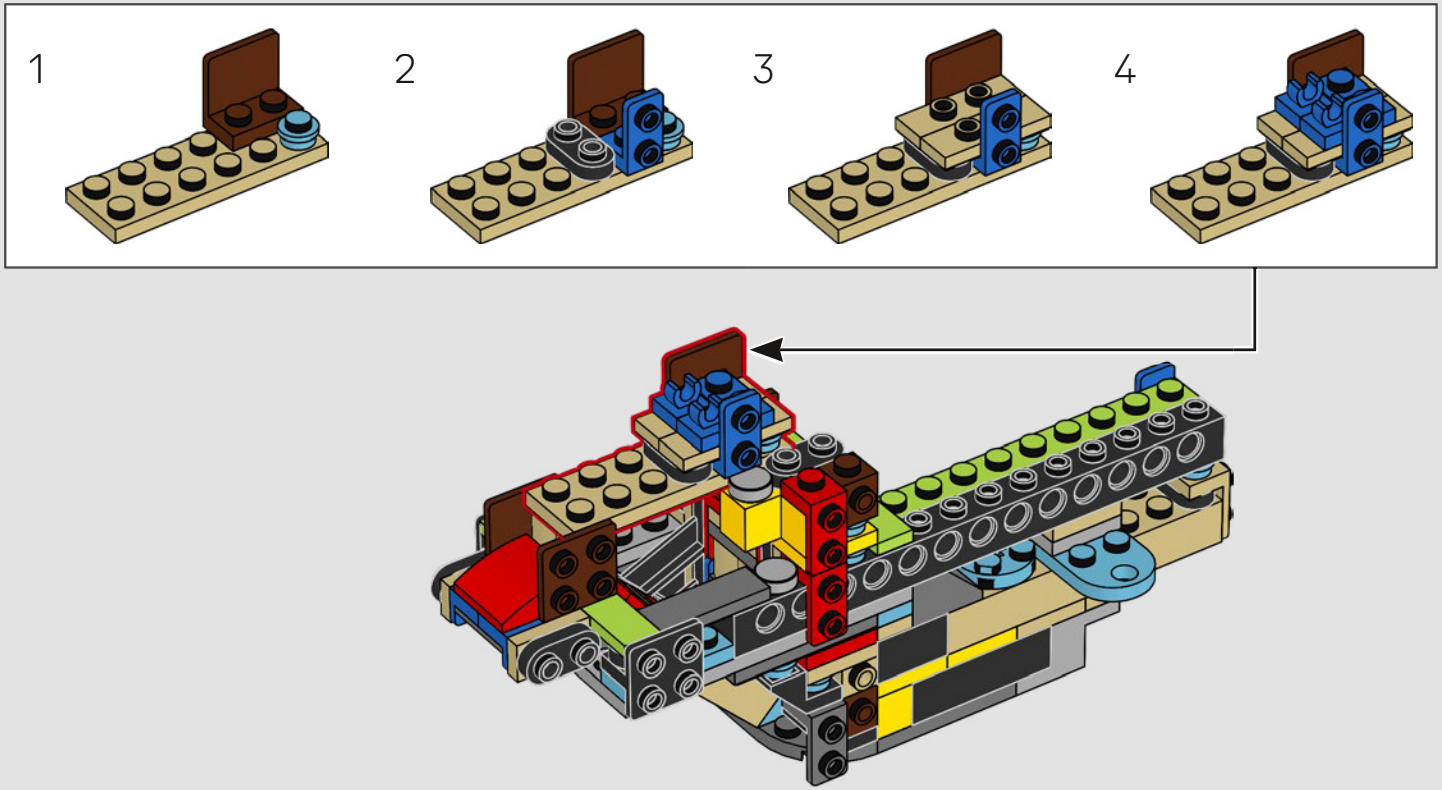

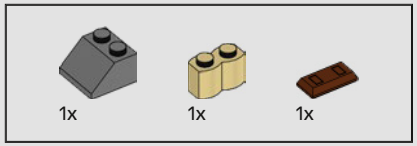


552

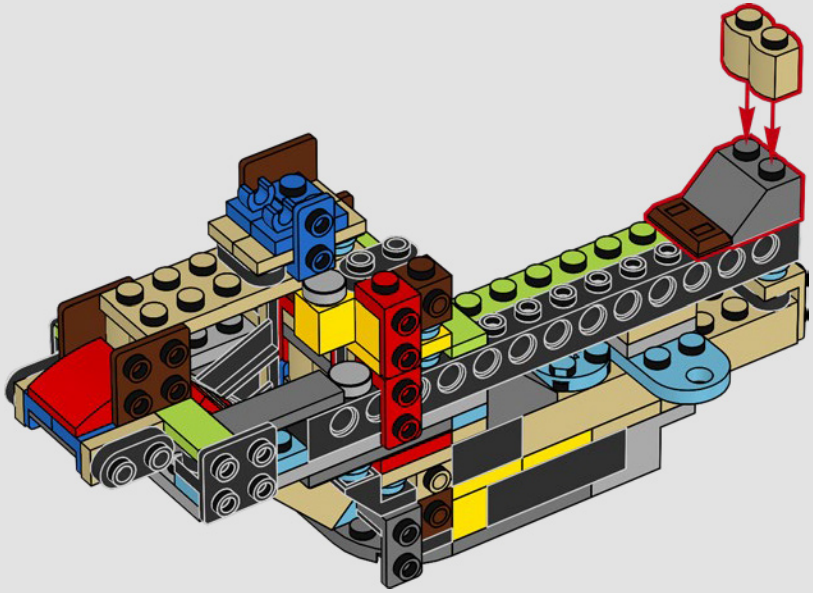

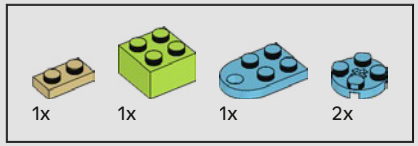


553

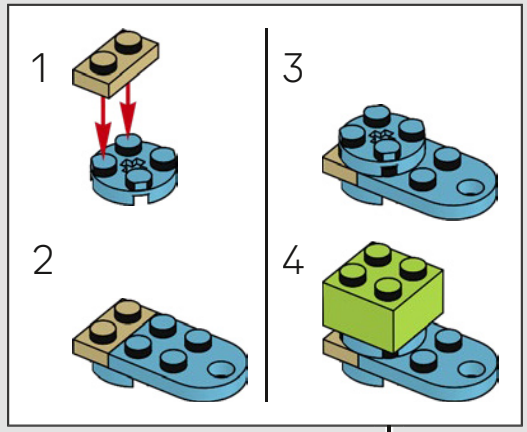


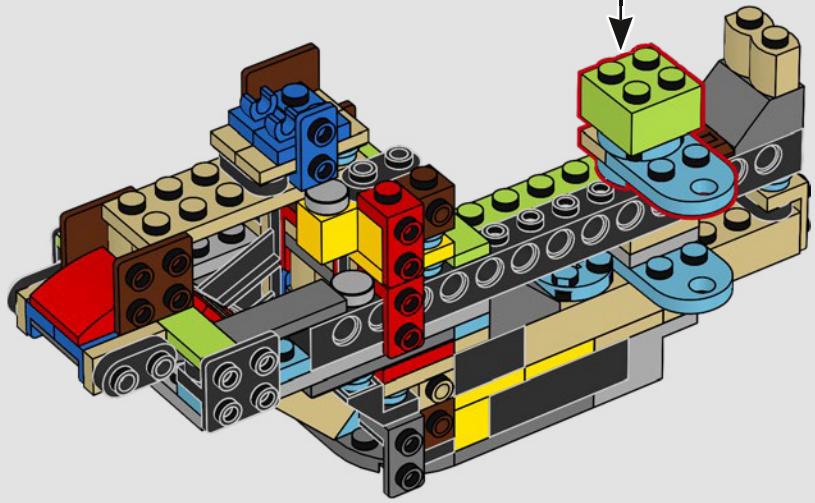

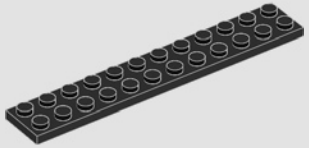


554

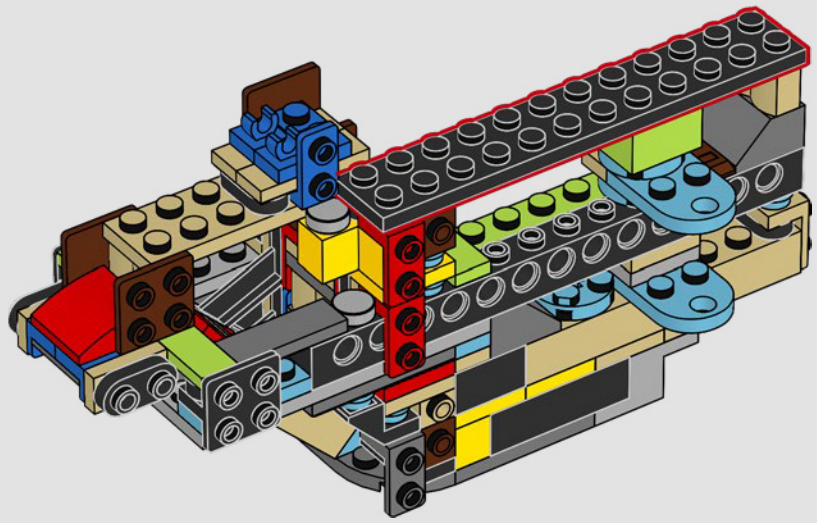

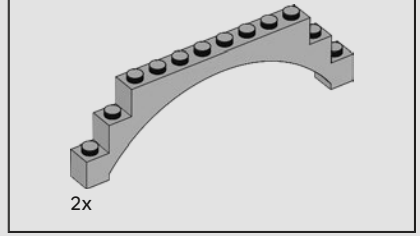


555

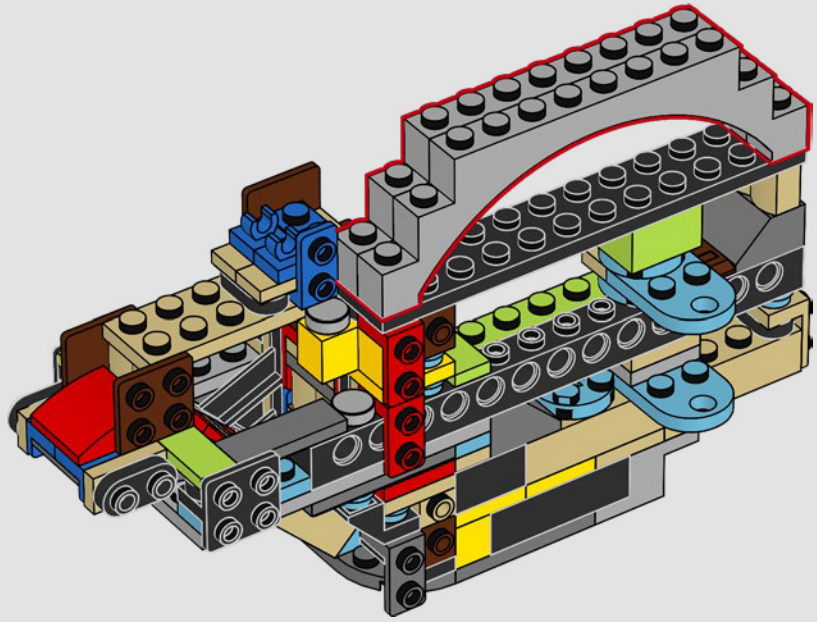

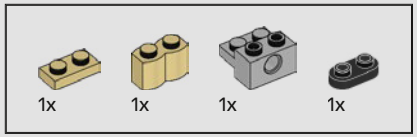


# 556

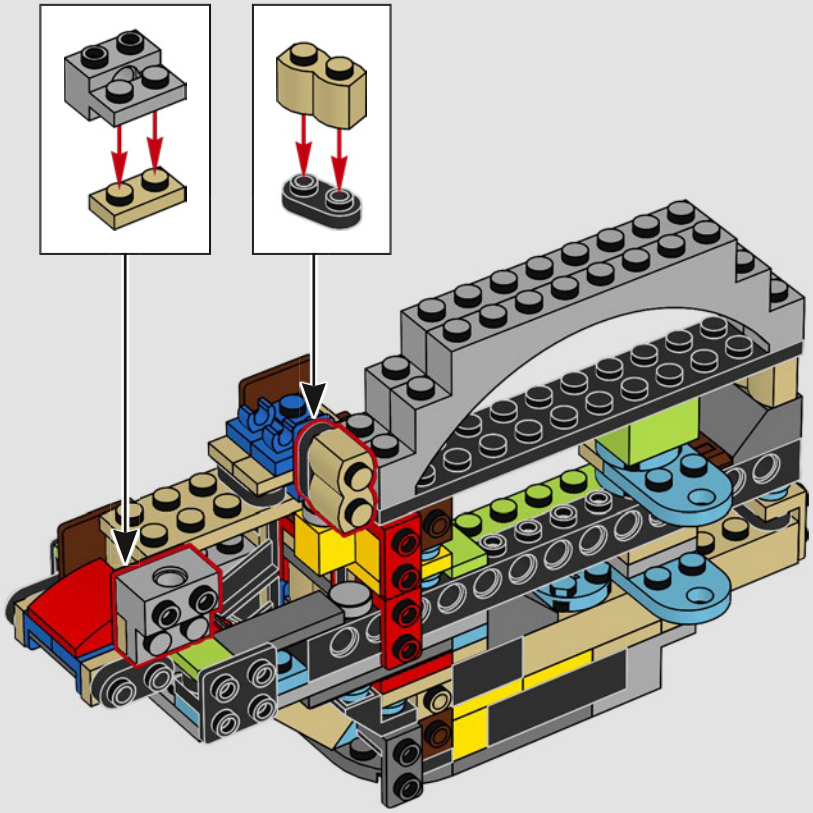

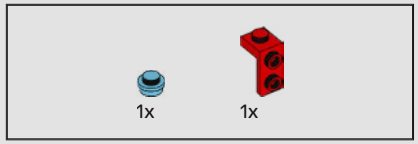


# 557

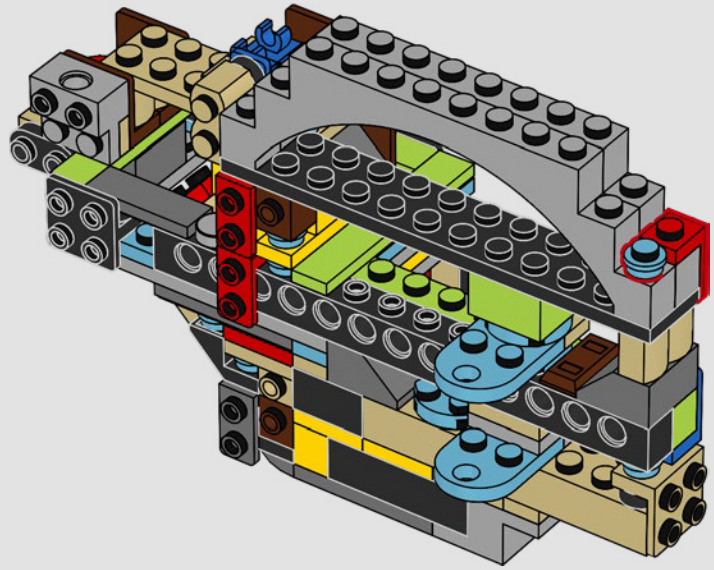

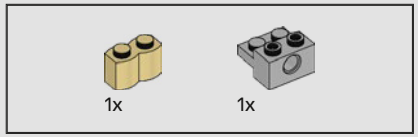


558

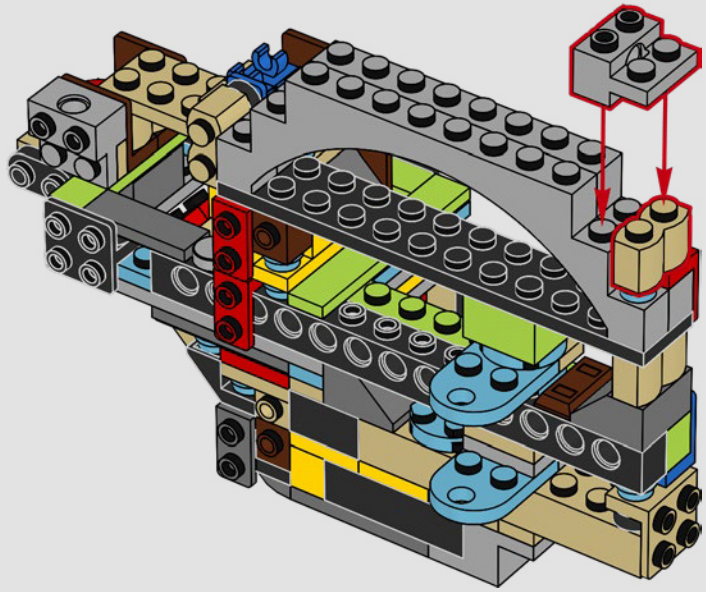

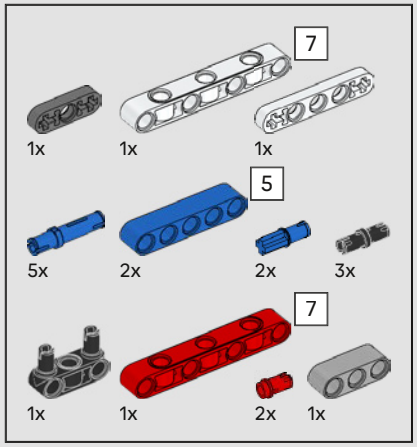


559

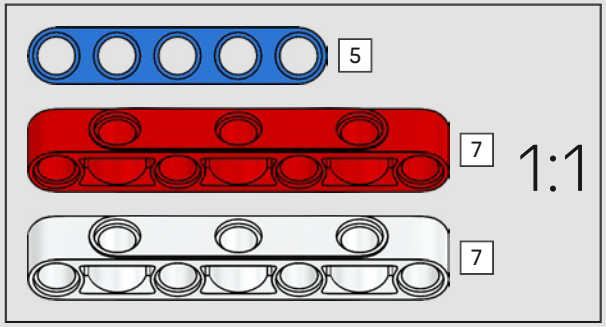


1

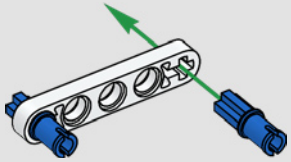

2

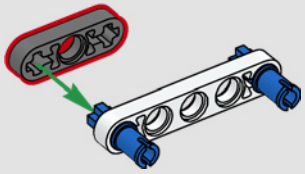

3

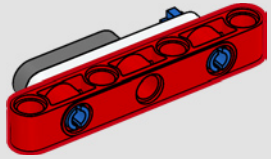

4

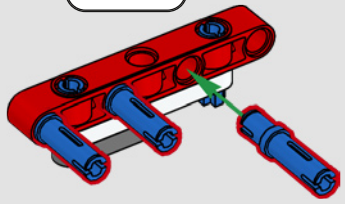

5

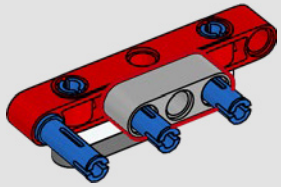

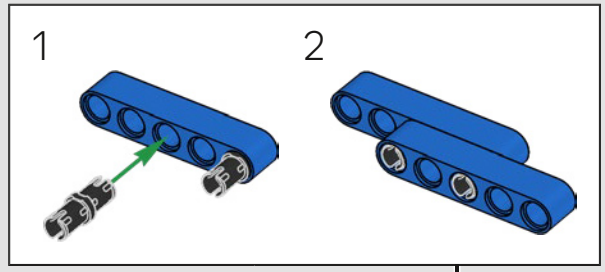


6

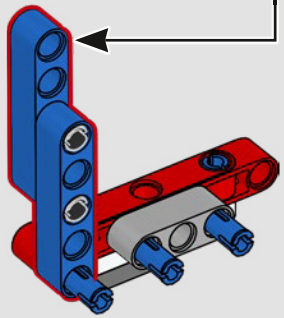

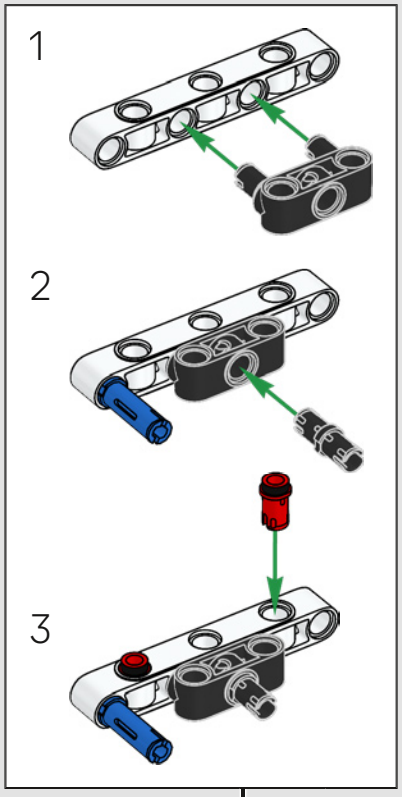
1
2
3

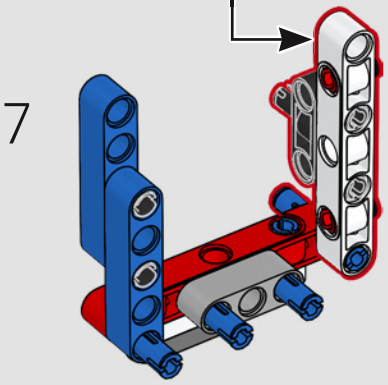
7

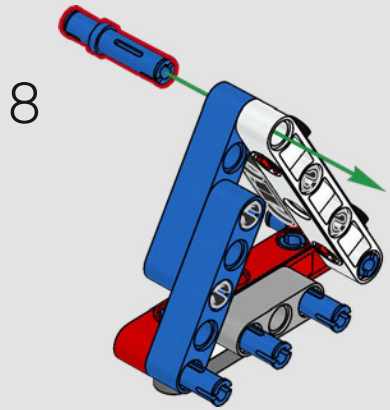
8



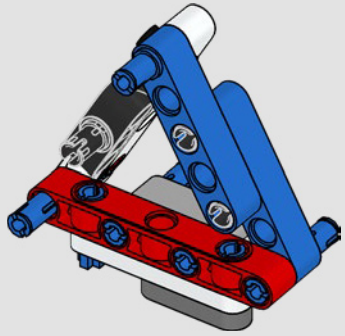
9

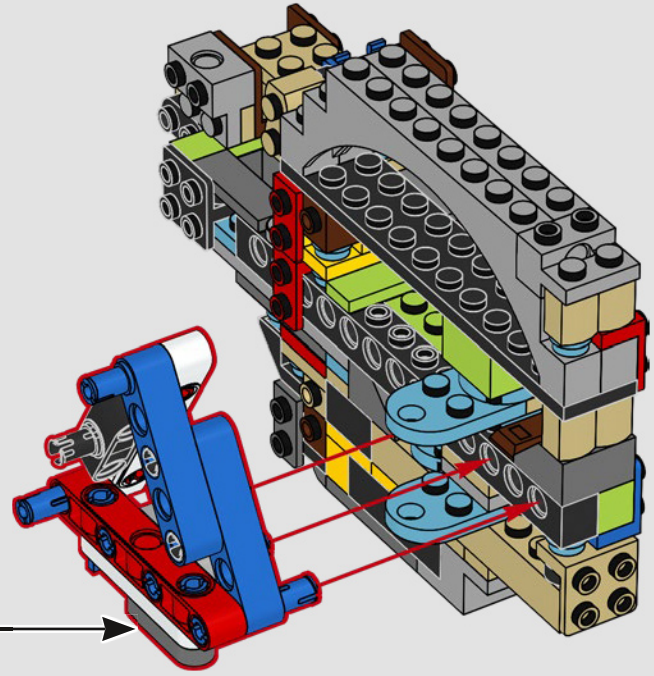

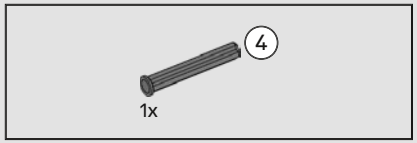


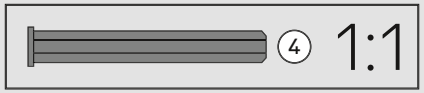


# 560

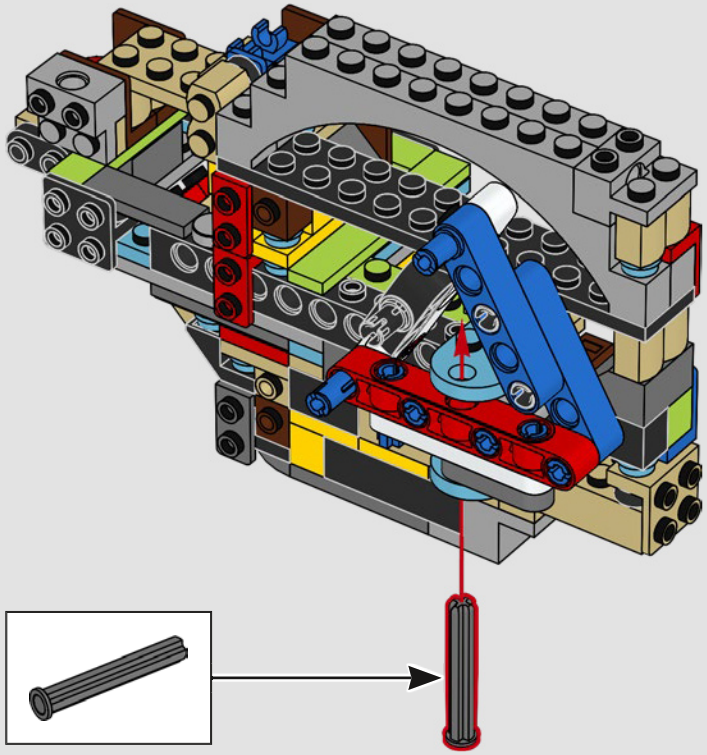

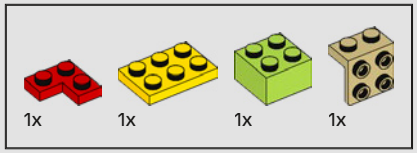


# 561



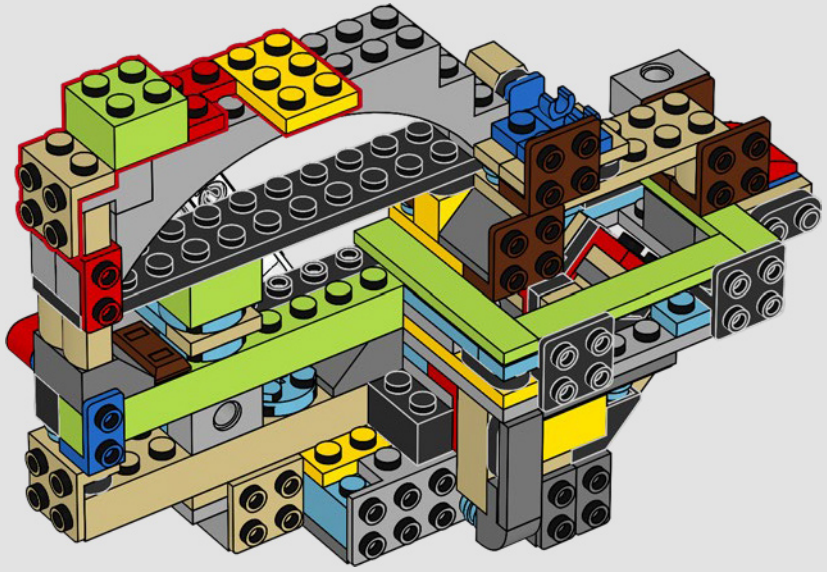




562

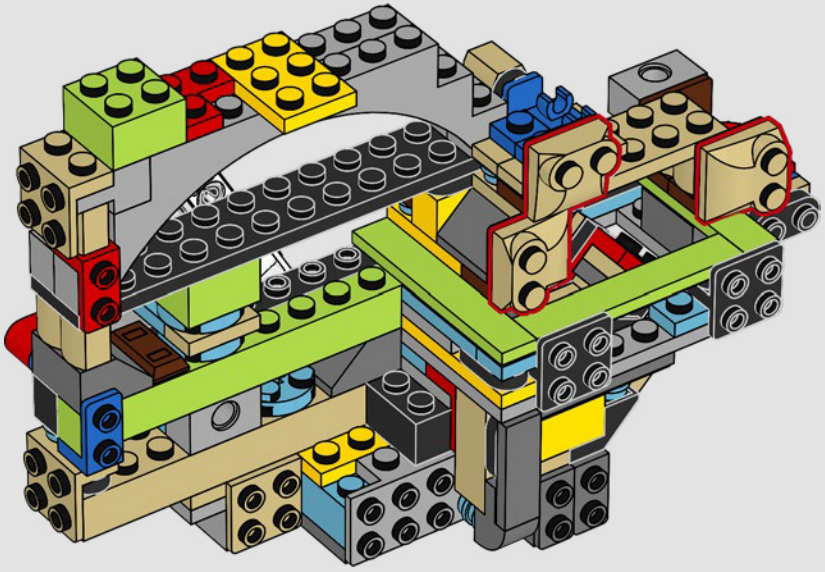




563

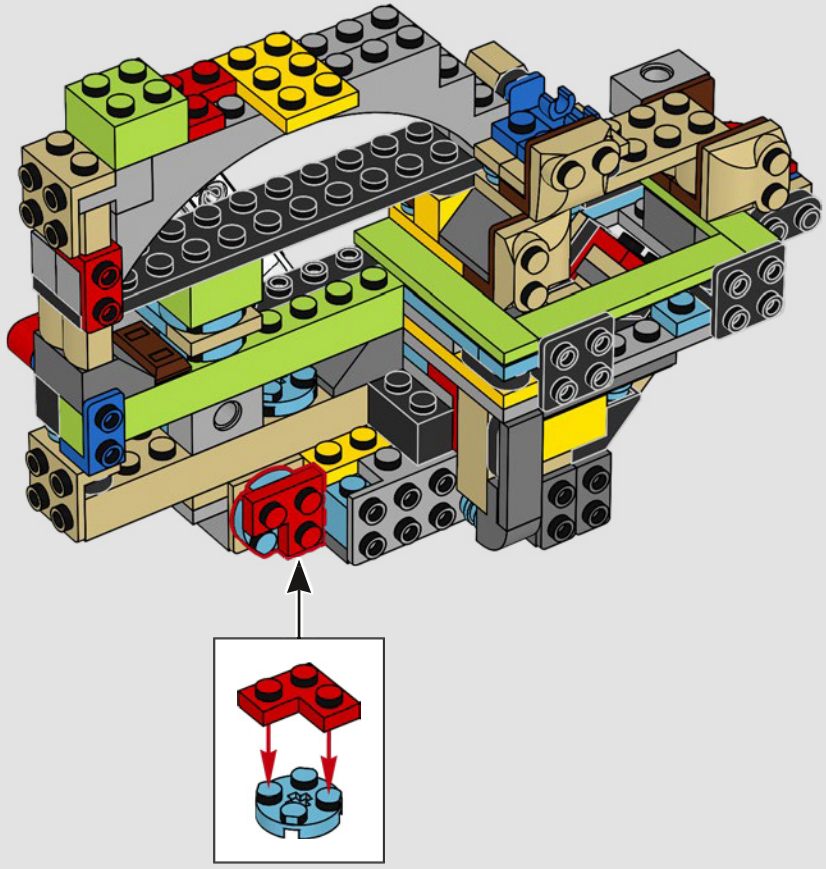




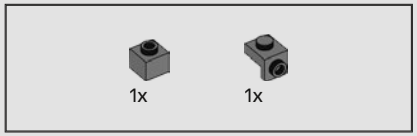


564

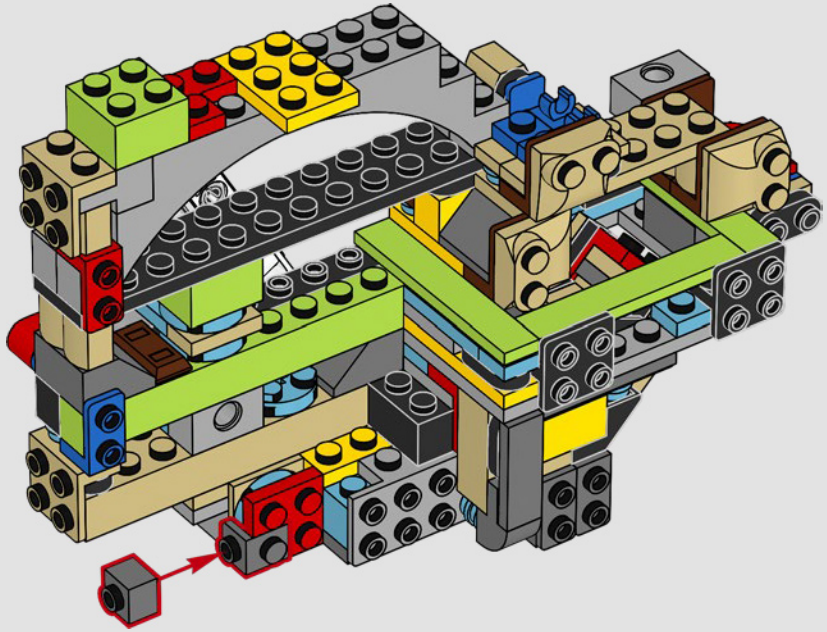

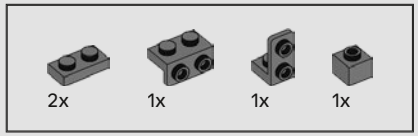


565

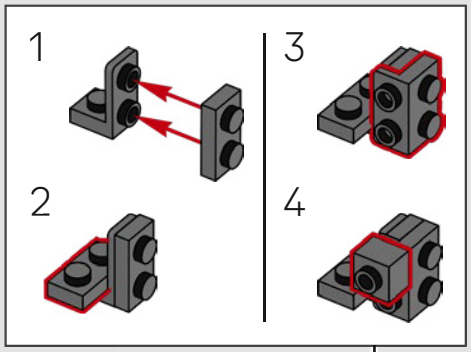


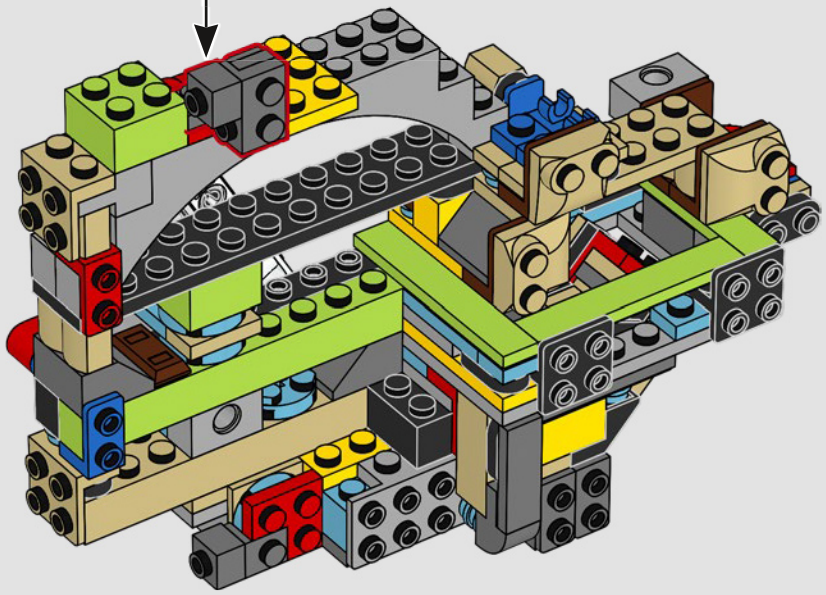

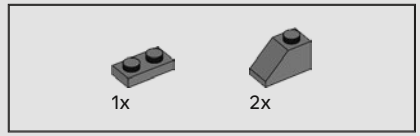


566

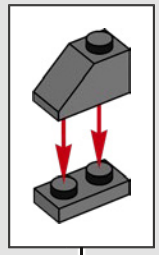

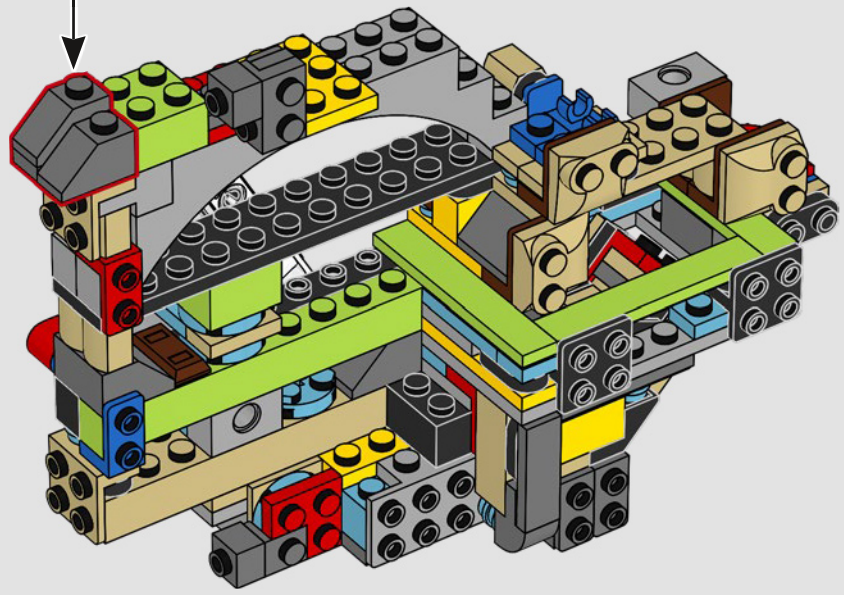

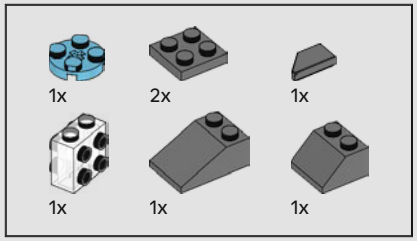


567

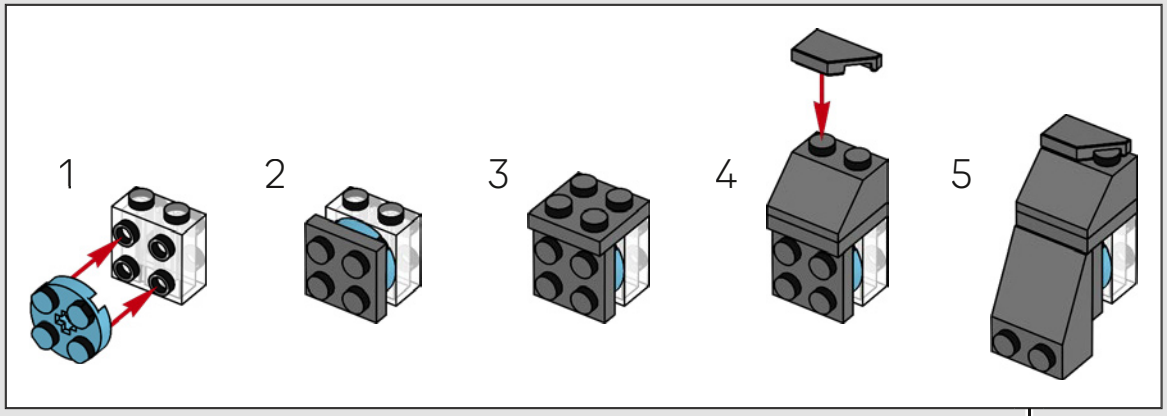




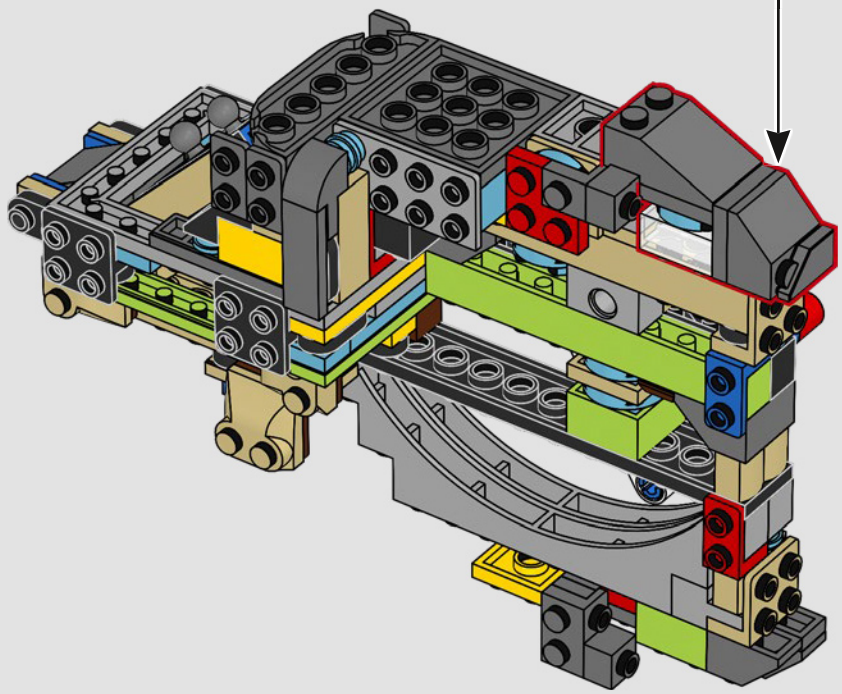

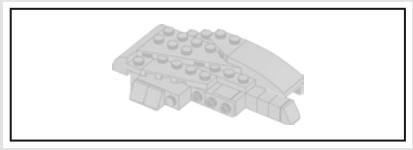

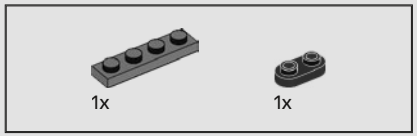


568

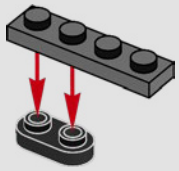

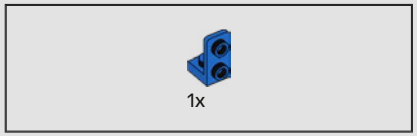


569

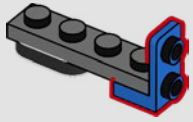

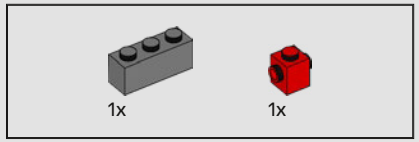


570

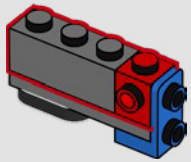

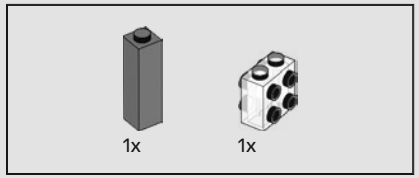


571

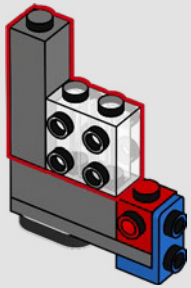

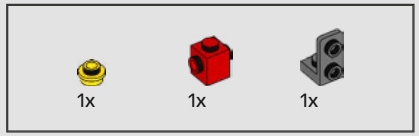


572

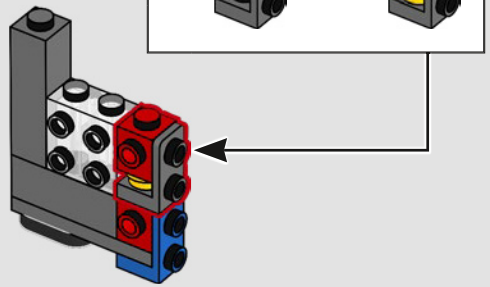


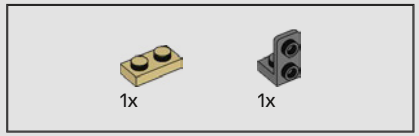


573

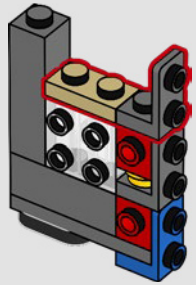

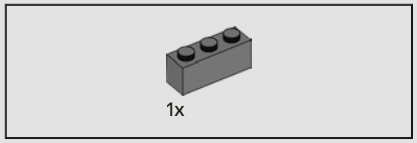


574

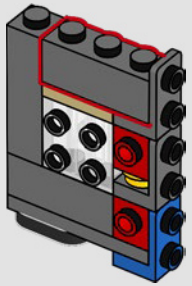

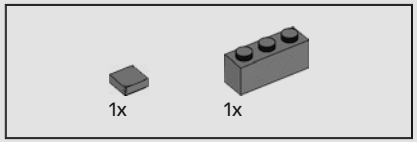


575

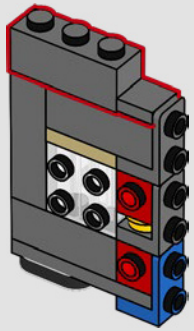

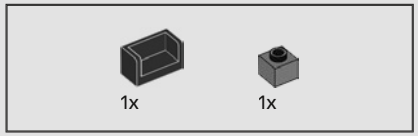


576

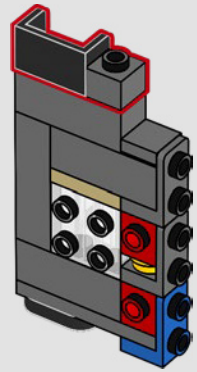

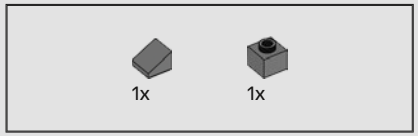


577

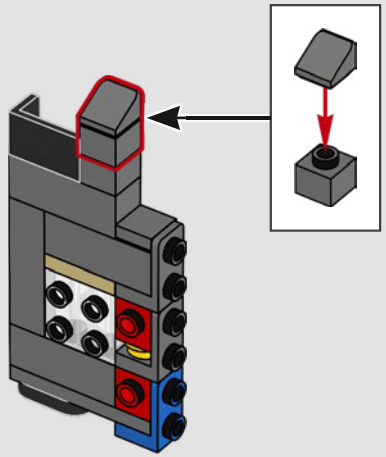

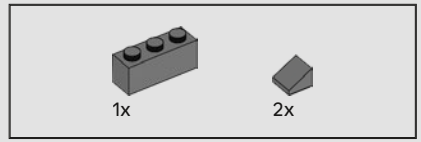


578

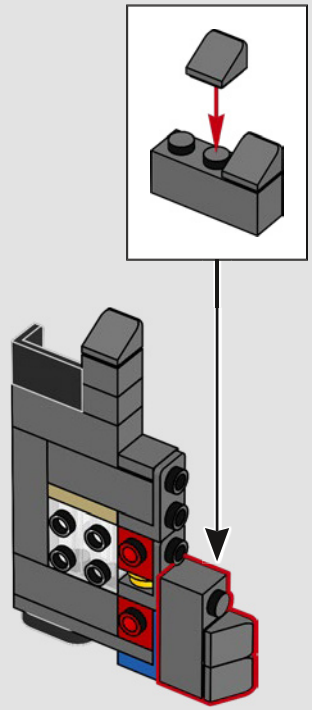

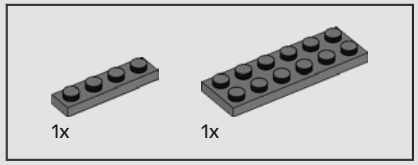


579

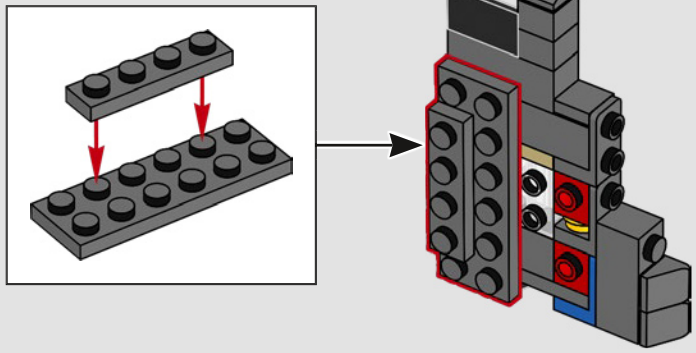

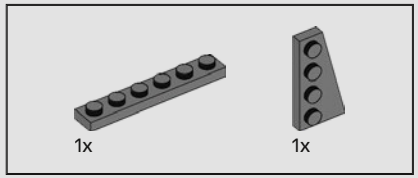


580

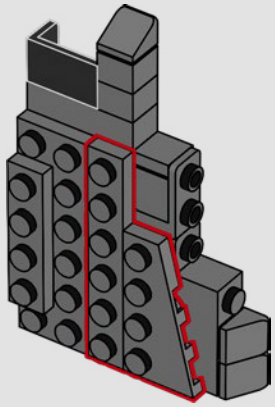

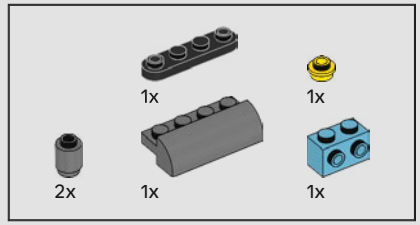


581

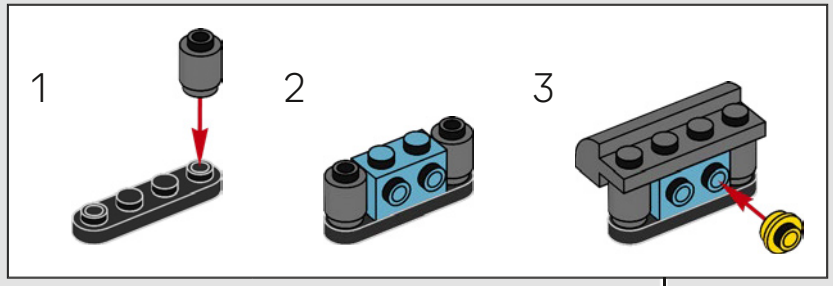


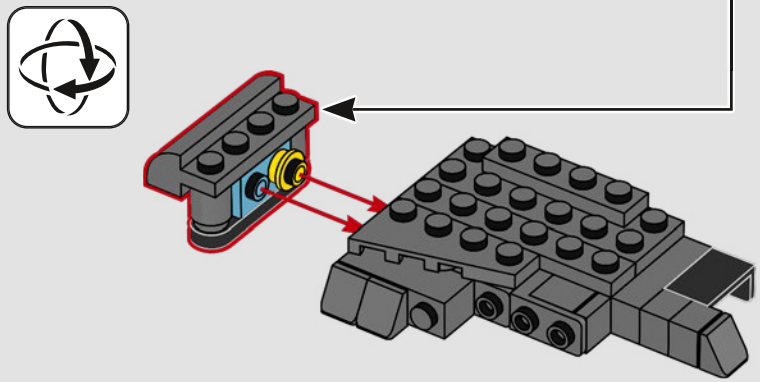

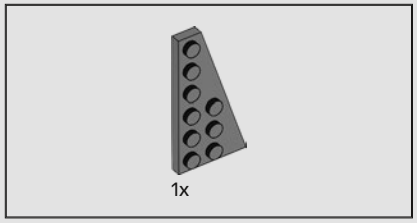


582

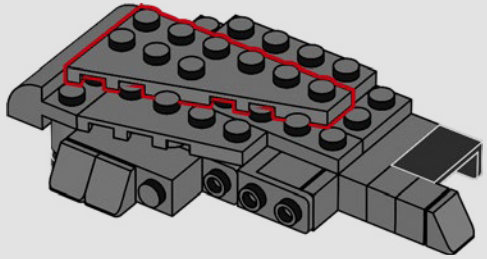

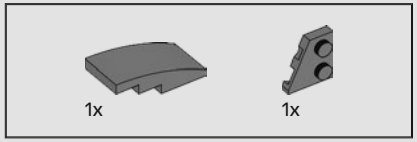


583

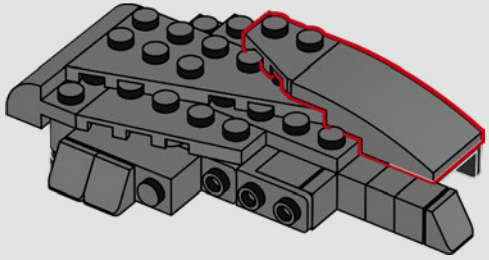

584

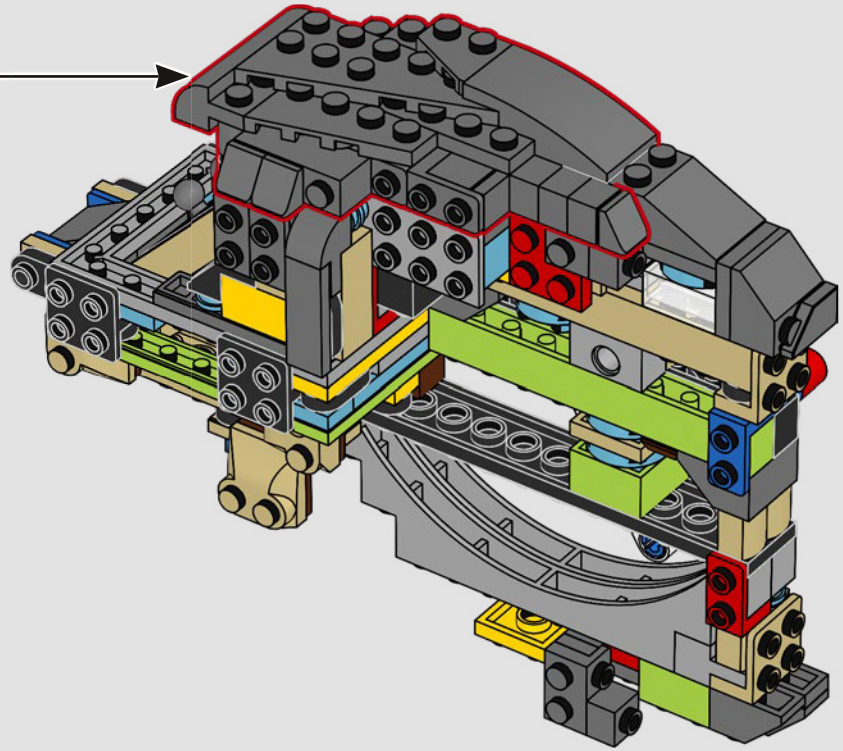

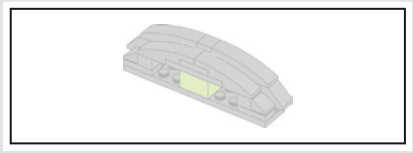

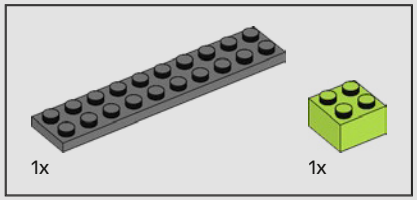


585

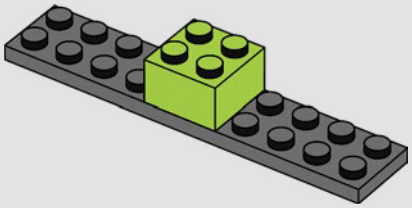

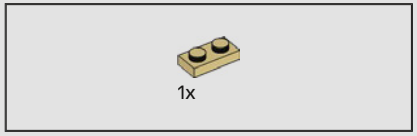


586

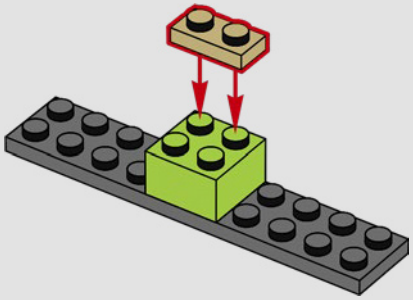

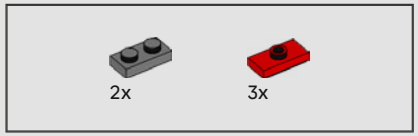


587

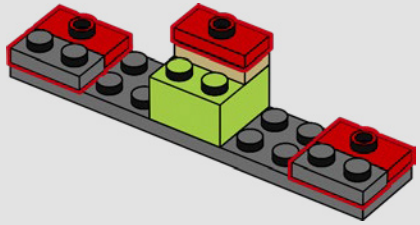

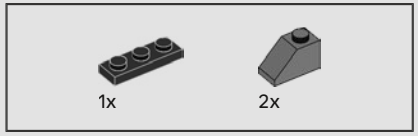


588

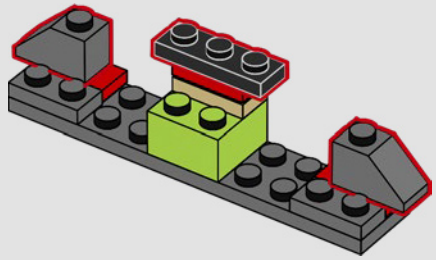

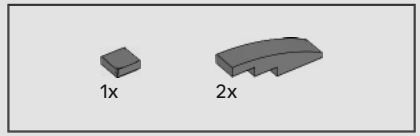


589

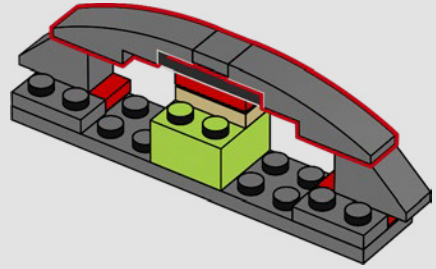

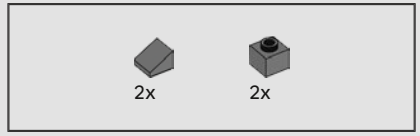


590

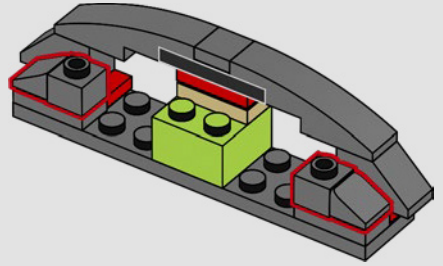

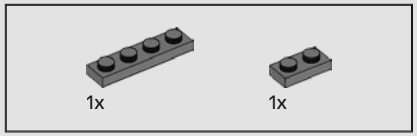


591

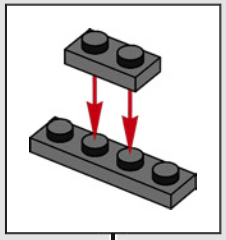

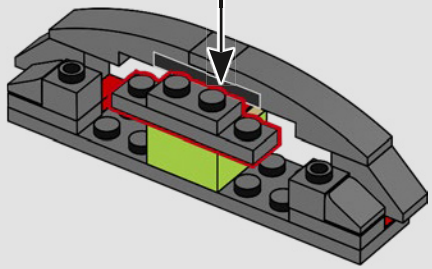

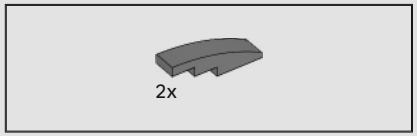


592

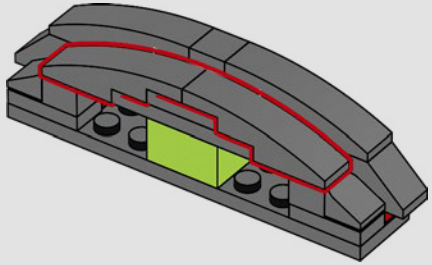

593

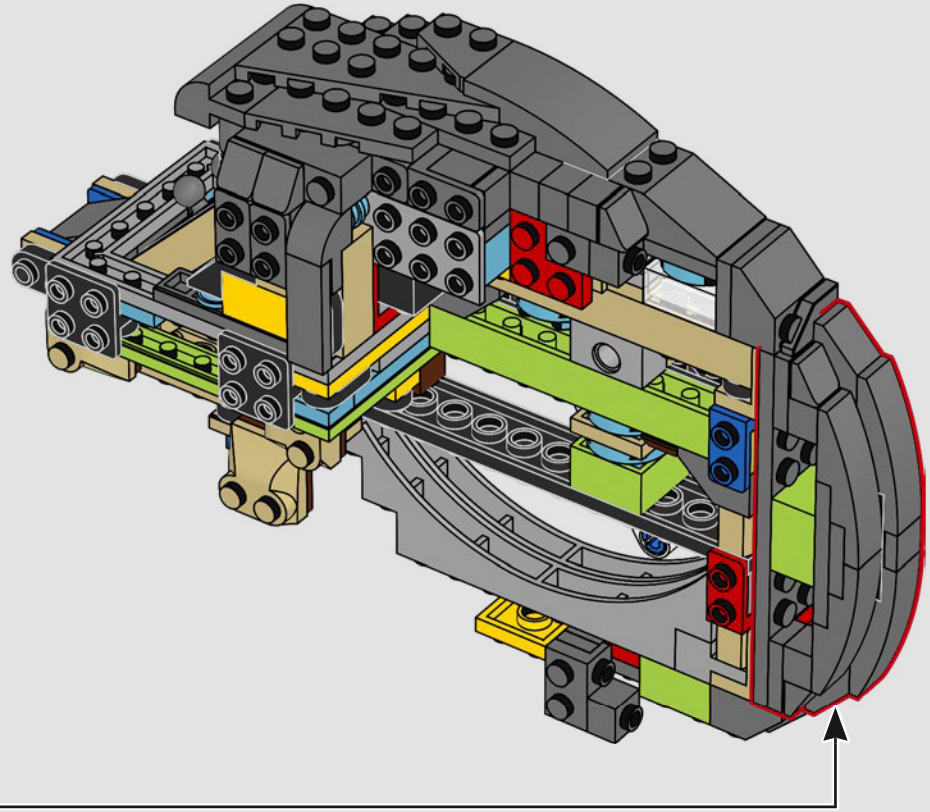

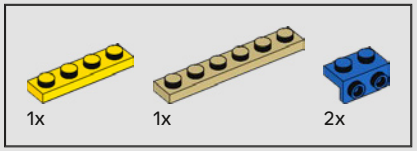


594

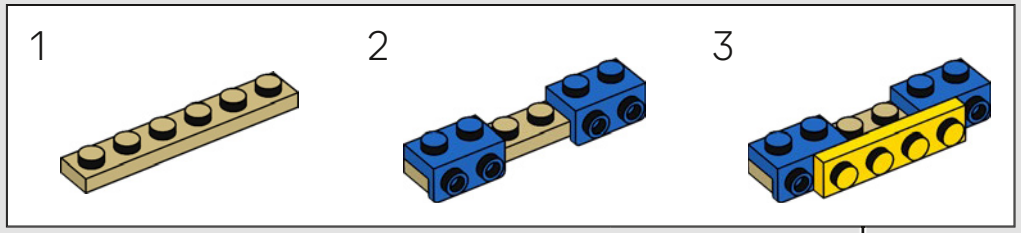


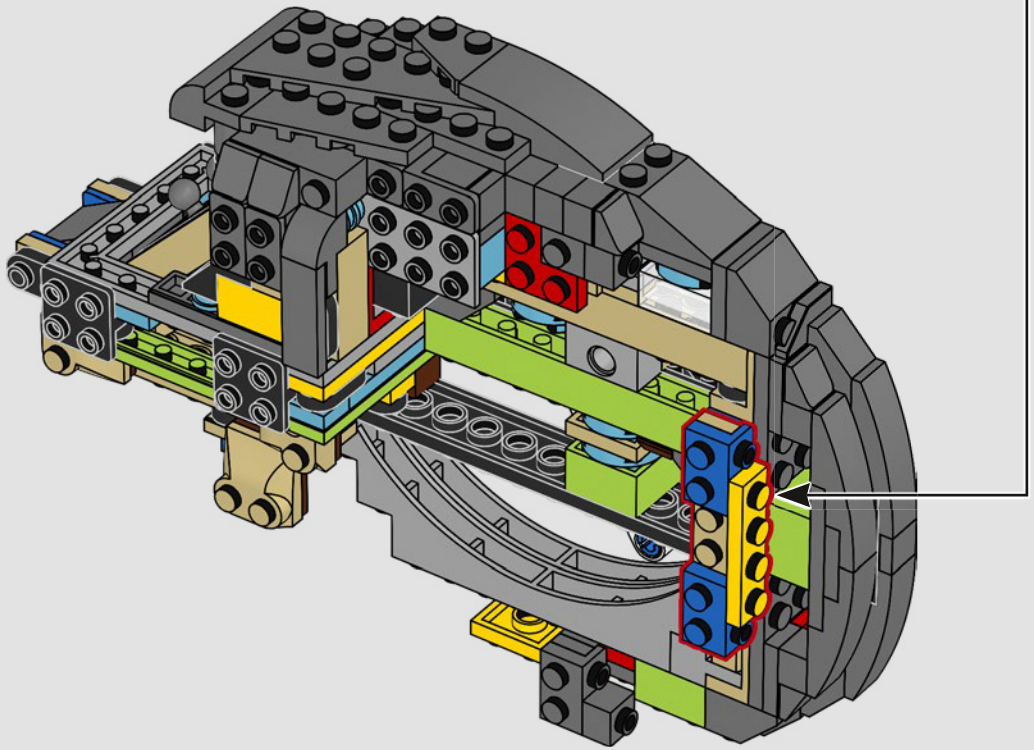

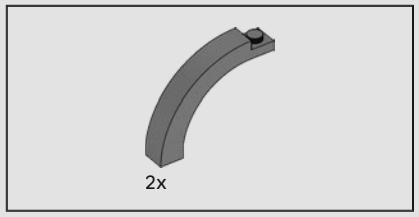


595

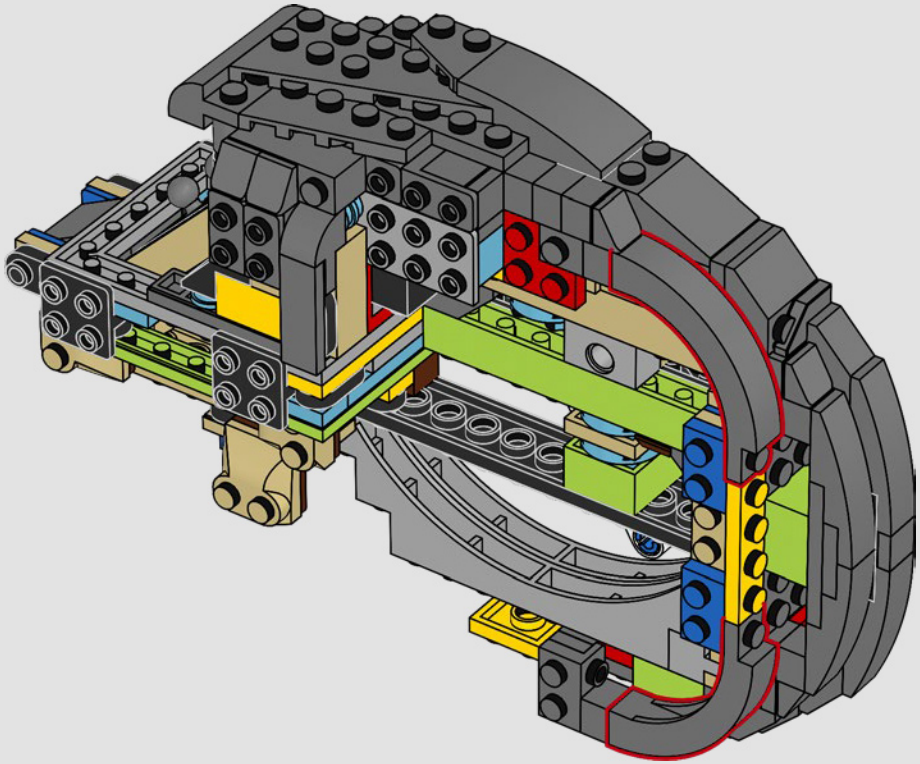

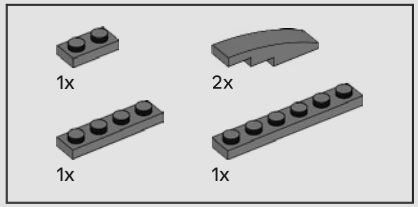


596

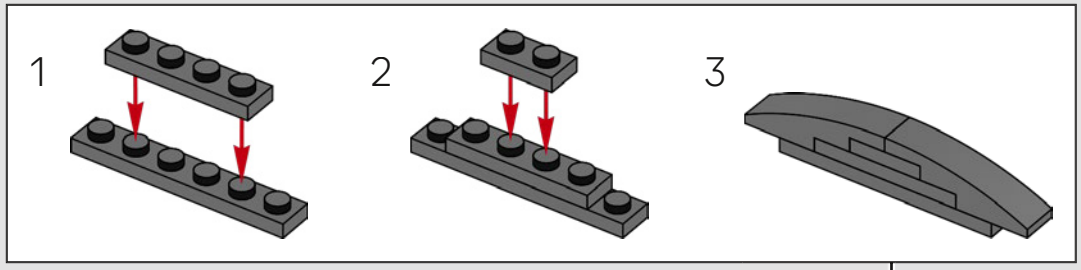


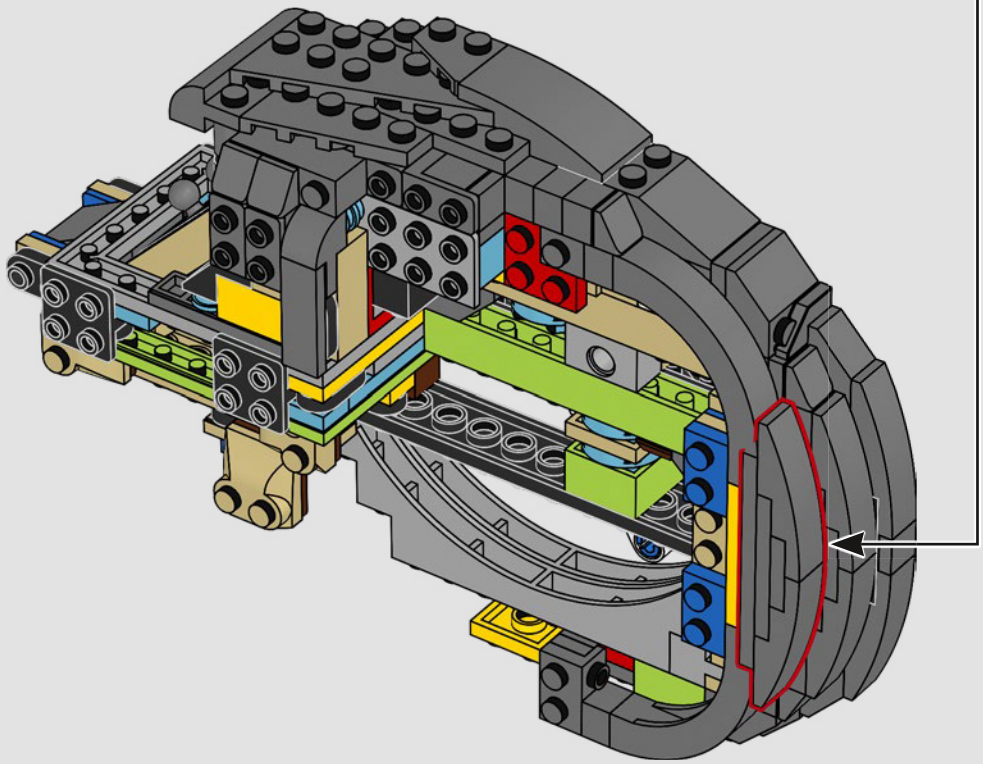

597

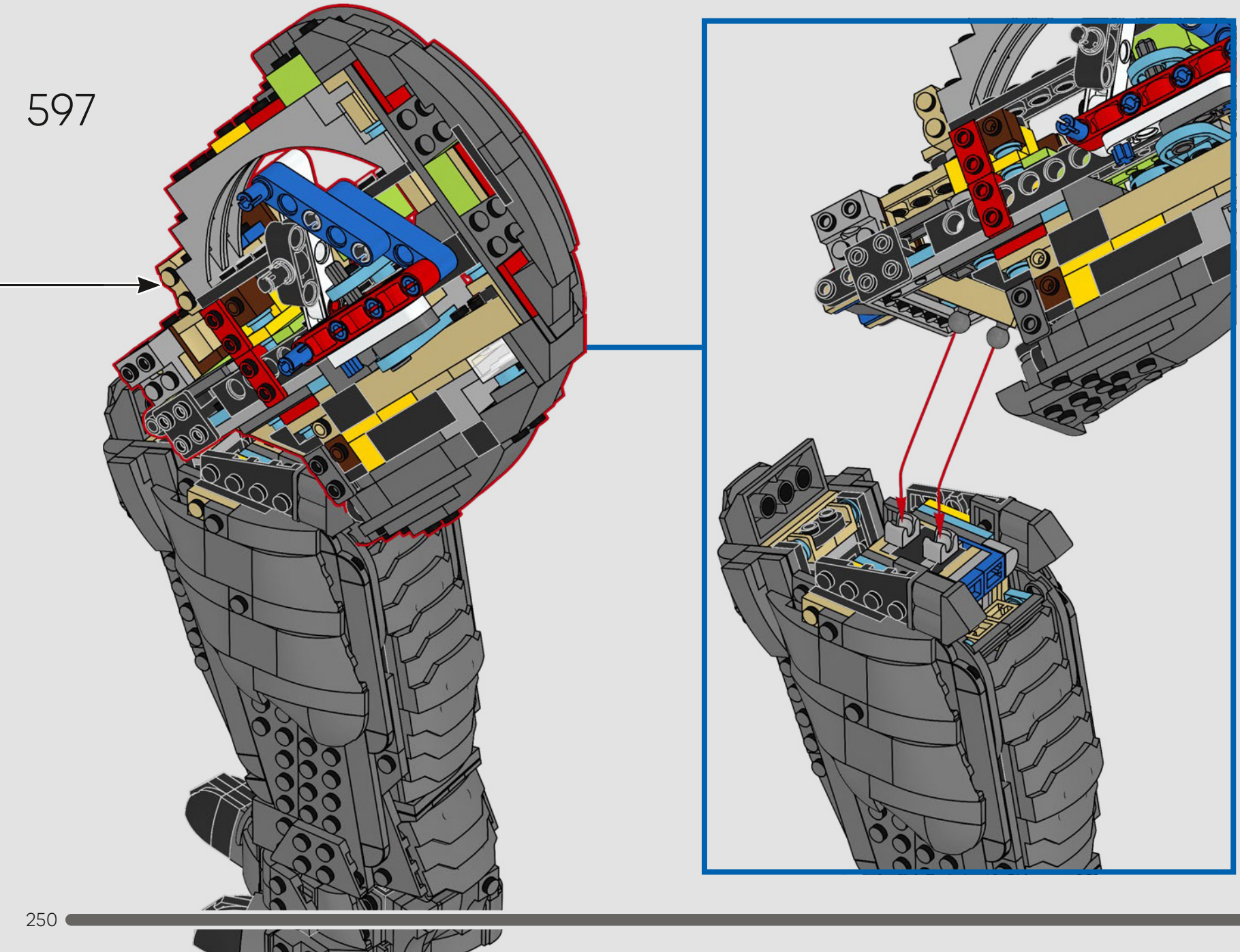




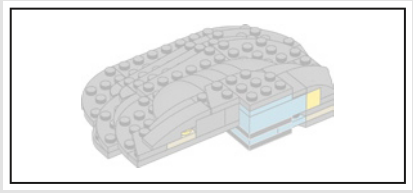

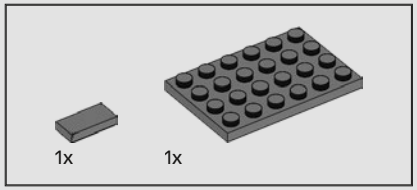


598

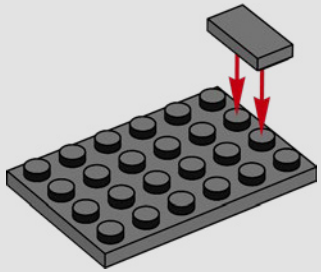

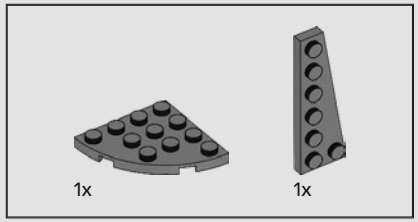


599

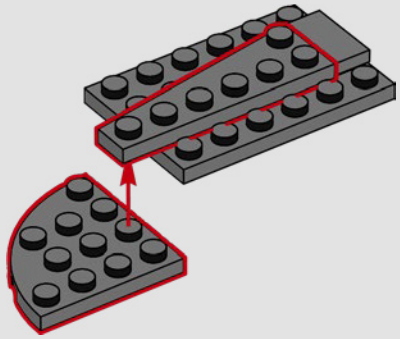

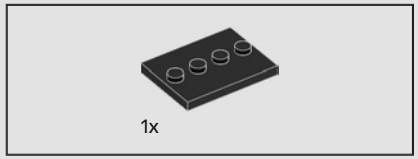


600

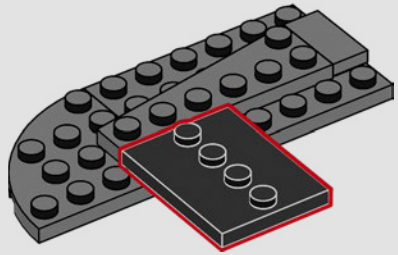

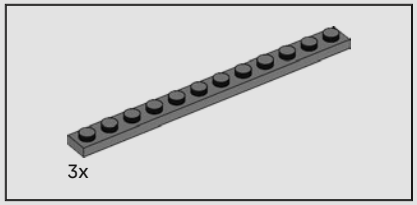


601

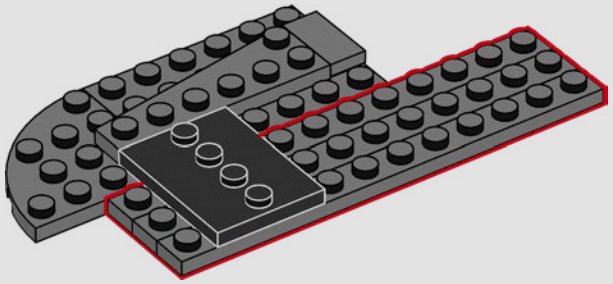

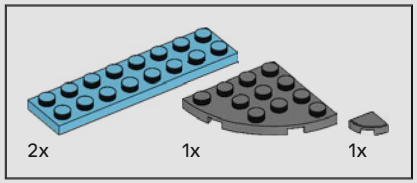


602

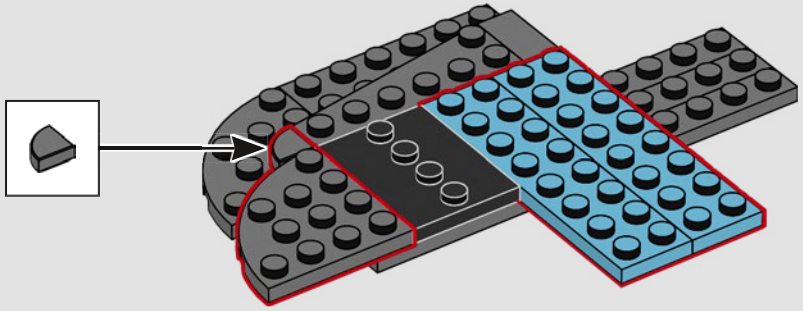

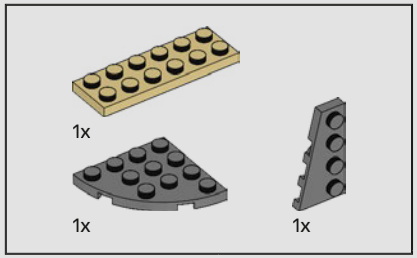


603

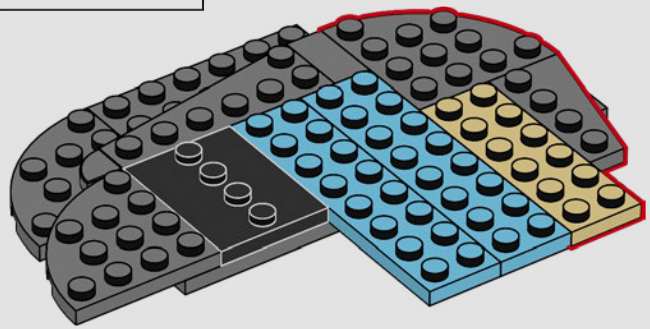

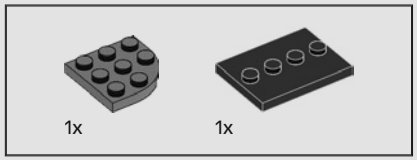


604



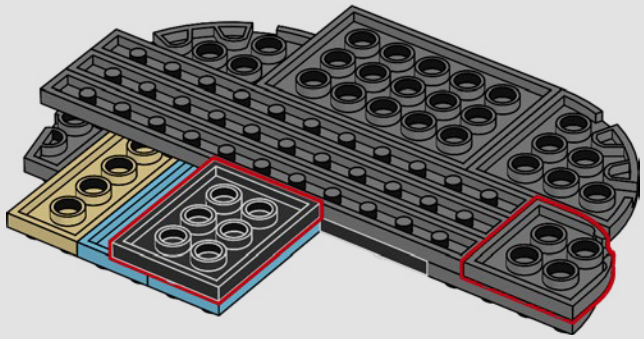

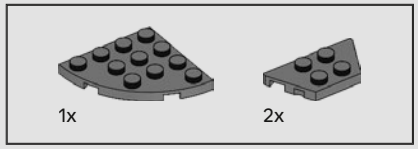


605

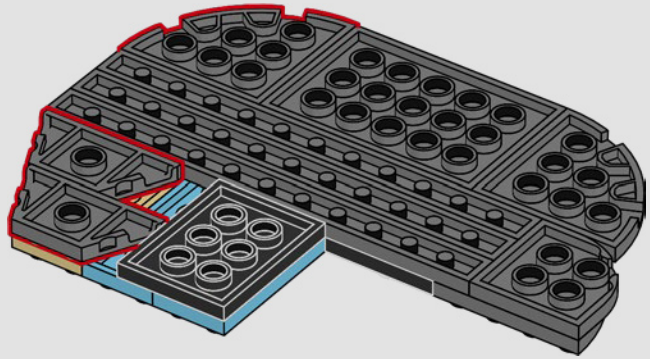

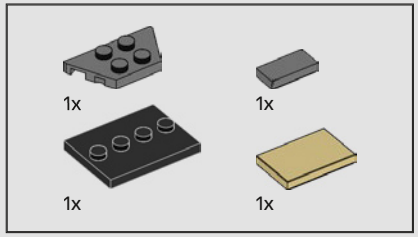


606



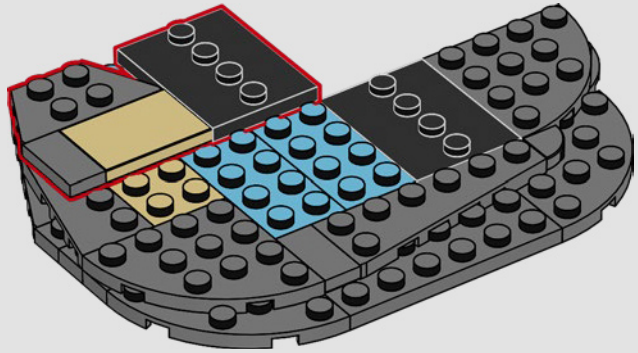

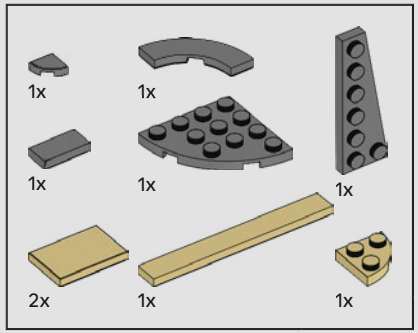


607

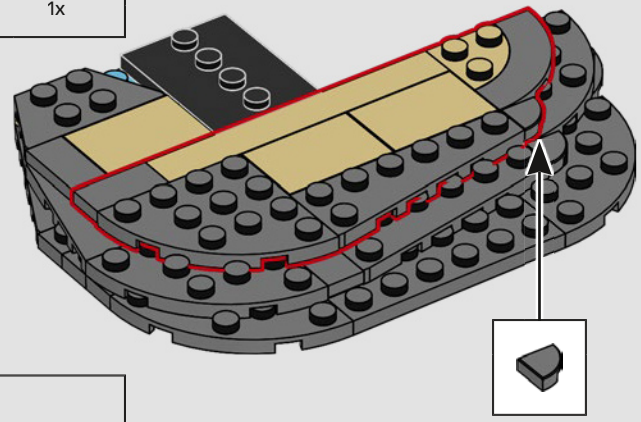

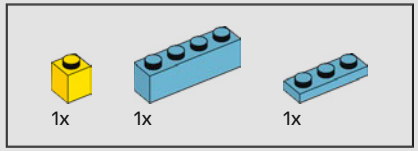


608

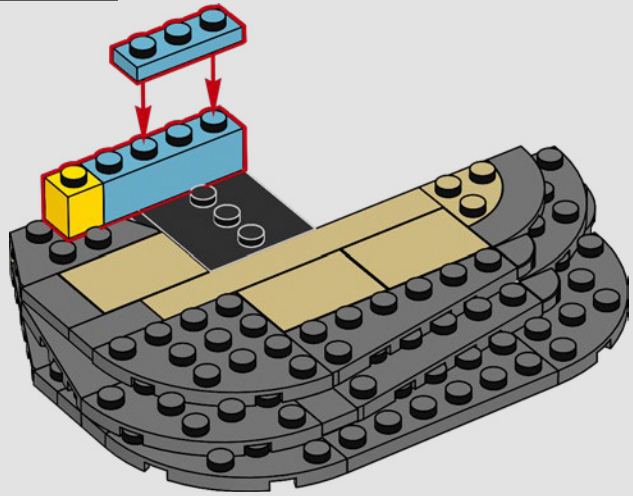

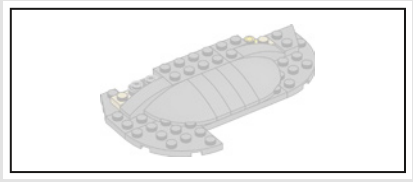

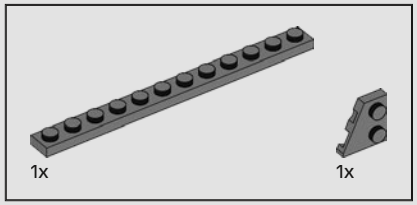


609

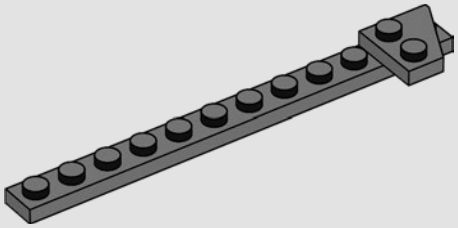

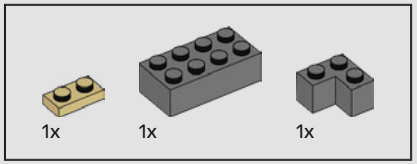


610

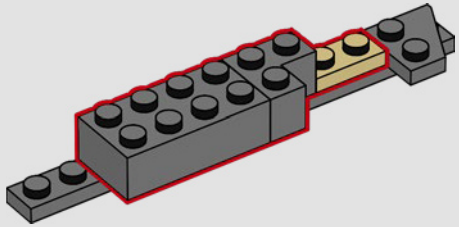

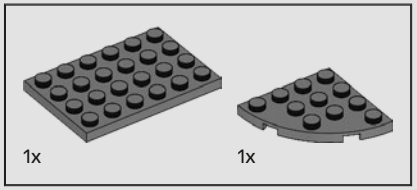


611

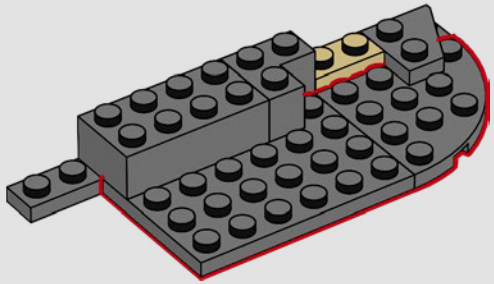

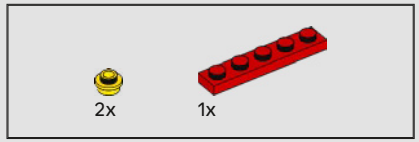


612

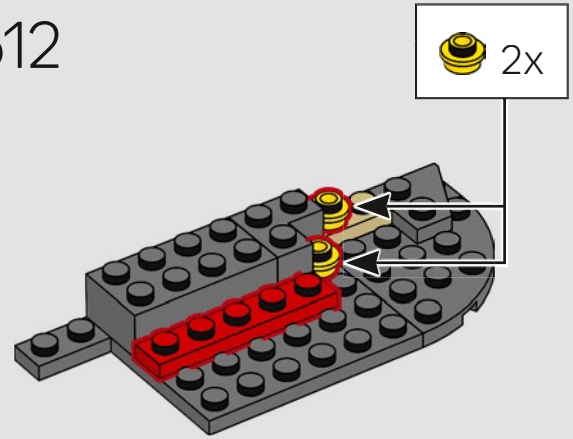


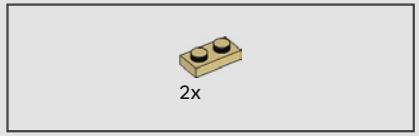


613

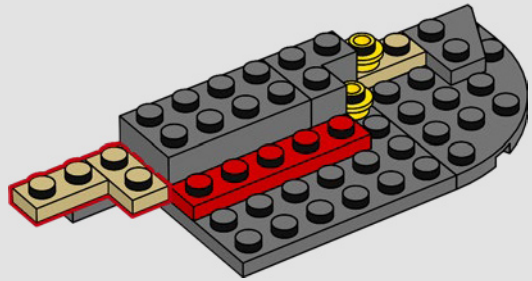




614

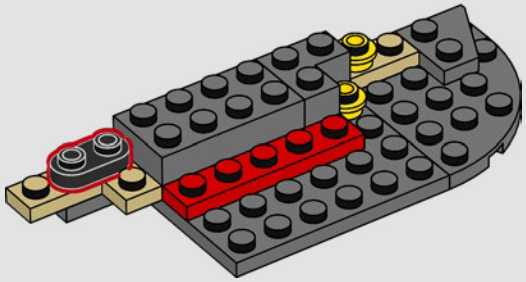

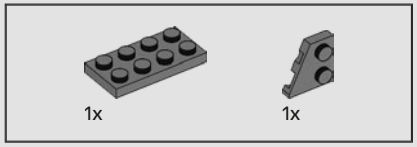


615

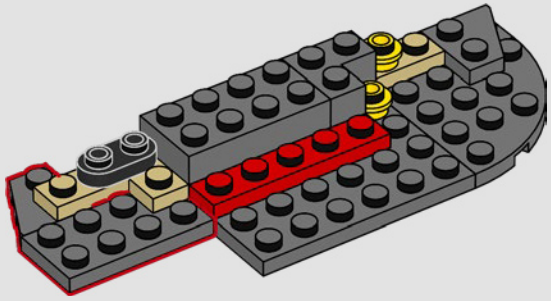

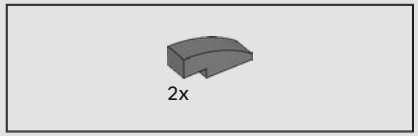


616

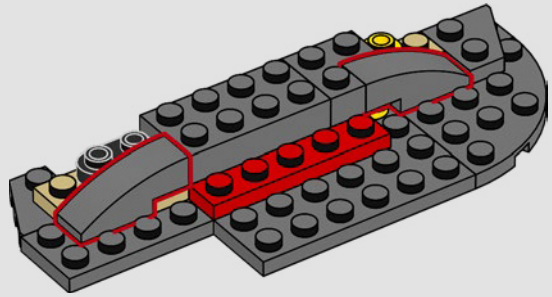

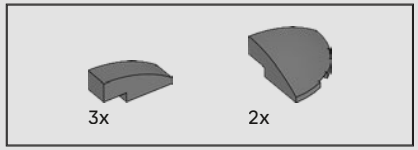


617

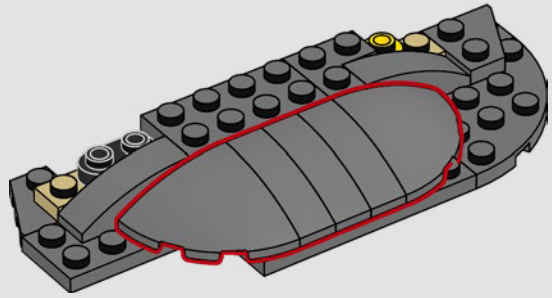

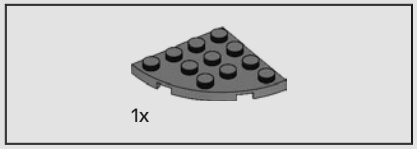


618

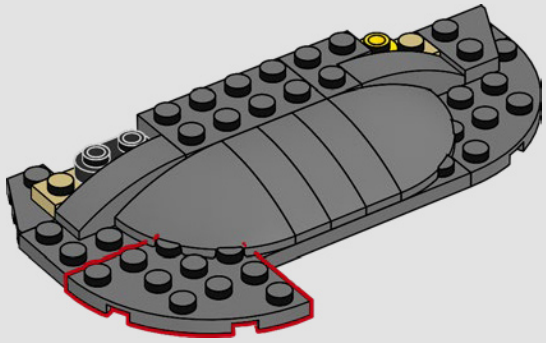

619

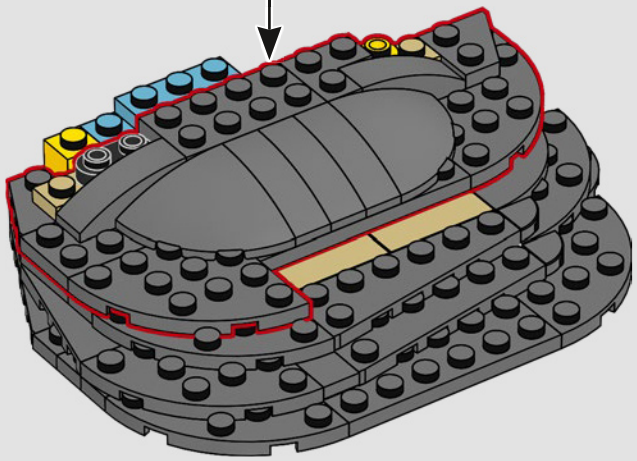

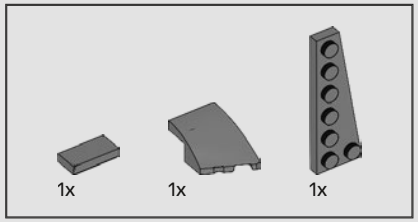


620

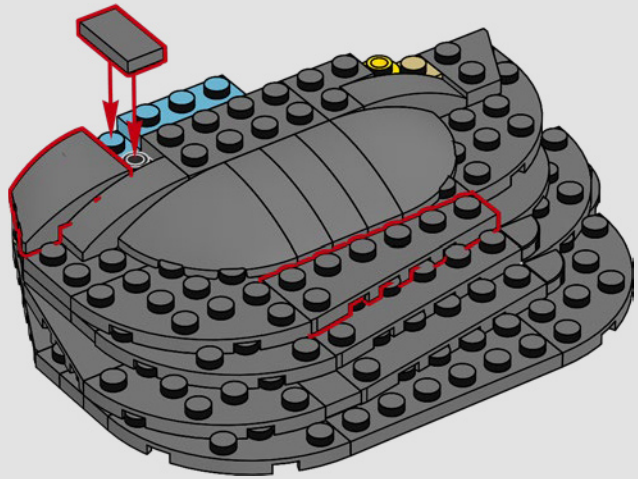

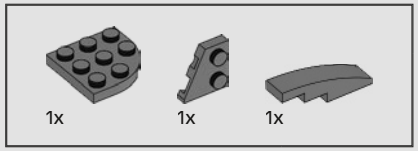


621

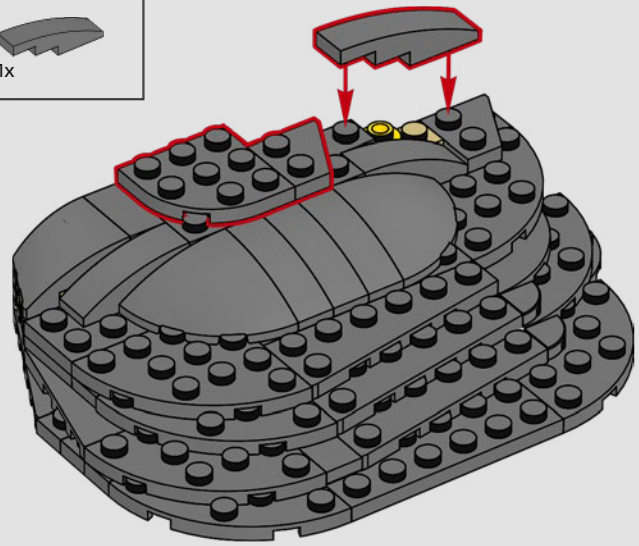

622

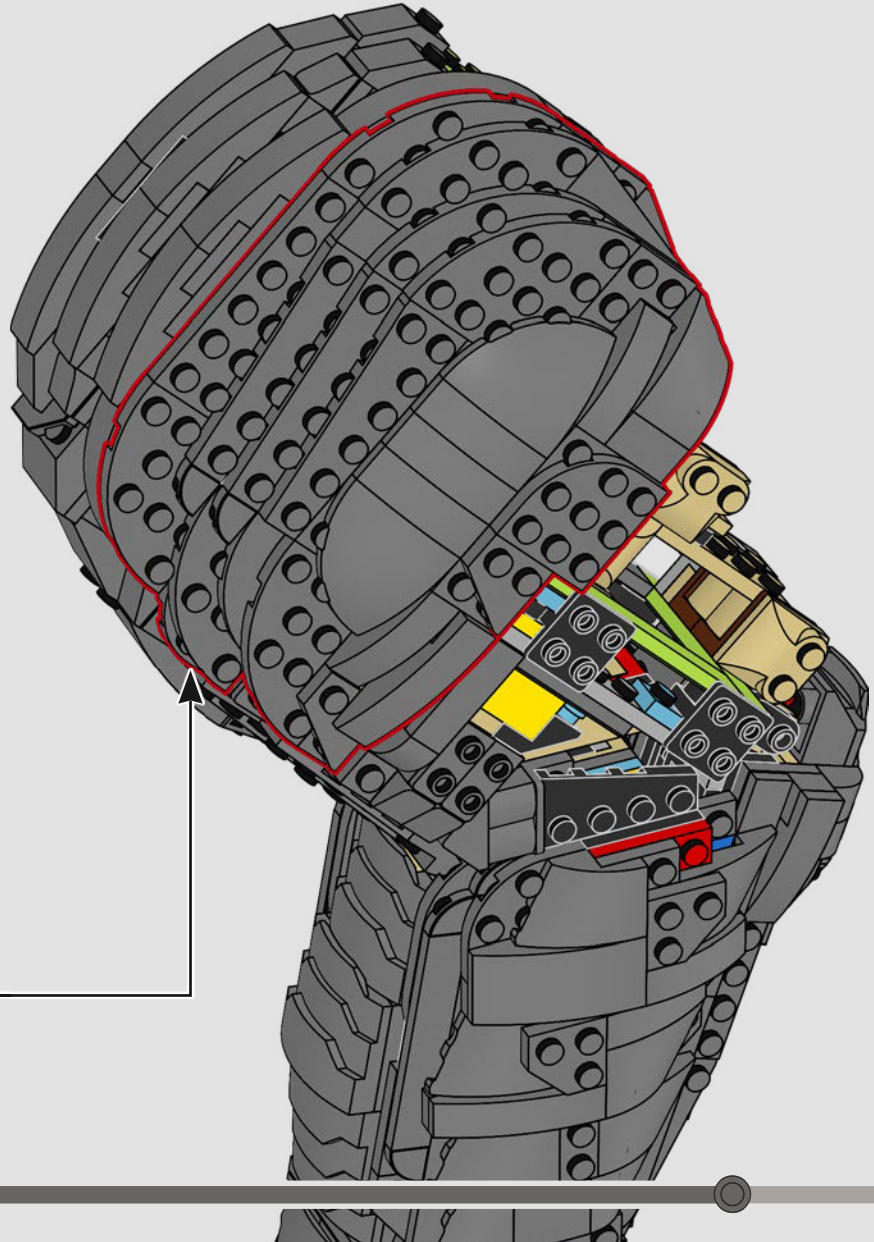




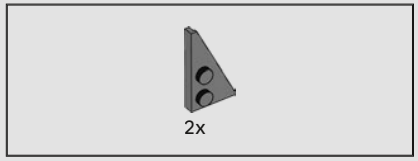


623

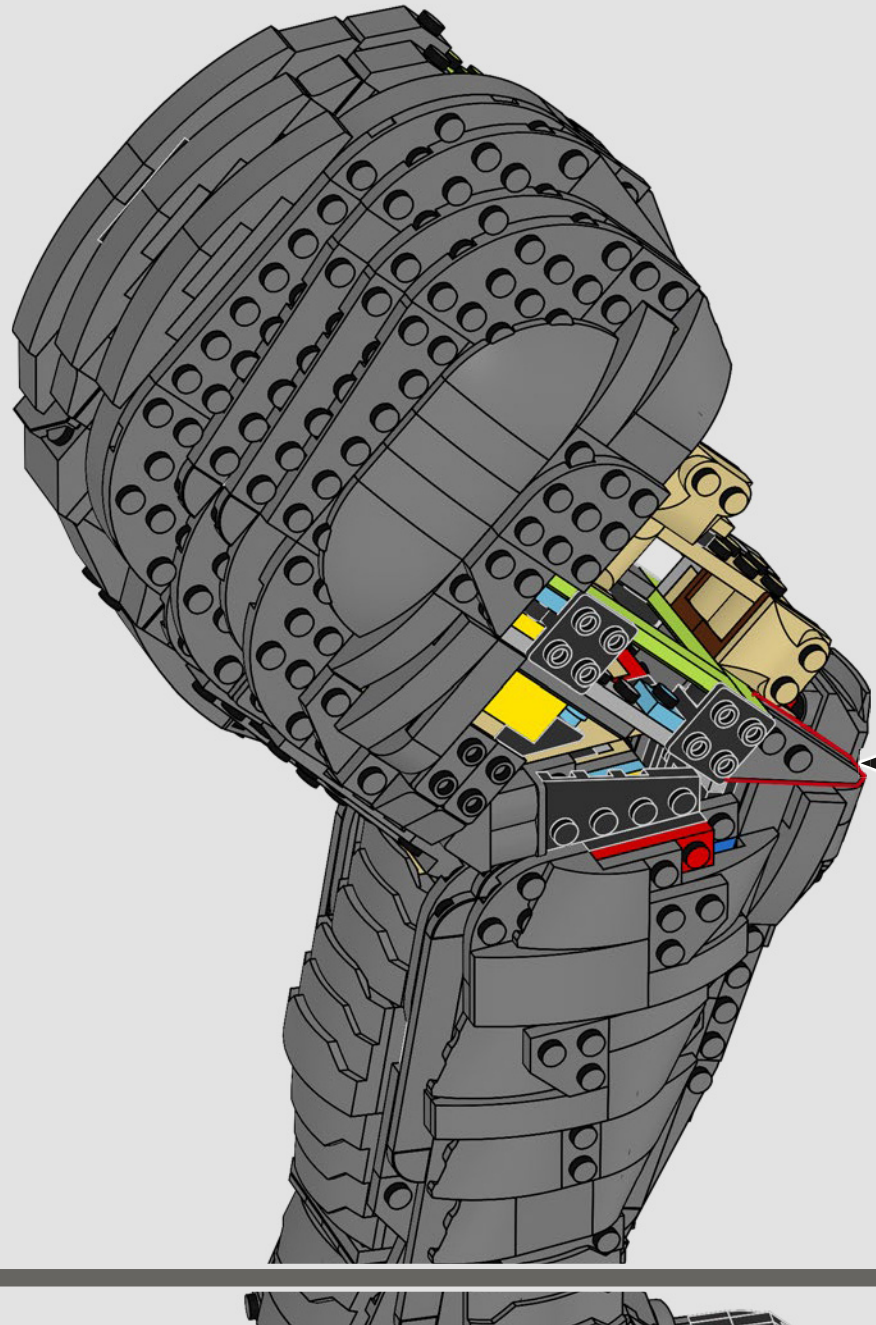

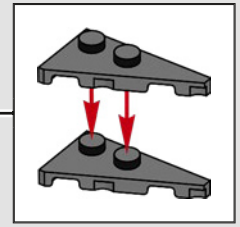

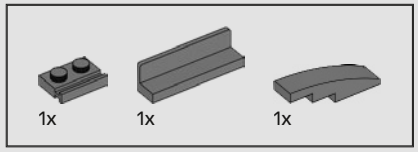


624

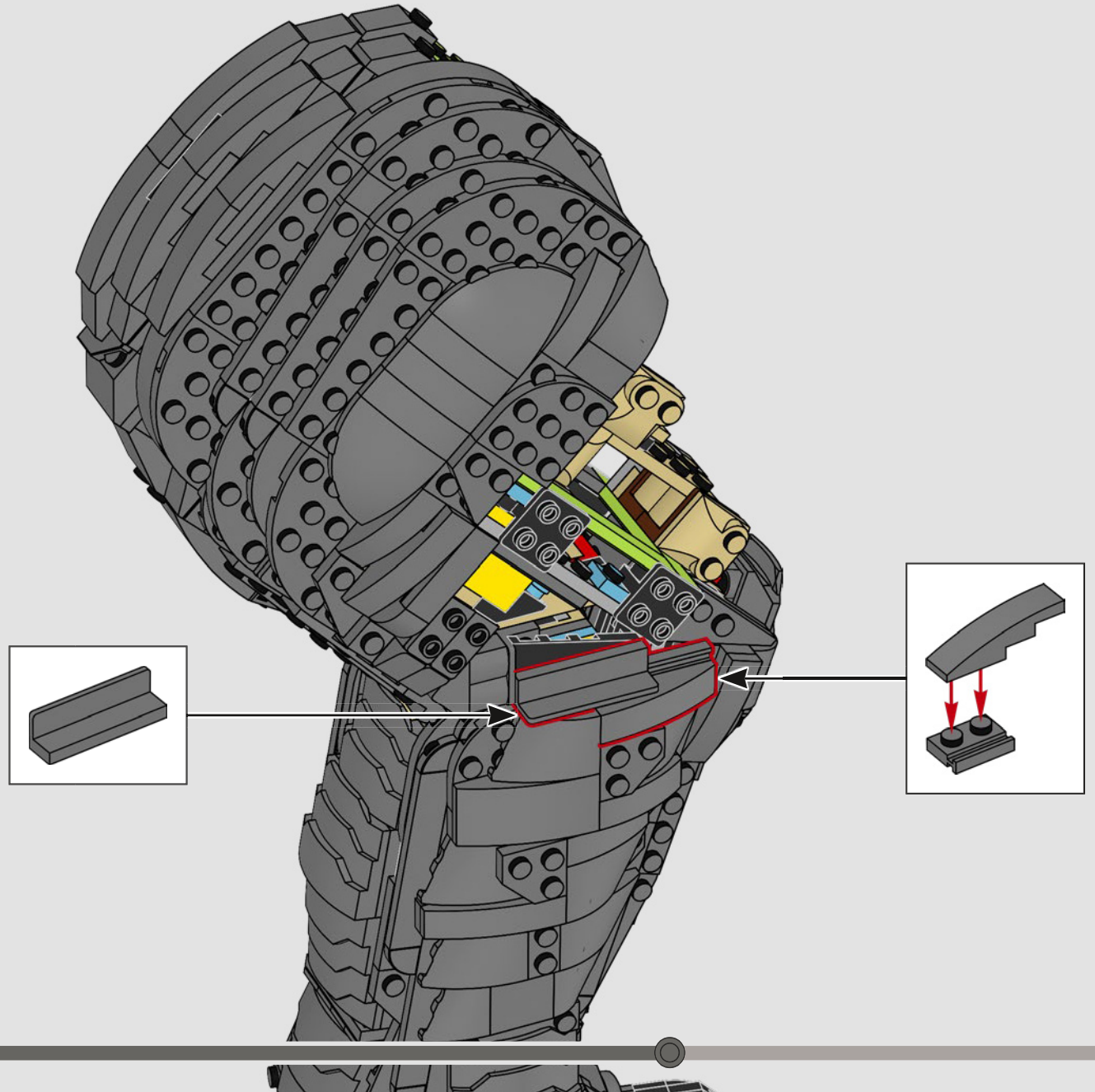

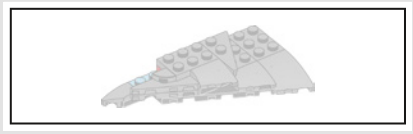

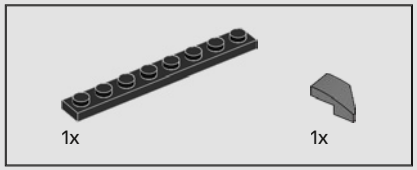


625

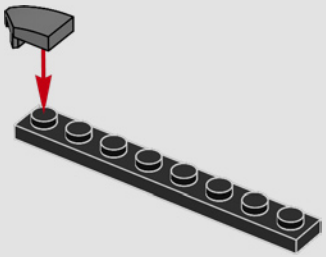

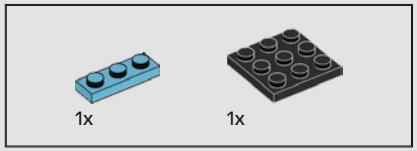


626

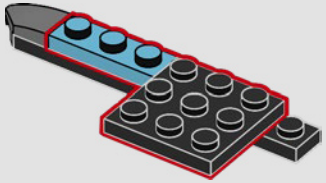

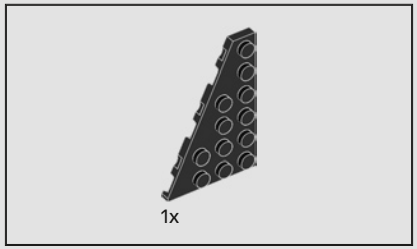


627

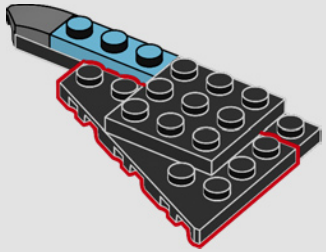

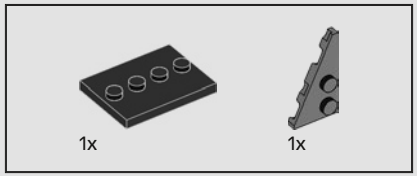


628

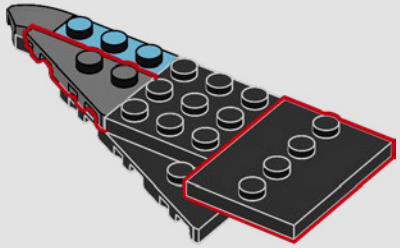

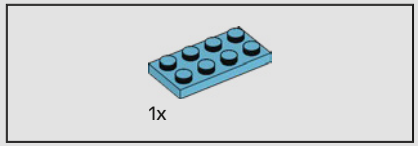


629



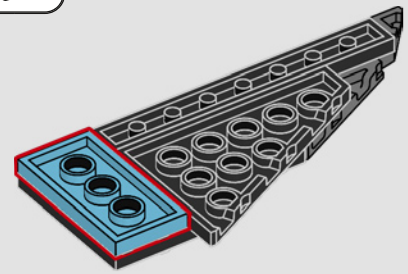

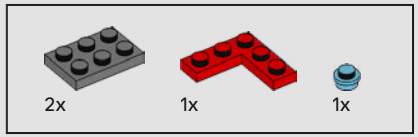


630



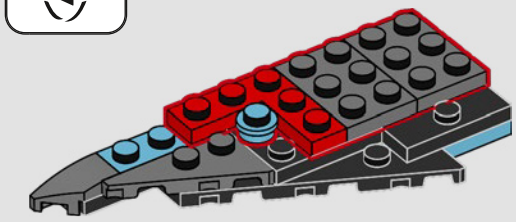

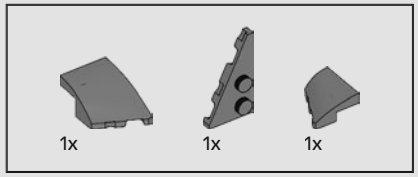


631

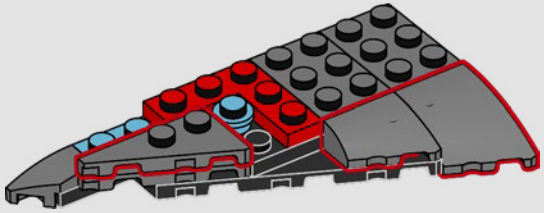

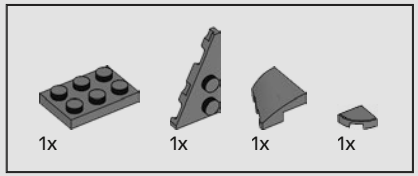


632

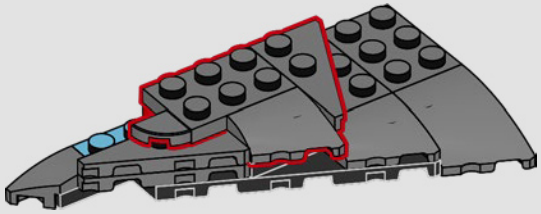

633

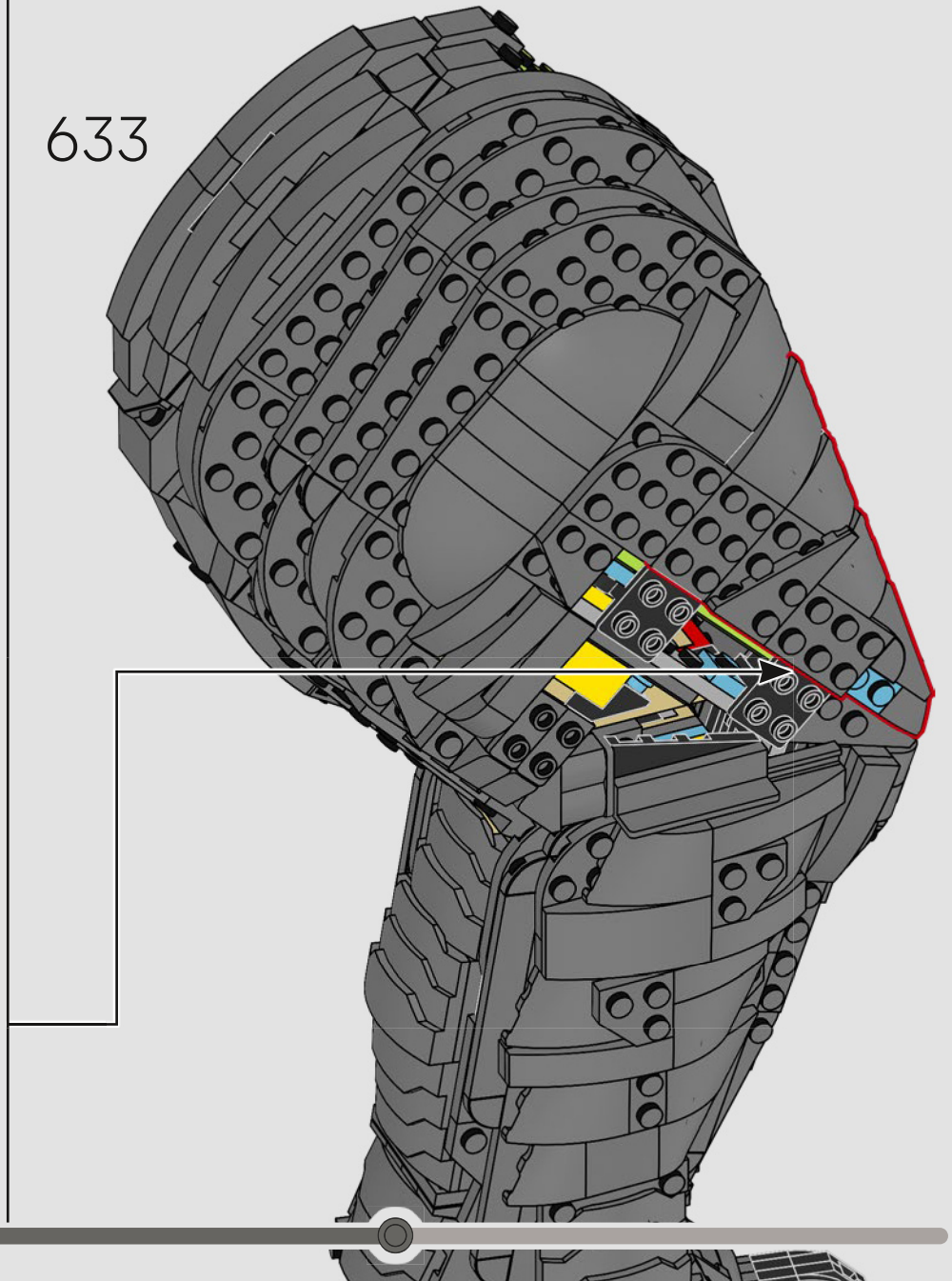

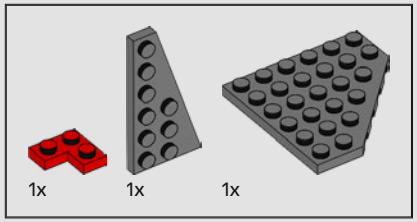


634

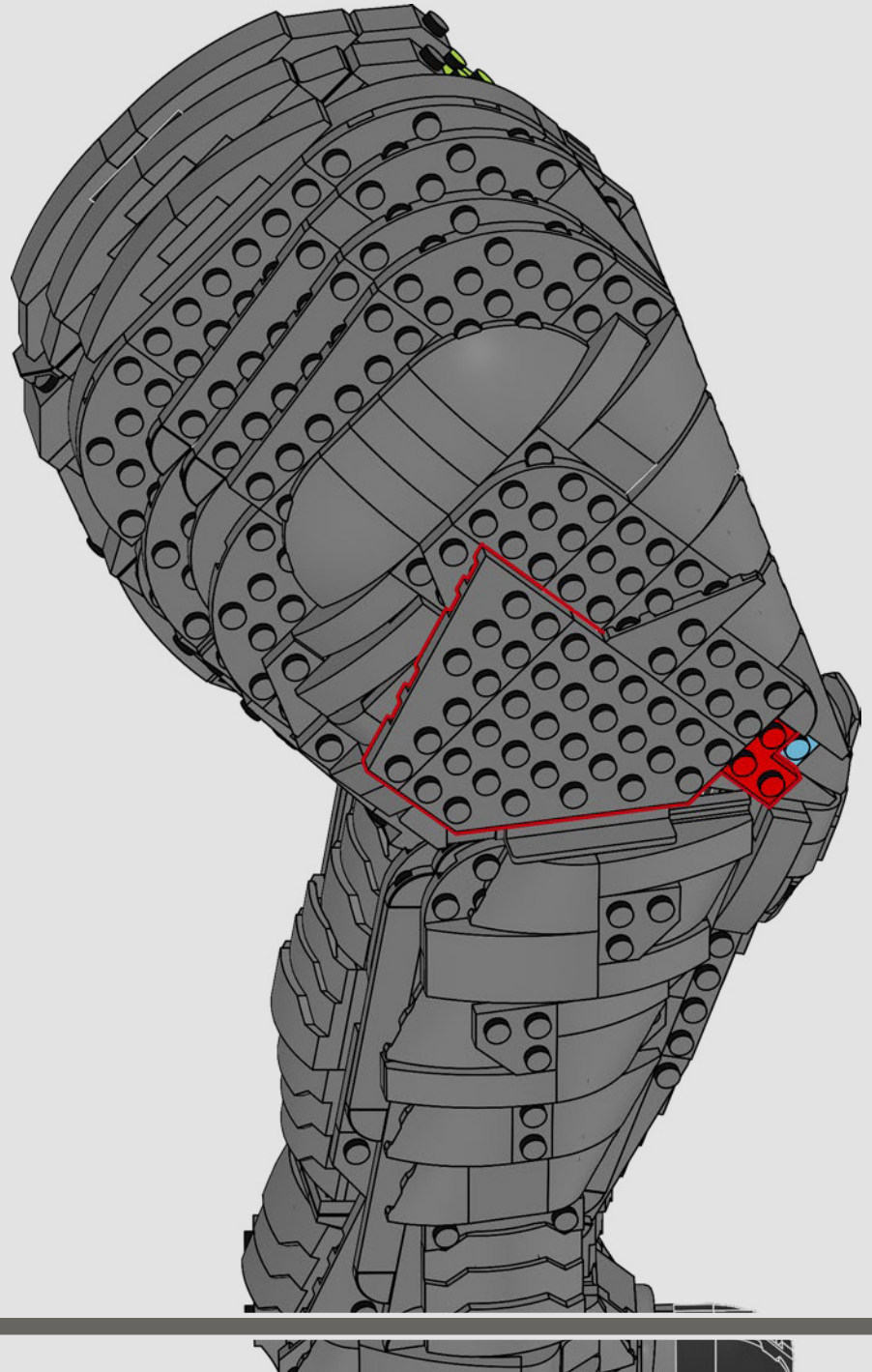

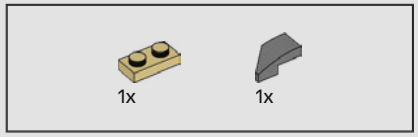


635

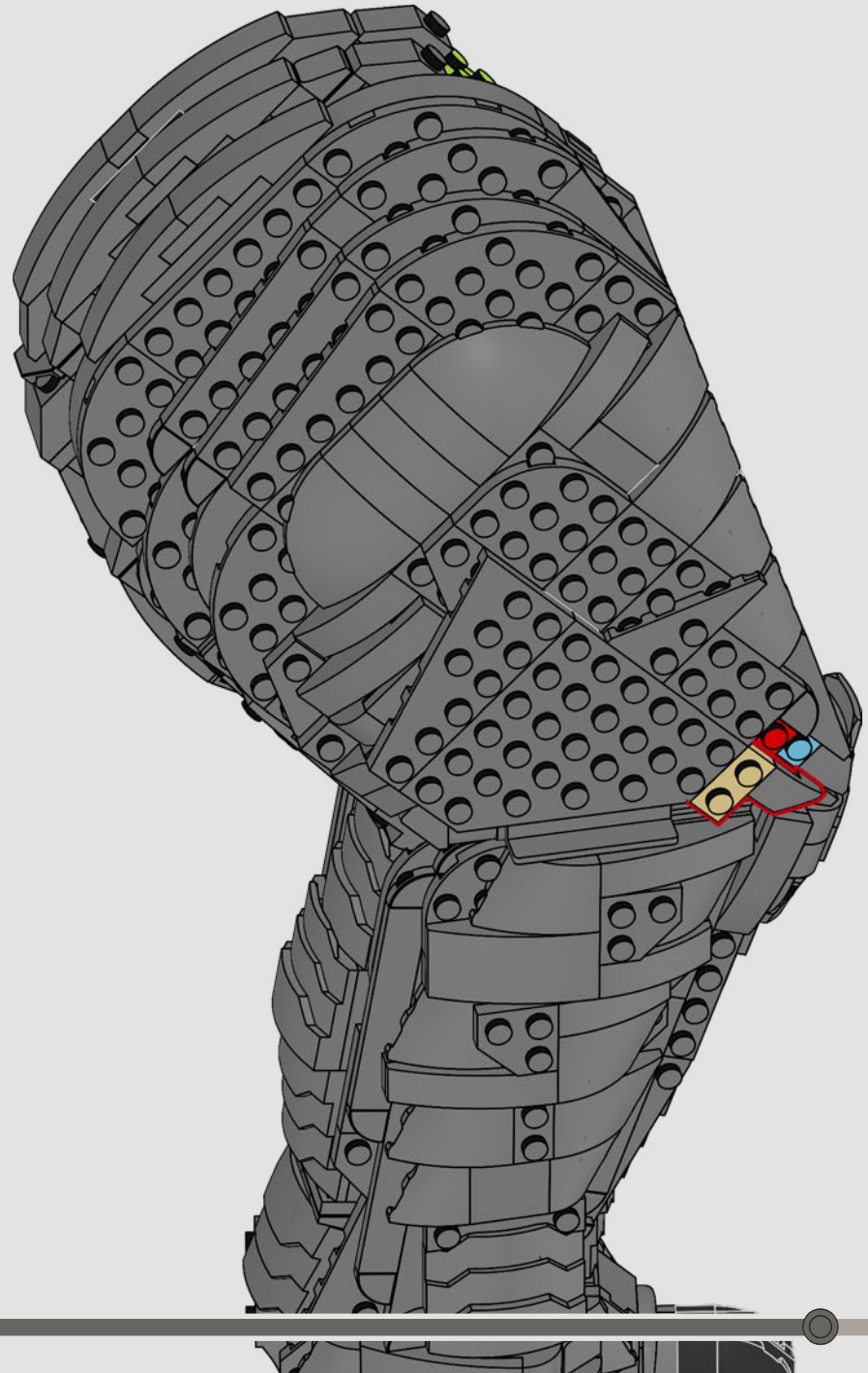

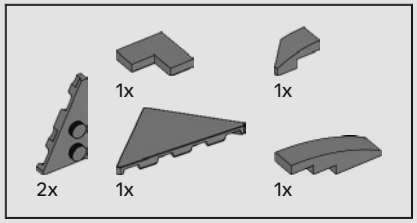


636

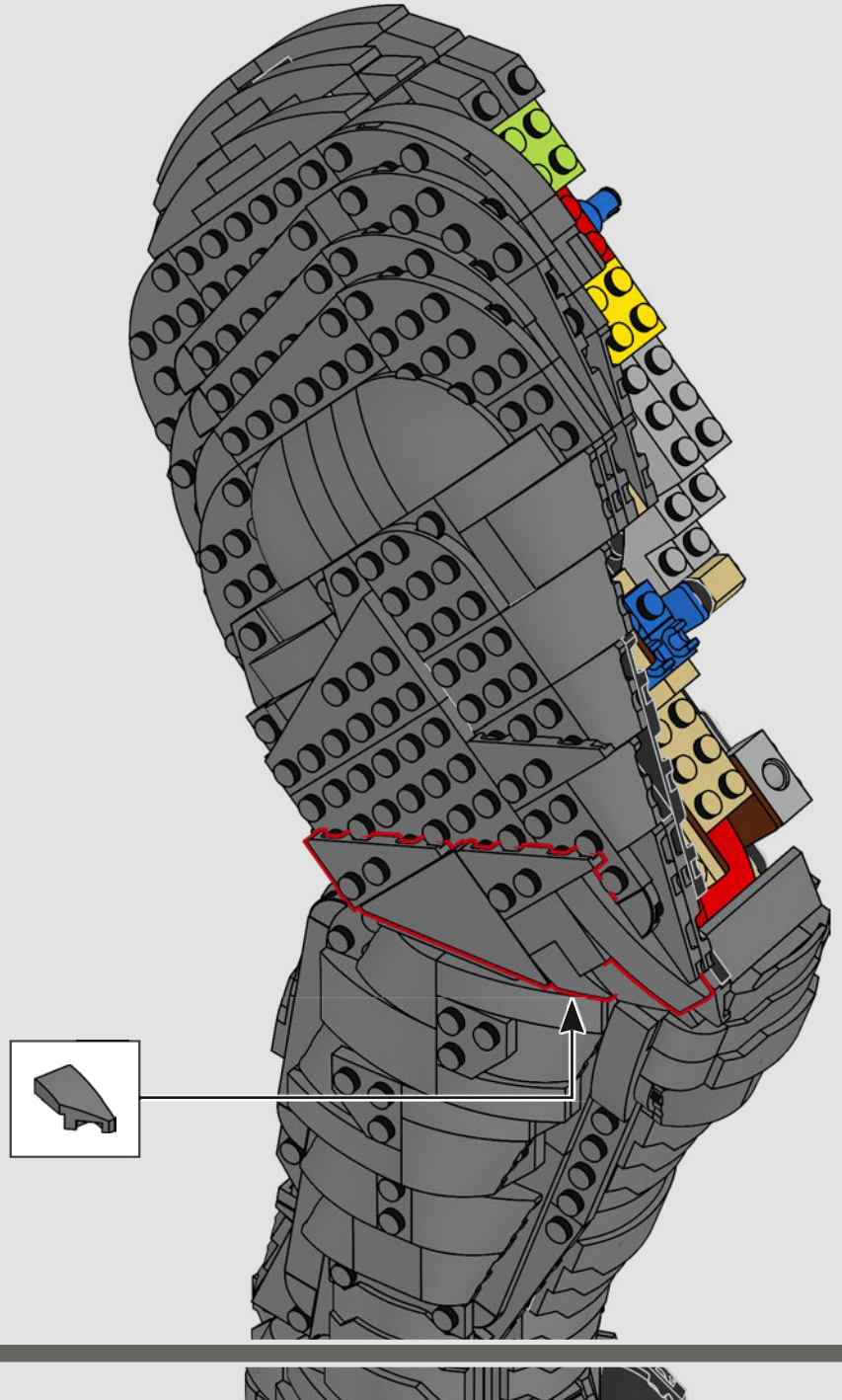

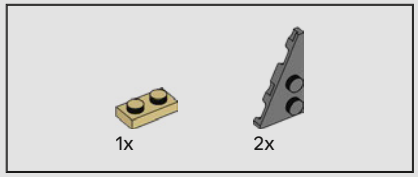


637



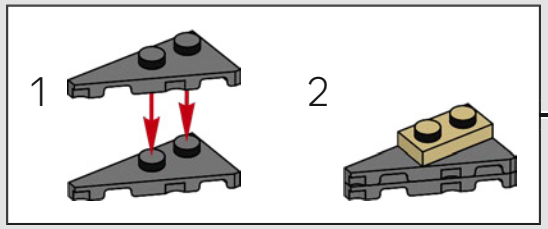


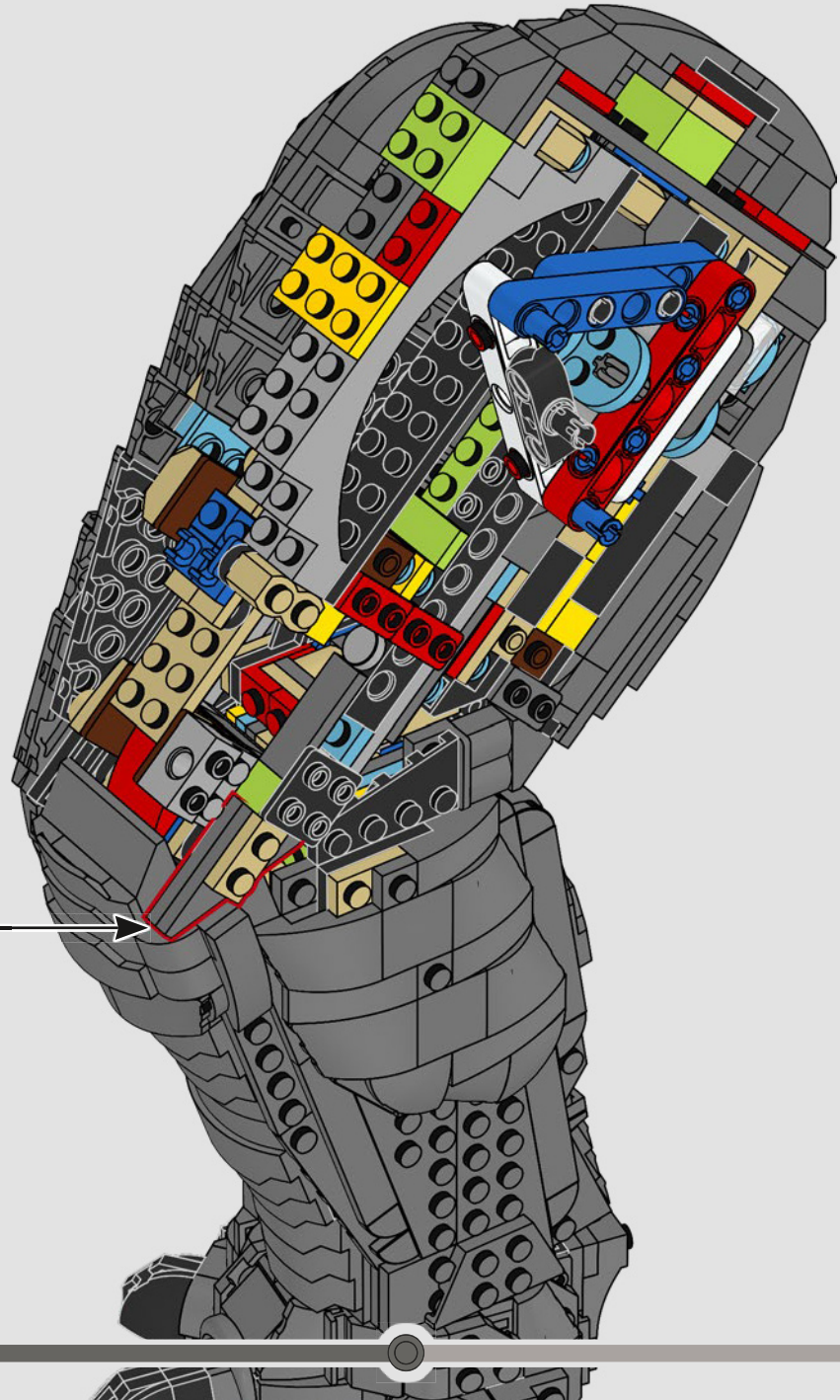

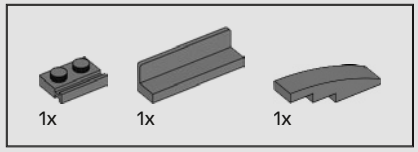


638

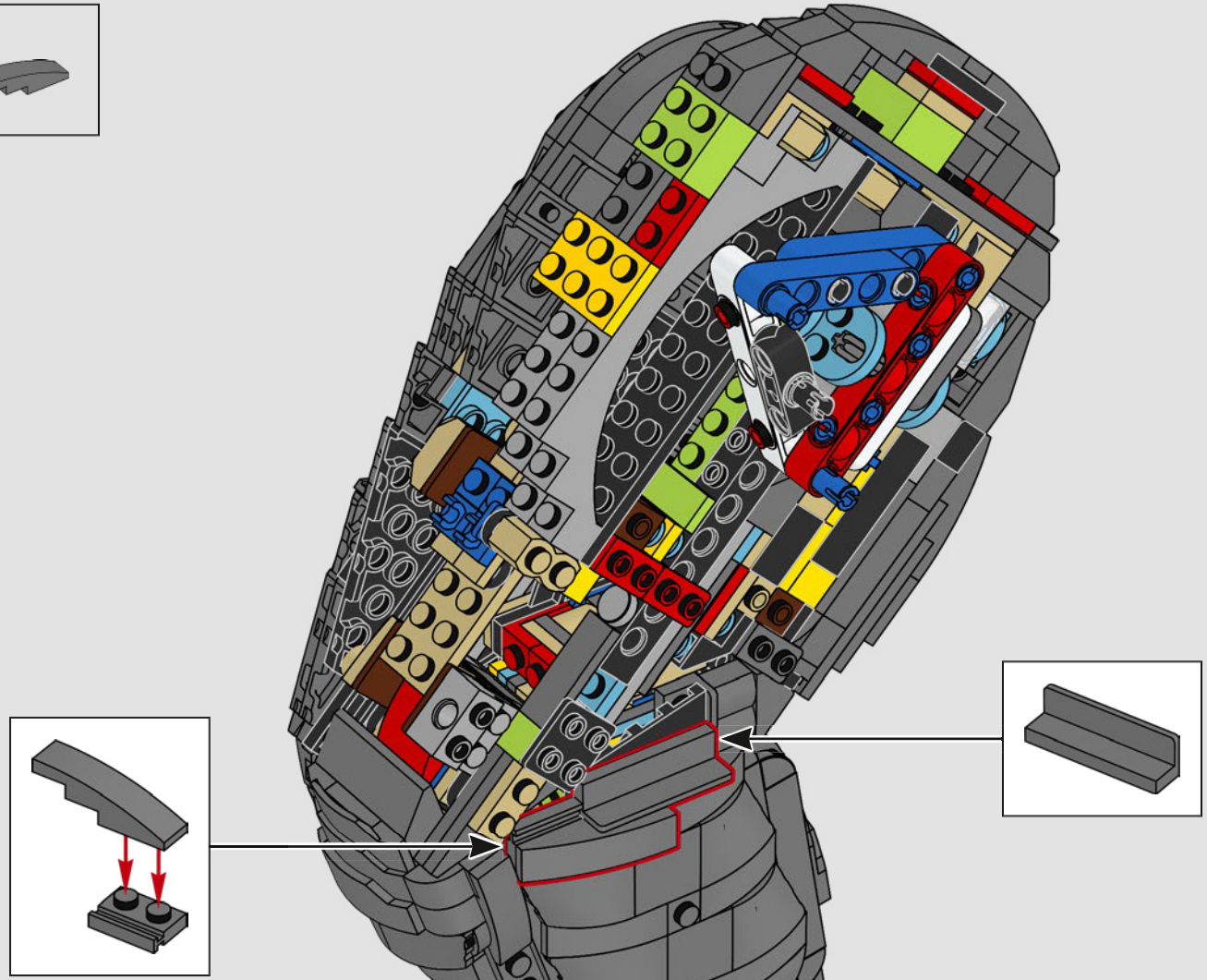

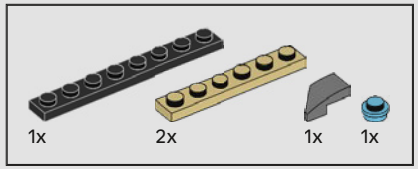


639

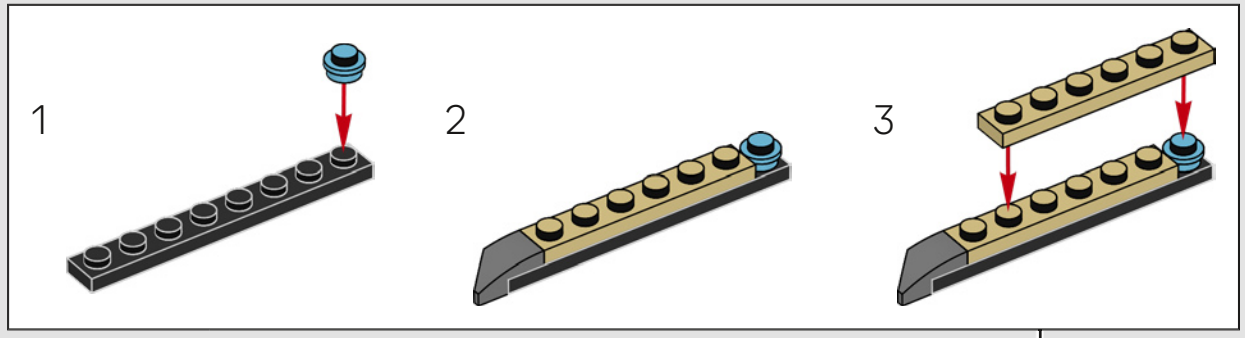


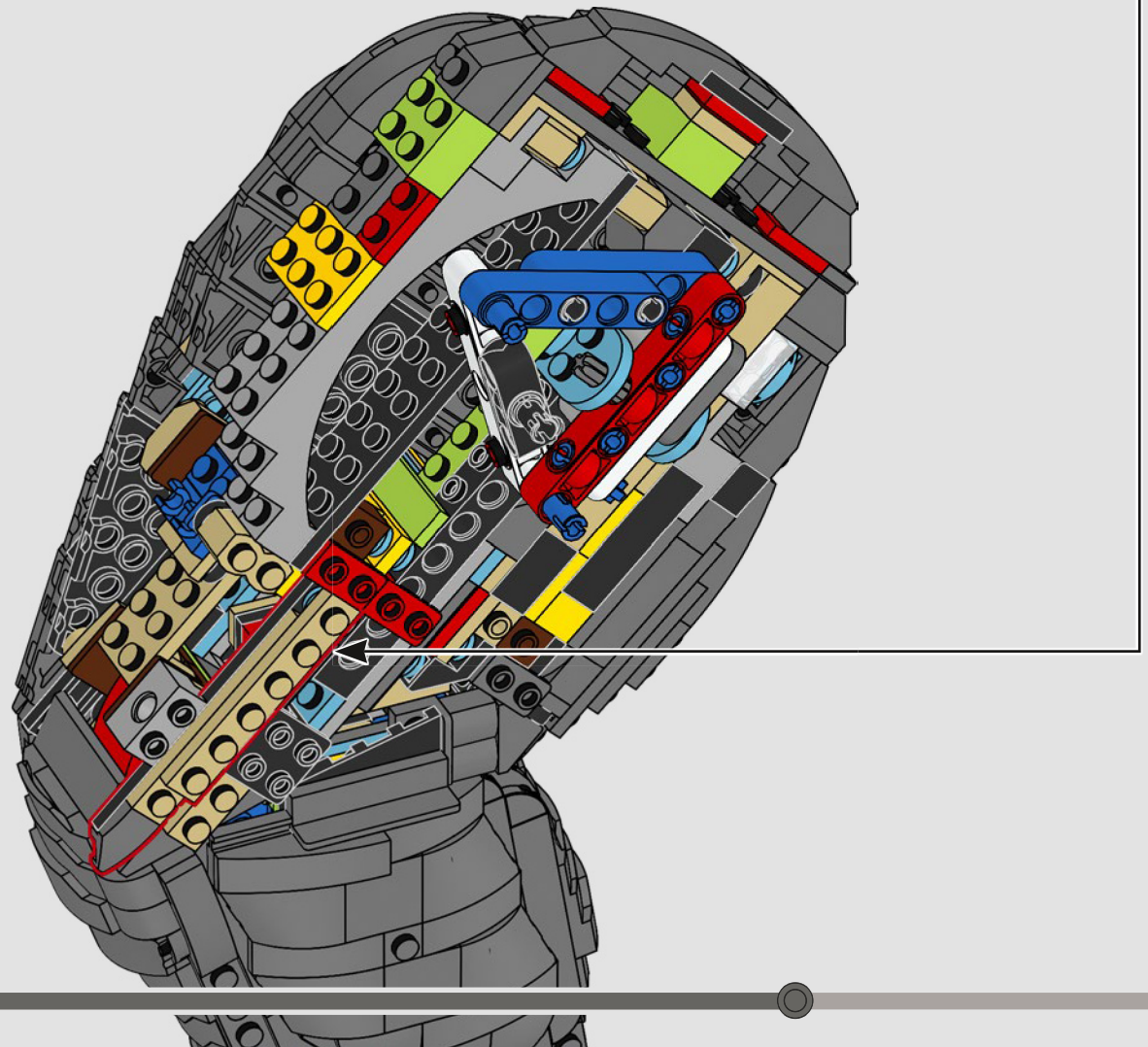

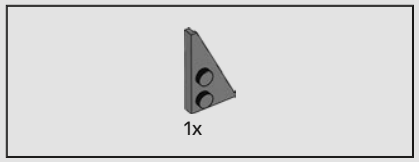


640

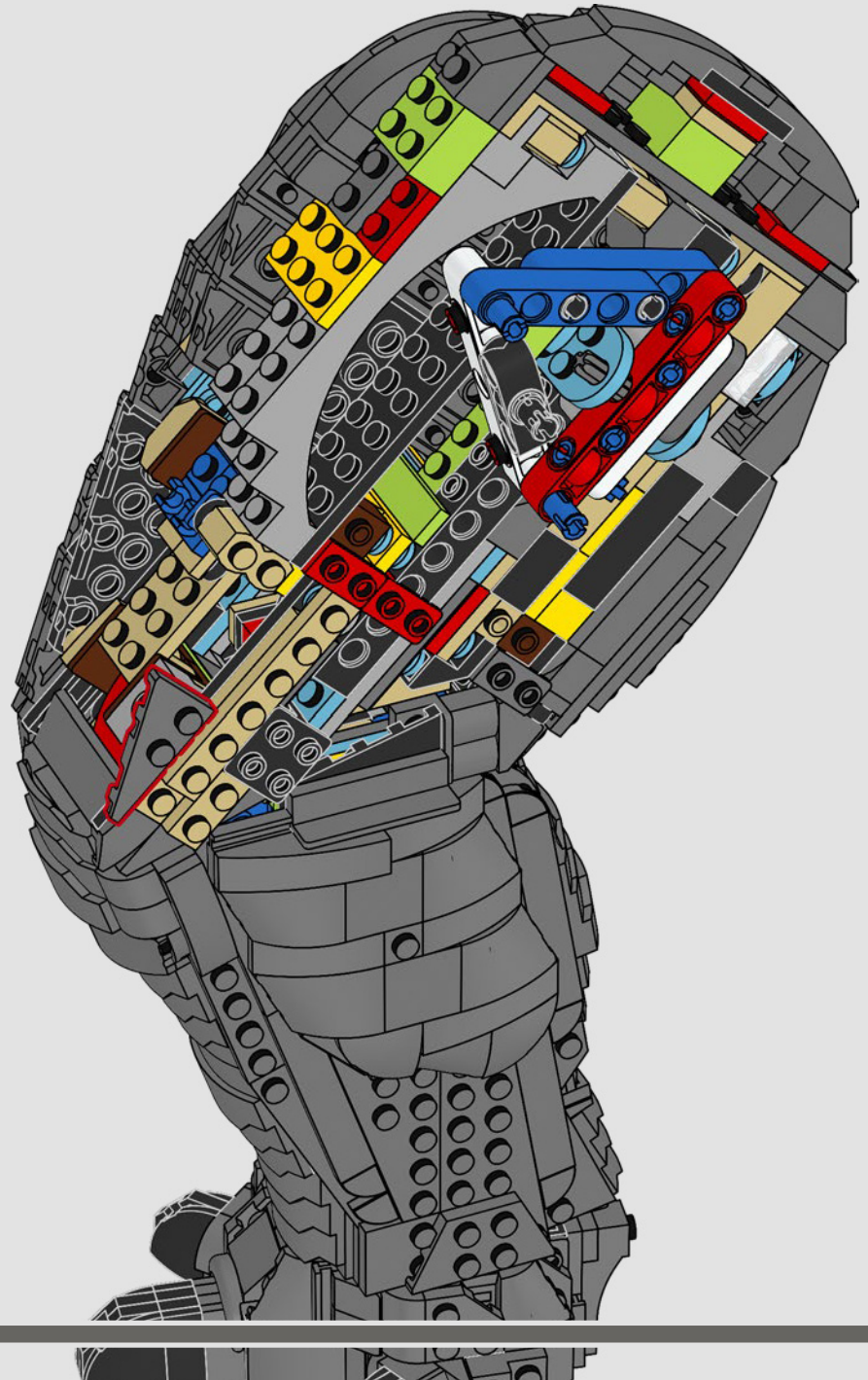

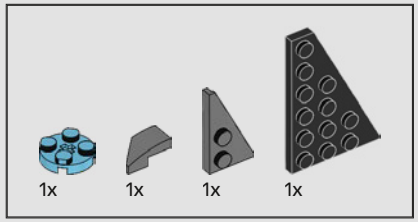


641

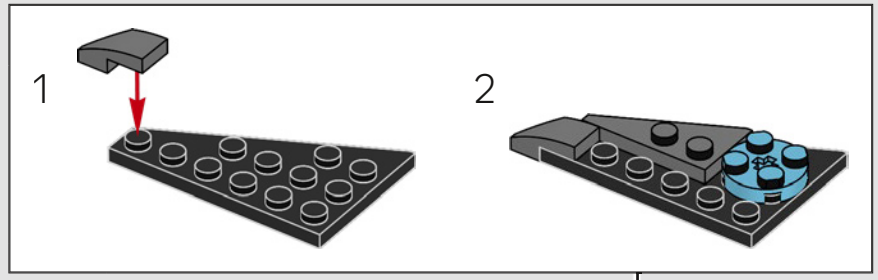


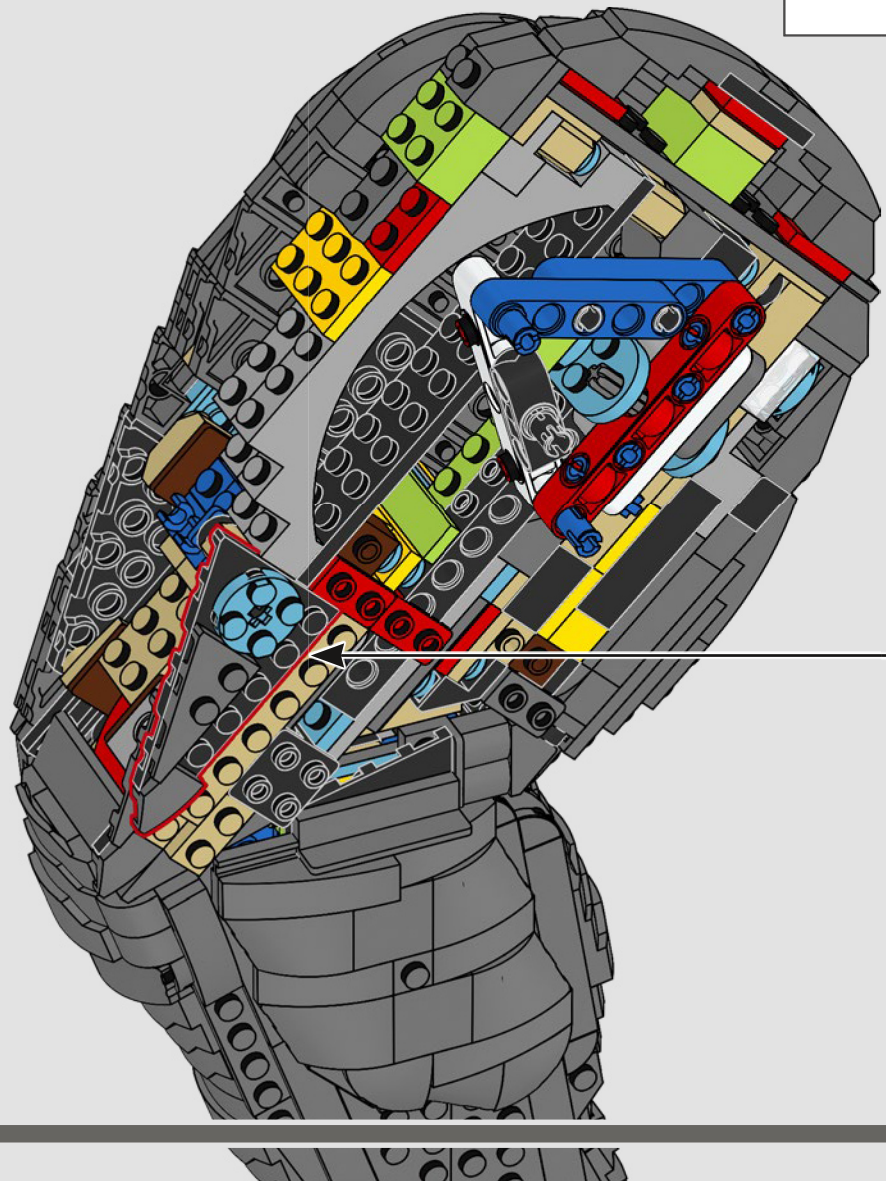

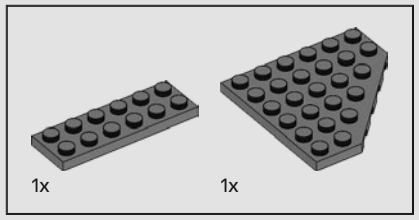


642

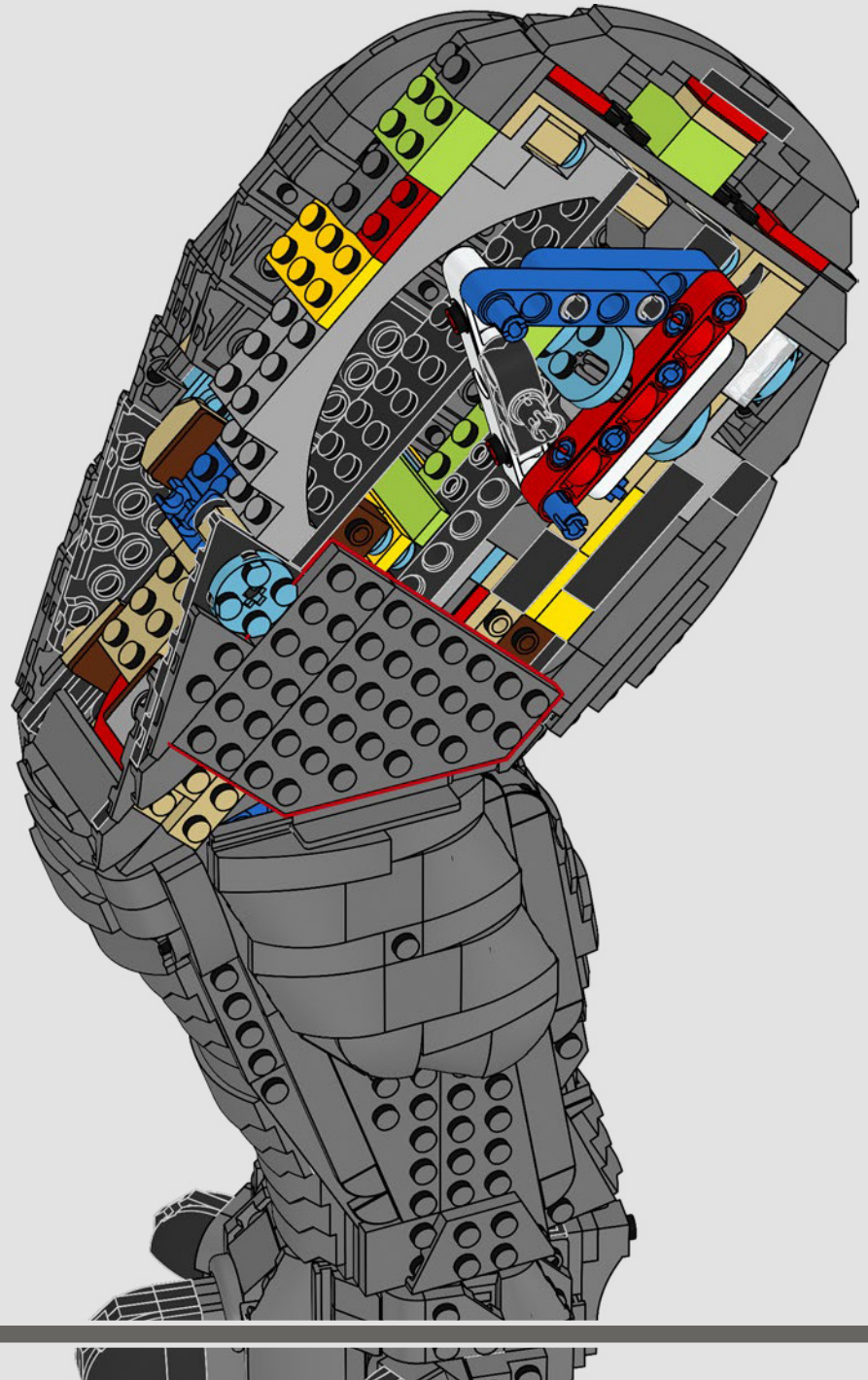

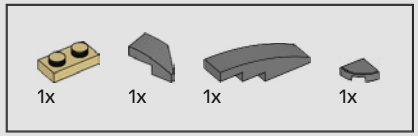


643

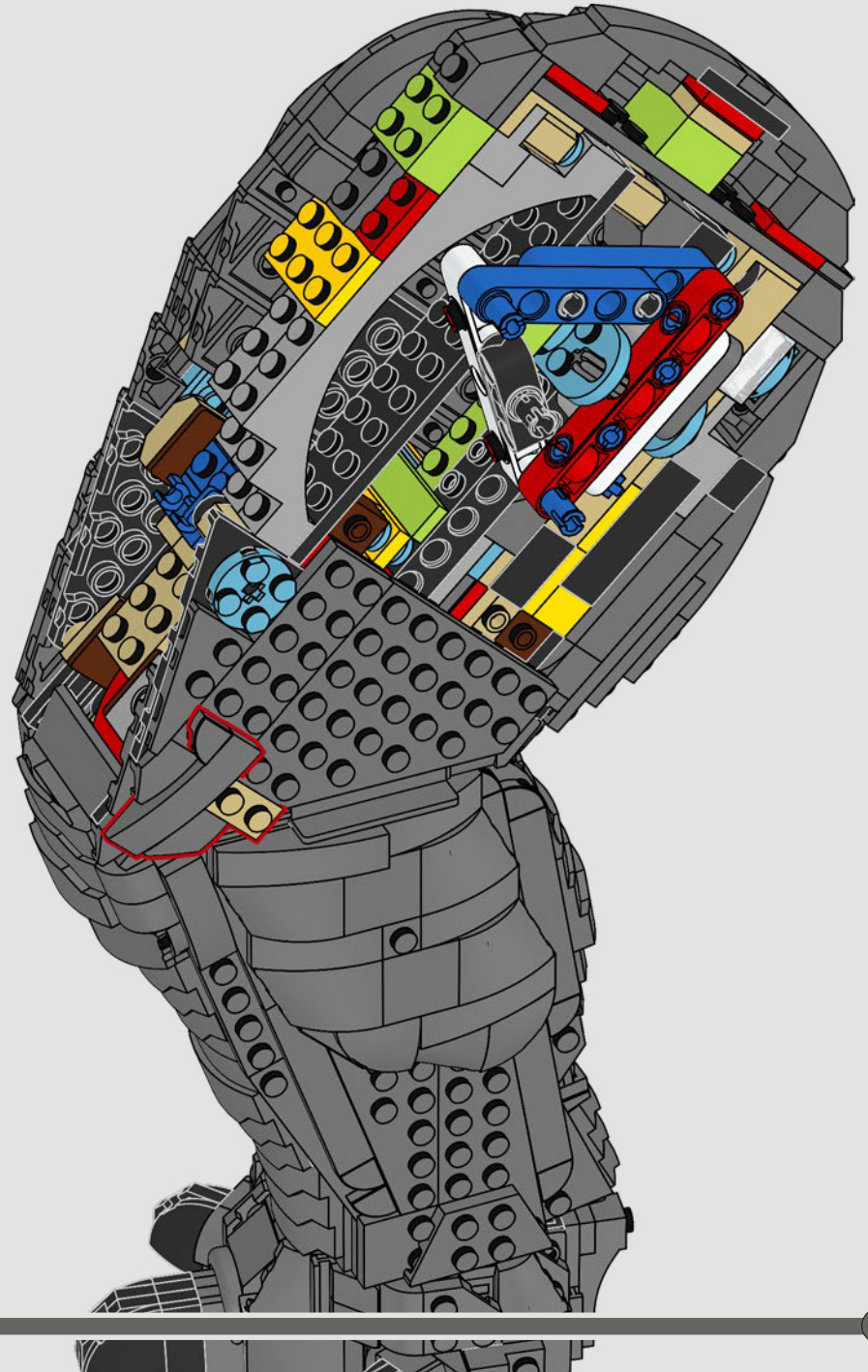

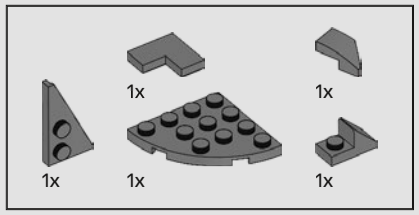


644

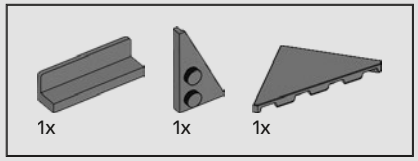


645

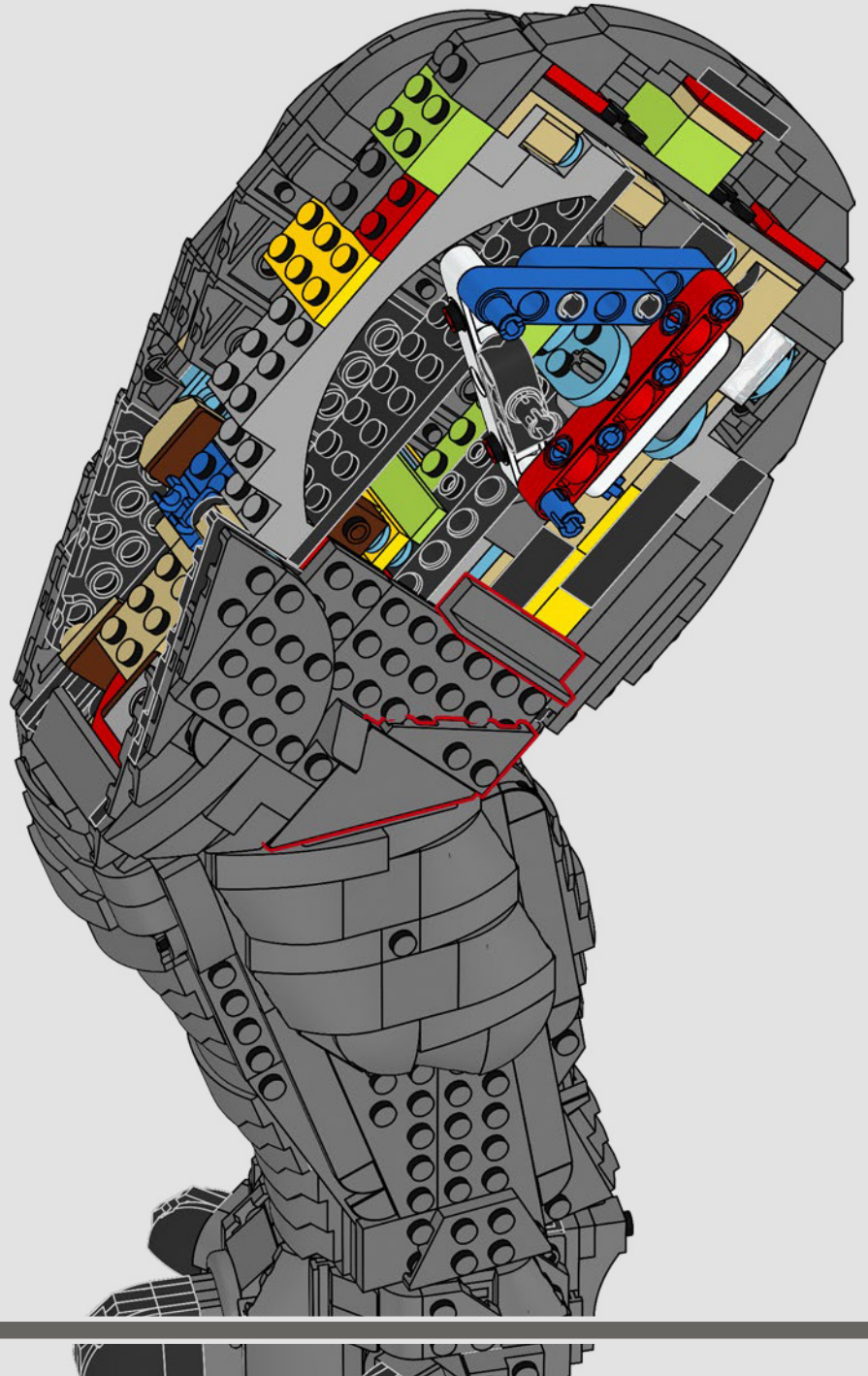

646

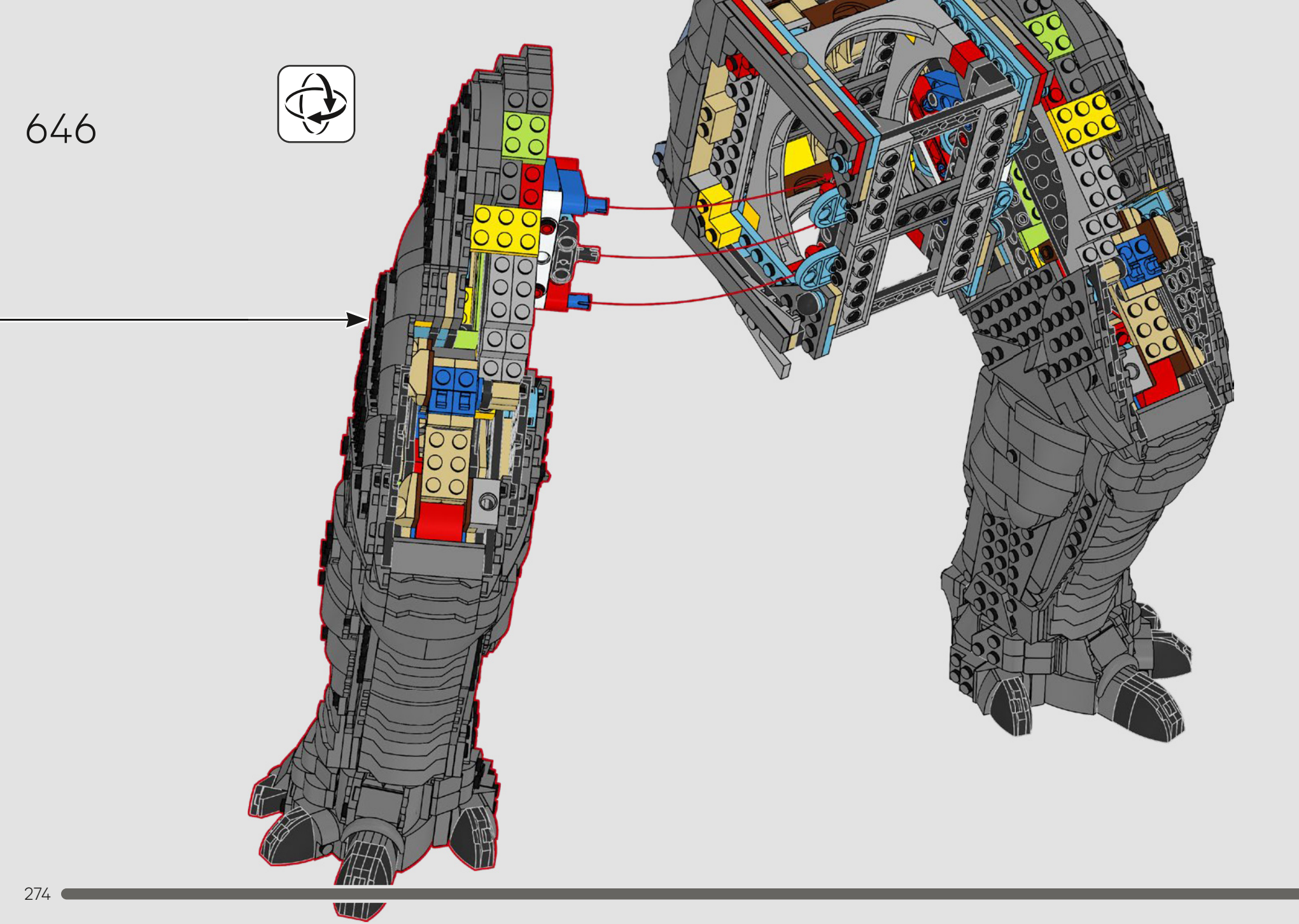

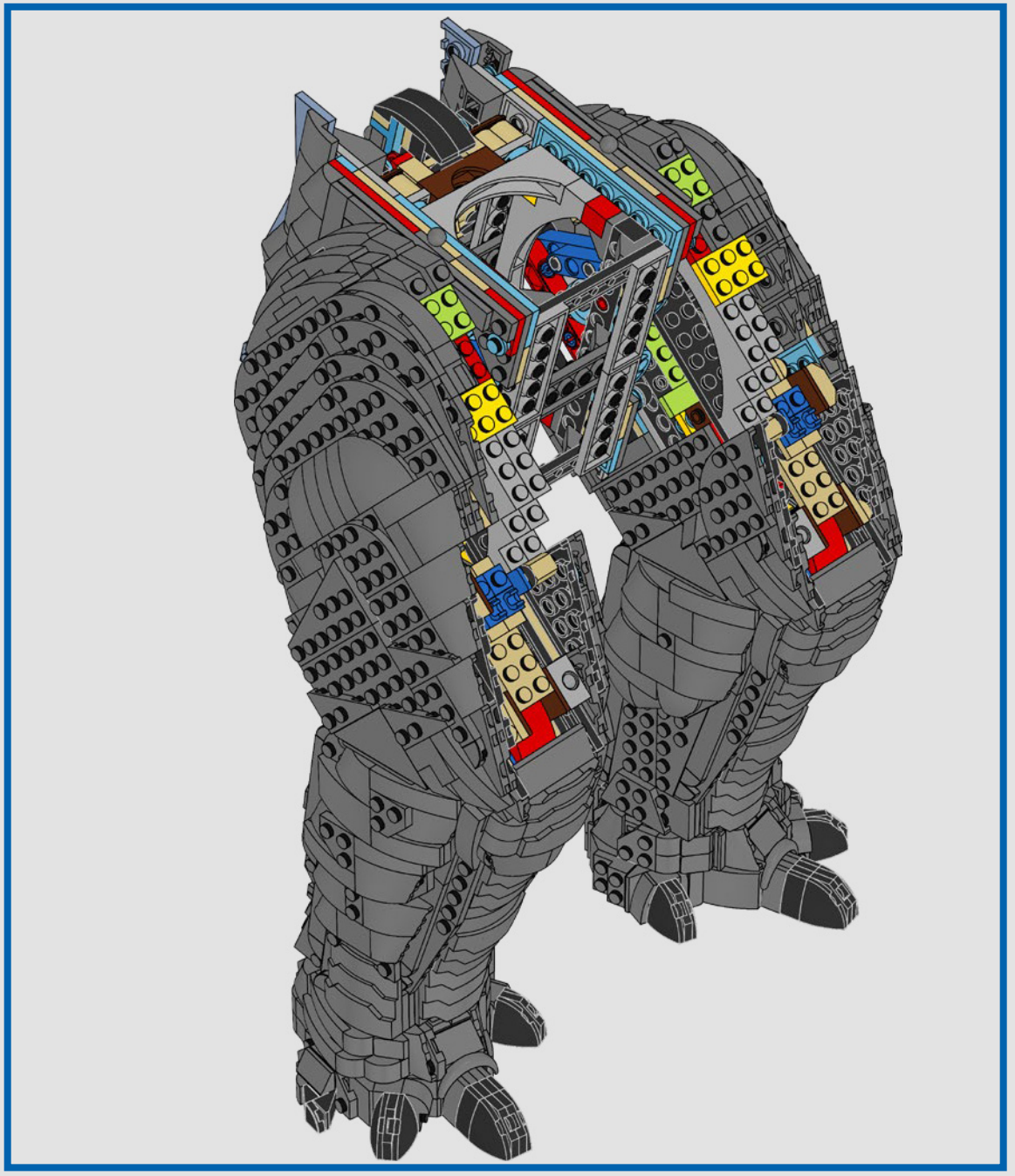




647

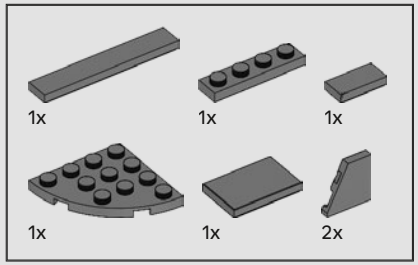


# 648

1

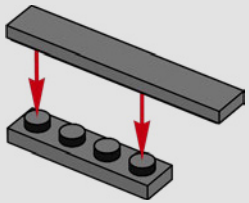

2

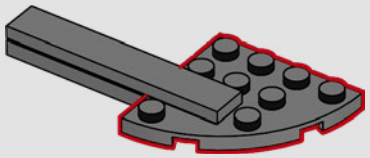

3

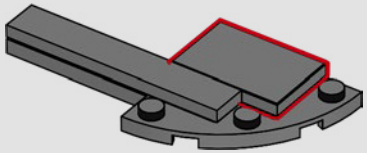

4

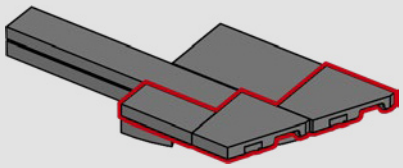

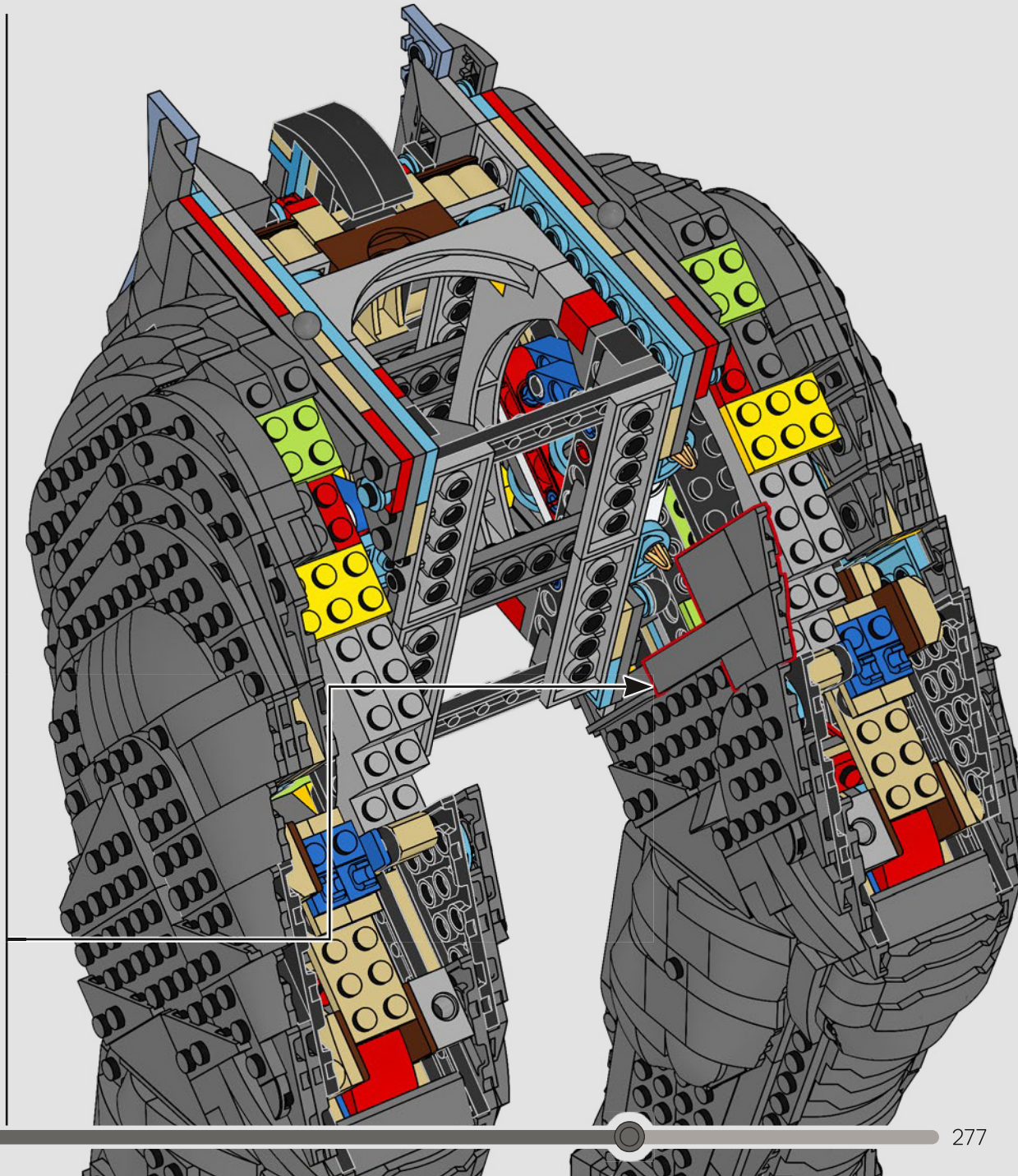

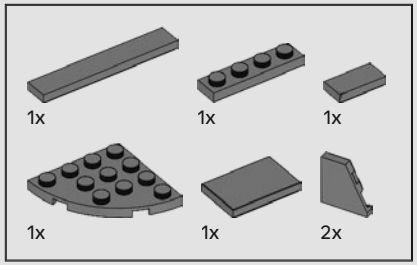


649

1

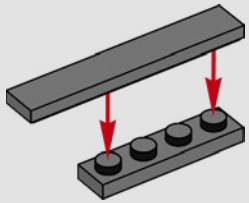

2

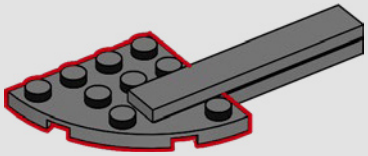

3

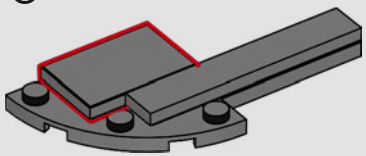

4

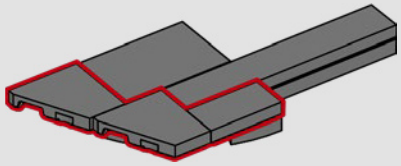

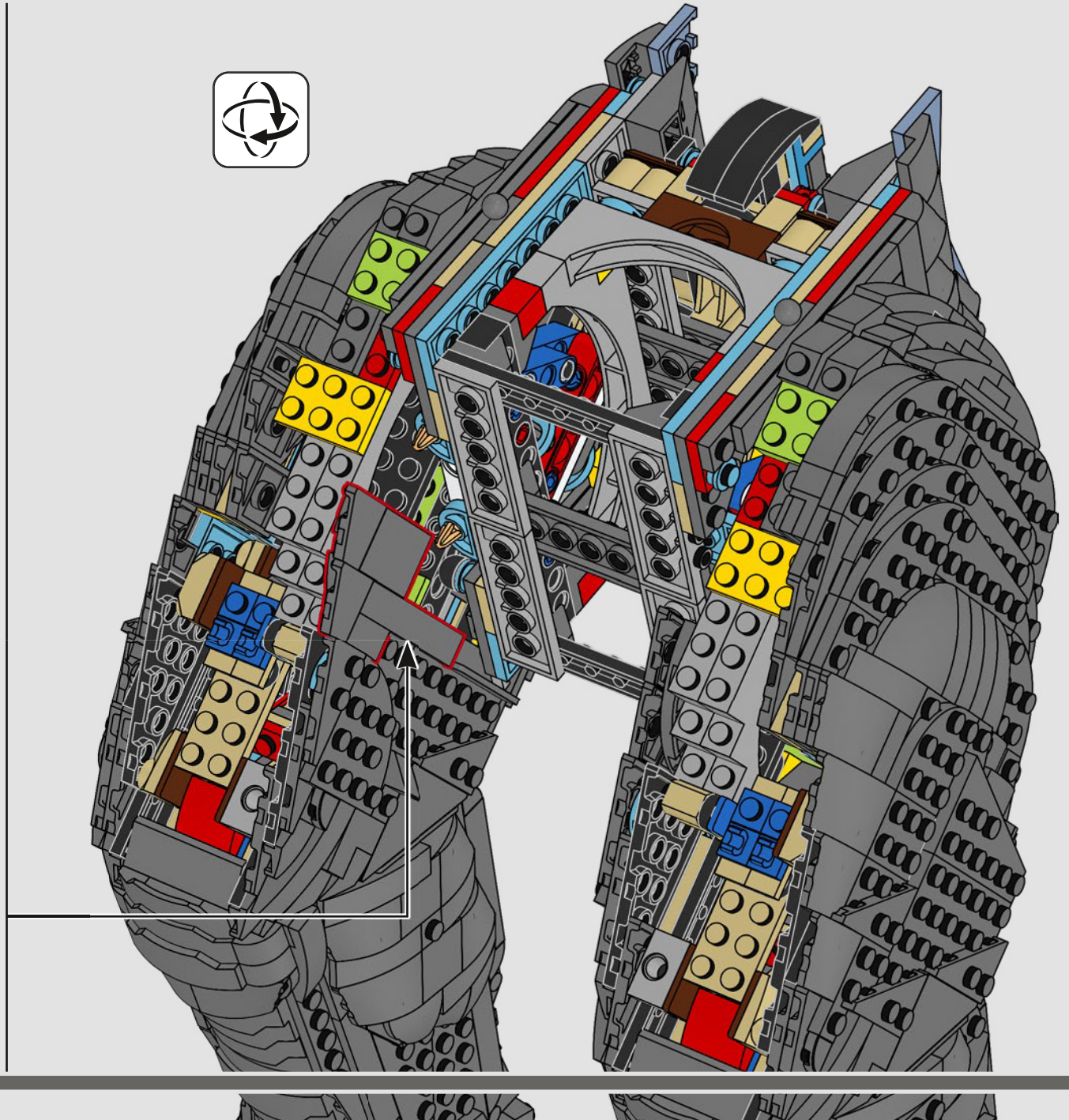




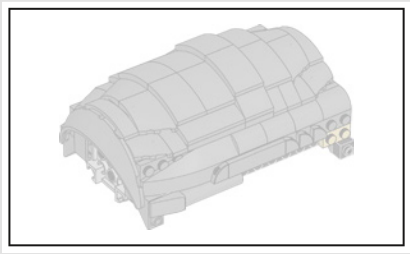

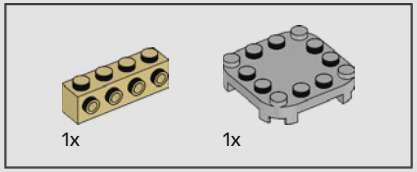


650

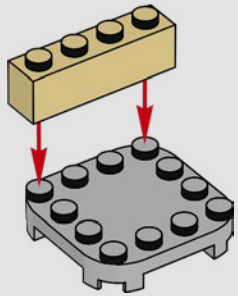

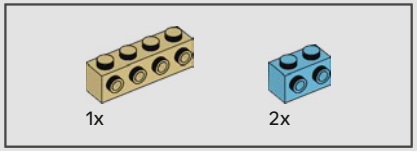


651

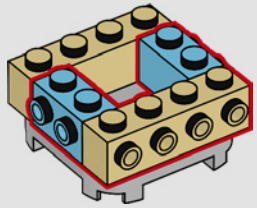

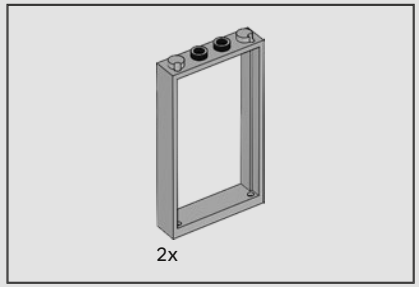


652

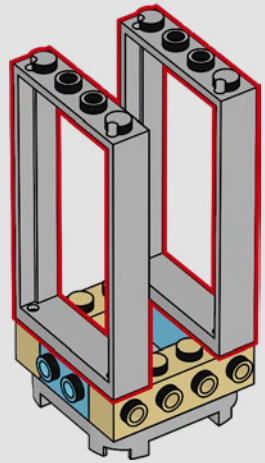

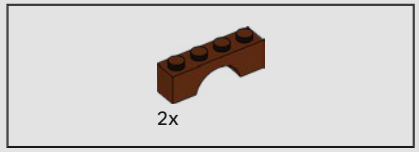


653

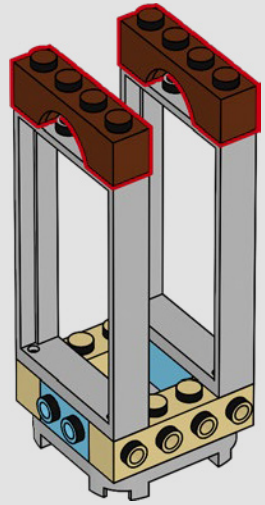

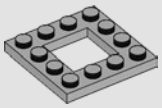
1x

654

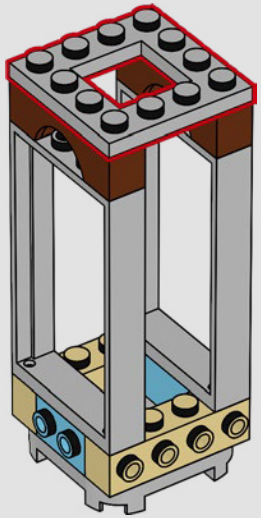


1x

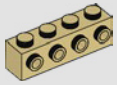
1x


2x

655

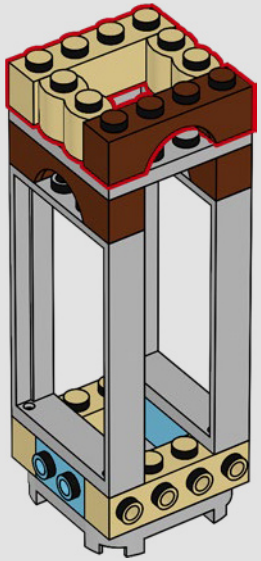


2x


2x

656

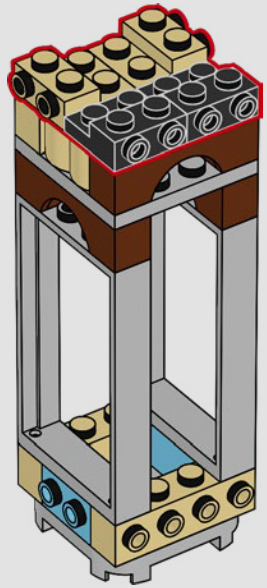


2x

657

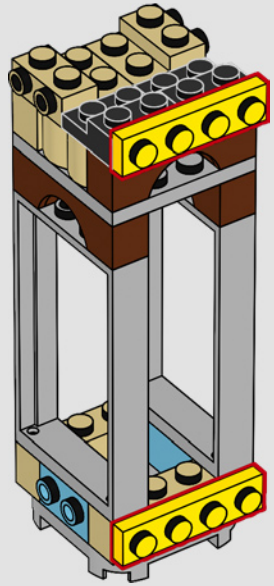

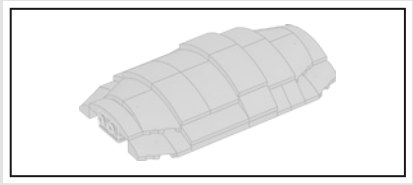

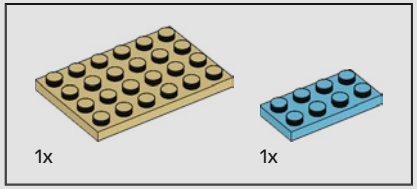


658

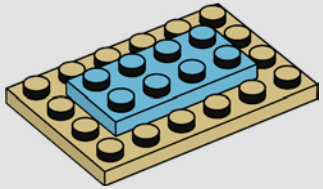

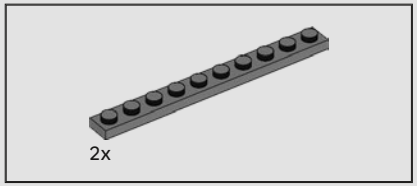


659

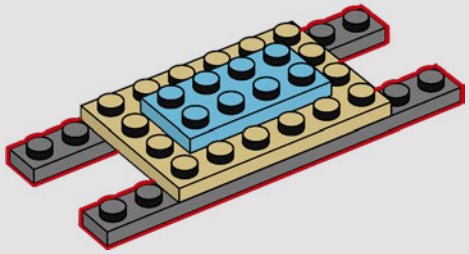

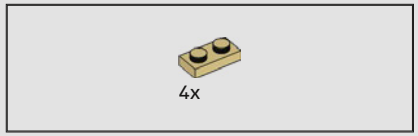


660

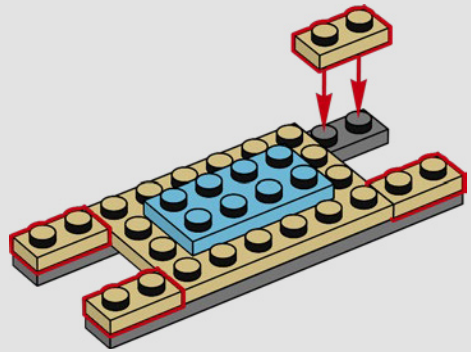

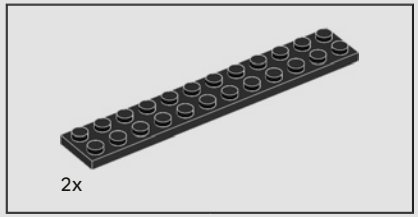


661

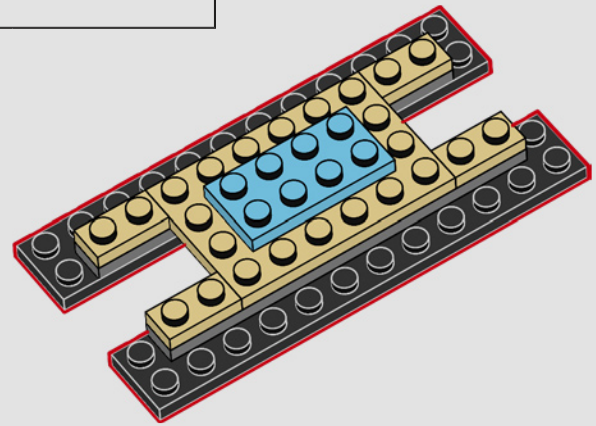

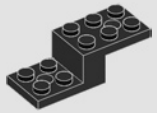


662

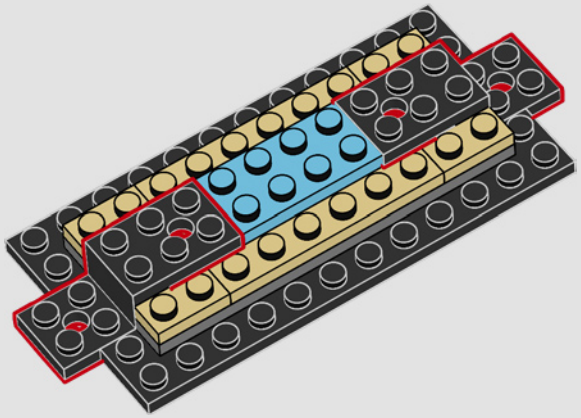








663

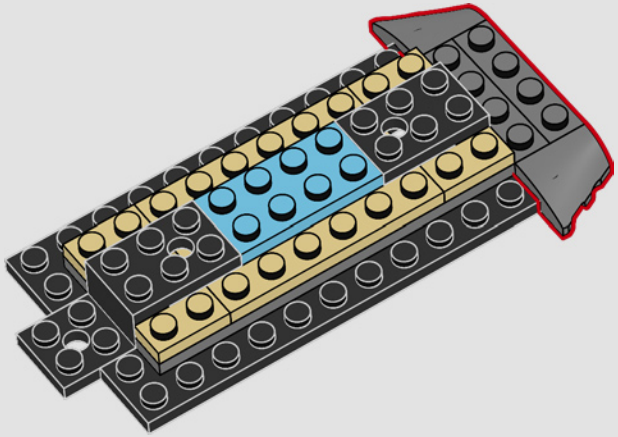








664

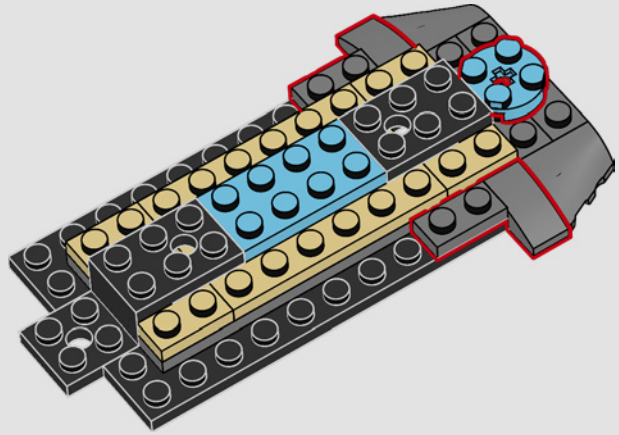






665

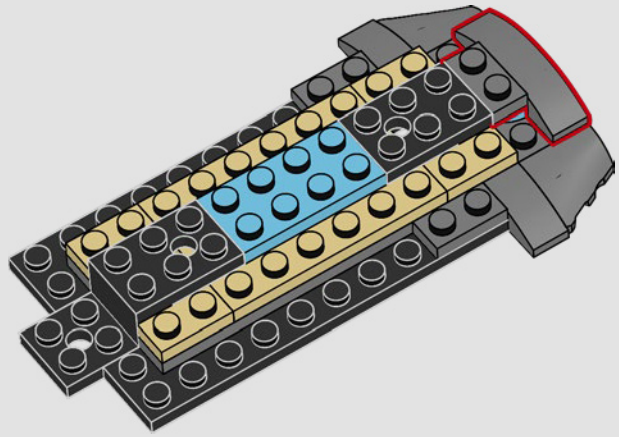

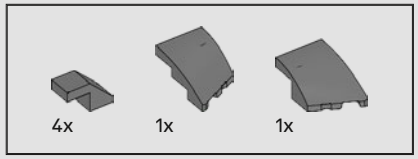


666

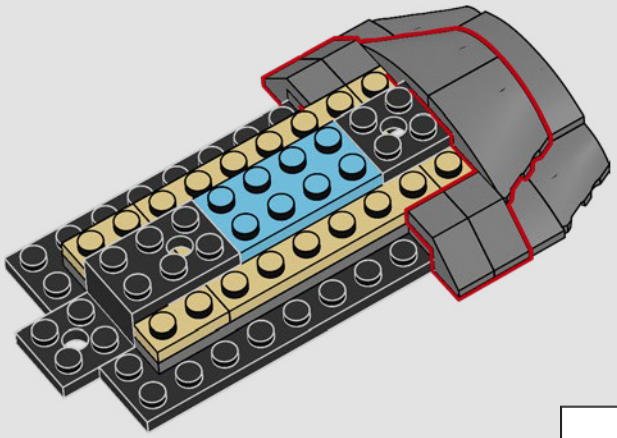

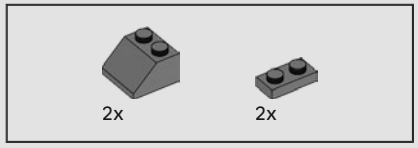


667

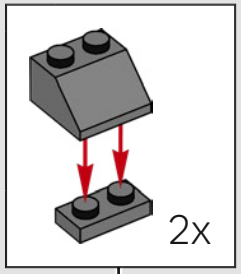


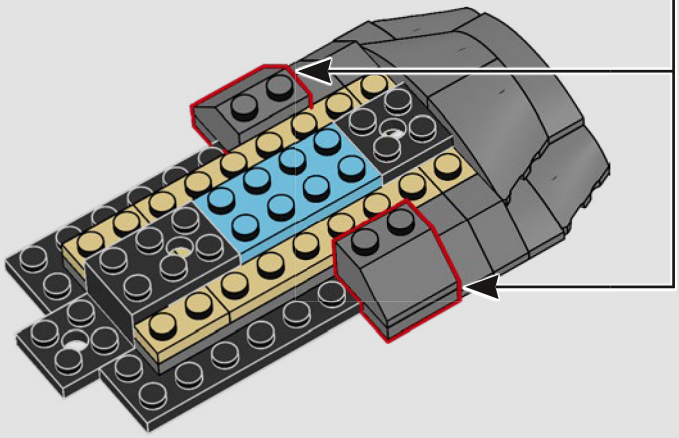

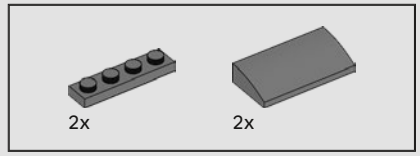


668

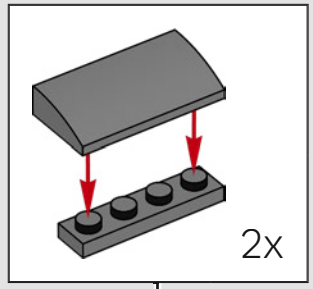


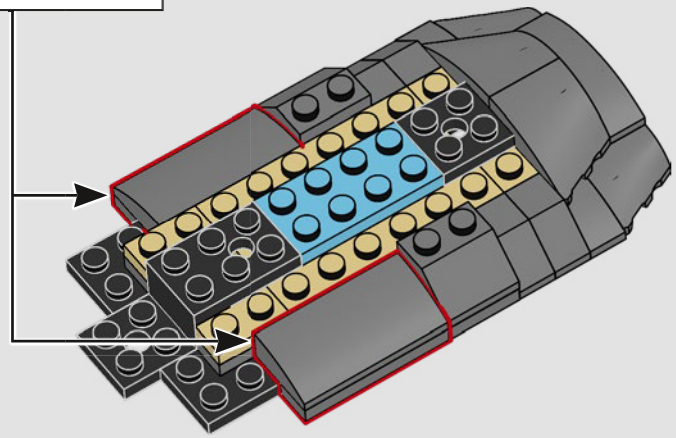

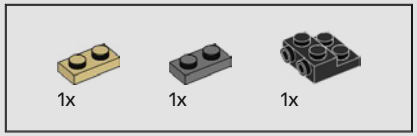


669

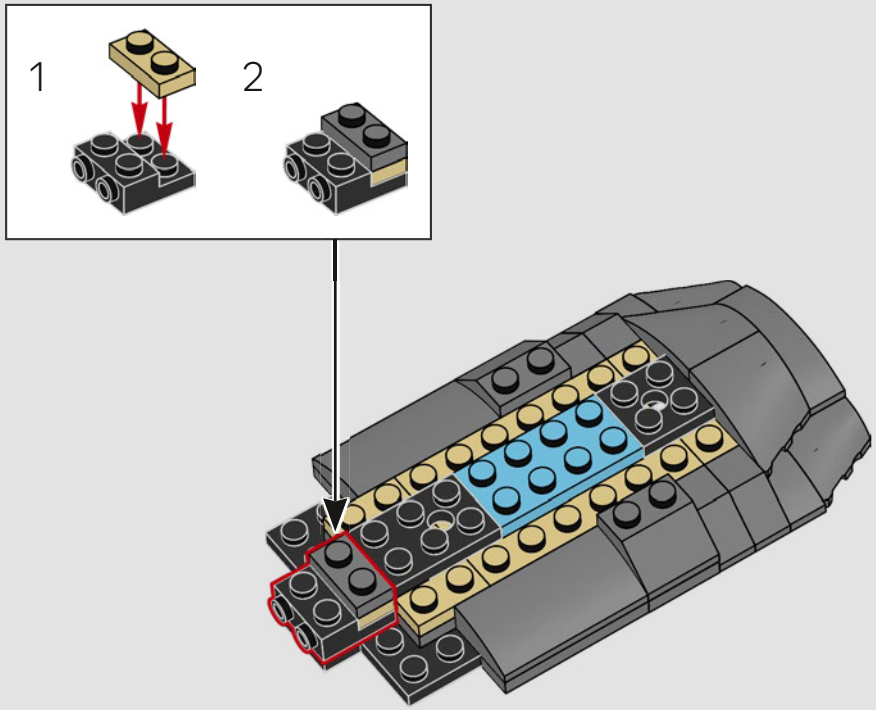


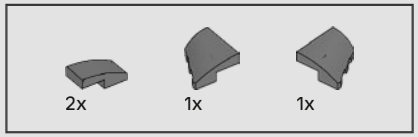


670

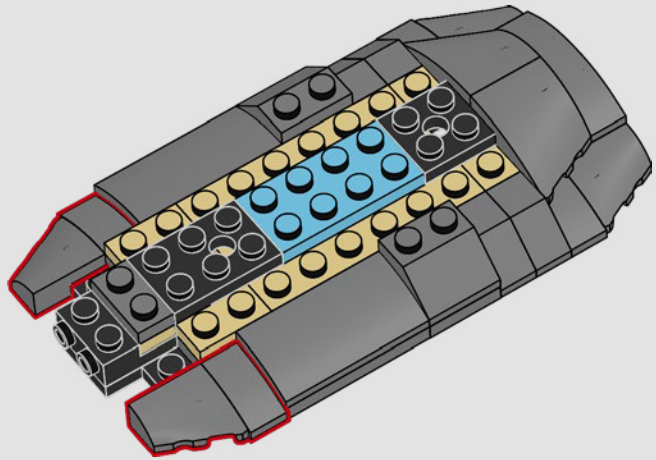

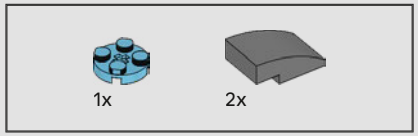


671

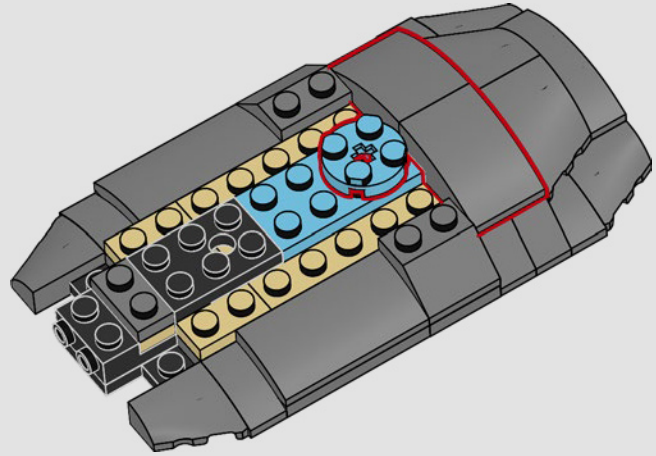

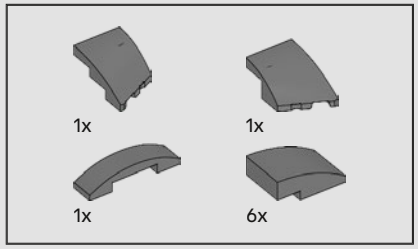


672

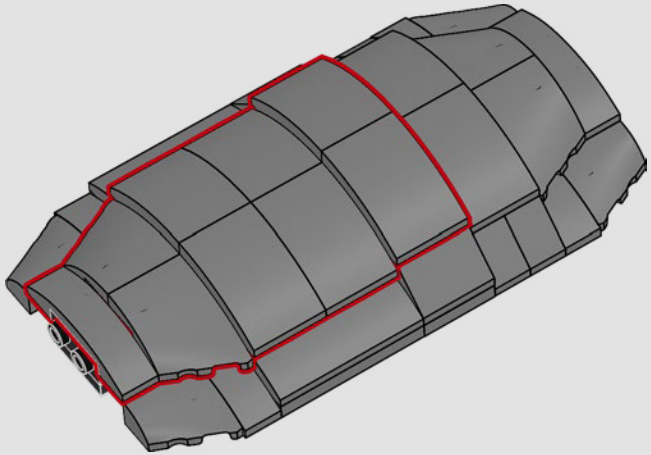

673

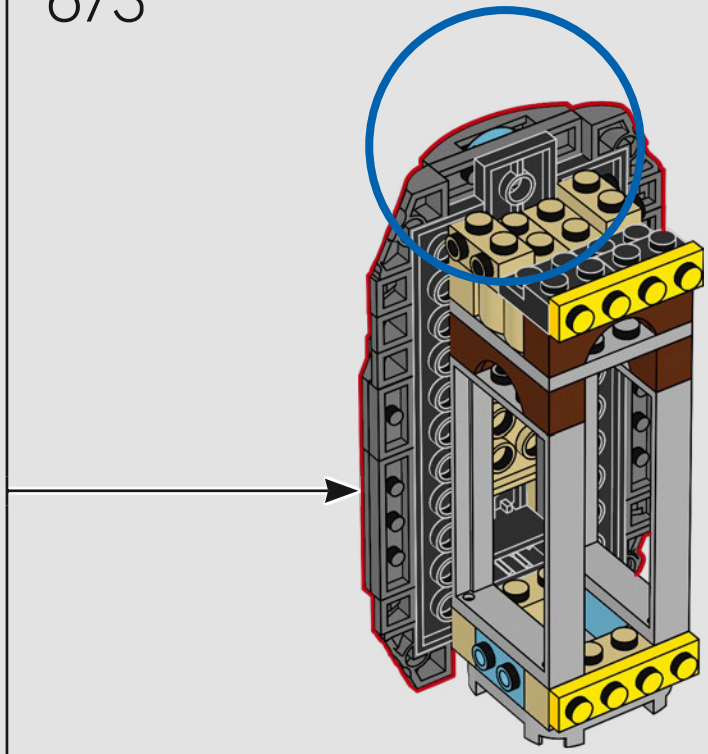

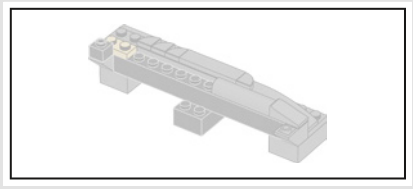

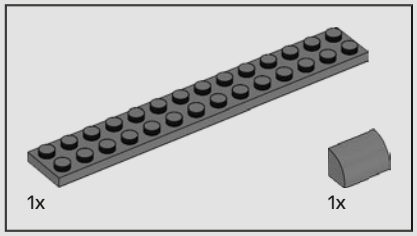


674

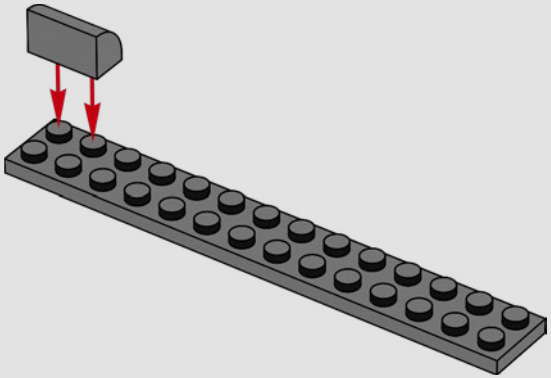

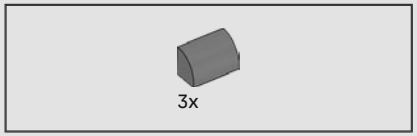


675

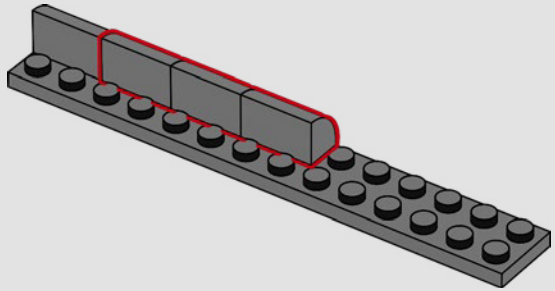

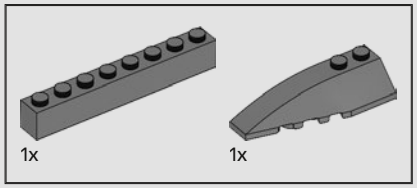


676

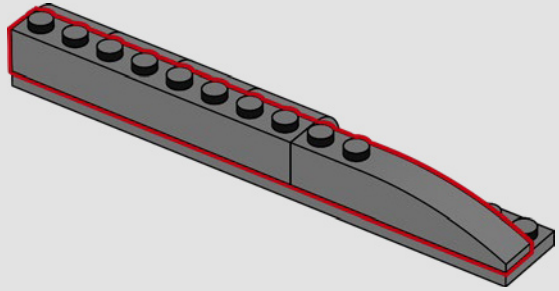

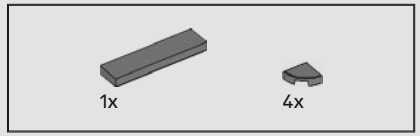


677

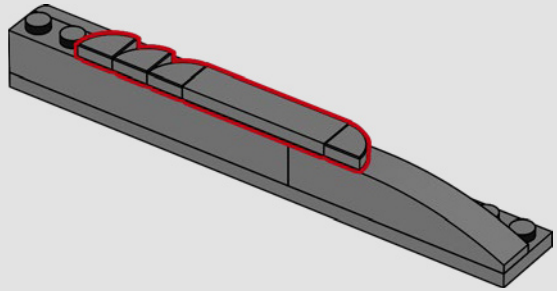

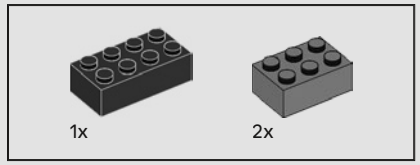


678

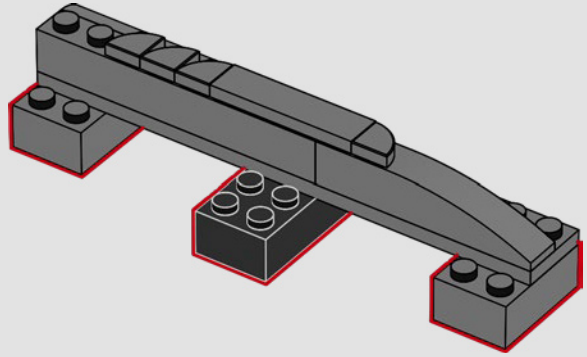

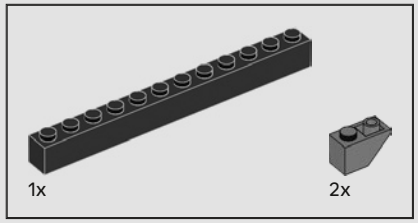


679

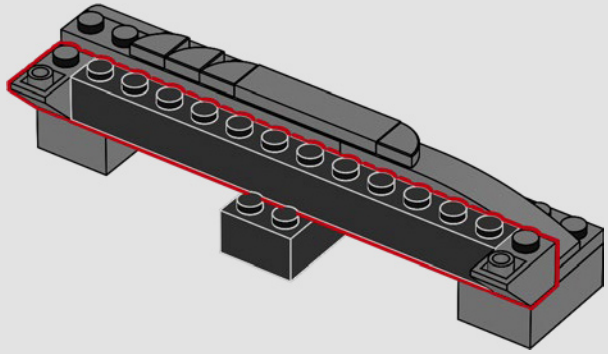

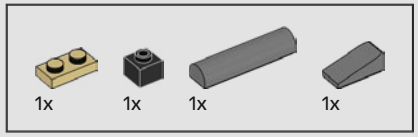


680

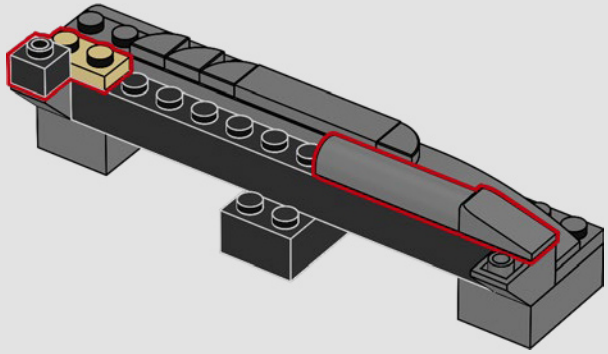

681

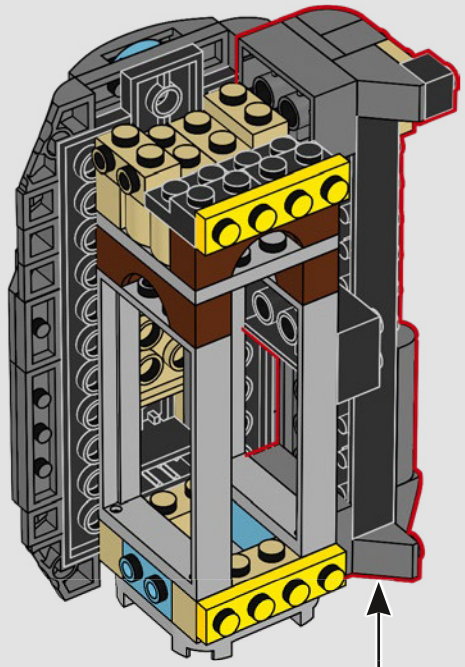

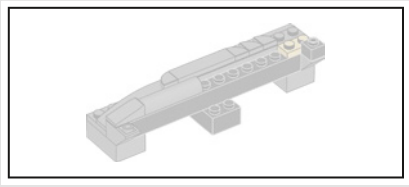

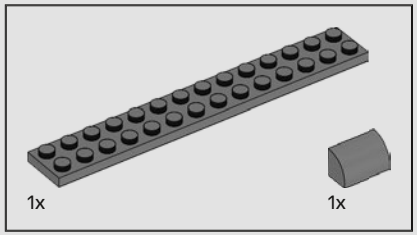


682

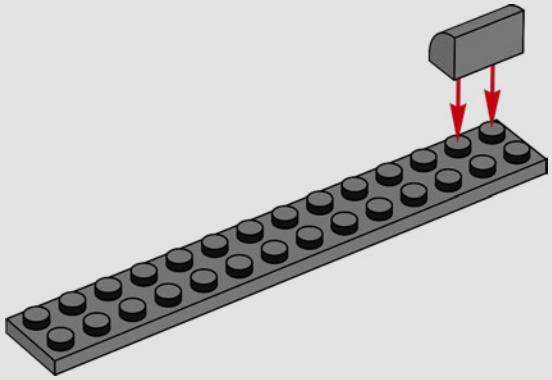

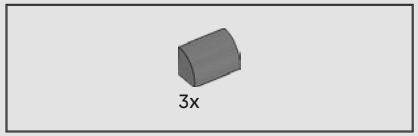


683

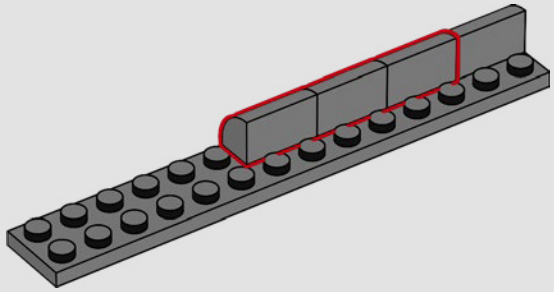

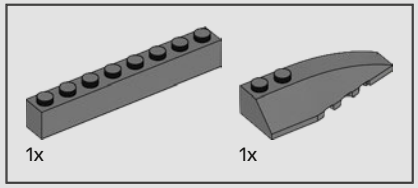


684

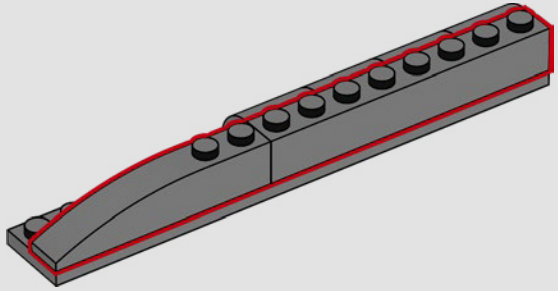

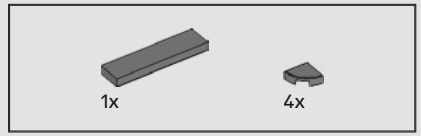


685

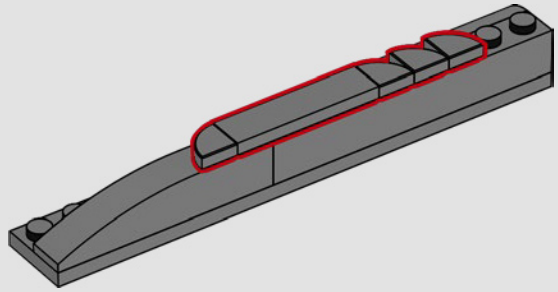

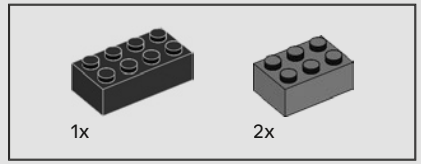


686

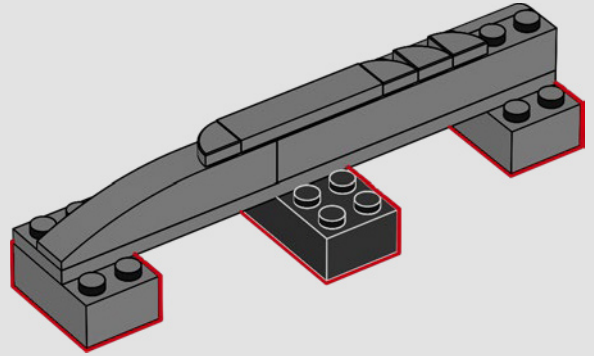

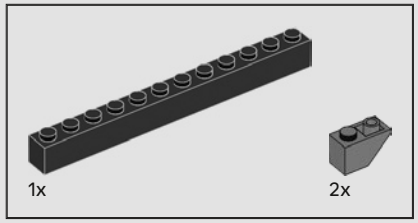


687

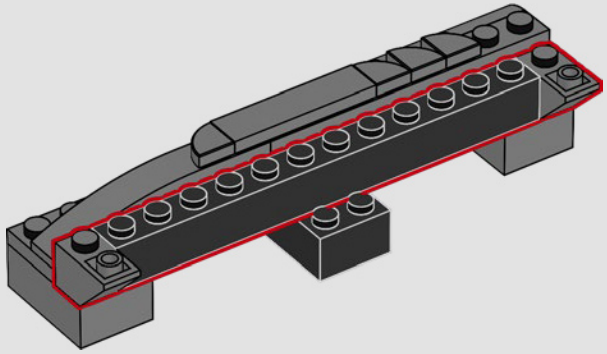

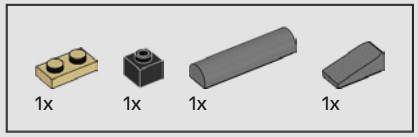


688

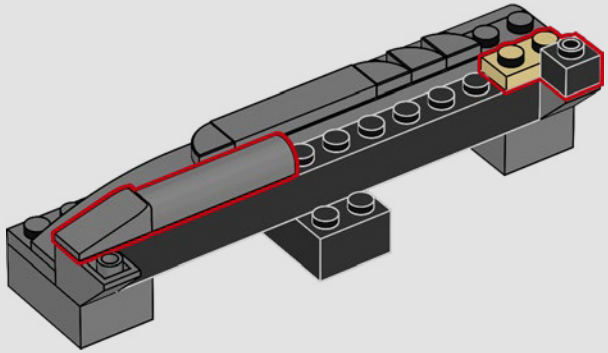

689

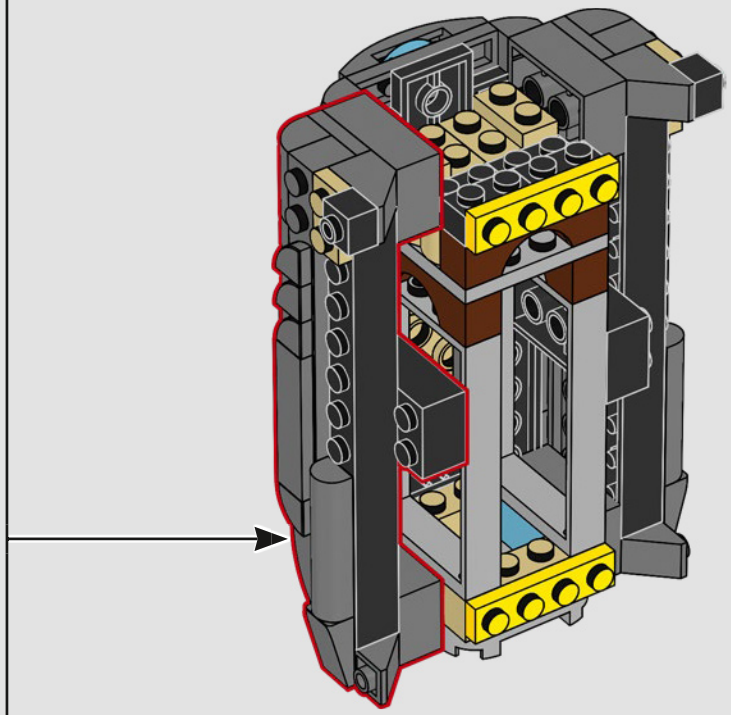

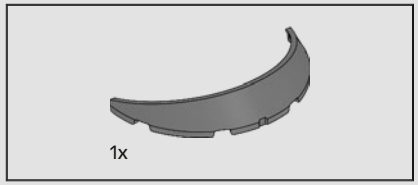


690

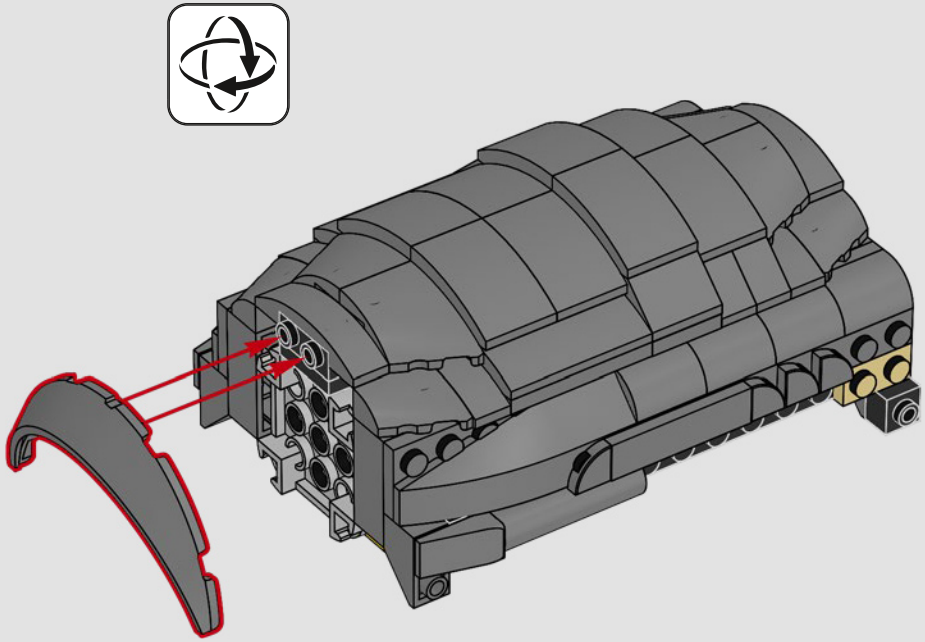

691

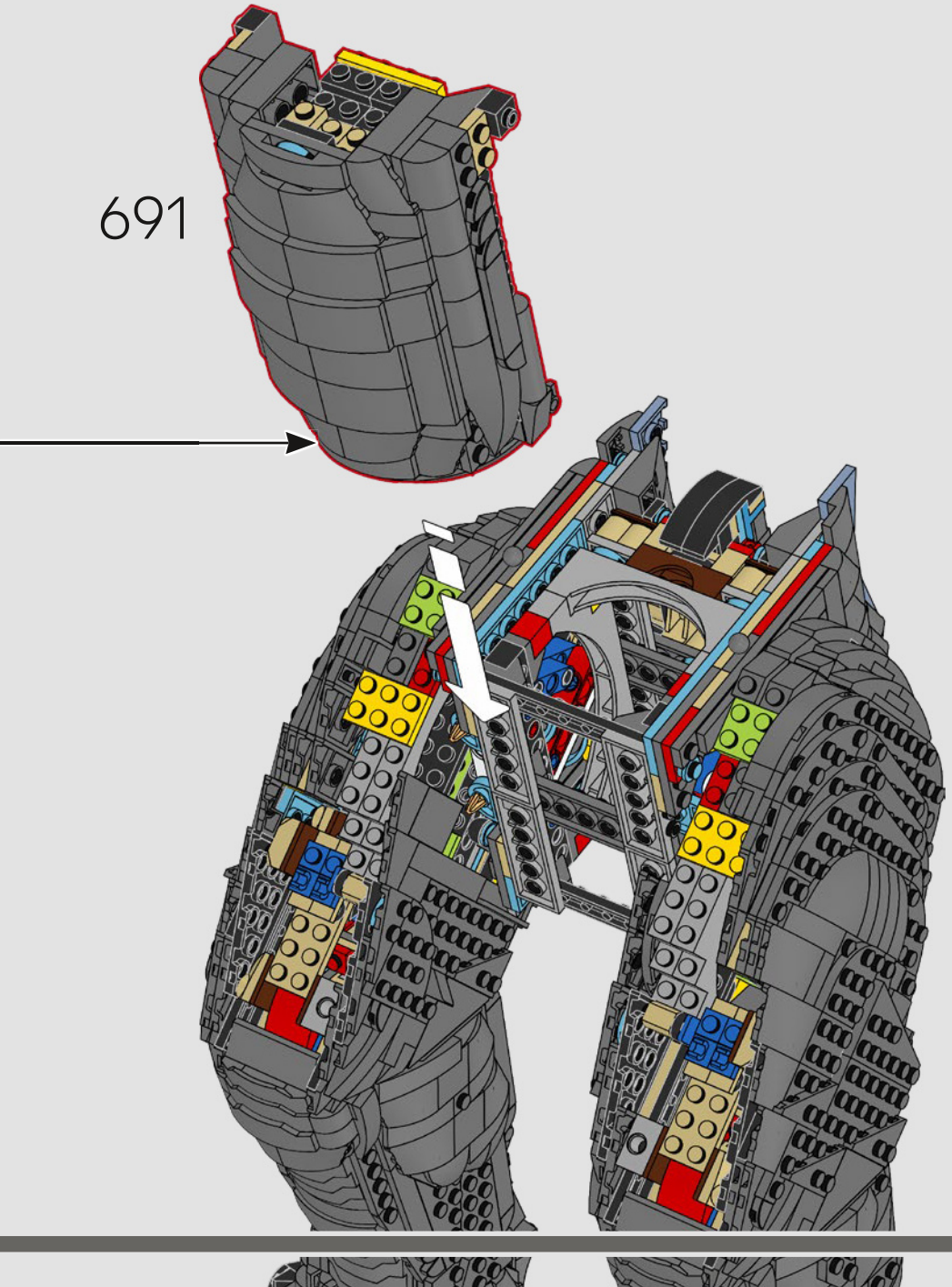

692

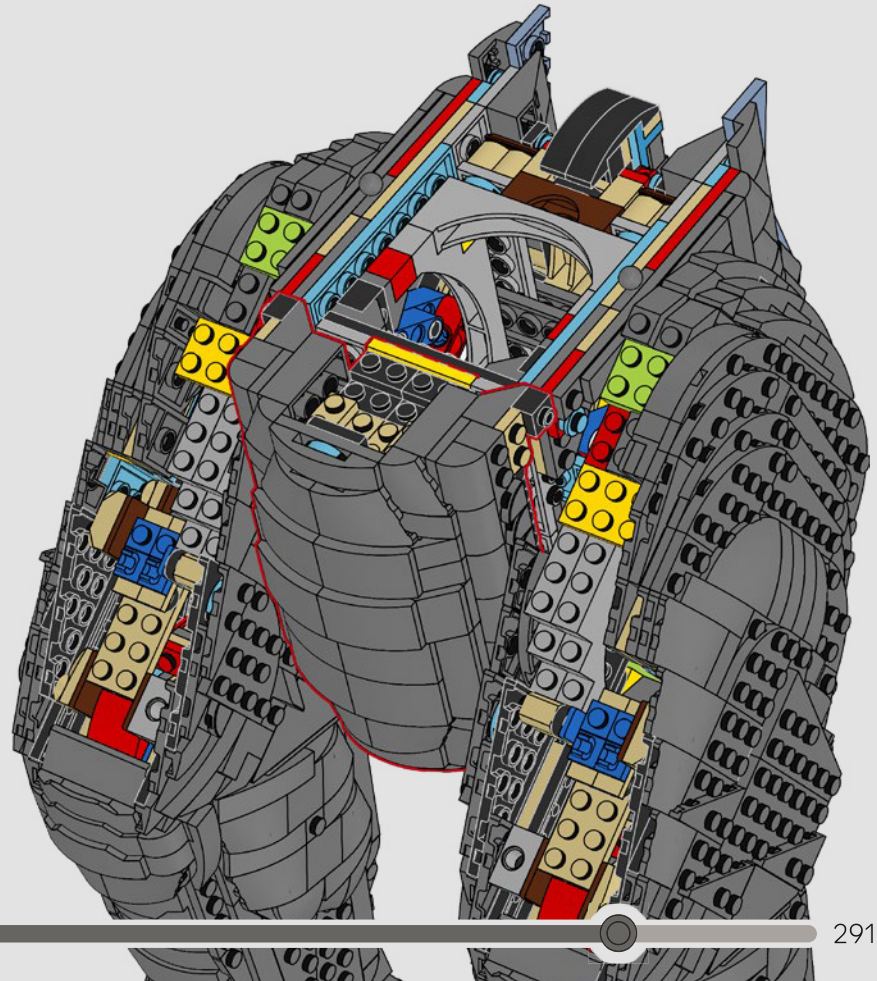

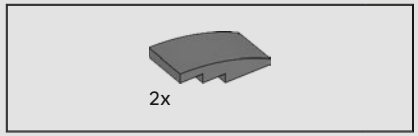


693

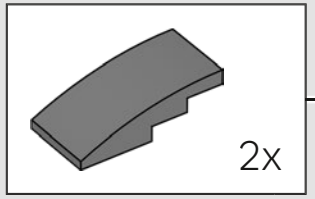

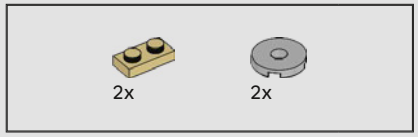


694

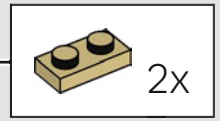


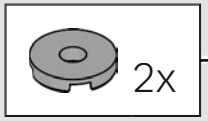




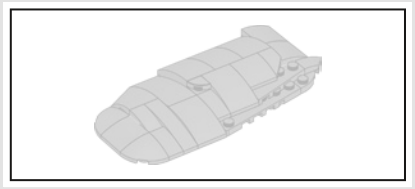

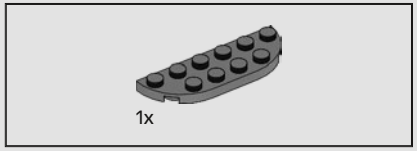


695

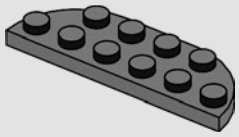

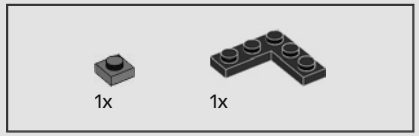


696

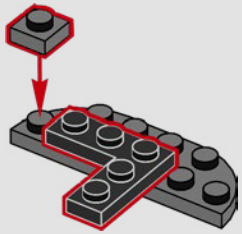

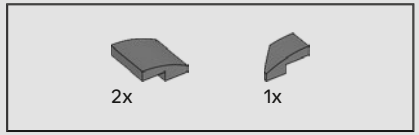


697

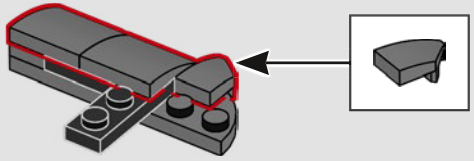

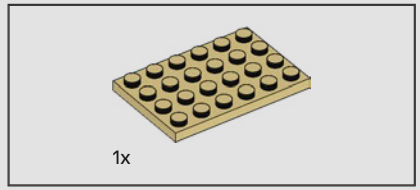


698

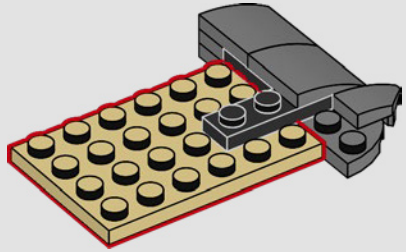

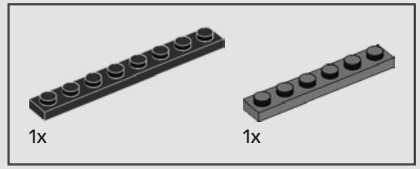


699

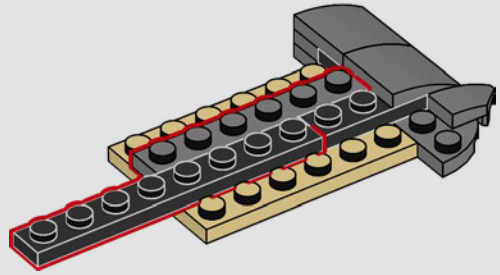

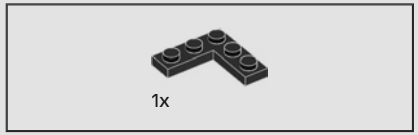


700

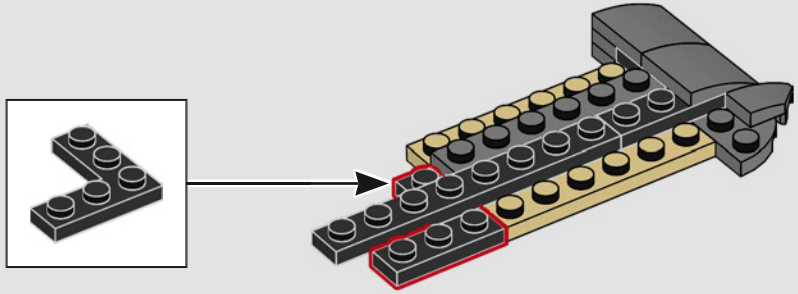

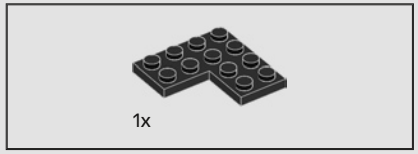


701

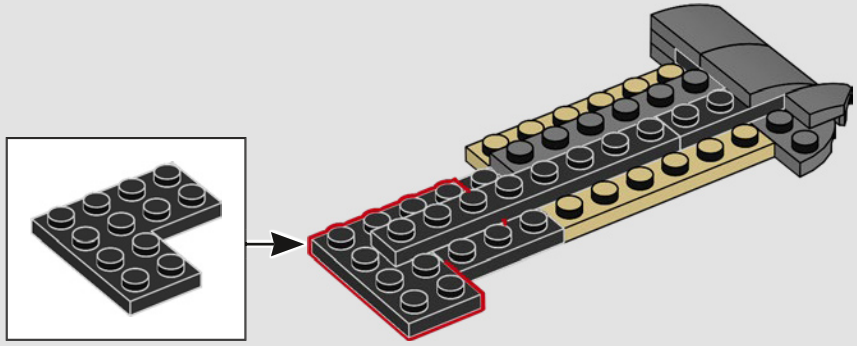

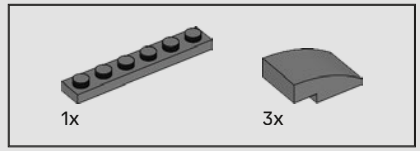


702

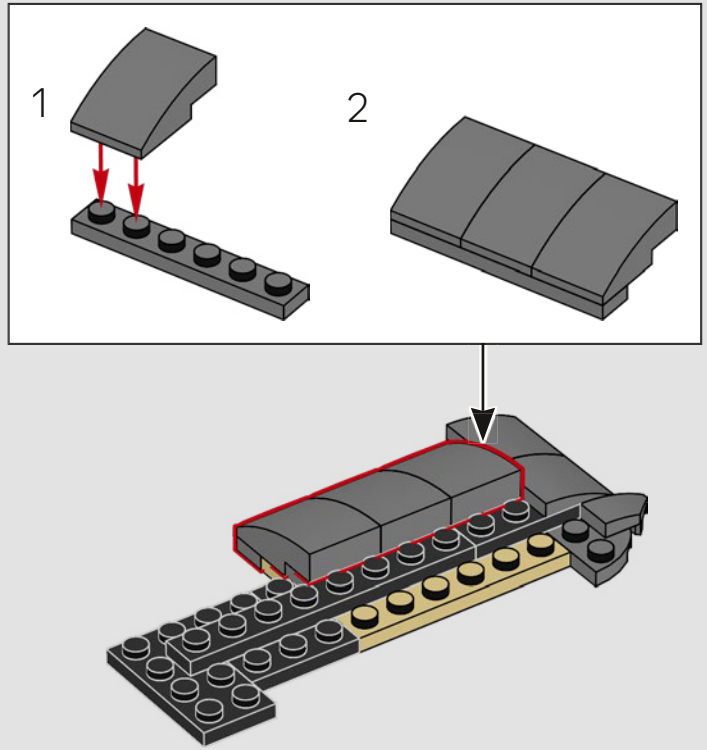

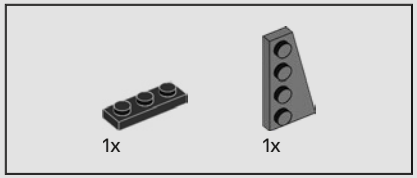


703

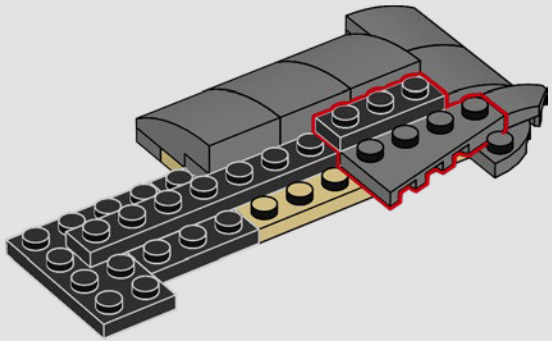

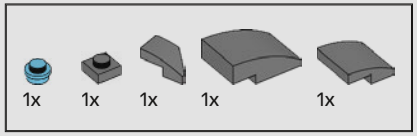


704

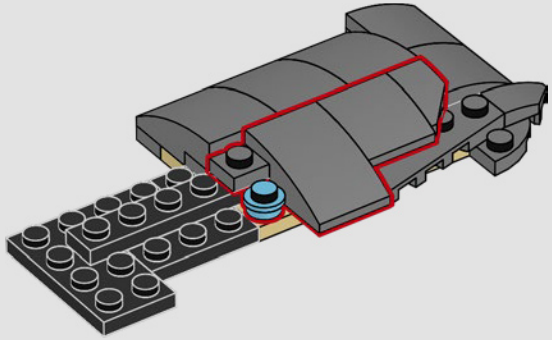

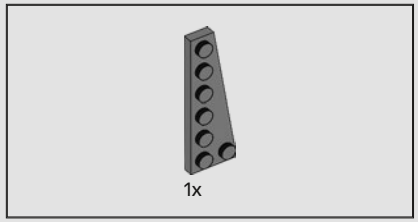


705

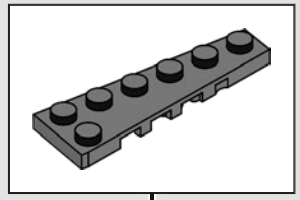

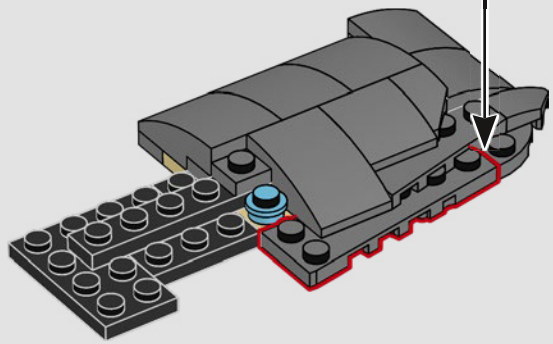

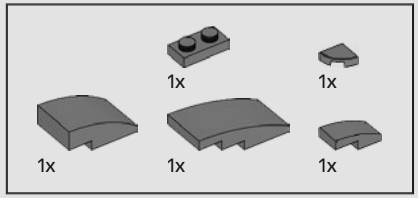


706

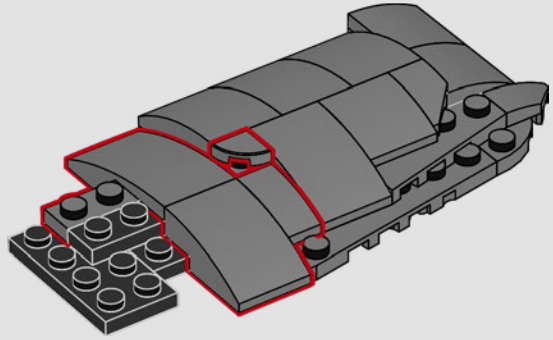

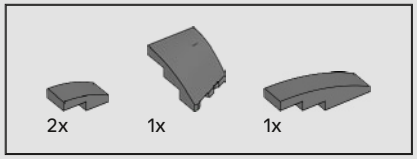


# 707

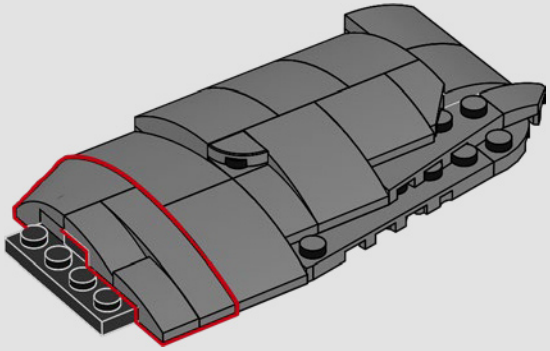

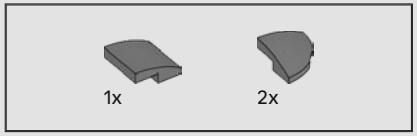


# 708

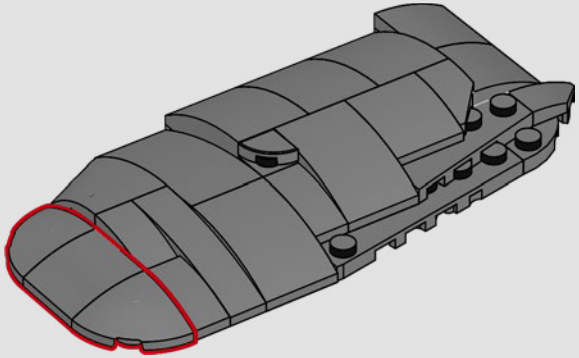




# 709

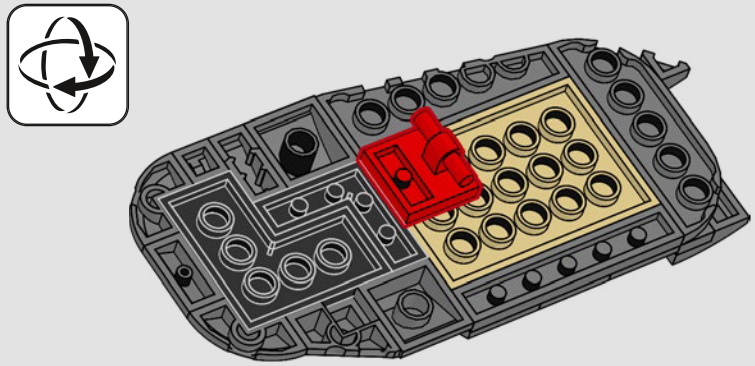

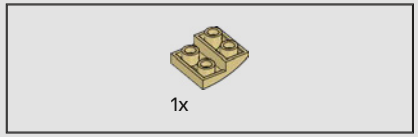


# 710

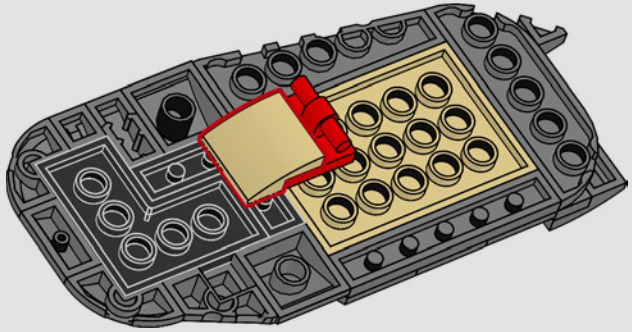

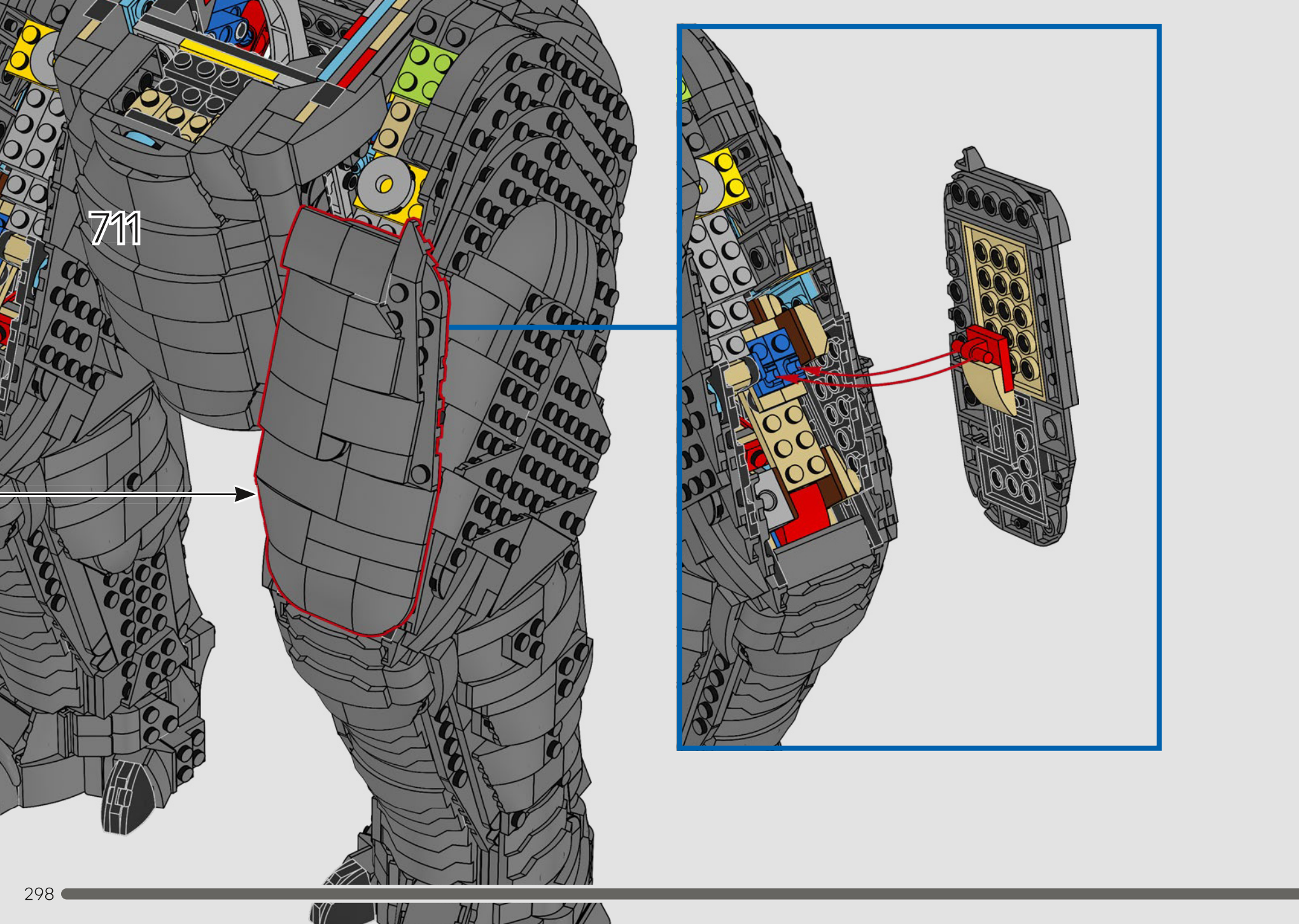
711

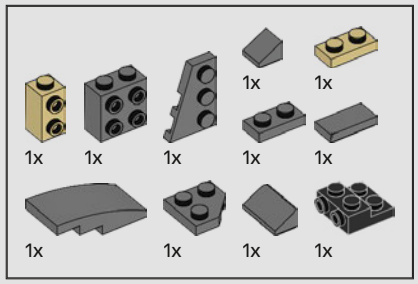


712

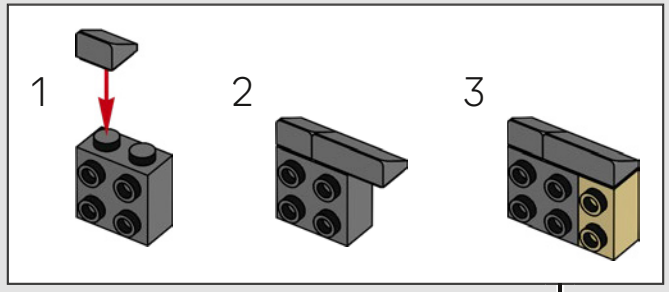


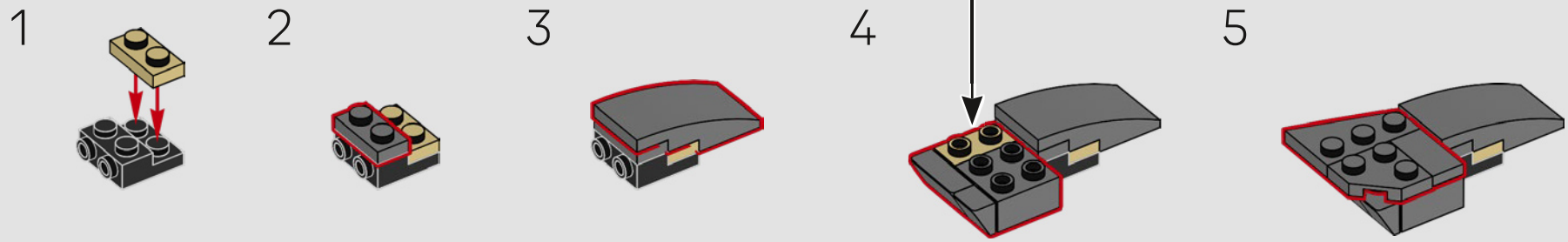

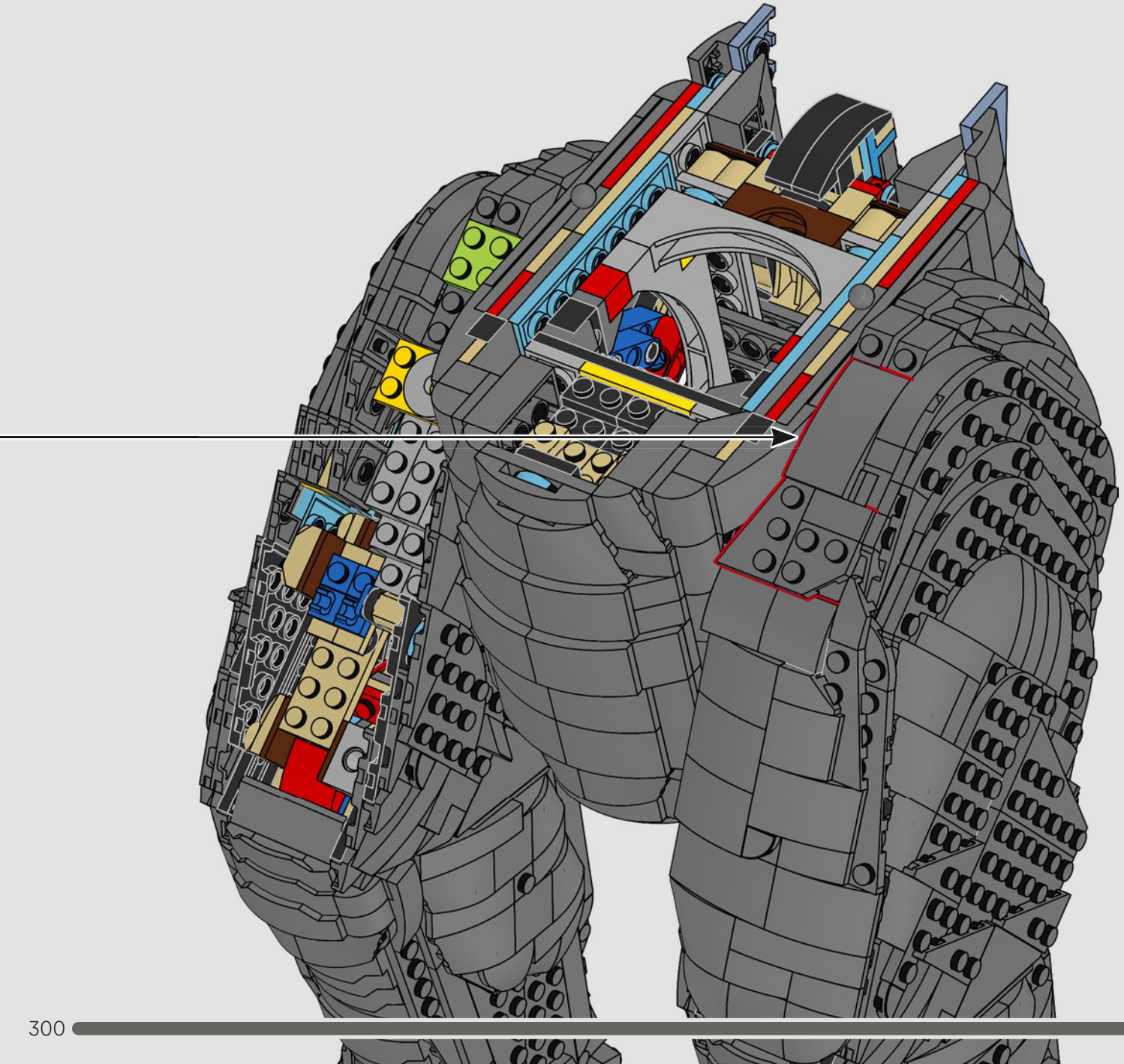

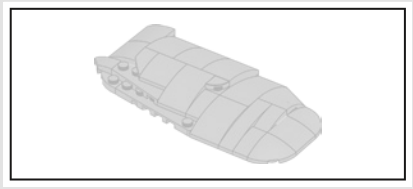

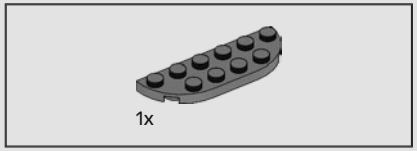


713

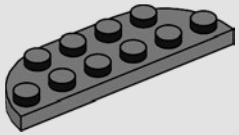

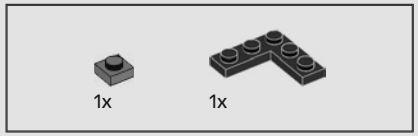


714

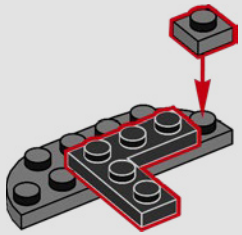

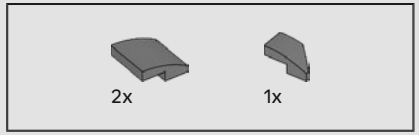


715

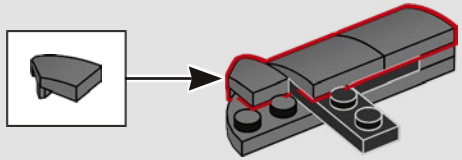

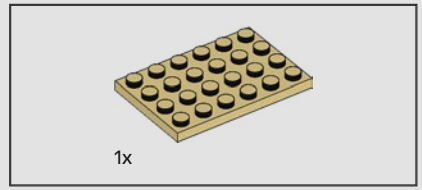


716

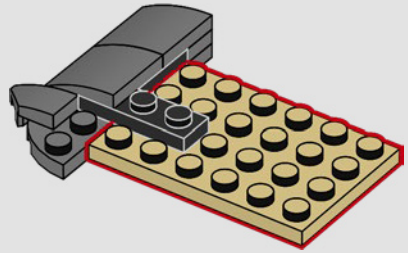

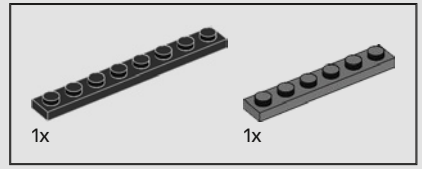


717

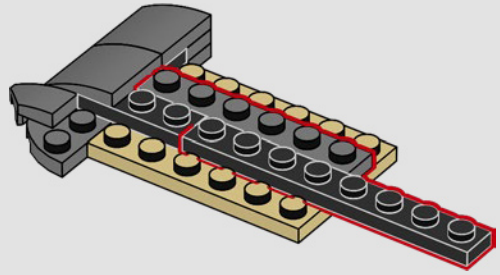

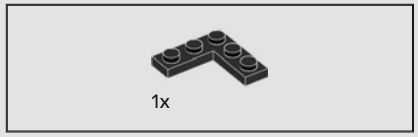


718

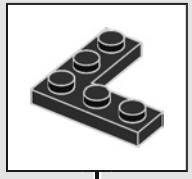

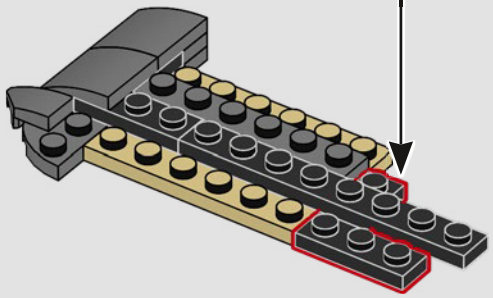

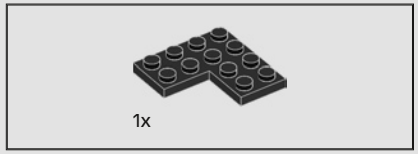


719

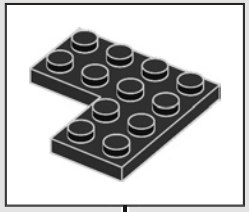

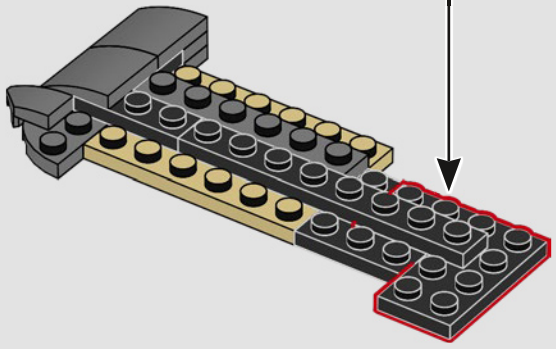

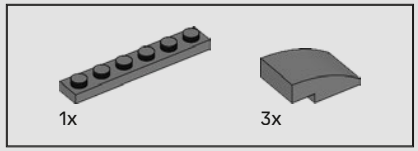


720

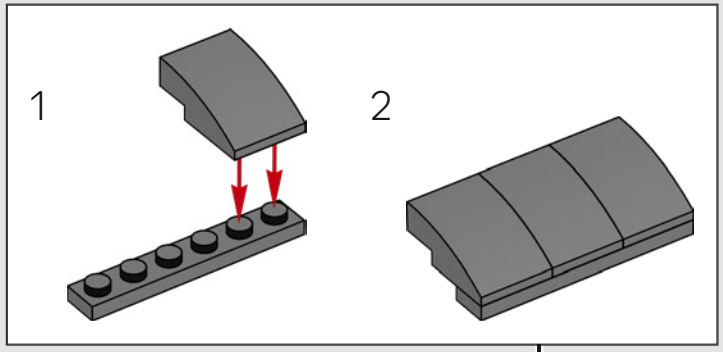


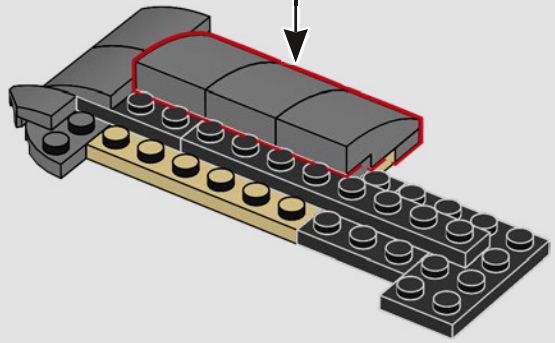

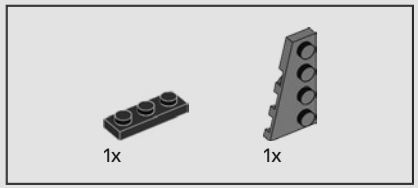


721

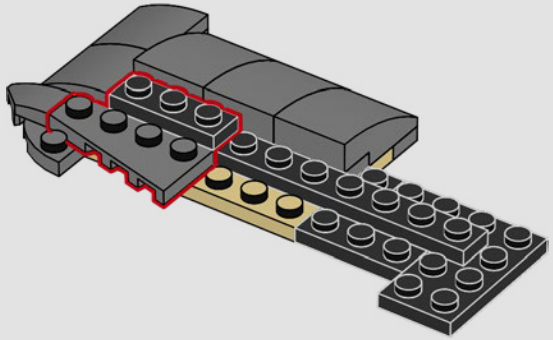

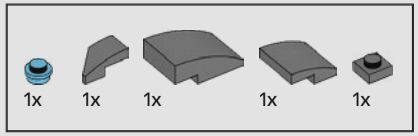


722

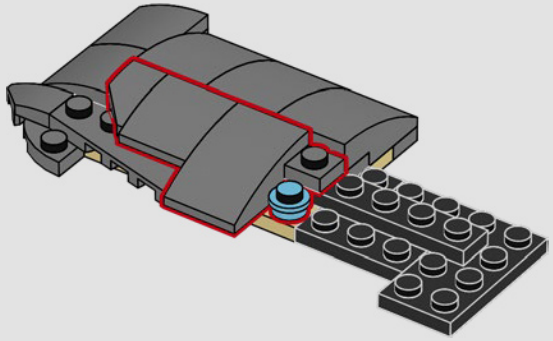

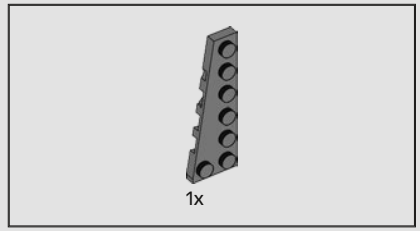


723

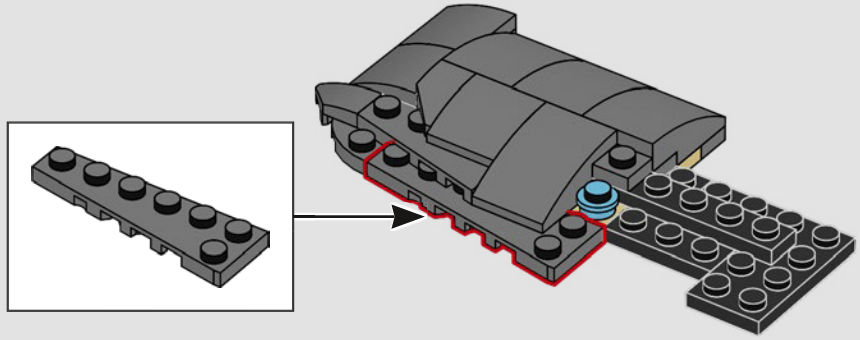

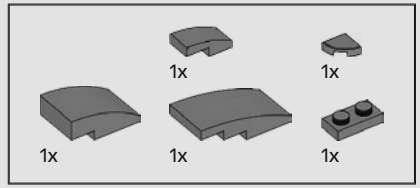


724

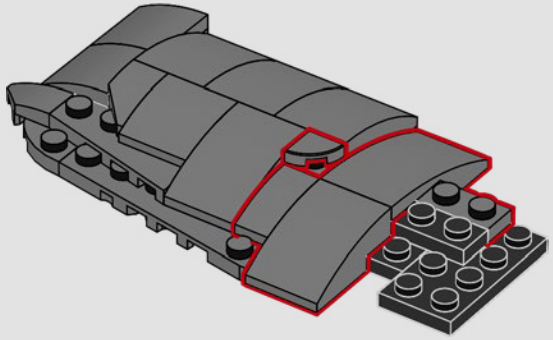

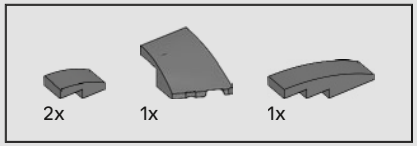


725

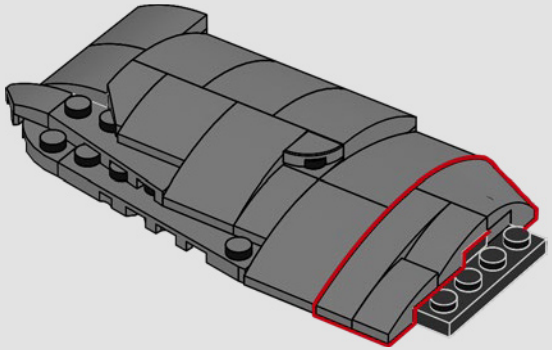

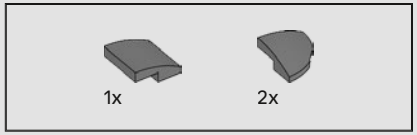


726

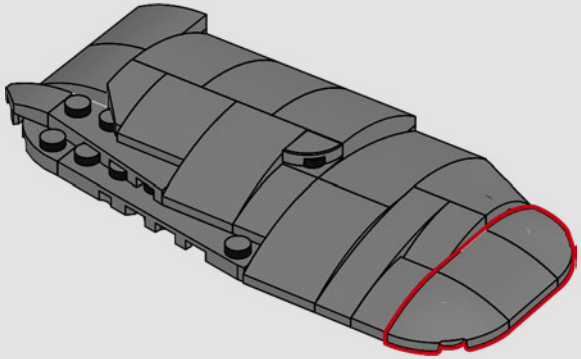




727

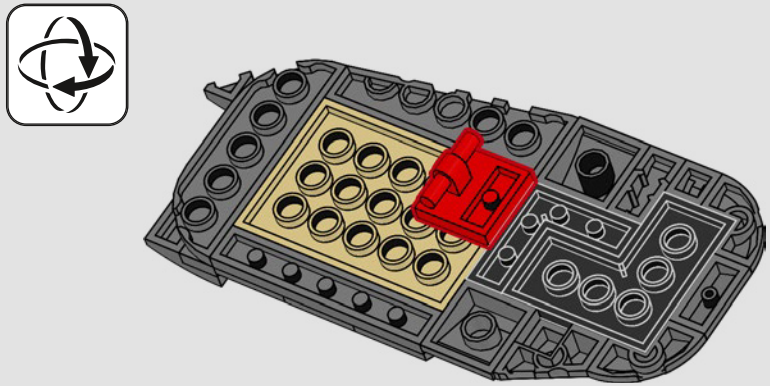

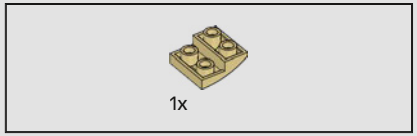


728

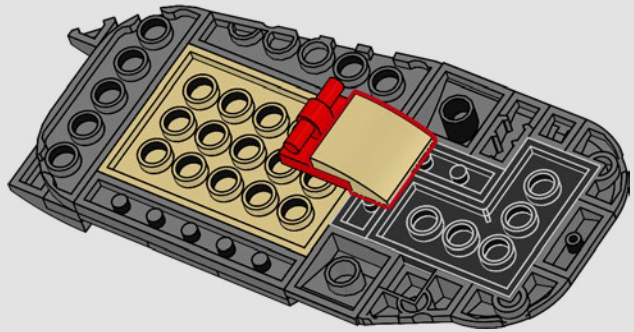

729

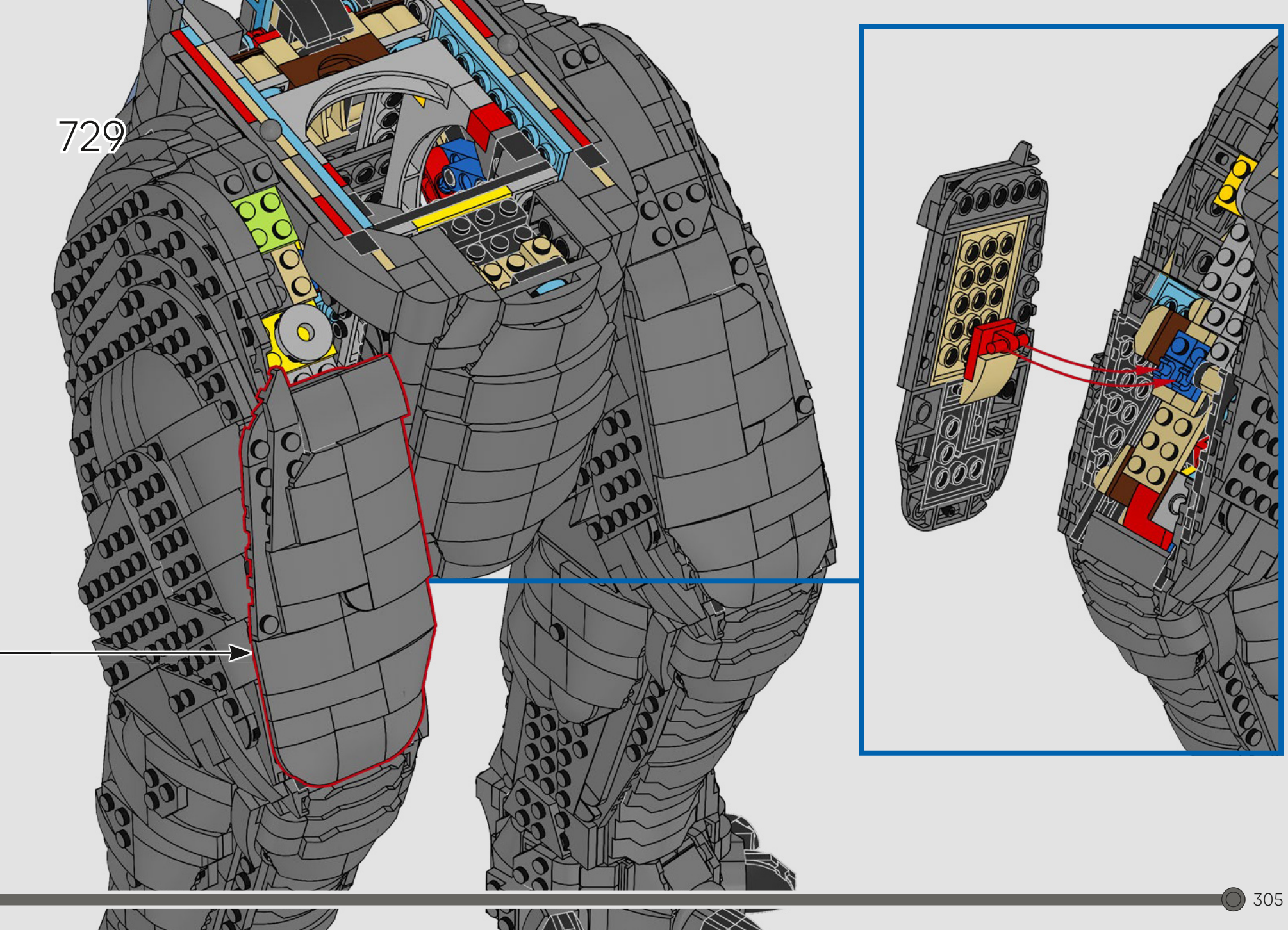

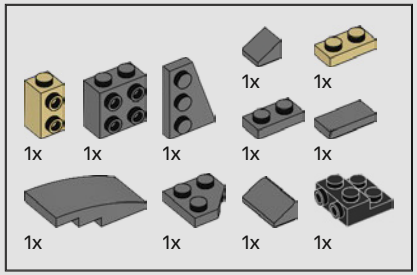


730

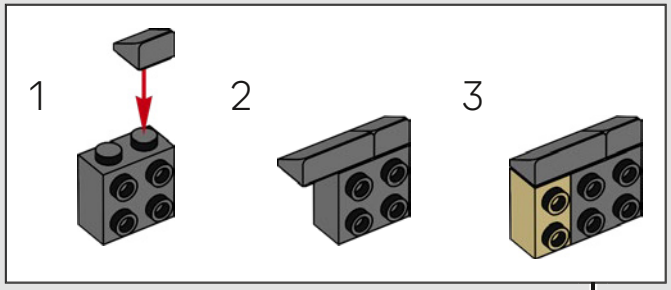


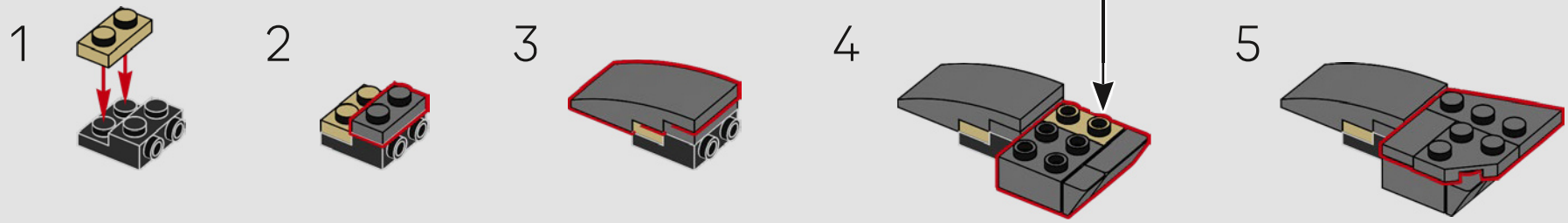

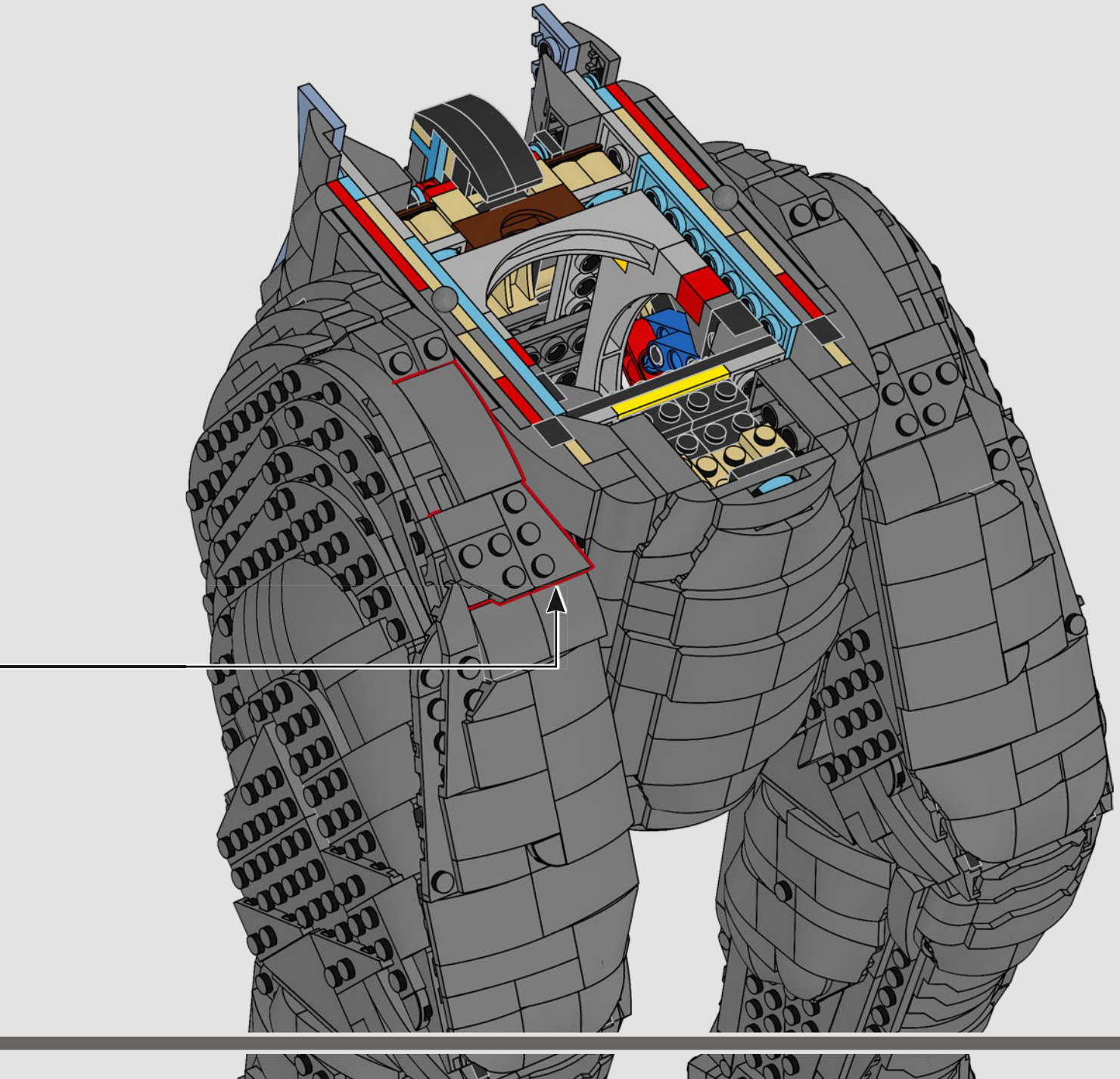

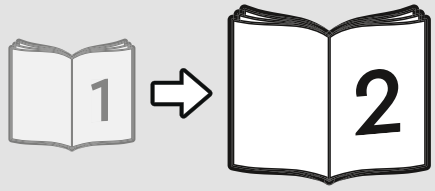
1
2



LEGO and the LEGO logo are trademarks of the LEGO Group. ©2026 The LEGO Group.
TM & © 2026 Legendary. All rights reserved.
GODZILLA TM & © TOHO CO., LTD.
MONSTERVERSE TM & © Legendary

6679588