LEGO NINJAGO

DRAGONS RISING

71869

4

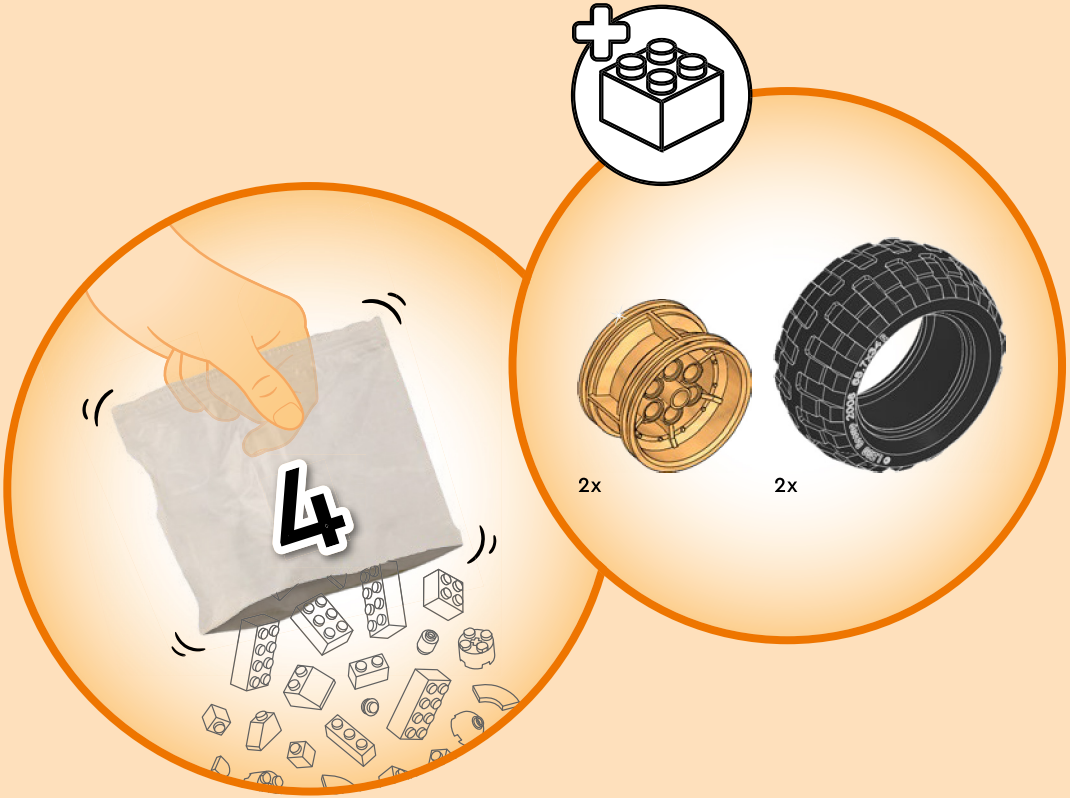
4
2x
2x

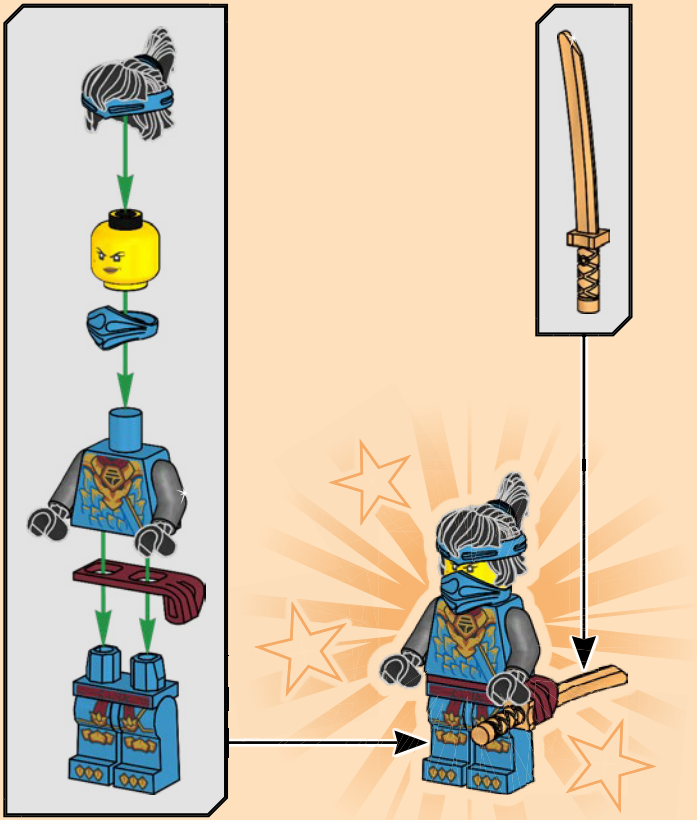

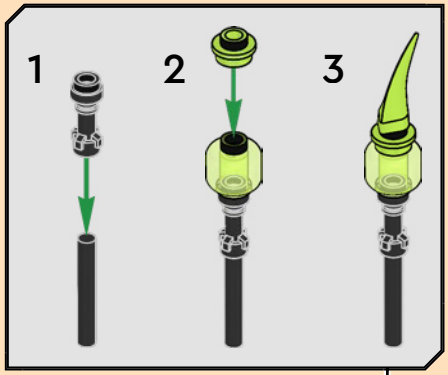
1
2
3

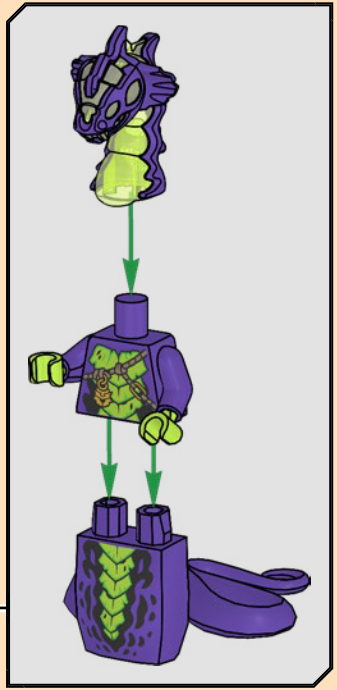

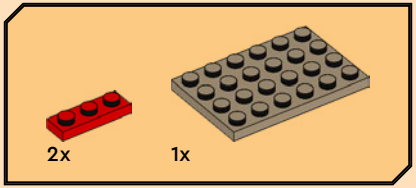

1

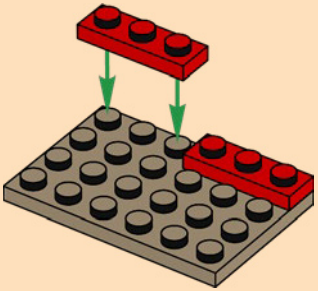

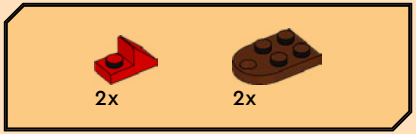

2

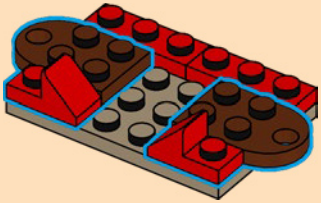

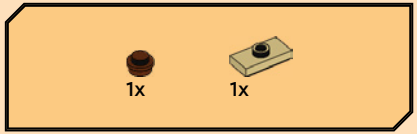

3

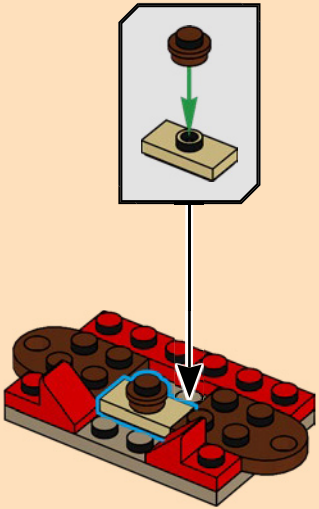

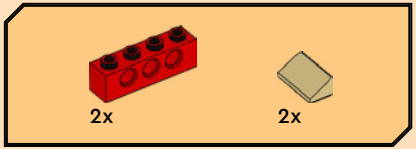

4

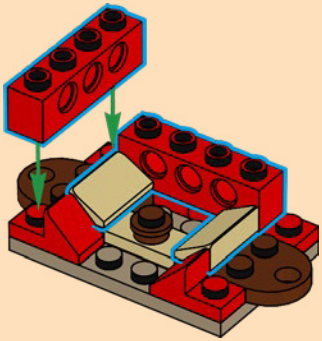

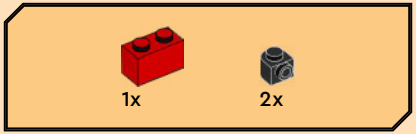

5

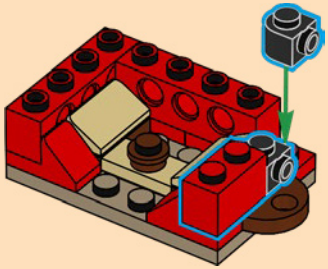

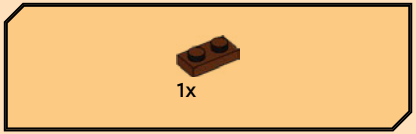

6

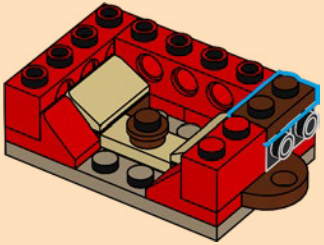

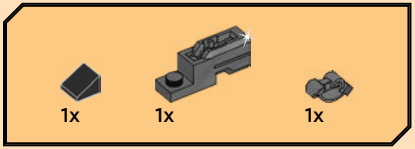

7

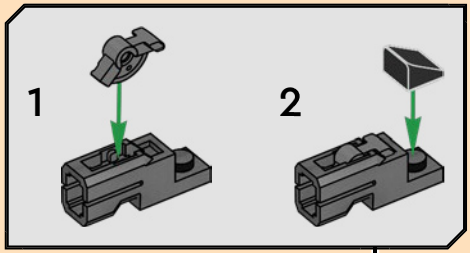

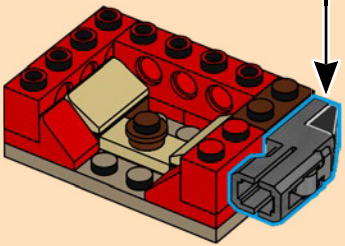

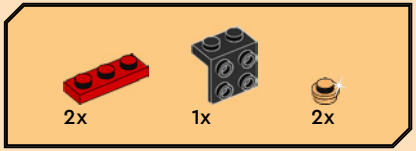

8

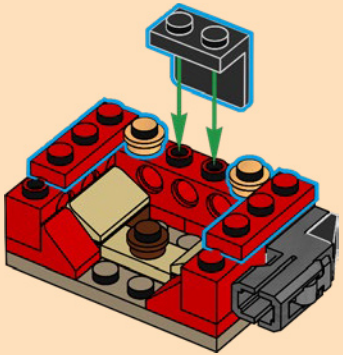

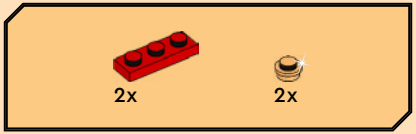

9

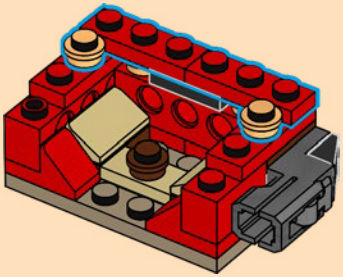

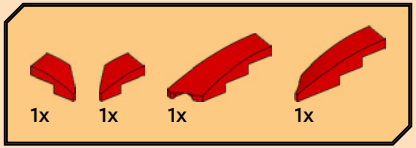

10

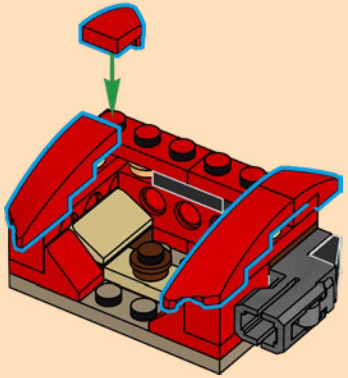

11

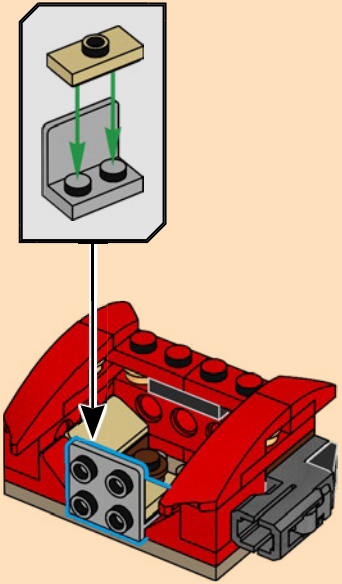

12

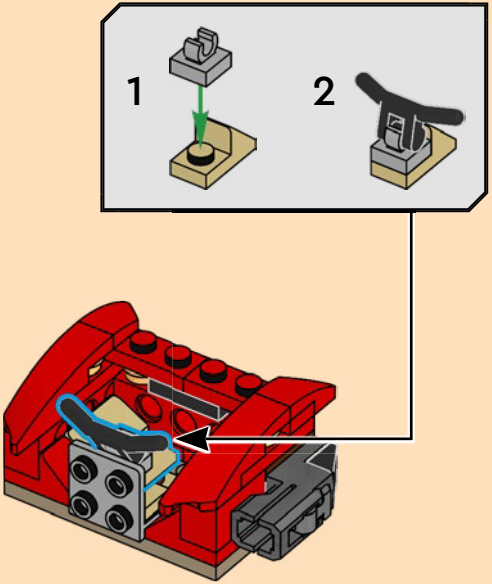

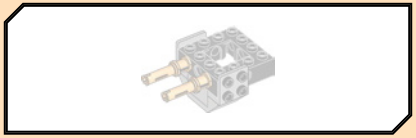

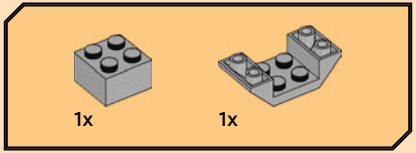

13

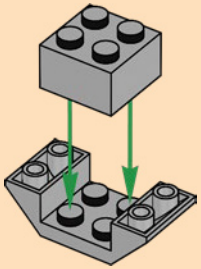

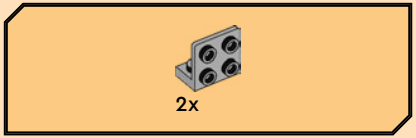

14

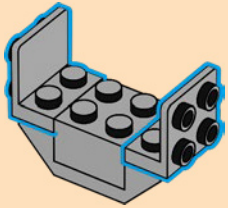

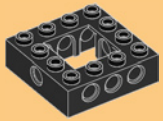

15

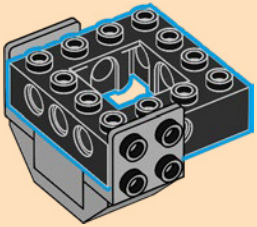

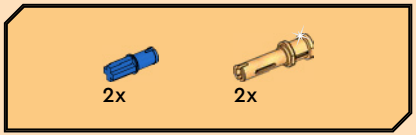

16

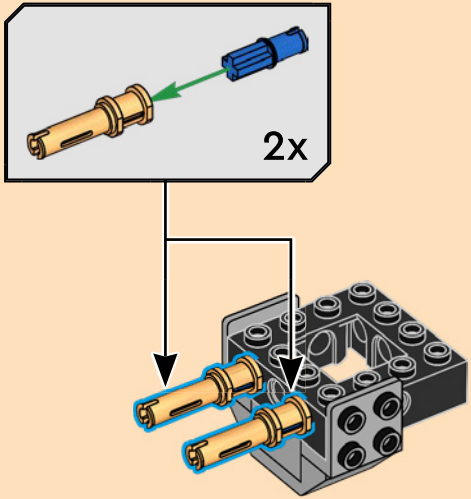

17

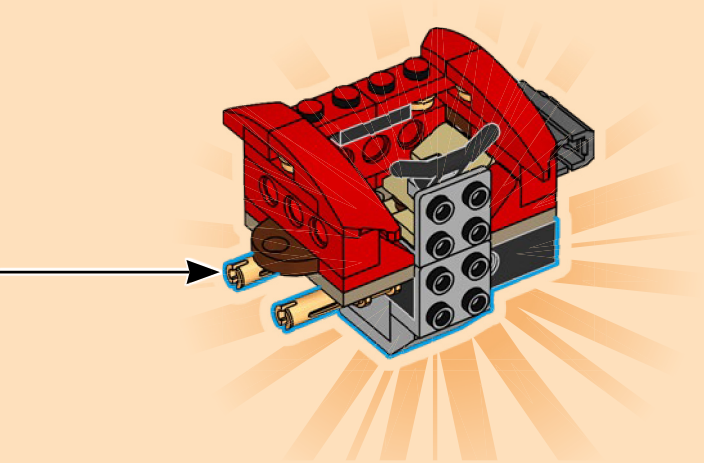

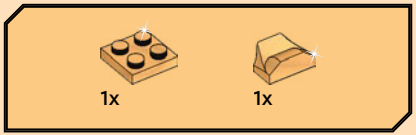

18

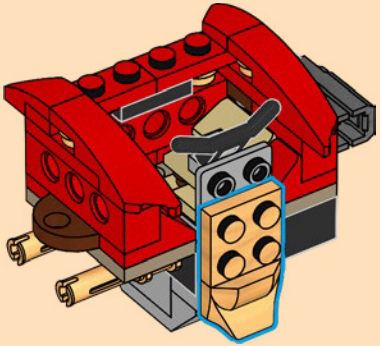

19

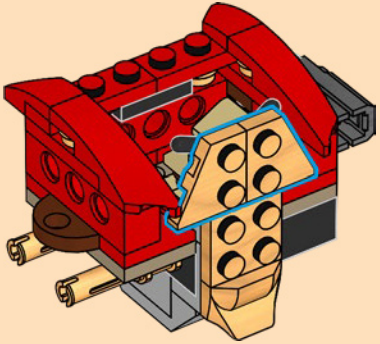

20

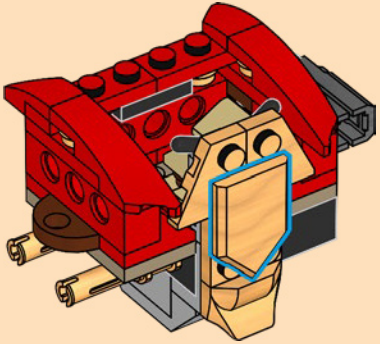

21

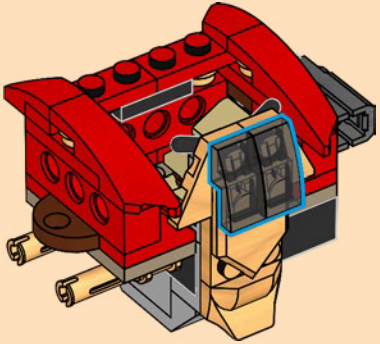

22

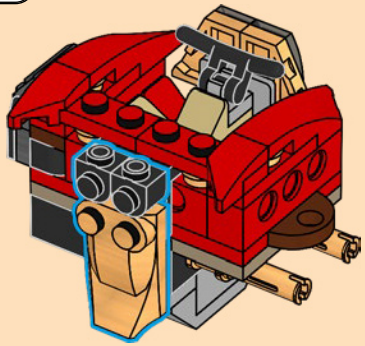

2x

23

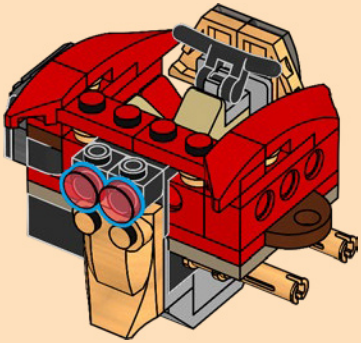

1x

24

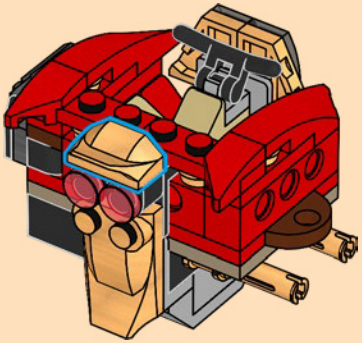

1x

25

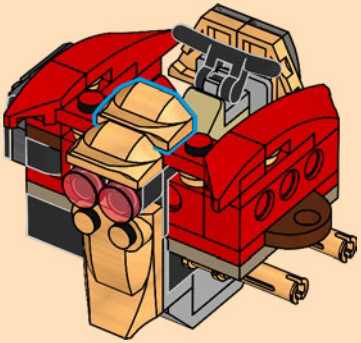

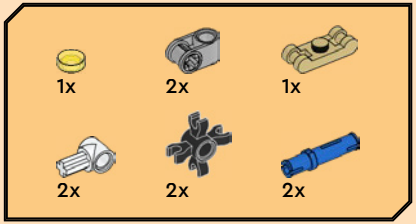

26

1

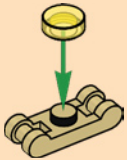

2

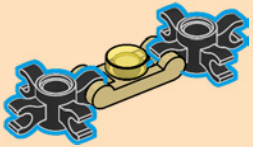

3

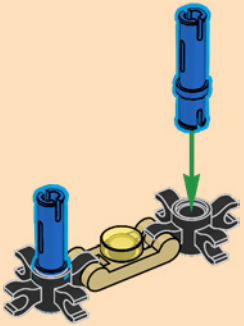

4

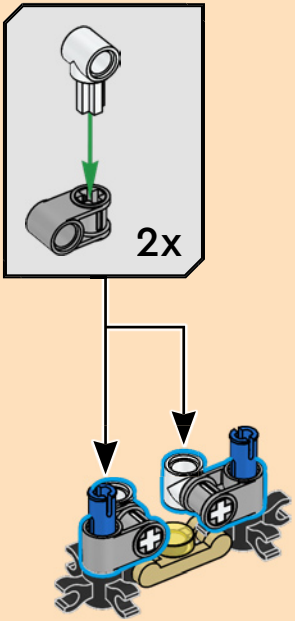

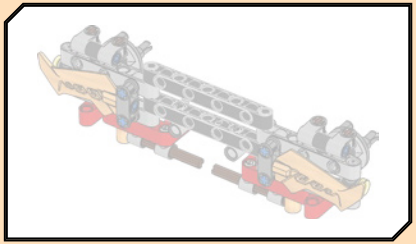

27

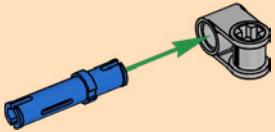

28

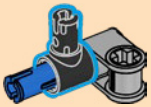

29

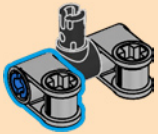

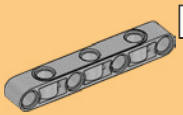

30

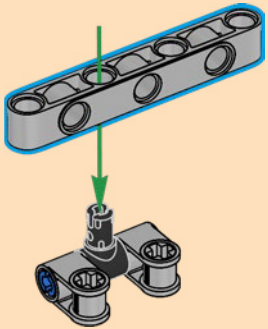

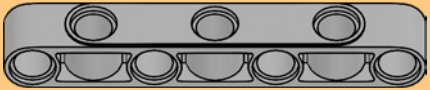

1:1

31

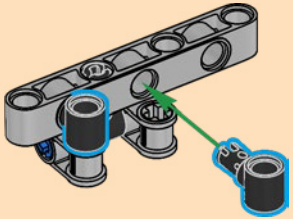

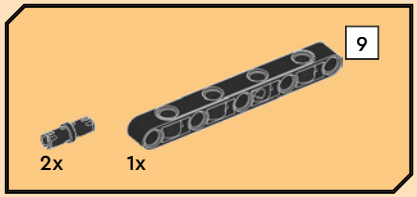

32

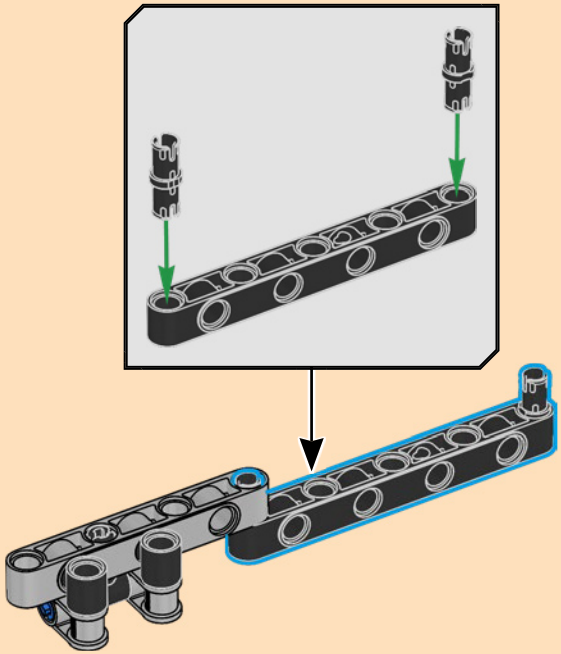

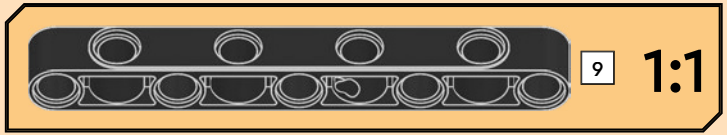

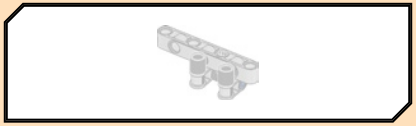

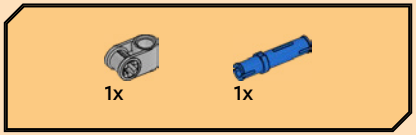

33

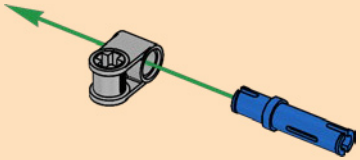

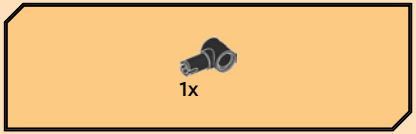

34

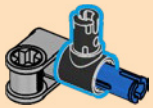

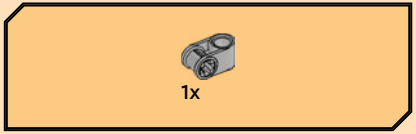

35

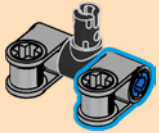

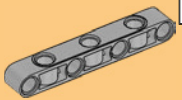

36

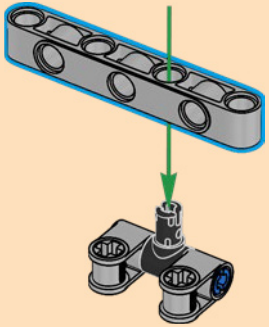

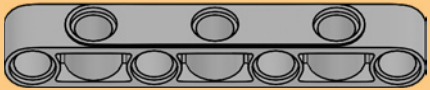

1:1

37

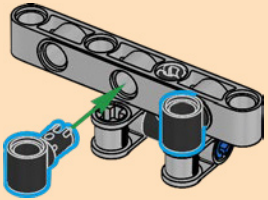

38

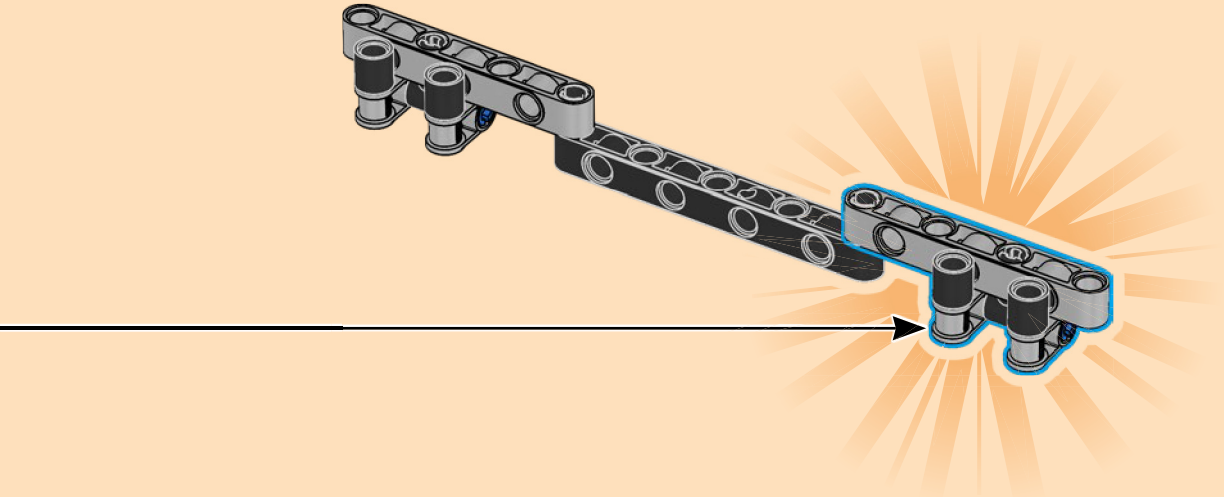

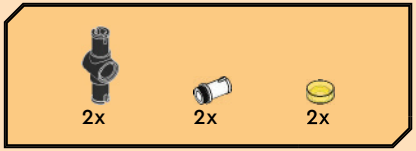

39

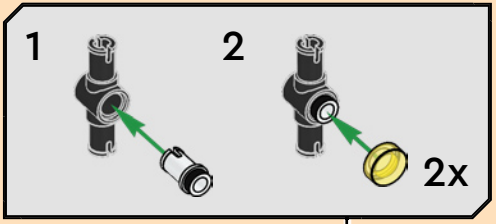

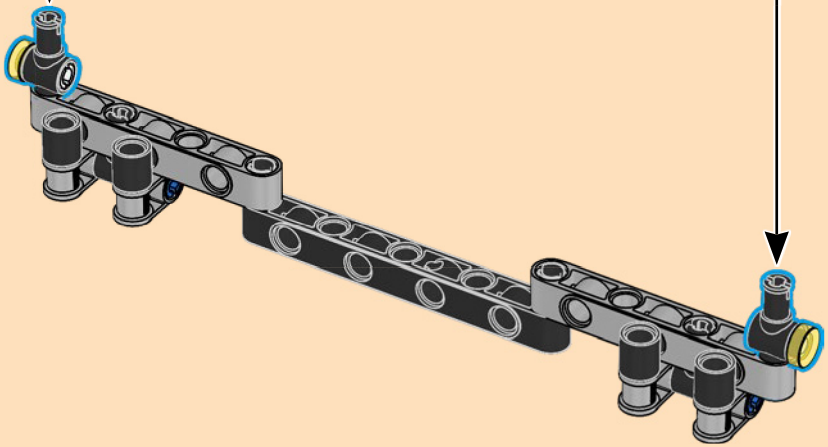

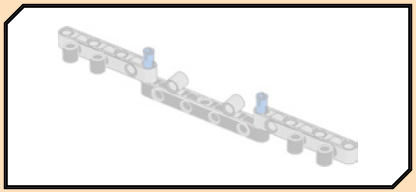

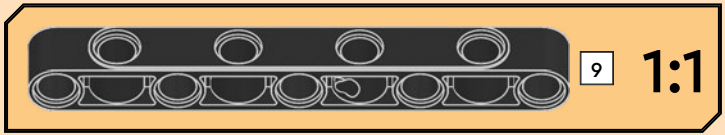

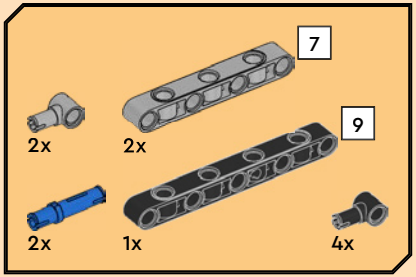

40

1

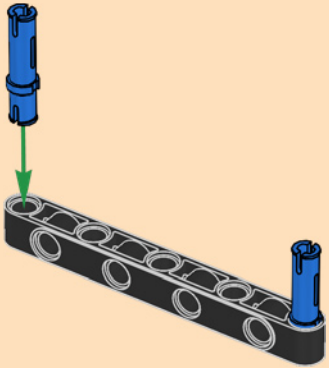

2

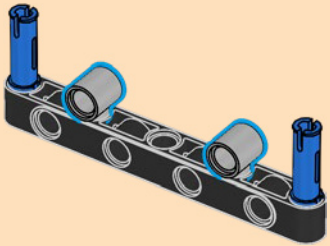

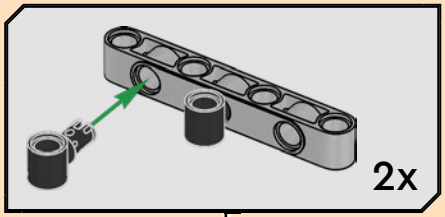

3

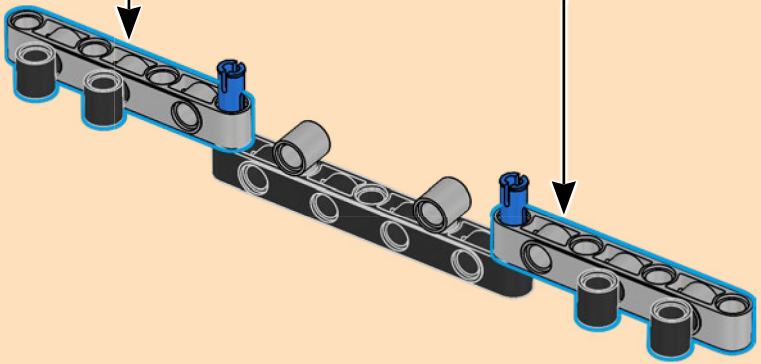

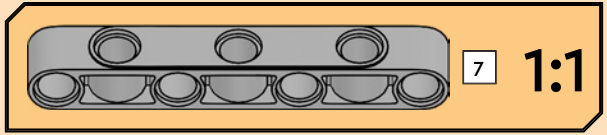

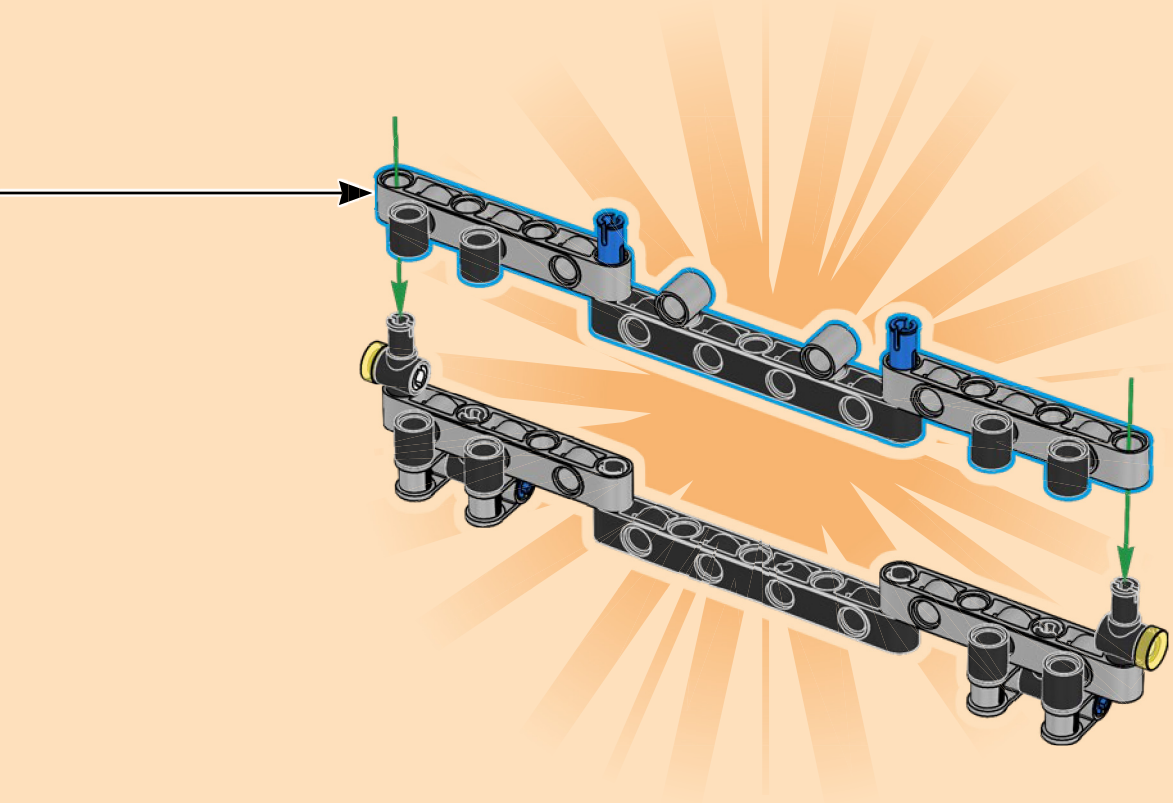

2x

41

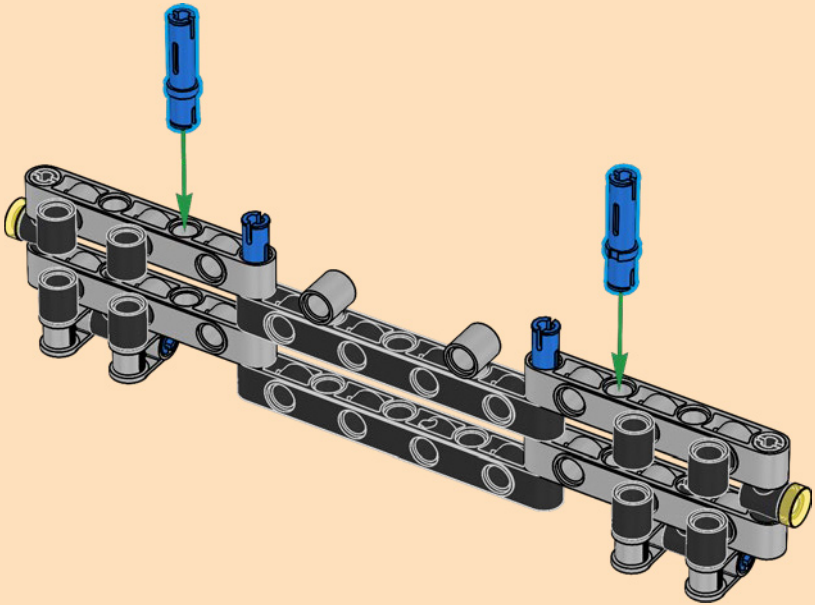

2x

42

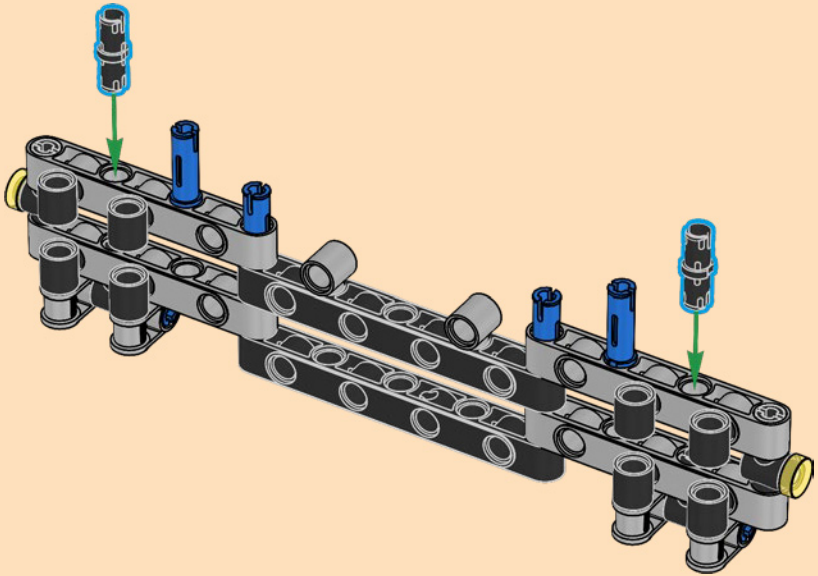

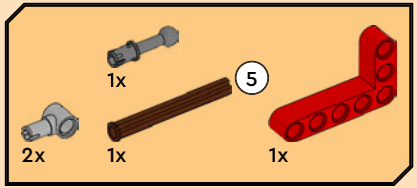

43

1

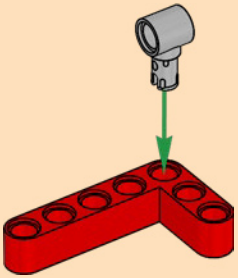

2

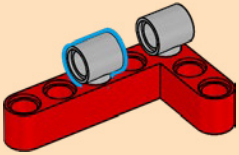

3

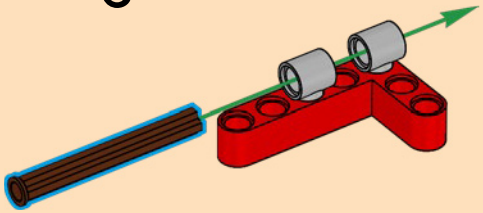

4

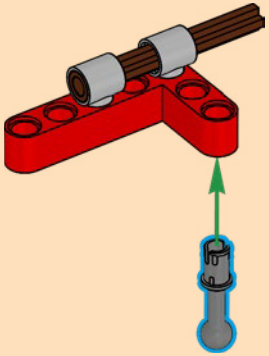

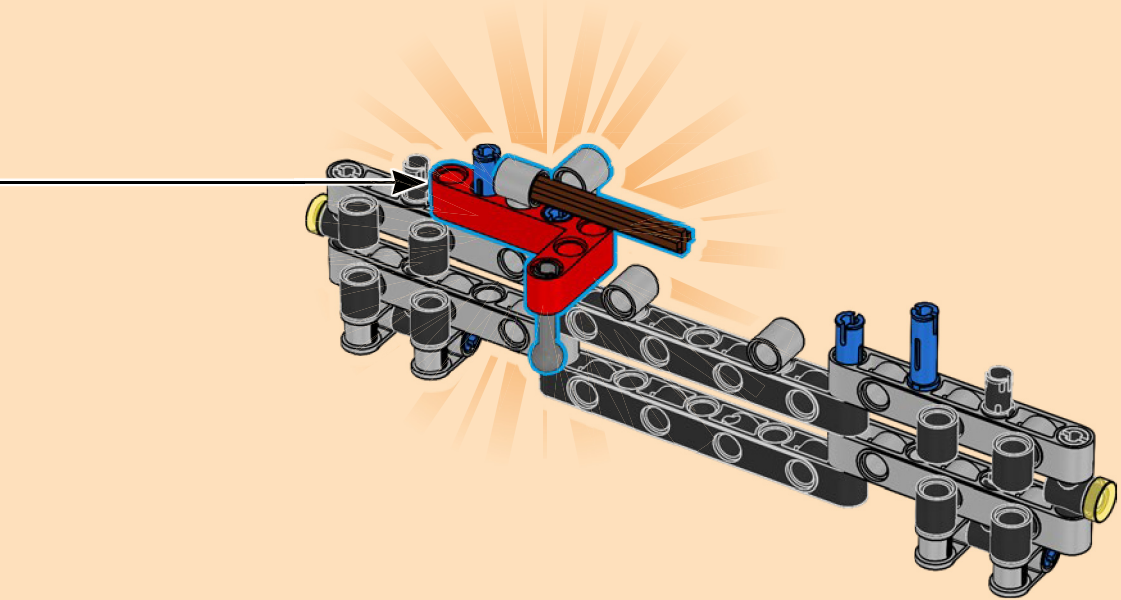

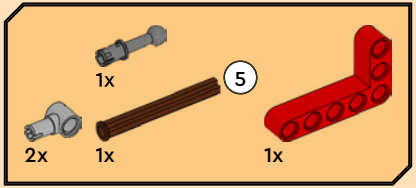

44

1

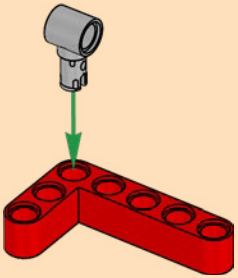

2

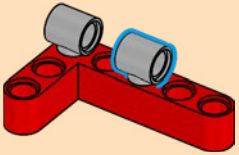

3

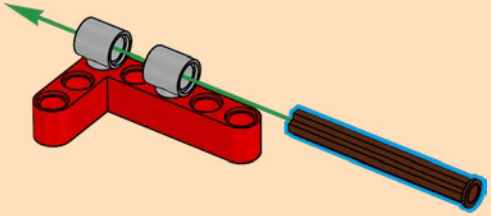

4

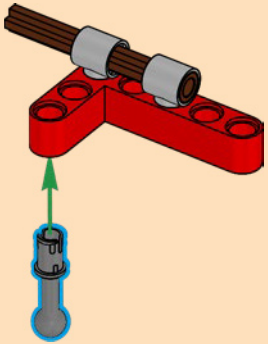

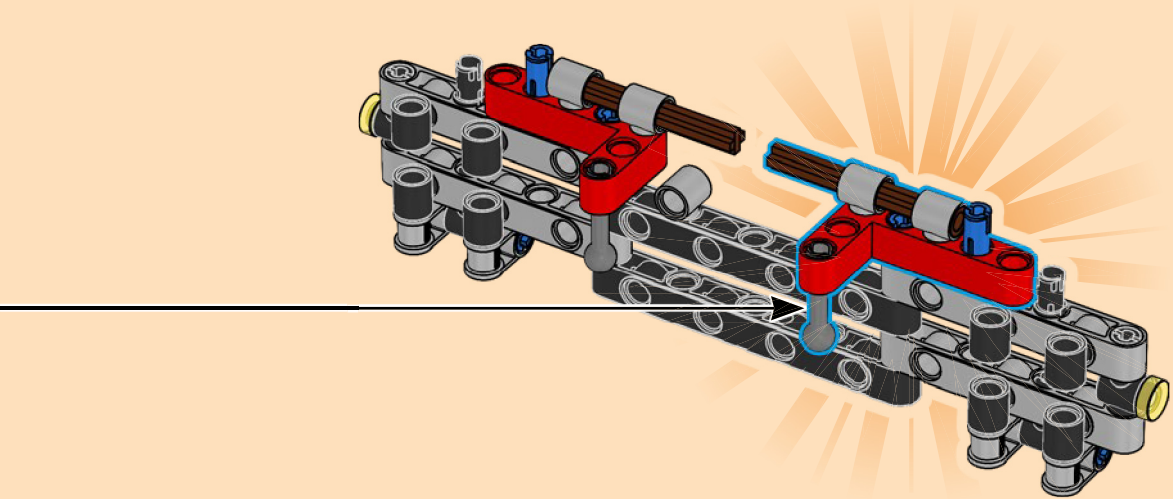

2x

45

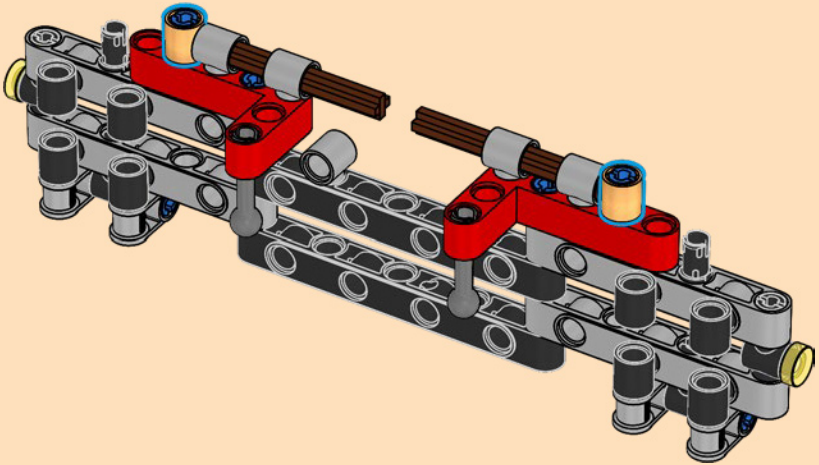

46

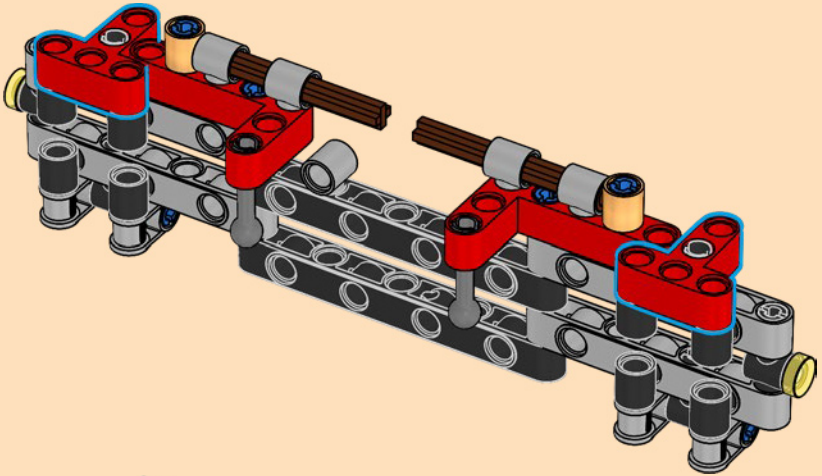

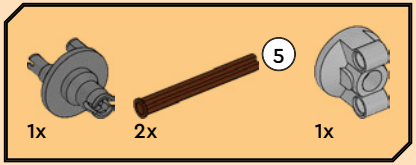

47

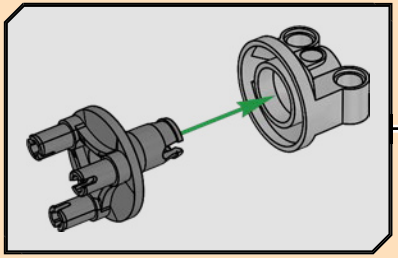

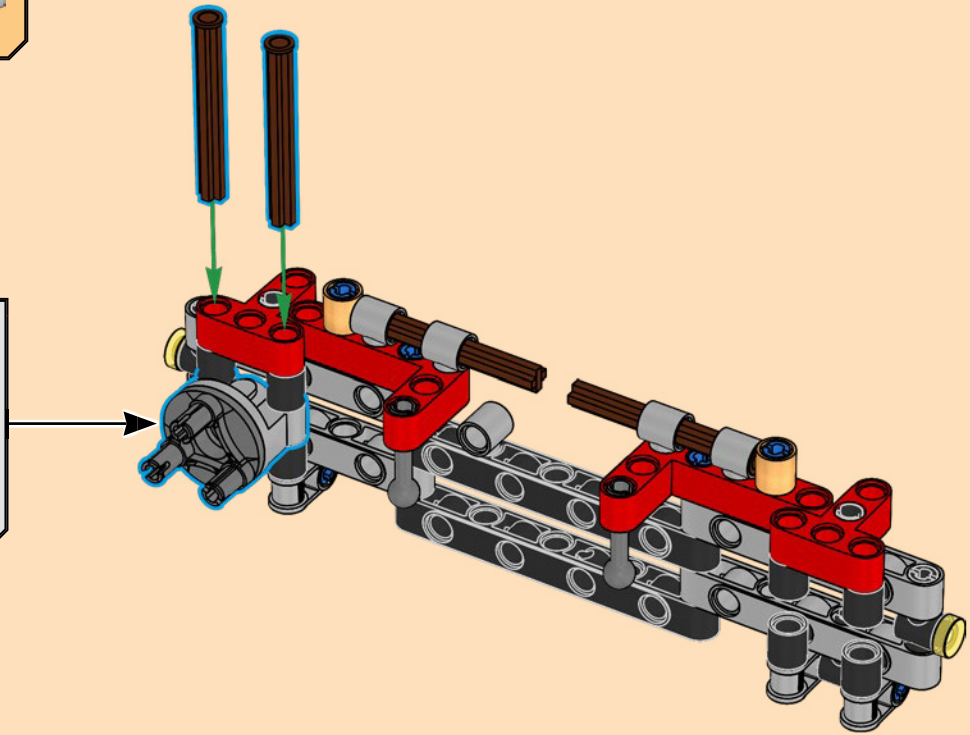

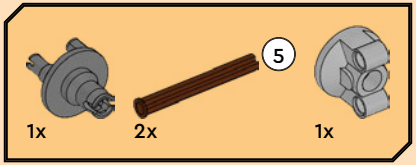

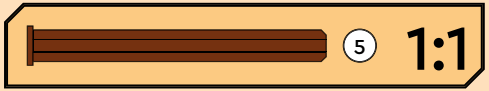

48

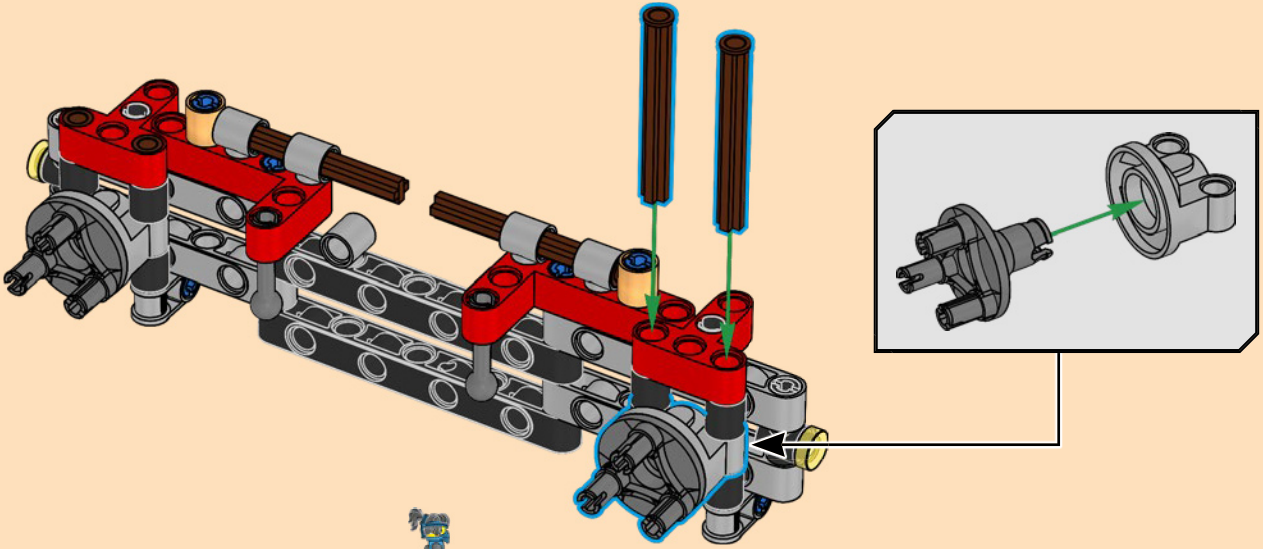

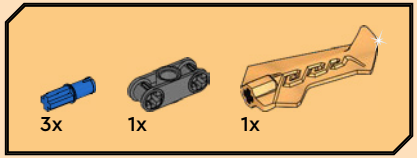

49

1

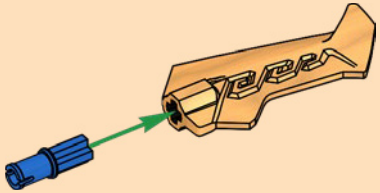

2

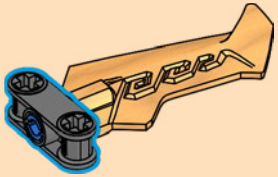

3

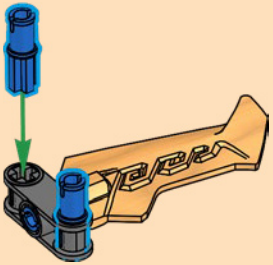

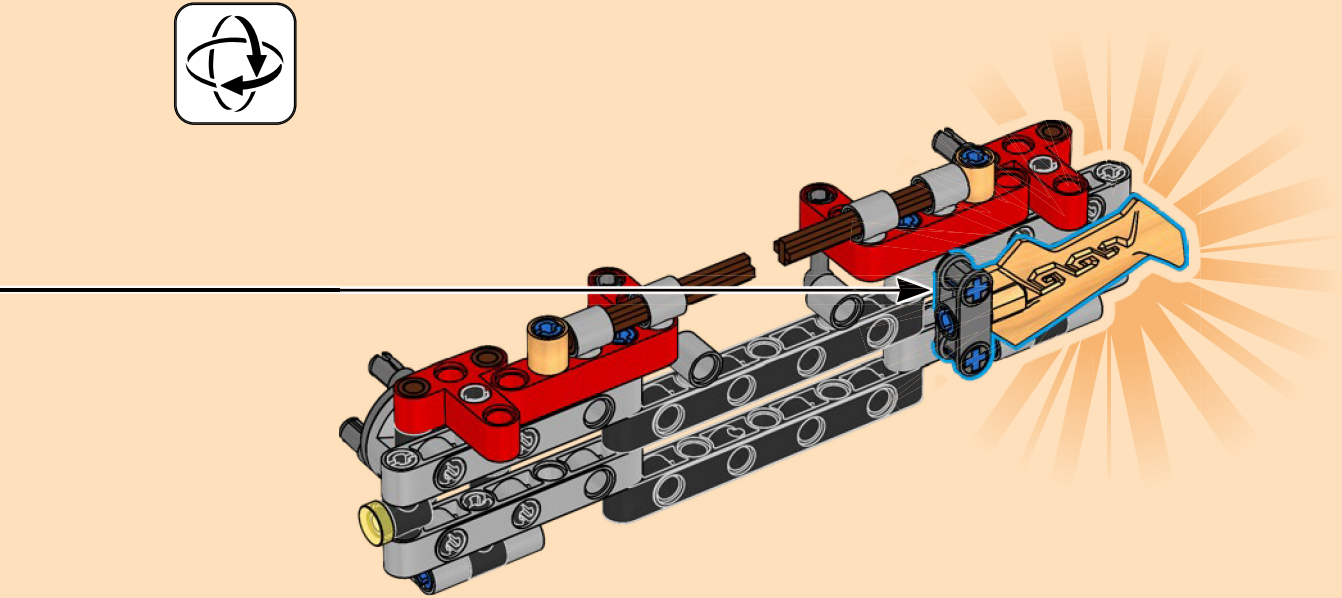

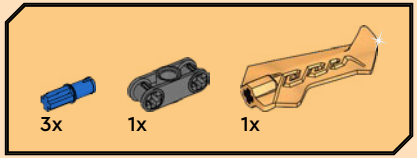

50

1

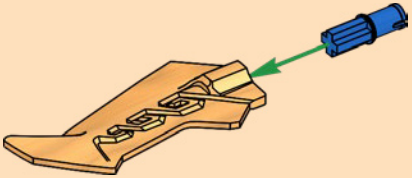

2

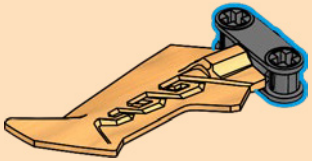

3

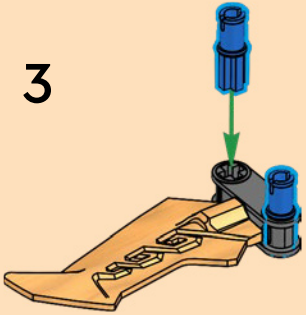

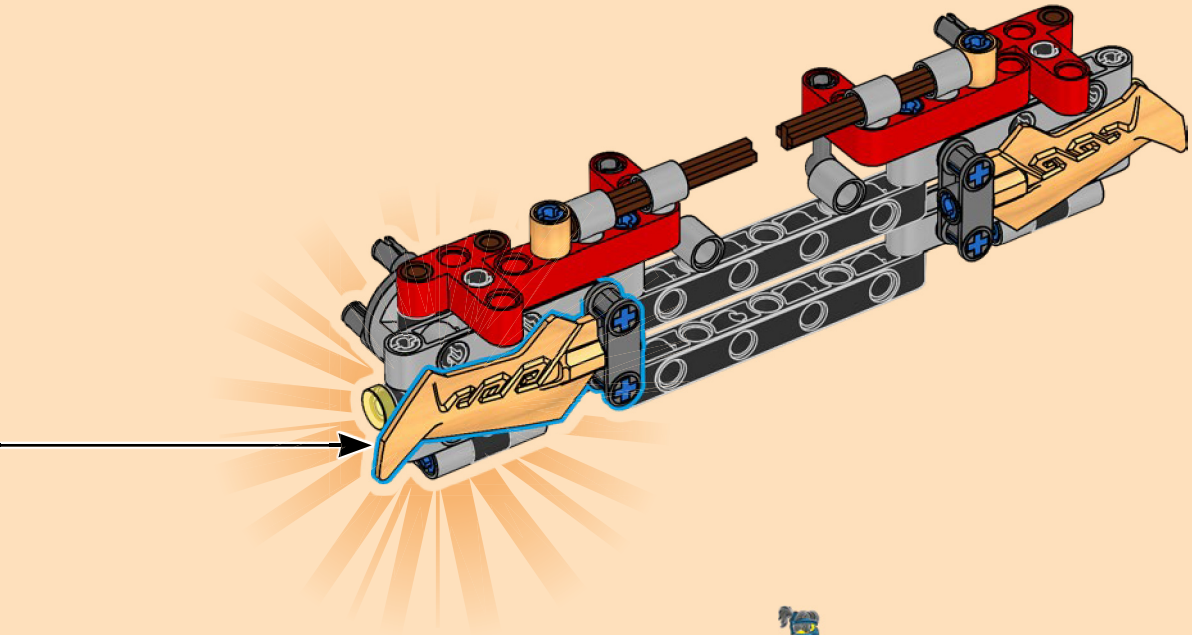

51

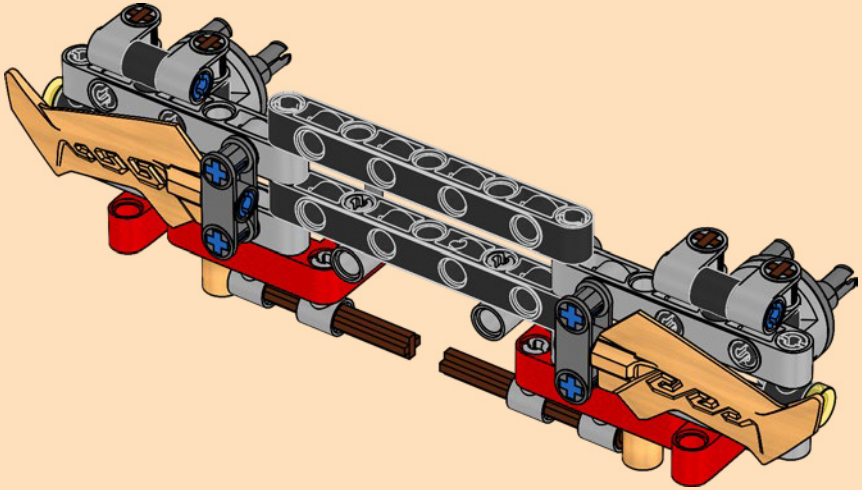

52

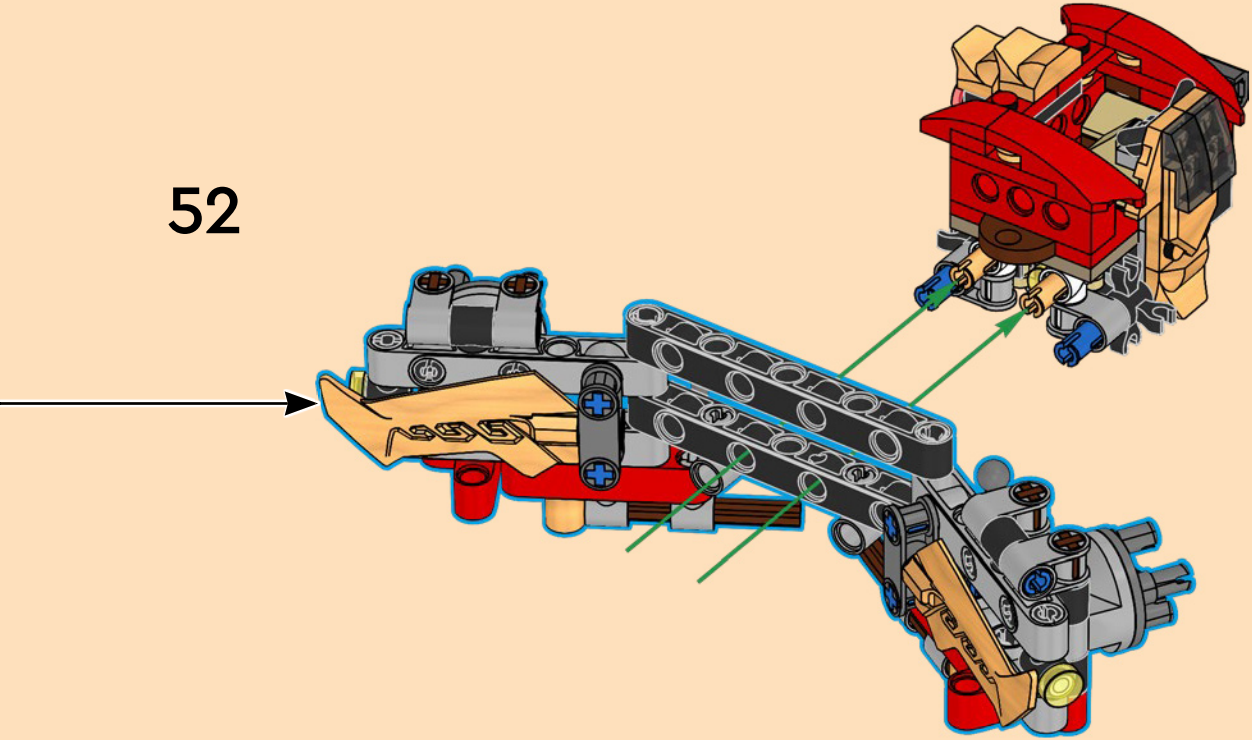

53

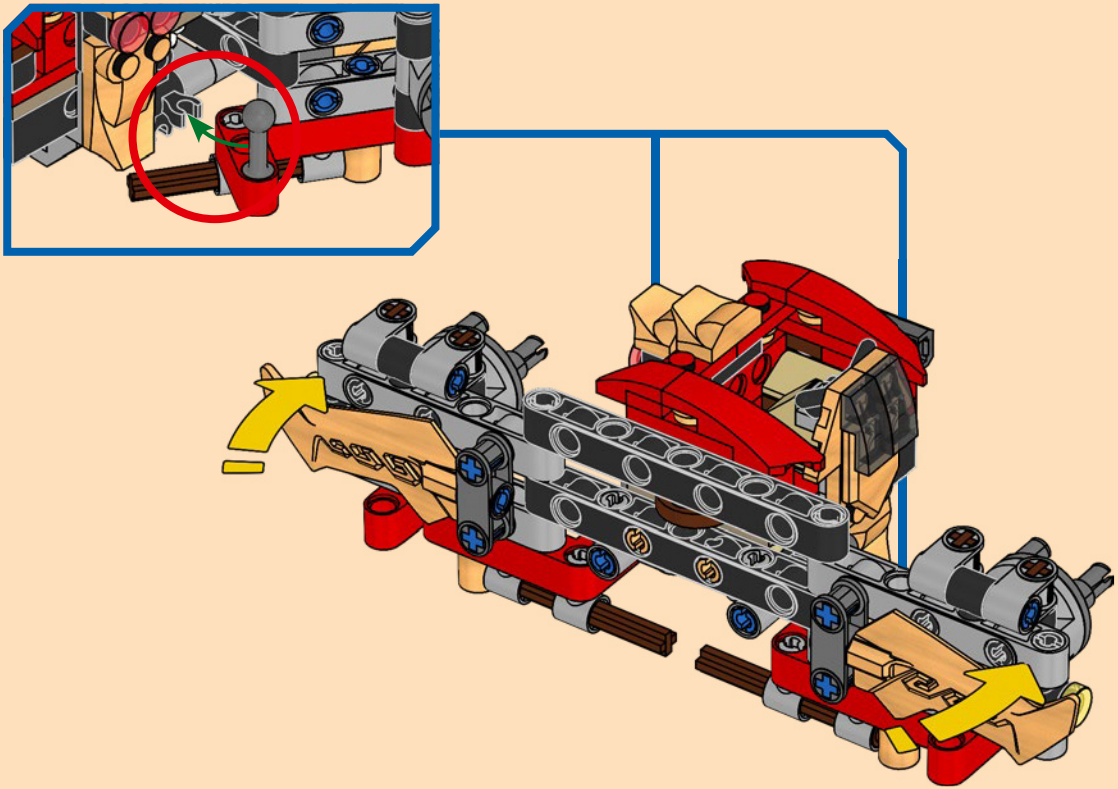

54

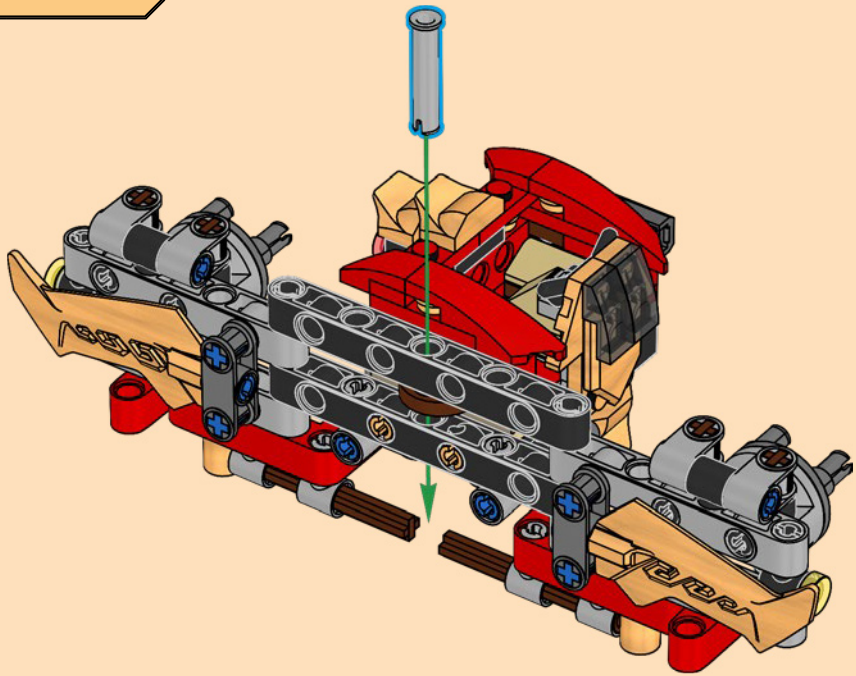

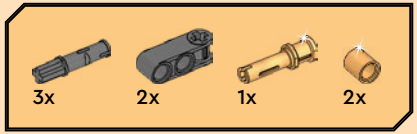

55

1

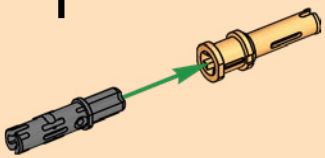

2

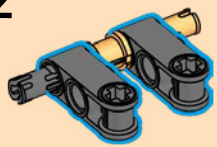

3

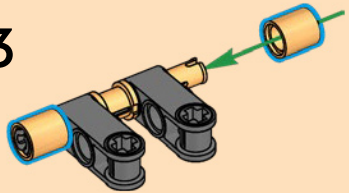

4

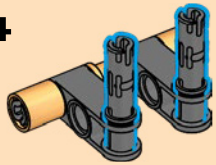

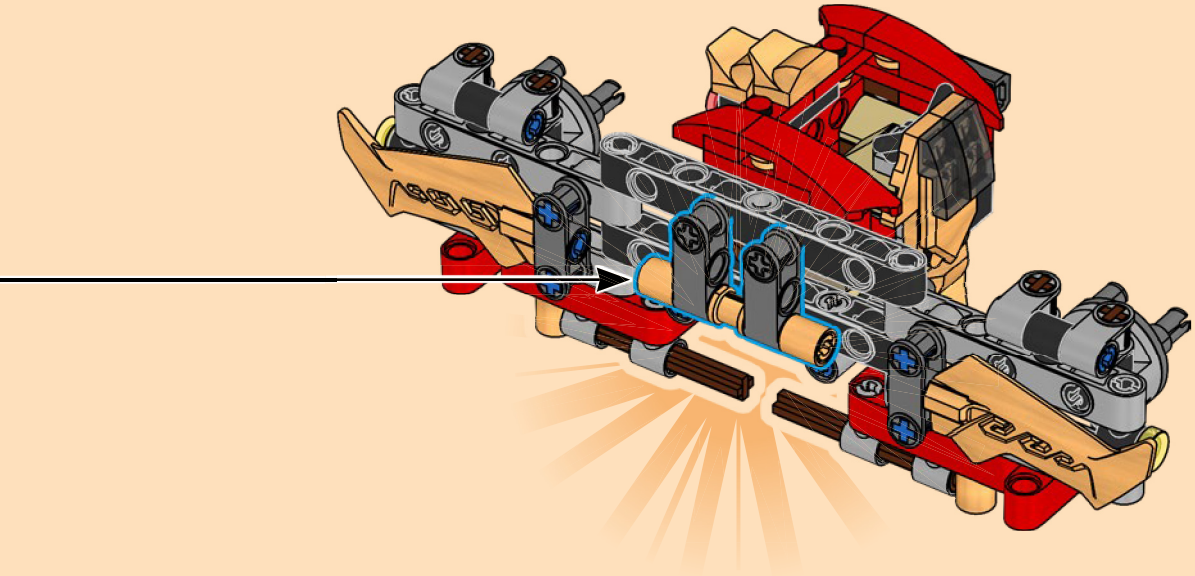

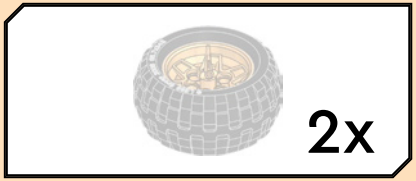

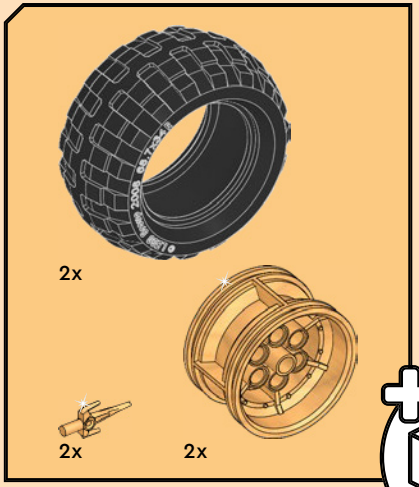

56

1

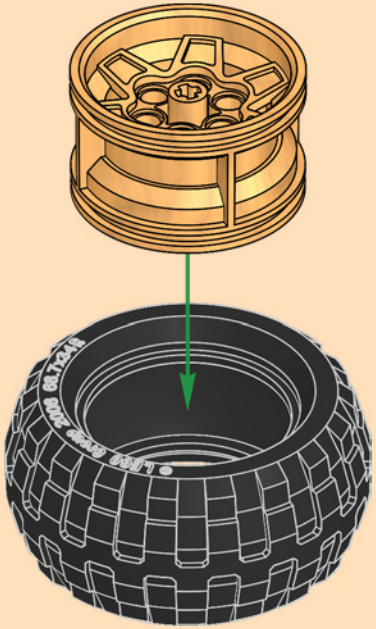

2

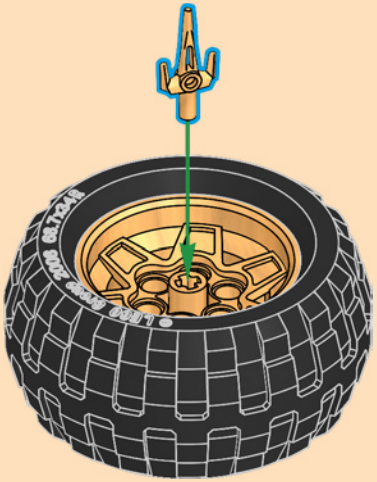

2x

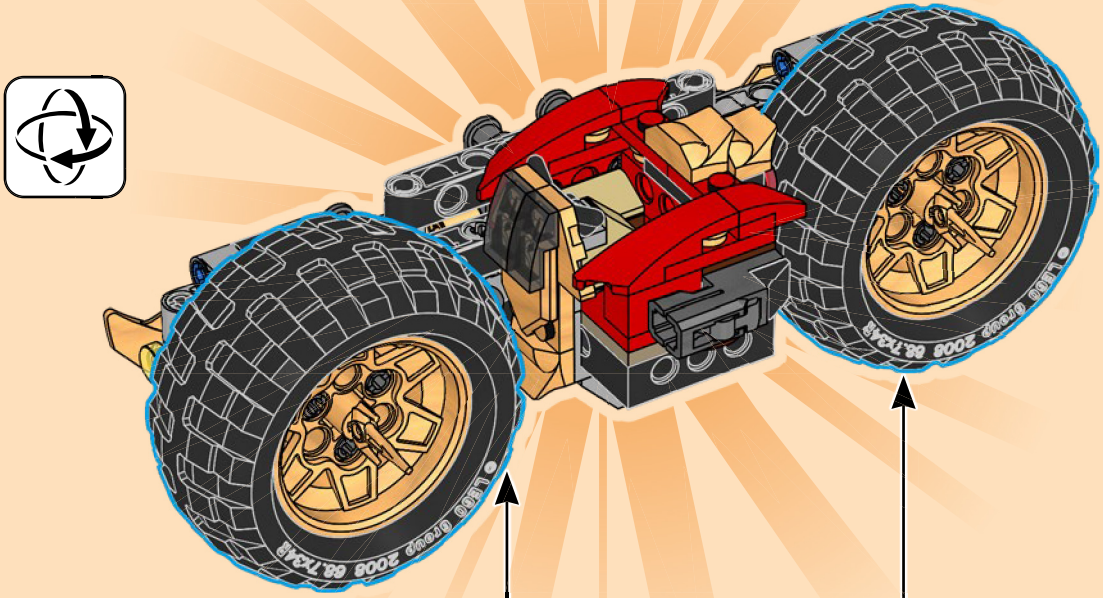
LEGO GROUP 2008 88.7X48

57

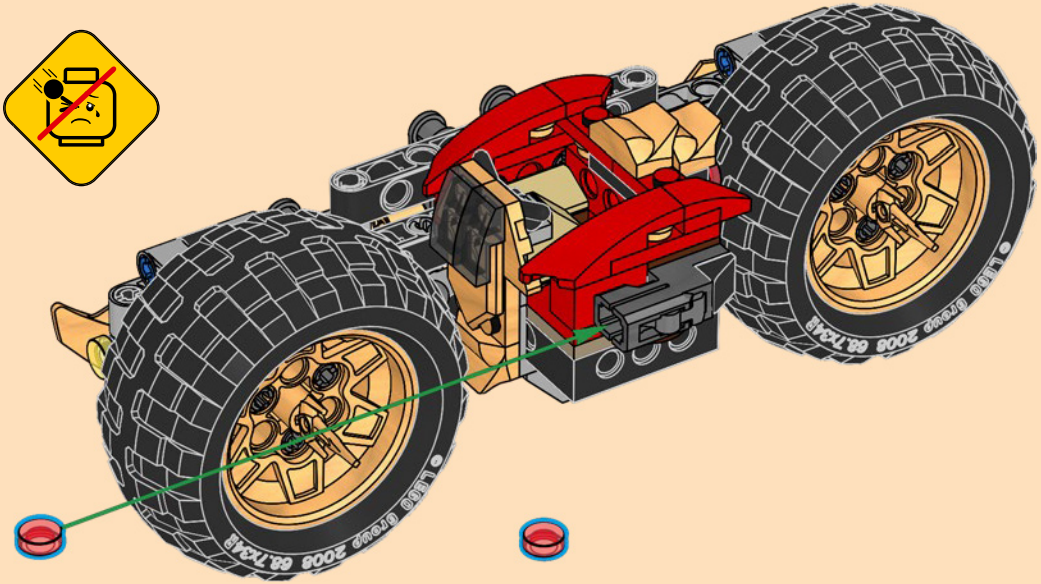

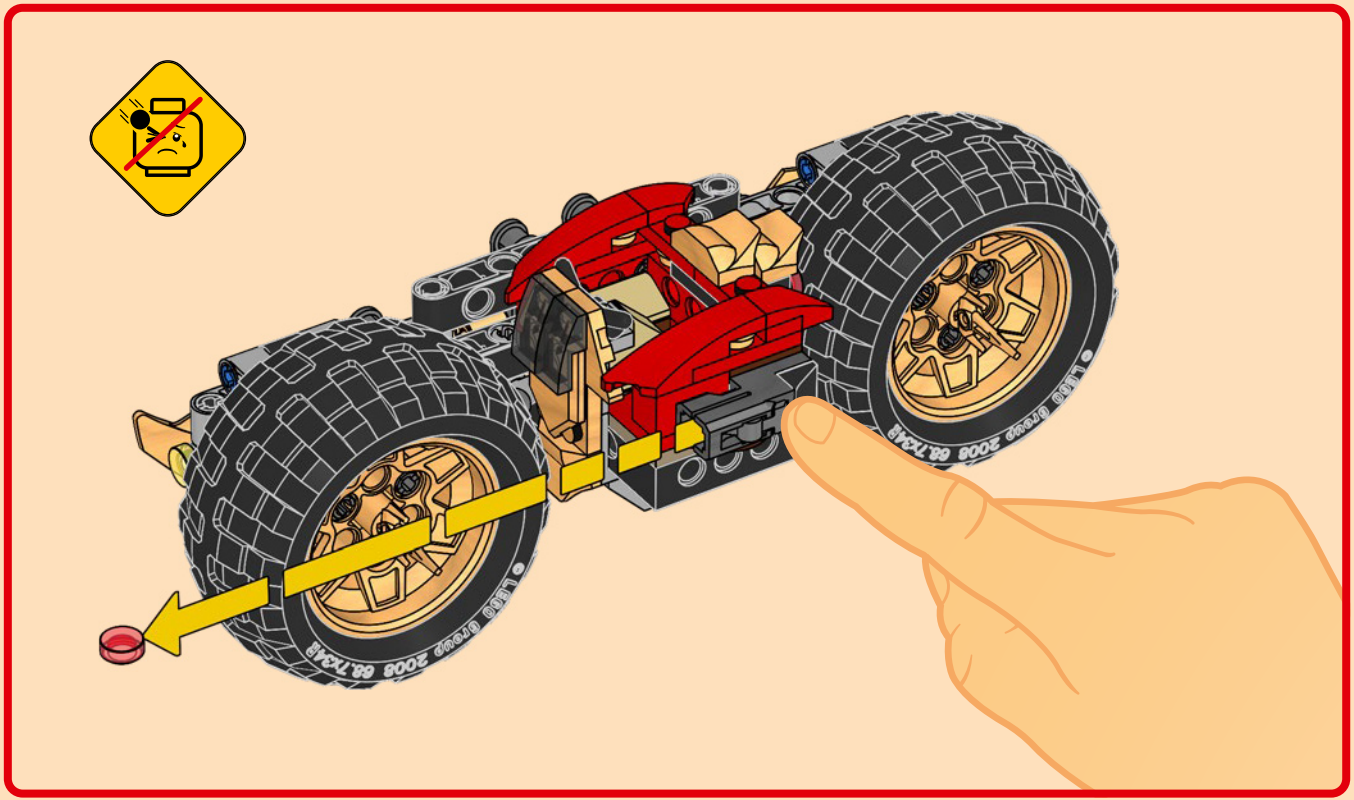

LEGO Group 2008 68.TX4.P
LEGO Group 2008 68.TX4.P

1

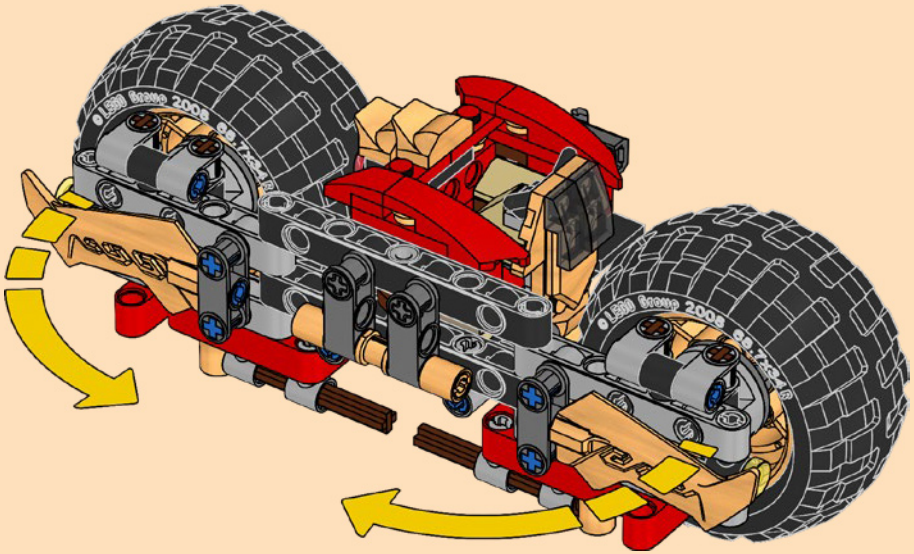

2

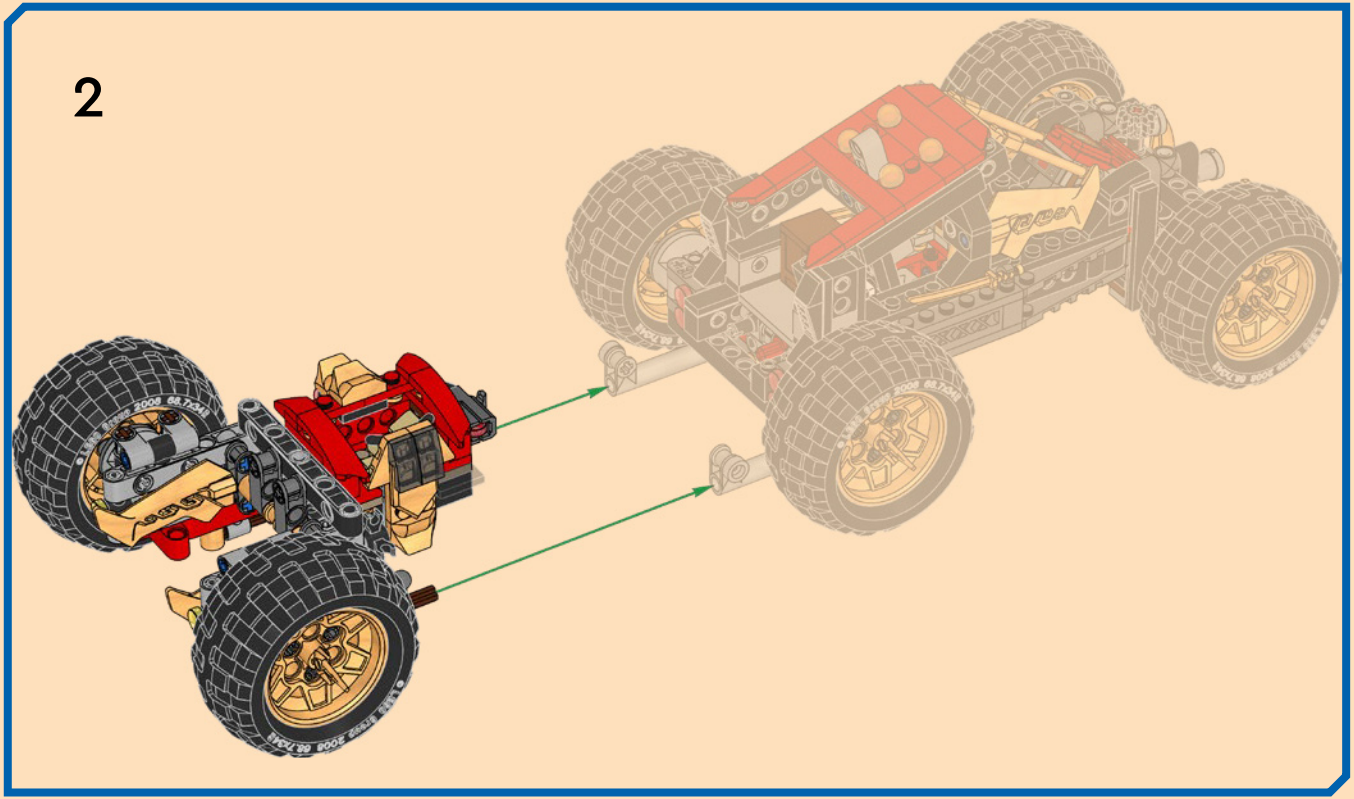

Rebuild the World™

LEGO, the LEGO logo, NINJAGO and the NINJAGO logo are trademarks of the/
sont des marques de commerce du/son marcas registradas de LEGO Group.
©2026 The LEGO Group.

6649816