LEGO CREATOR™

3 IN 1

31380

1
2
3

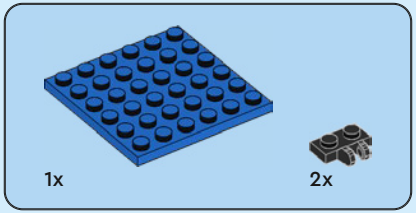

1

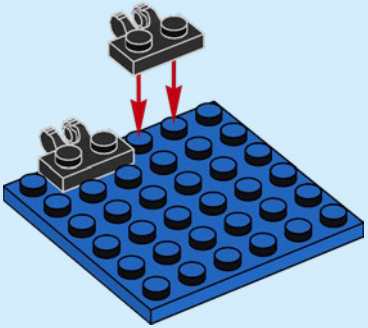

2

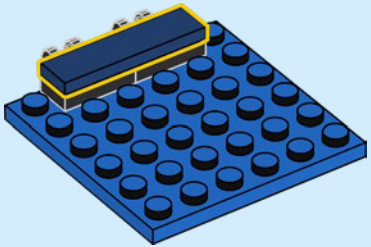

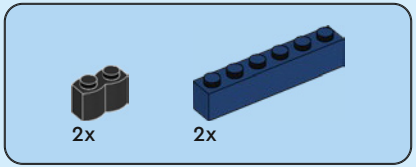

3

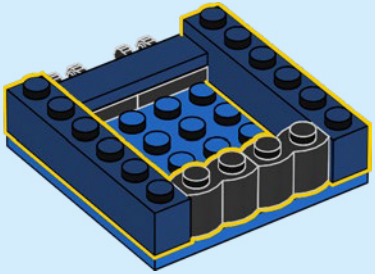

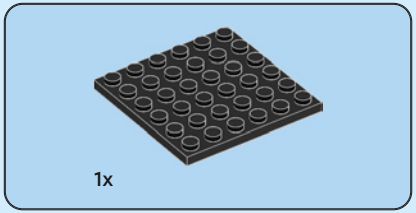

4

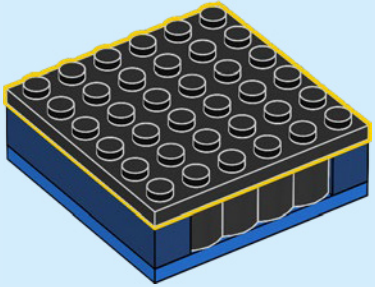

5

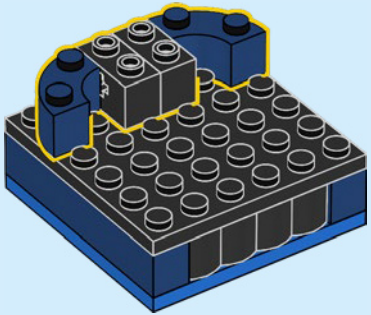

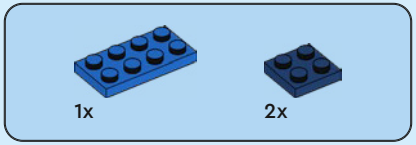

6

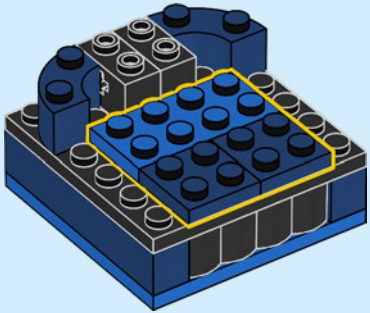

7

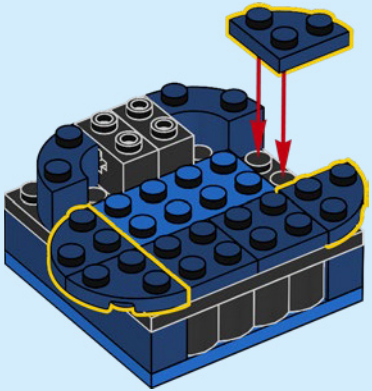

8

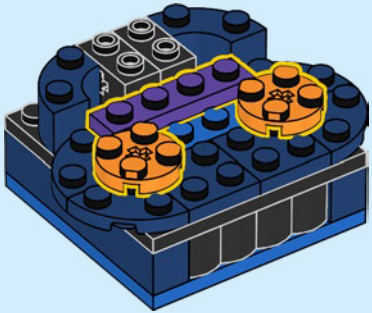

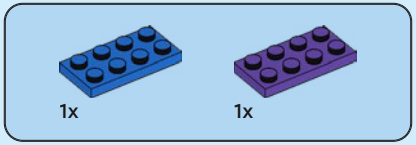

9

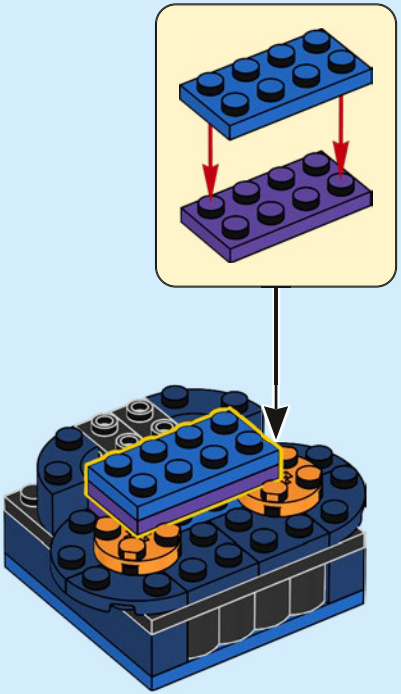

1x

10

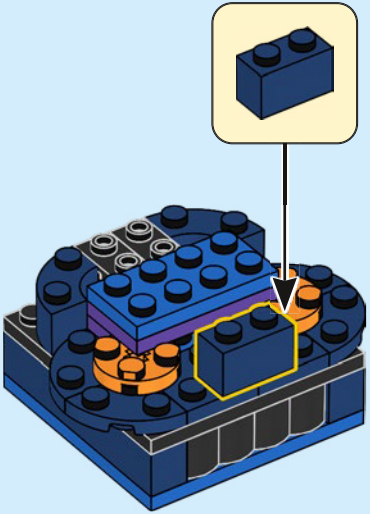

11

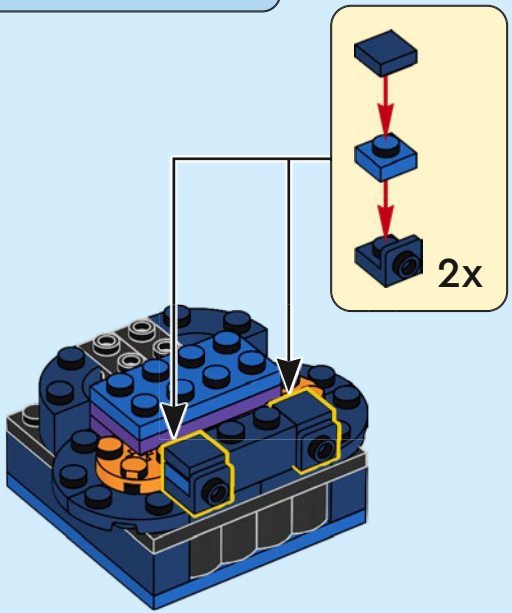

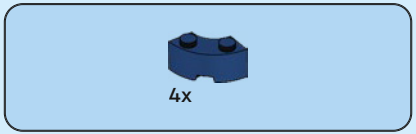

12

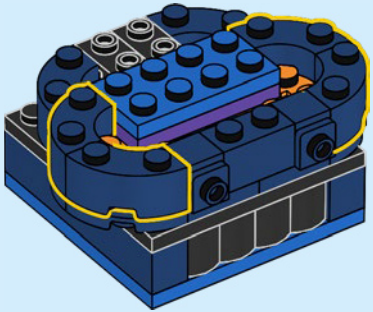

2x

13

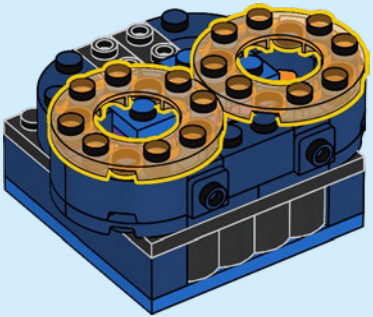

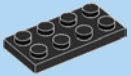

1x

2x

14

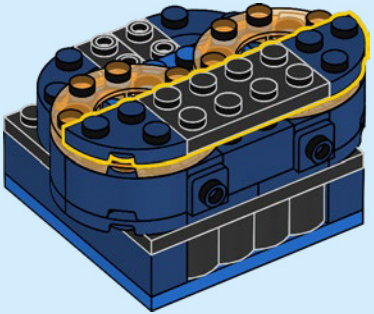

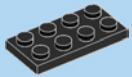

2x

15

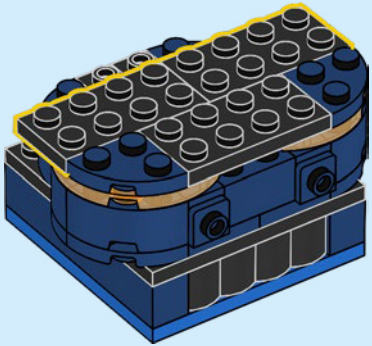

2x

16

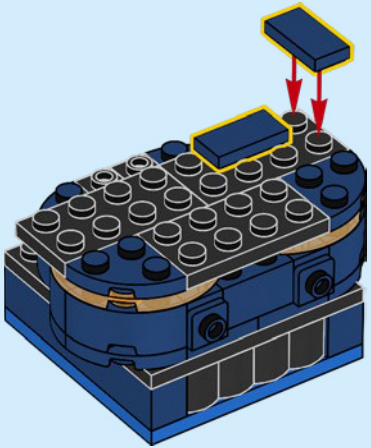

3x

17

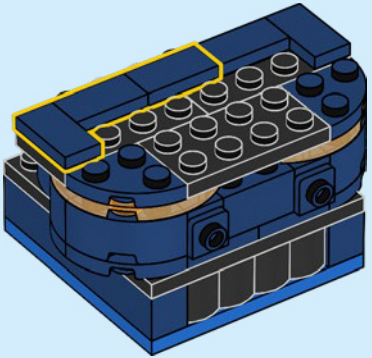

18

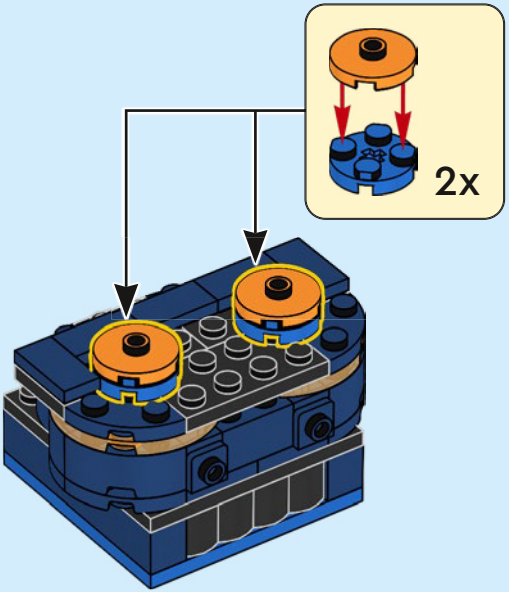

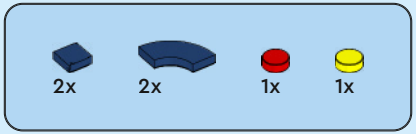

19

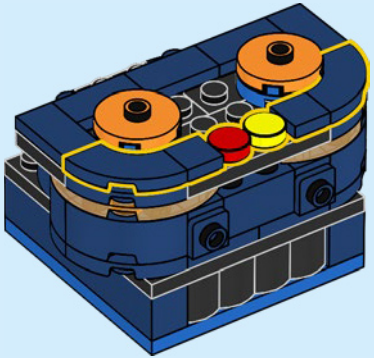

2x

20

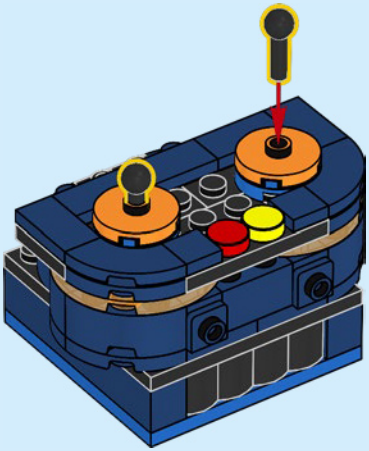

2x

21

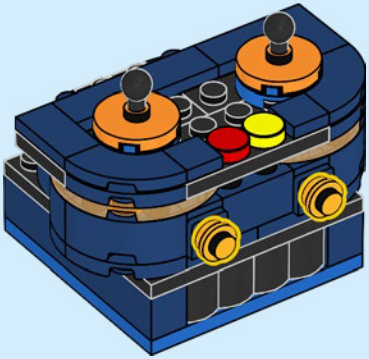

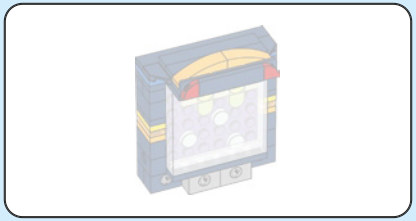

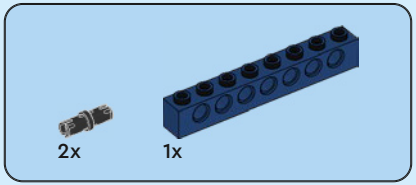

22

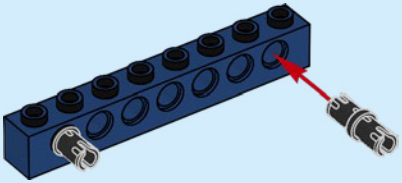

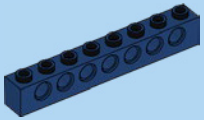

23

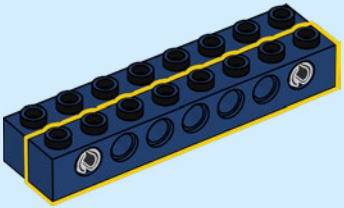

2x

24

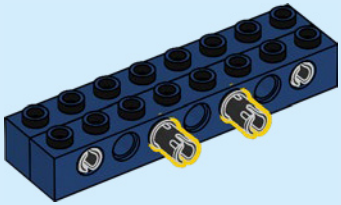

2x

25

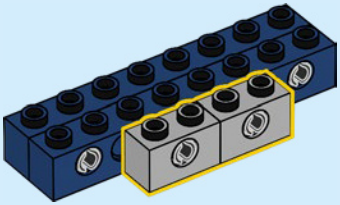

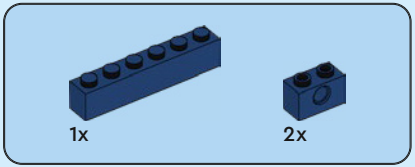

26

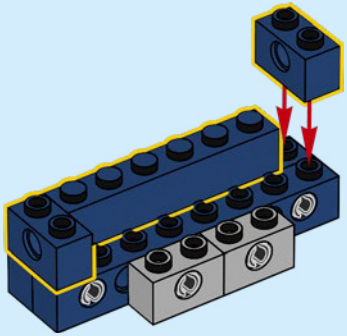

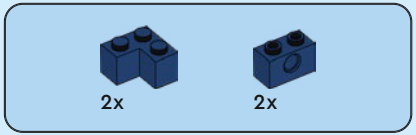

27

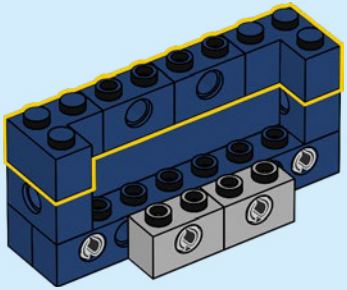

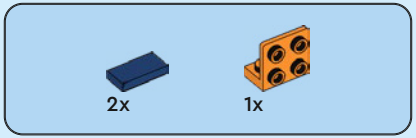

28

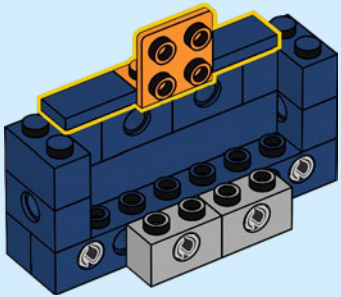

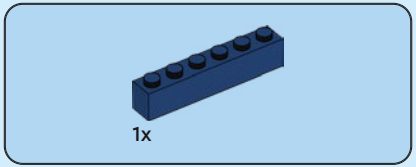

29

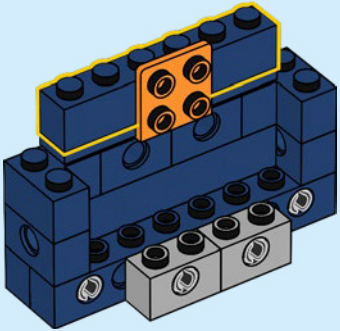

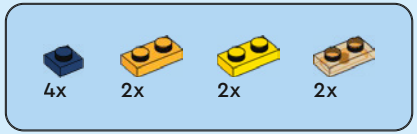

30

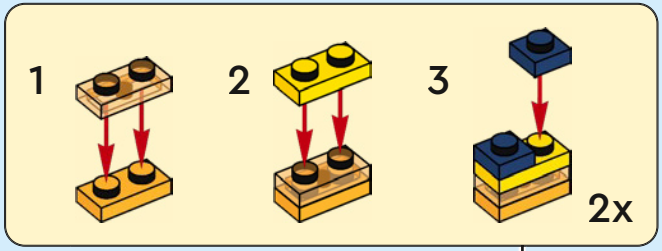

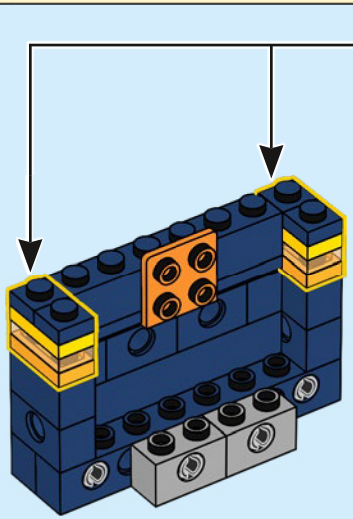

31

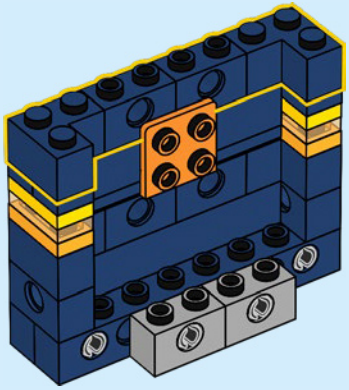

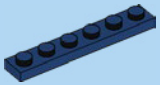

1x

32

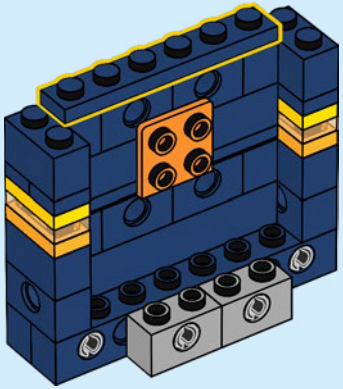

4x

33

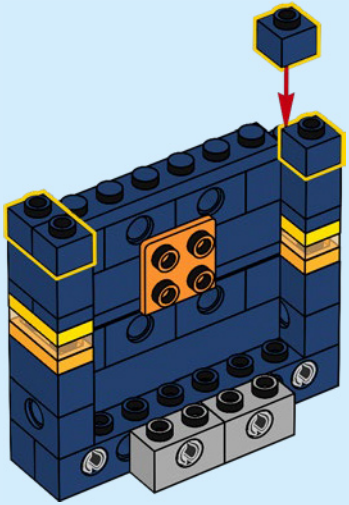

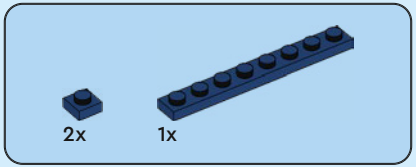

34

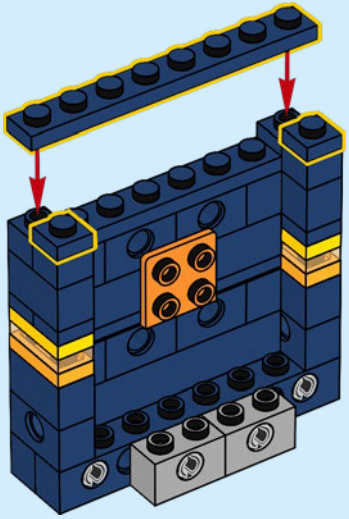

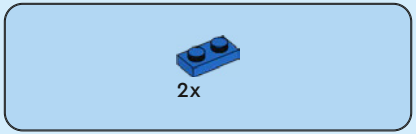

35

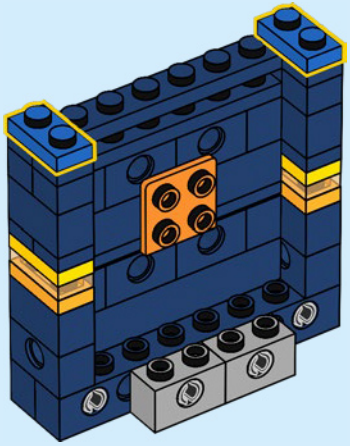

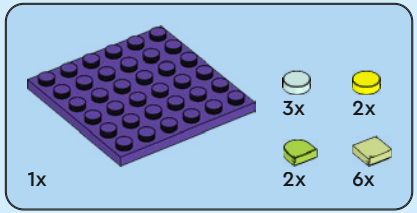

36

1

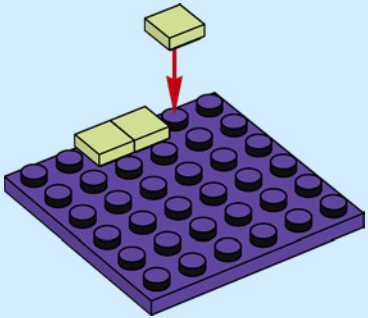

2

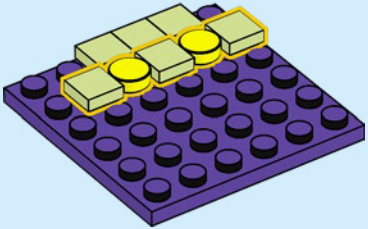

3

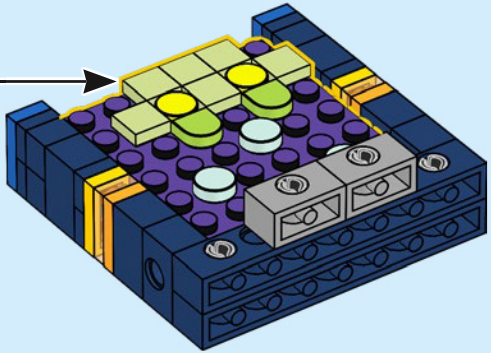

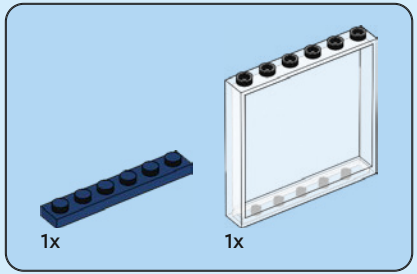

37

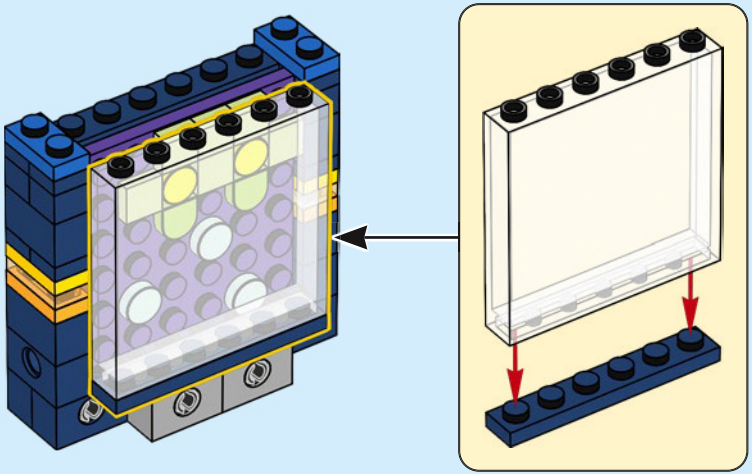

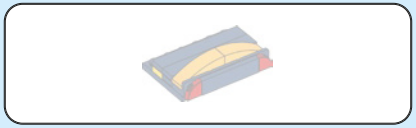

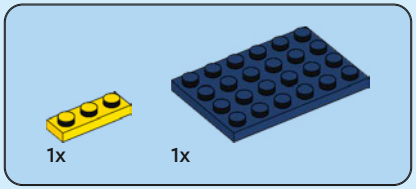

38

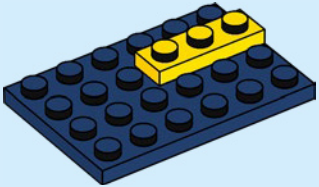

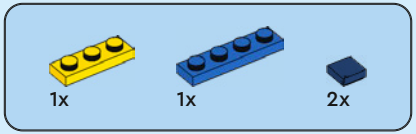

39

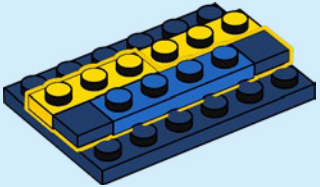

40

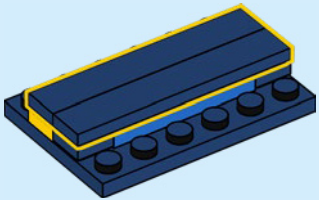

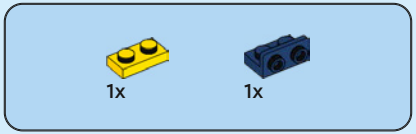

41

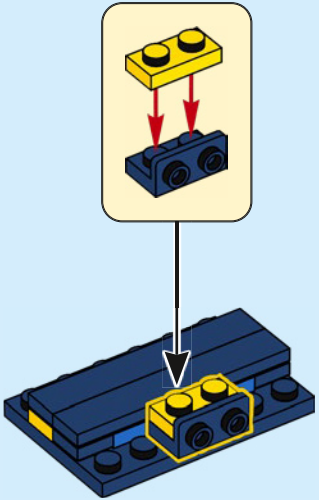

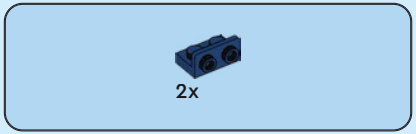

42

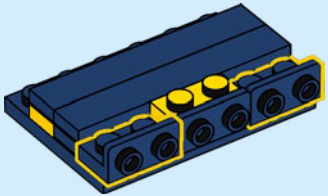

43

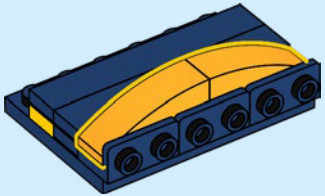

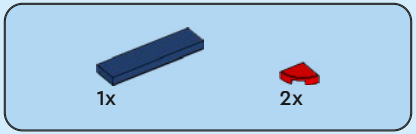

44

45

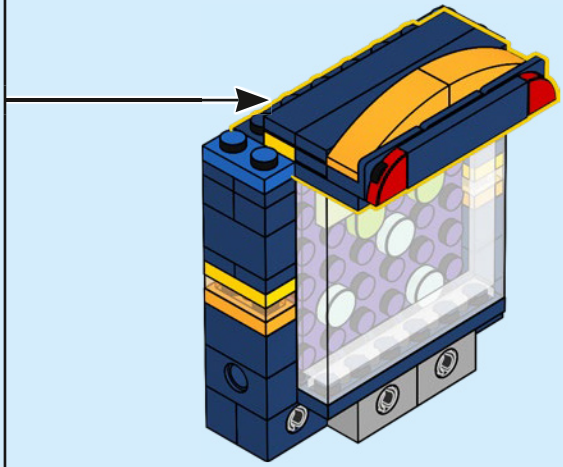

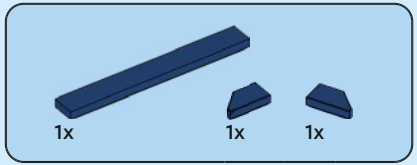

46

47

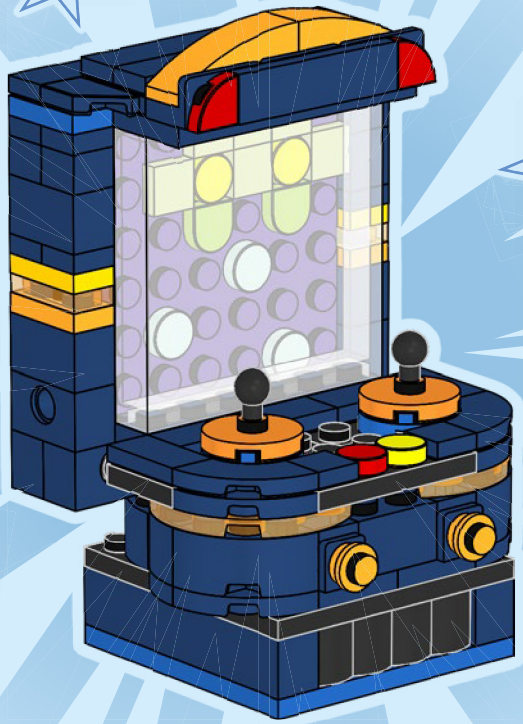

Rebuild the World™

LEGO and the LEGO logo are trademarks of the/sont des marques de commerce du/son marcas registradas de LEGO Group. ©2026 The LEGO Group.

6616321