75409 | 1

Booklet available in English
Heft in deutscher Sprache erhältlich
Livret disponible en français
Libretto disponibile in italiano
Folleto disponible en español
如需中文版手册

LEGO® Builder

LEGO.com/sustainable-packaging

FR

DONNEZ
OU
RECYCLEZ

ASSOCIATION OU MAGASIN OU DÉCHÈTERIE

Adresses sur quefairedemesdechets.fr

BUILDER

Download on the App Store

GET IT ON Google Play

腾讯应用宝
安卓应用商店

Apple and the Apple logo are trademarks of Apple Inc., registered in the U.S.
and other countries and regions. App Store is a service mark of Apple Inc.
Google Play and the Google Play logo are trademarks of Google LLC.
Tencent and the Tencent logo are trademarks of Tencent Inc.

LEGO.com/devicecheck

LEGO® Builder

BUILT TO HUNT

Jango Fett's starship embodies the notorious bounty hunter's prowess, agility and resourcefulness. After modifying the rare *Firespray-31*-class patrol craft to suit his line of work, it serves him on epic missions throughout the galaxy and the saga. In *Attack of the Clones* (2002), in the famous space chase through the Geonosis asteroid field, we see the unmatched versatility of this mobile base of operations. The ship's unusual design, with its vertical orientation during flight mode, really sets it apart from other starfighters and cruisers. Now it joins our extensive LEGO® *Star Wars*™ Ultimate Collector Series, combining an exhilarating building experience with a remarkable final creation.

Enjoy your flight!

Jens Kronvold Frederiksen
Creative Lead & Design Director
LEGO® *Star Wars*™

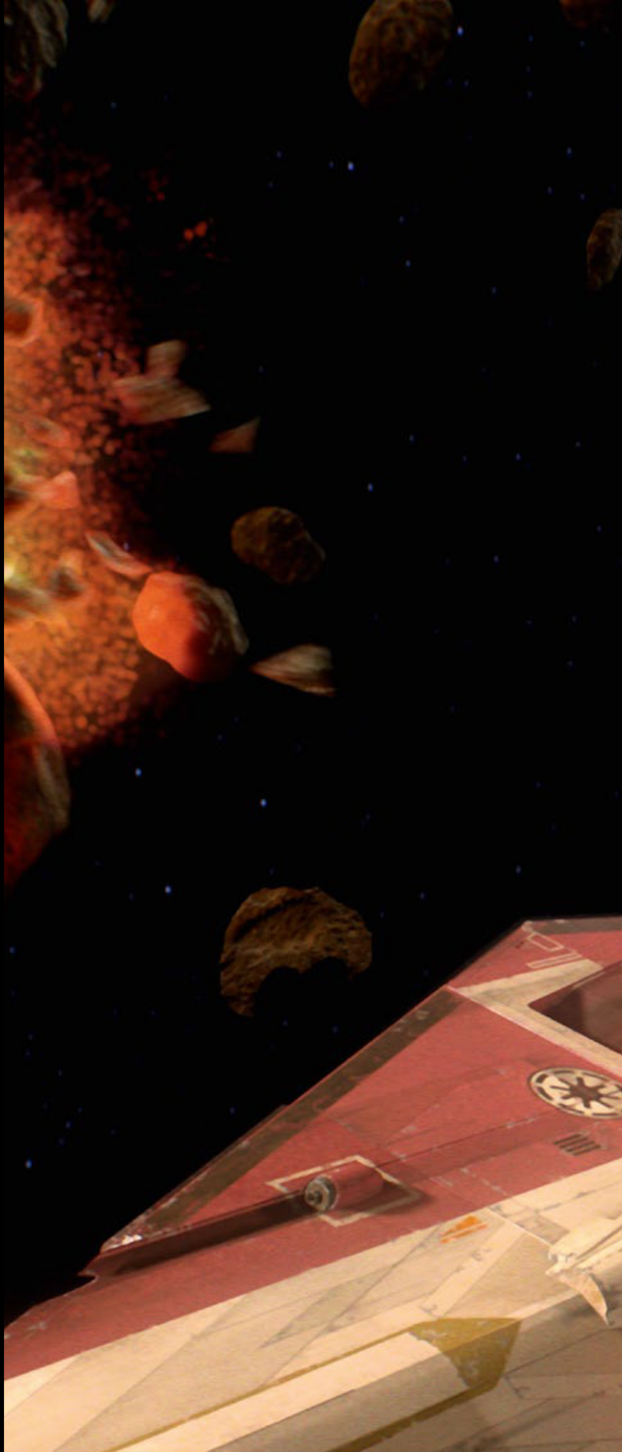

© & ™ Lucasfilm Ltd.

© & ™ Lucasfilm Ltd.

ONE OF A KIND

As befits any decent bounty hunter in the galaxy, Jango Fett™ acquires his signature starship while on a chaotic mission. After losing his previous ship during a prison riot on the Oovo 4 asteroid, he steals one of the six *Firespray* patrol ships from the prison's hangar bay, blowing up the remaining five on his way out. Even after Jango is later offered a comfortable life as the well-paid prime clone for Count Dooku's clone army on Kamino, he keeps his starship and continues to pursue his bounty-hunting activities. The rest is *Star Wars™* history.

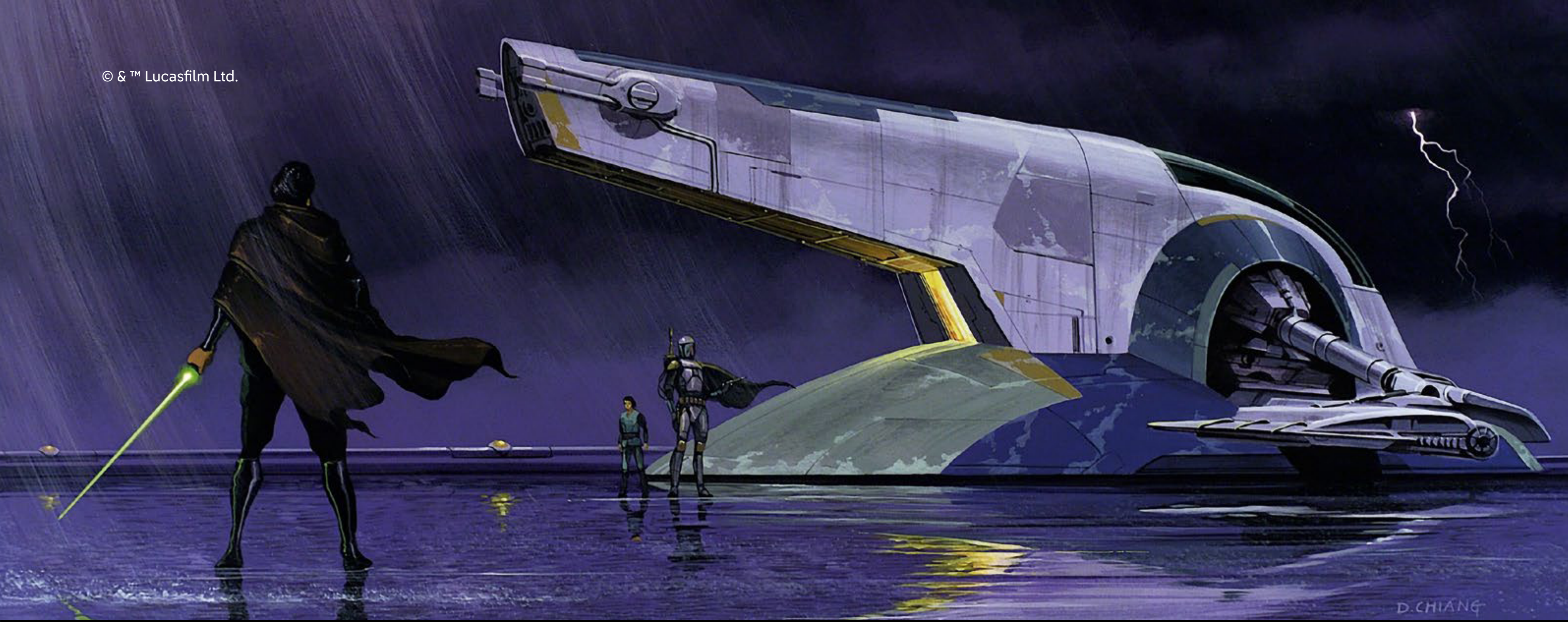

© & ™ Lucasfilm Ltd.

BUILT TO LAST

Originally manufactured by Kuat Systems Engineering, Jango's starship stands out with its vertical configuration, pivoting 90 degrees during flight. Its weathered blue-green-and-yellow colour scheme makes it deceptively non-threatening – at least at first glance. At 21.5 metres (70.6 ft.) long, it's not overwhelming in size (wingspan is 21.3 metres (69 ft. 11 in)), but it's a fast, reliable getaway when dodging the Jedi.

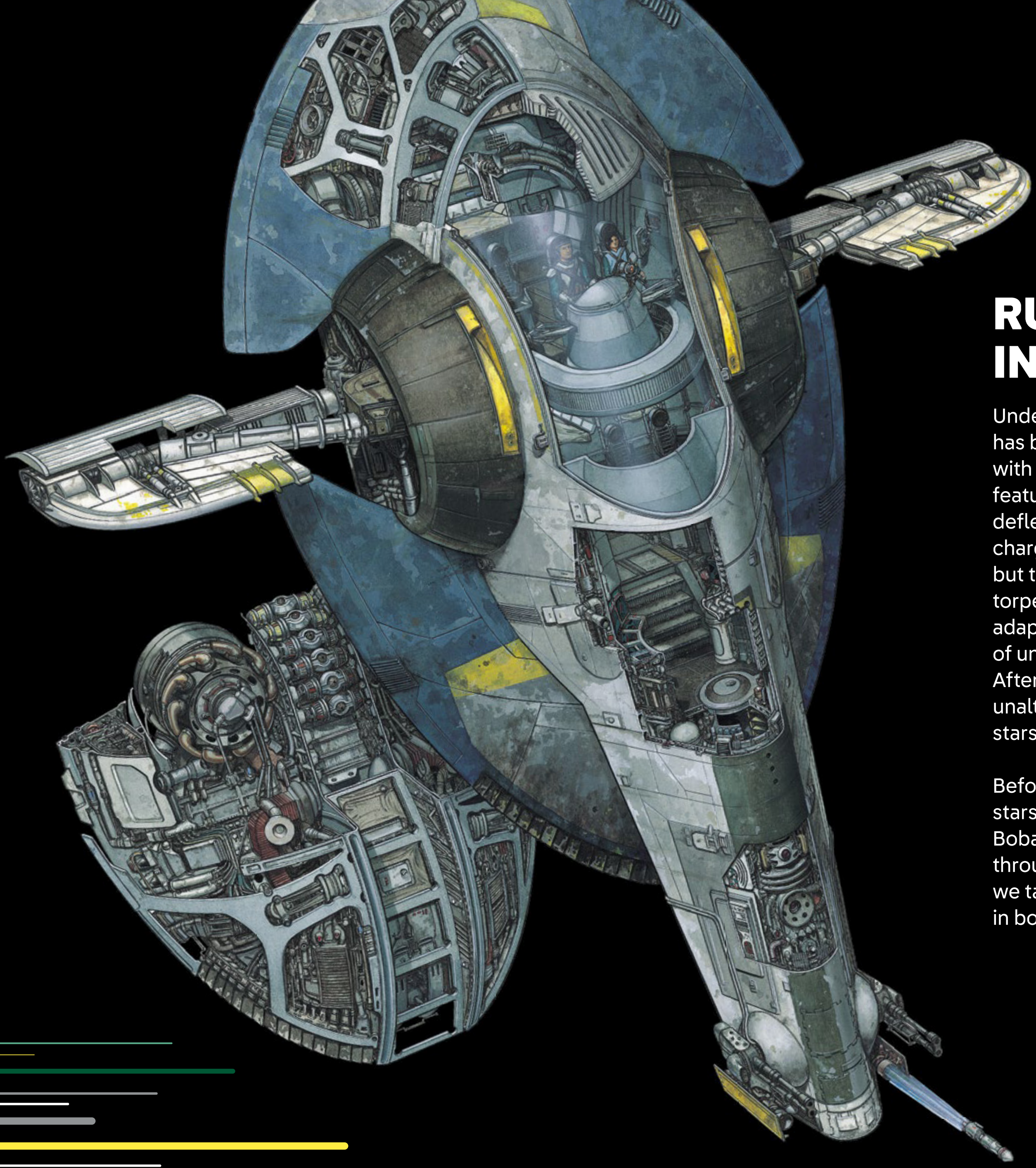

RUNNING IN THE FAMILY

Under Jango Fett's control, the starship's interior has been customised to transport prisoners, with limited focus on comfort. The exterior now features advanced stealth tech and powerful deflector shields. Its arsenal includes seismic charges and enhanced twin blaster cannons, but the naval minelayer and concealed torpedoes are perhaps the most ingenious adaptations. Together, they unleash a swarm of unpleasantness on unsuspecting pursuers. After Jango meets his untimely demise, Jango's unaltered clone son, Boba Fett™, inherits the starship to carry on his father's infamous legacy.

Before many of us first saw Jango Fett's iconic starship, we knew it under the ownership of Boba Fett™. Later, we followed its adventures throughout the expanding saga. For this model, we tapped into its origin story as a rare classic, in both the *Star Wars*™ and LEGO® galaxies.

© & ™ Lucasfilm Ltd.

© & ™ Lucasfilm Ltd.

© & ™ Lucasfilm Ltd.

DETAILS ON DISPLAY

By using new techniques, like triangular builds, and incorporating new curved elements, we achieved exceptionally high shape-fidelity when compared to the film version. The iconic colour scheme and authentic hull details complete the exterior design. As part of our Ultimate Collector Series models, it's also full of characteristic functions and interior design details, as well as new LEGO® Jango Fett™ and Young Boba Fett™ minifigures. In *Attack of the Clones*, we see father and son co-pilot the starship during their escape from Obi-Wan Kenobi™. This model is designed so you can remove and reattach the cockpit canopy to place both minifigures inside and recreate this defining moment in the fates of the two Fetts.

"Hang on, son. We'll move into the asteroid field,
and we'll have a couple of surprises for him."

– Jango Fett™

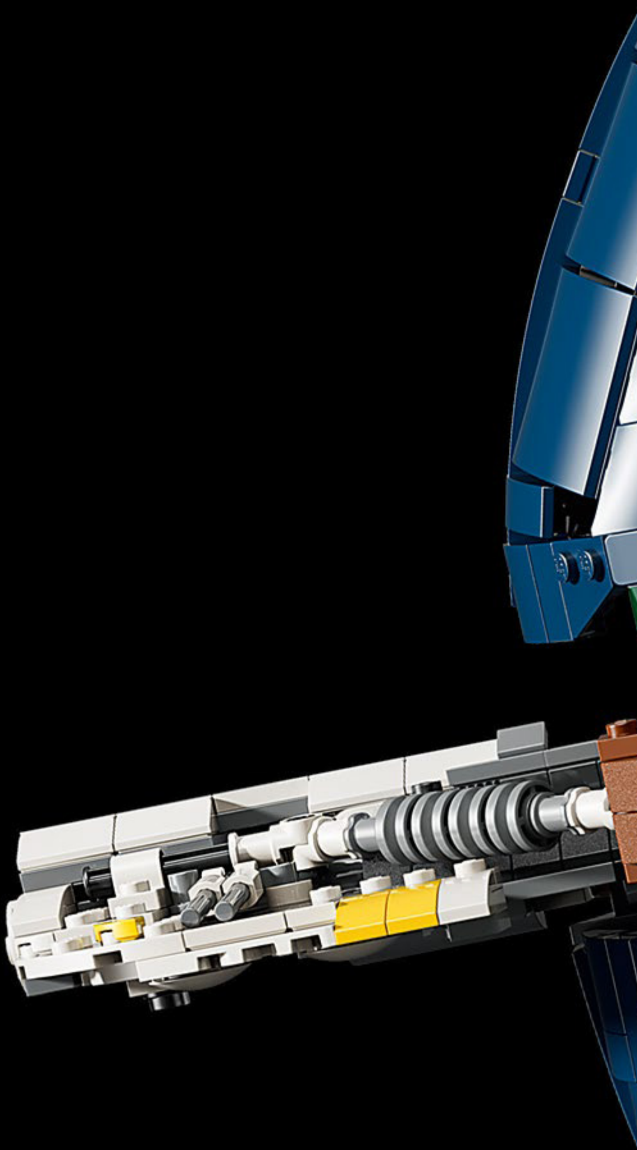

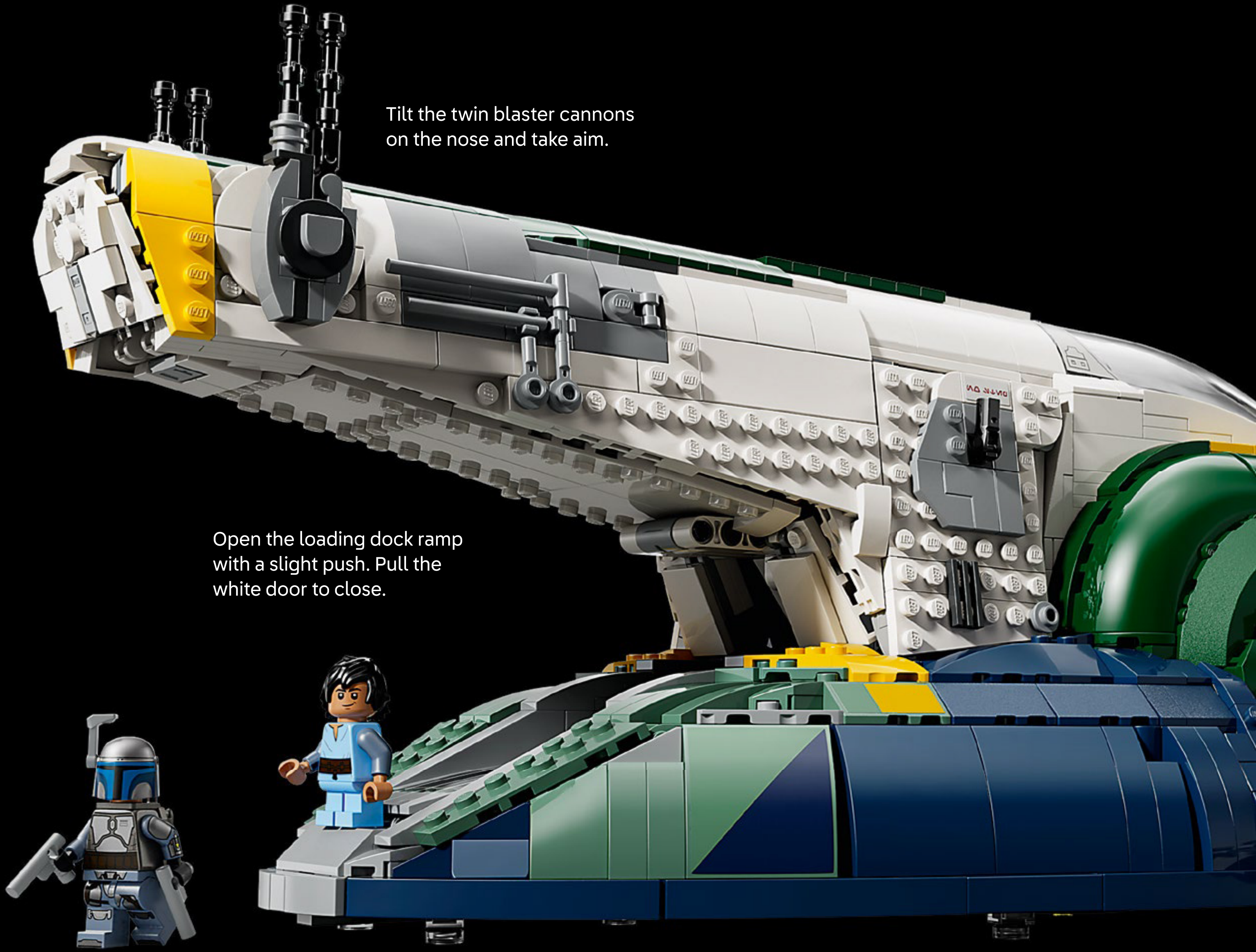

Tilt the twin blaster cannons on the nose and take aim.

Open the loading dock ramp with a slight push. Pull the white door to close.

GET ON BOARD

Over the *Star Wars*™ ages, Jango Fett's starship has seen its share of battles, Rebel scum and other prominent figures. Take a quick tour before you take the helm.

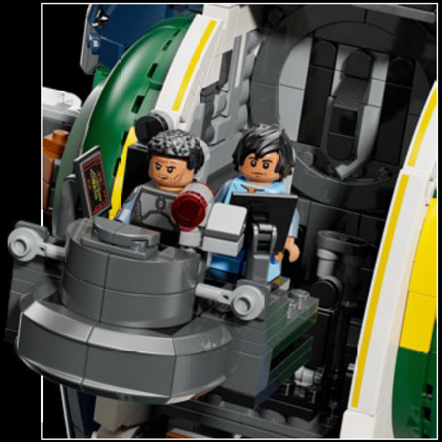

Remove the cockpit's upper deck to see the cockpit entrance and passenger seats.

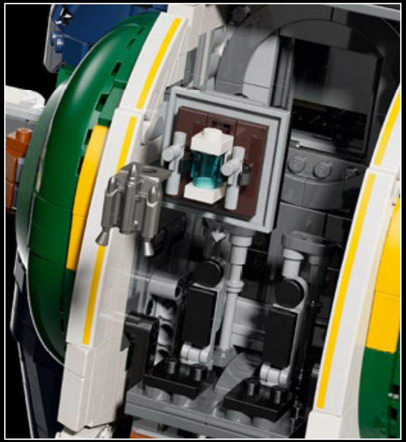

Hurt in battle? Heal fast with the bacta tank behind Jango's jetpack.

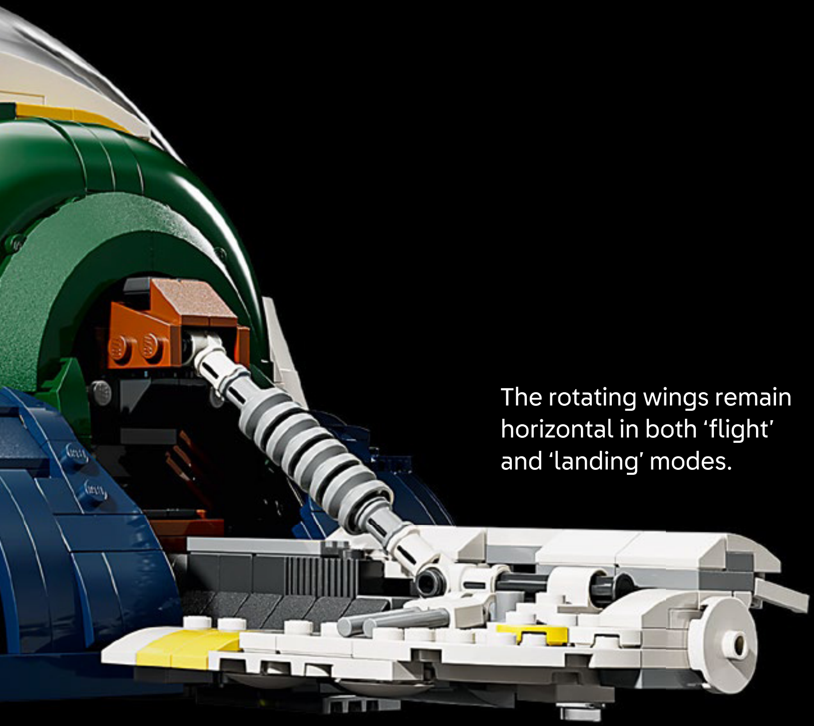

The rotating wings remain horizontal in both 'flight' and 'landing' modes.

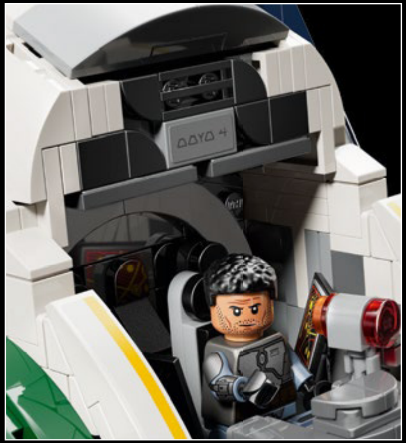

The Oovo 4 sign above the cockpit hints to the origins of Jango's starship.

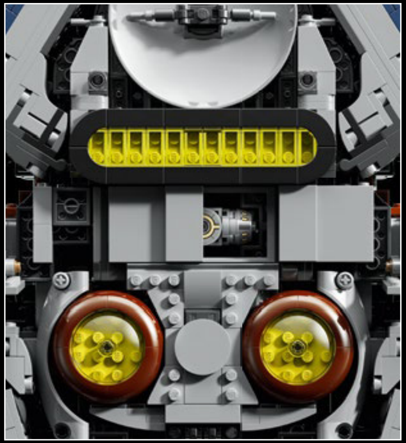

Move these doors to hide or 'release' the seismic charge.

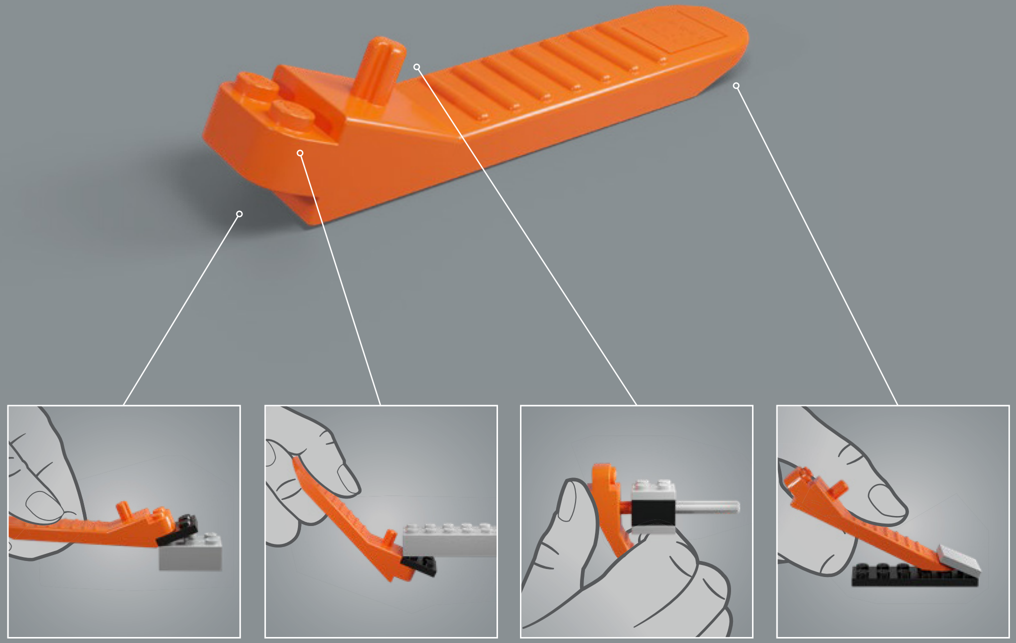

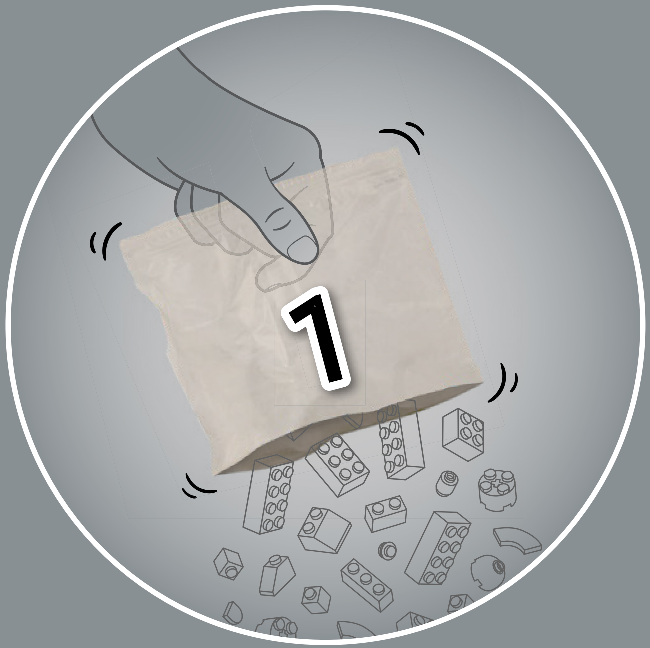

1

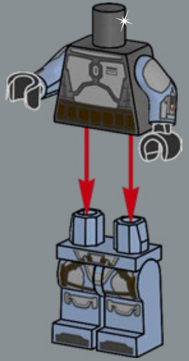

2

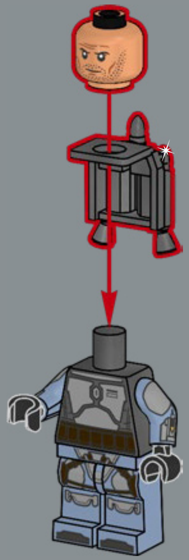

3

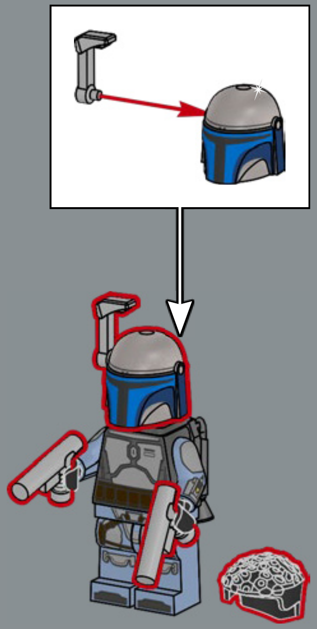

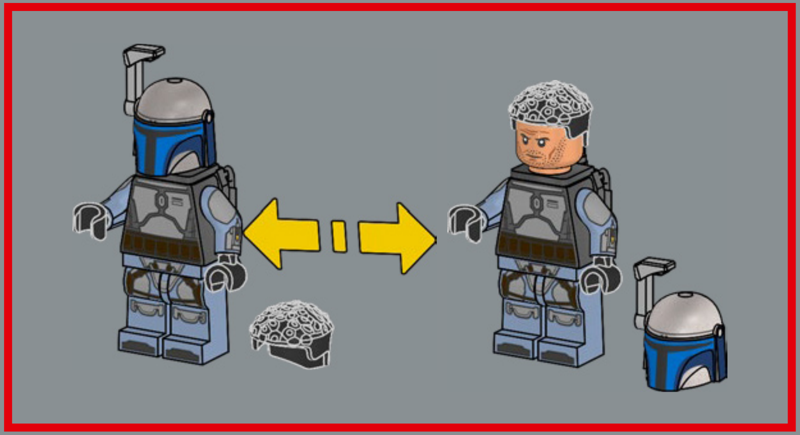

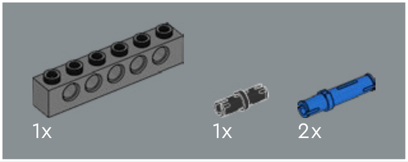

1

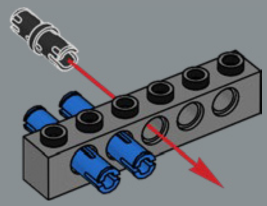

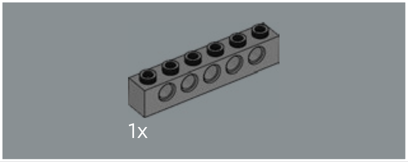

2

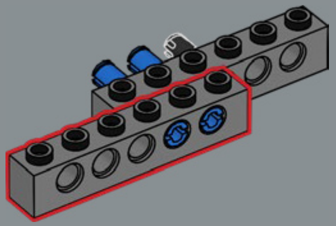

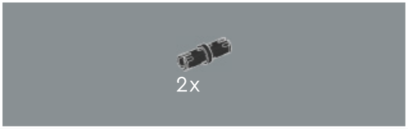

3

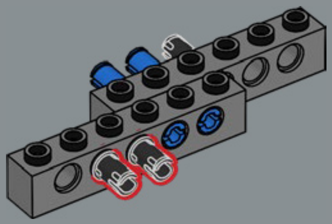

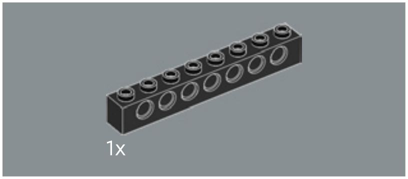

4

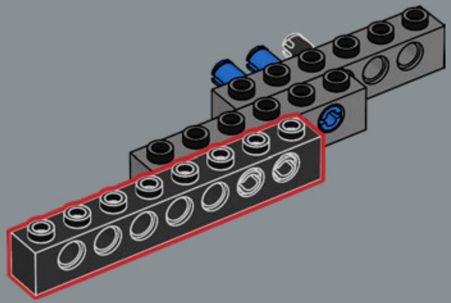

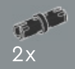

5

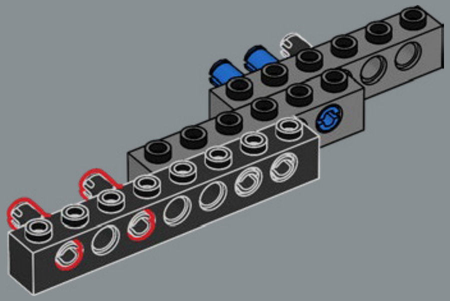

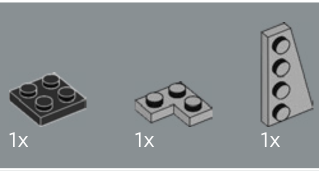

6

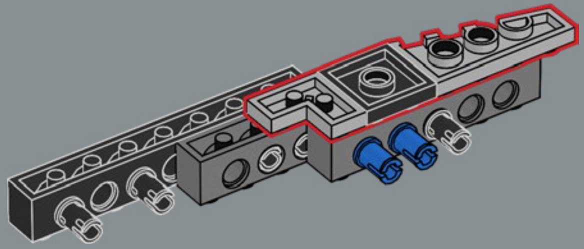

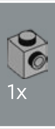

7

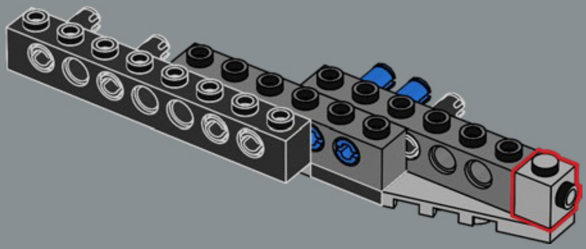

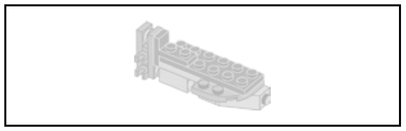

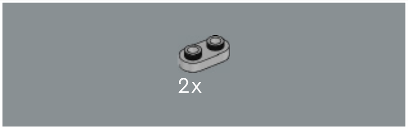

8

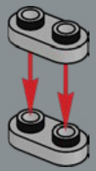

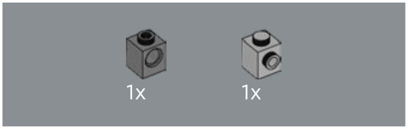

9

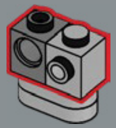

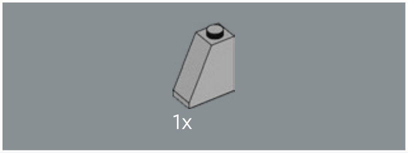

10

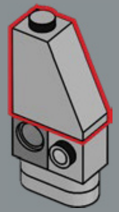

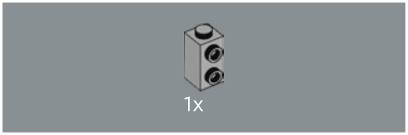

11

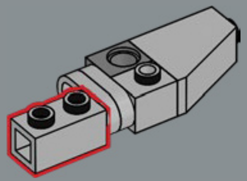

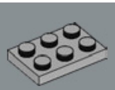

12

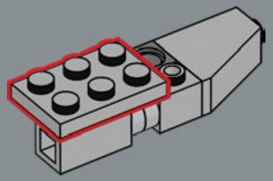

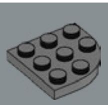

13

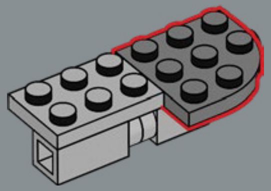

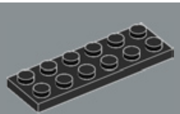

14

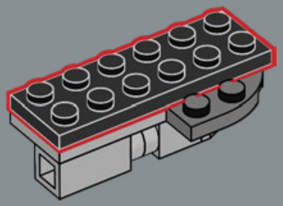

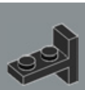

15

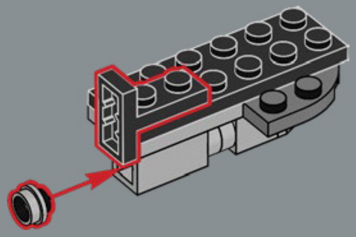

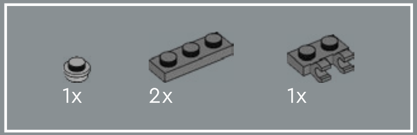

16

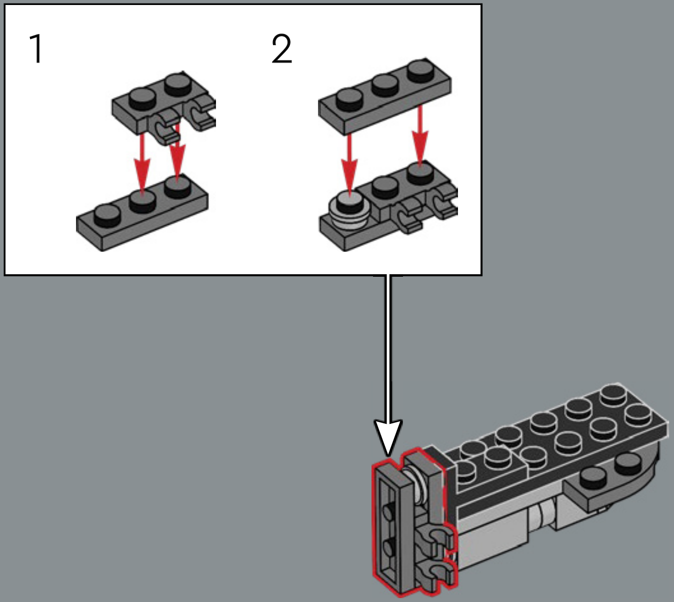

17

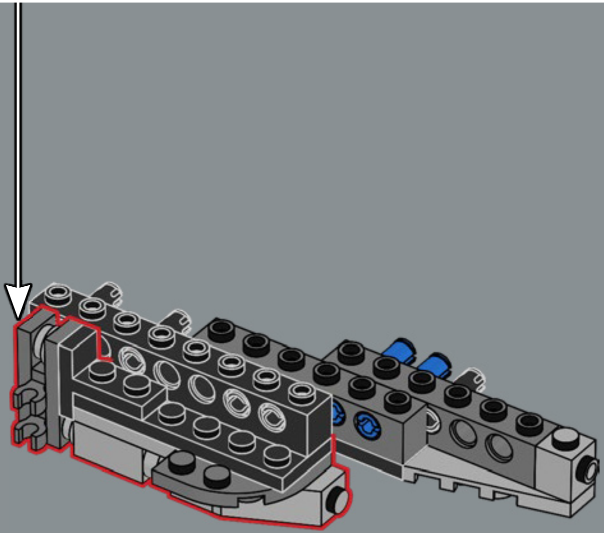

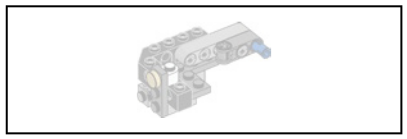

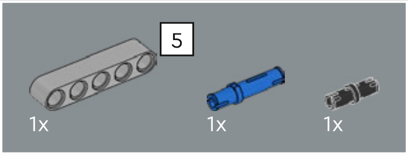

18

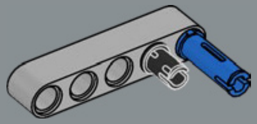

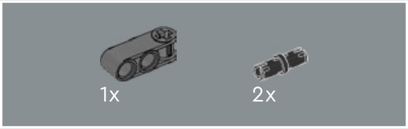

19

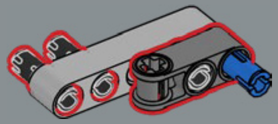

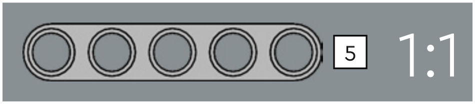

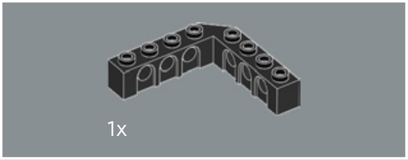

20

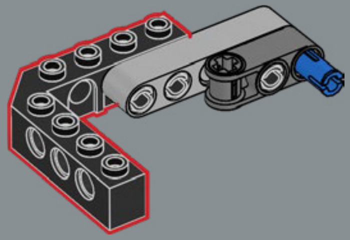

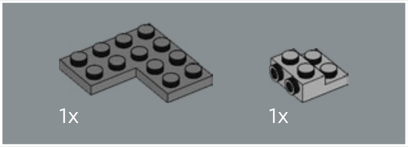

21

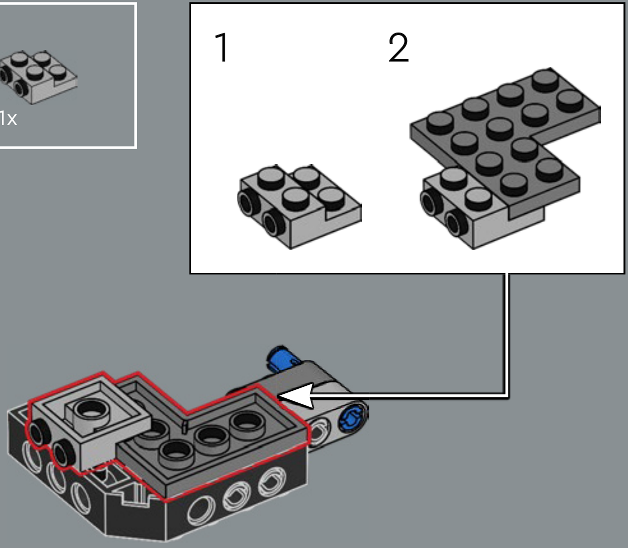

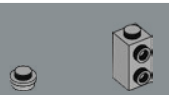

22

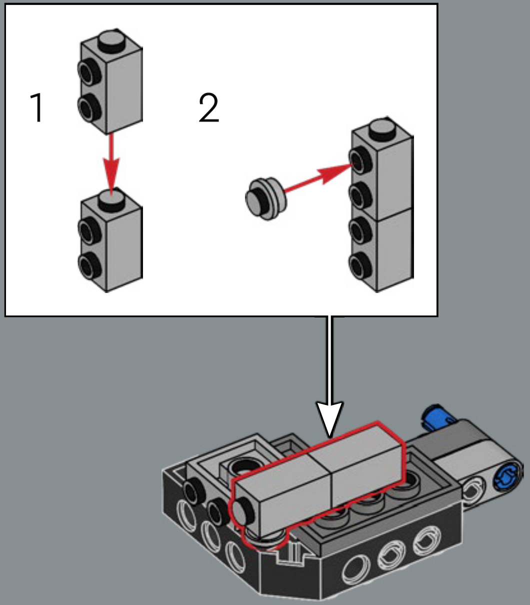

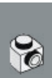

23

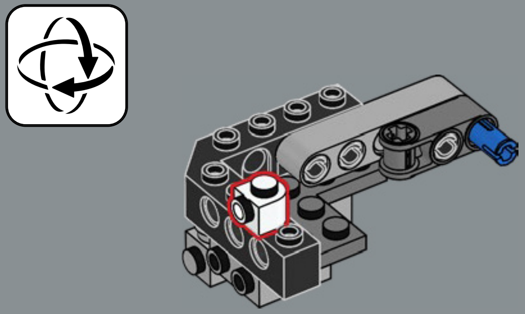

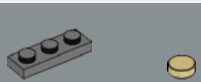

24

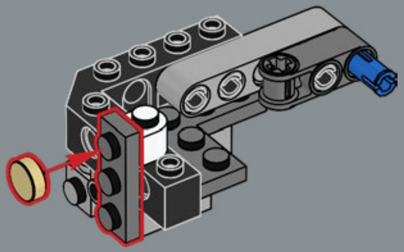

25

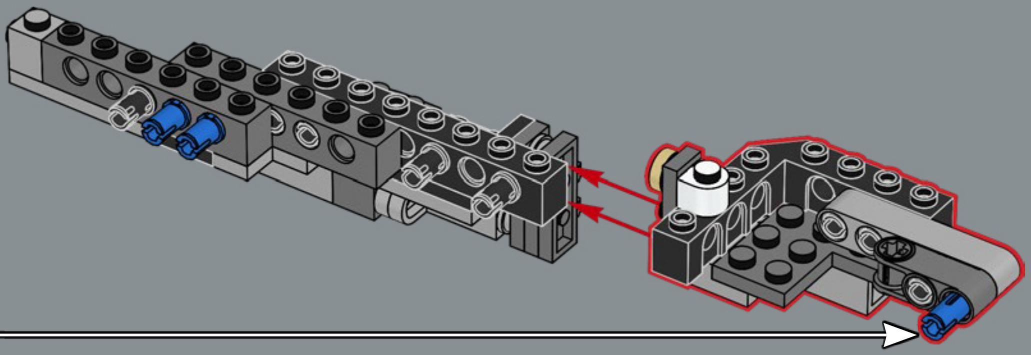

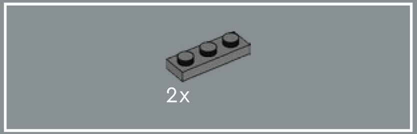

26

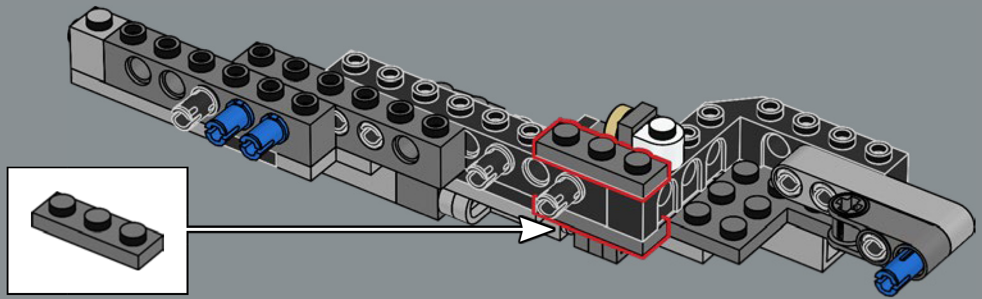

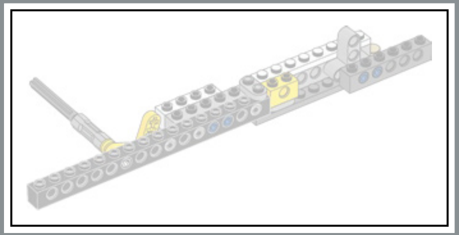

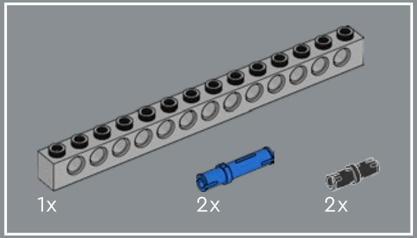

27

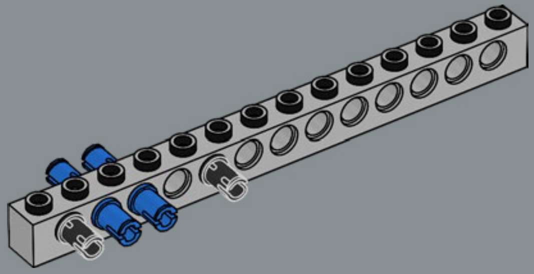

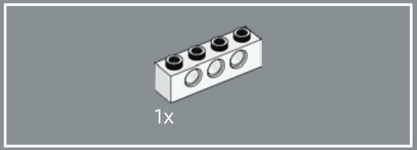

28

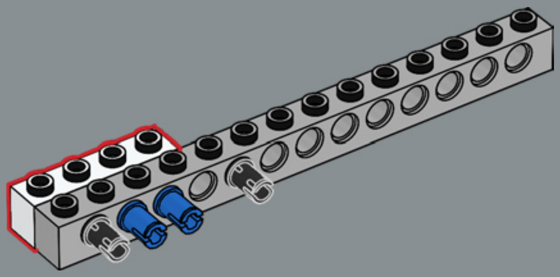

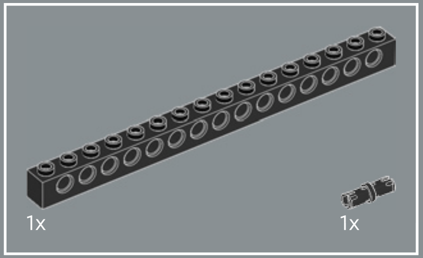

29

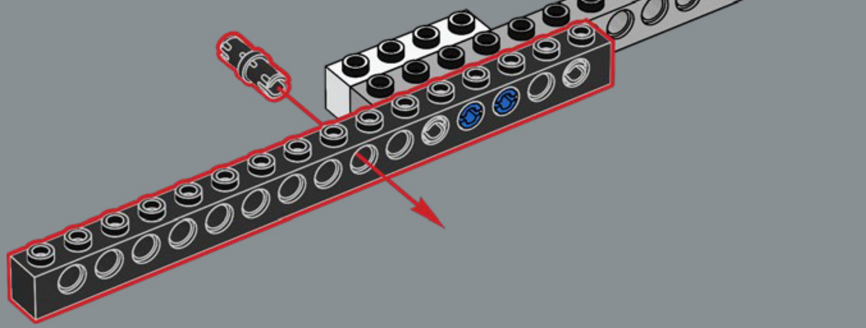

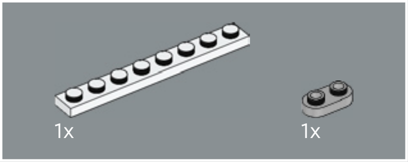

30

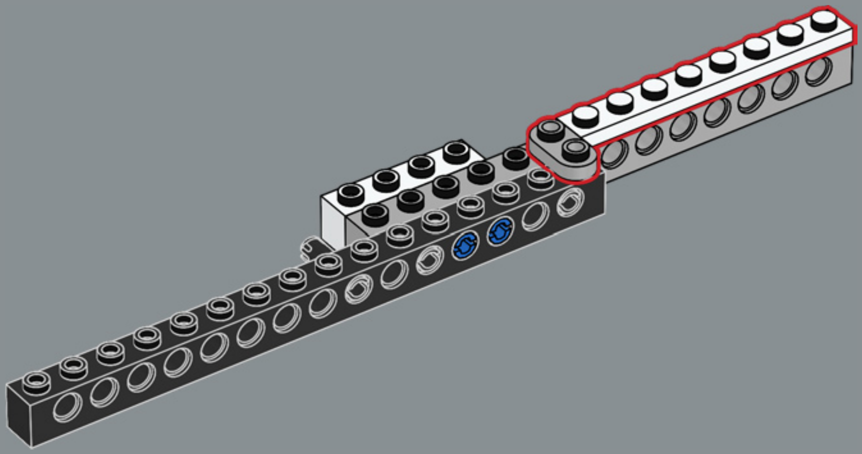

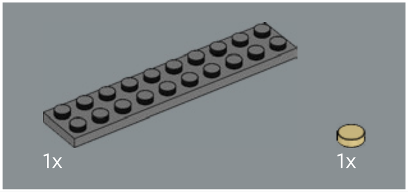

31

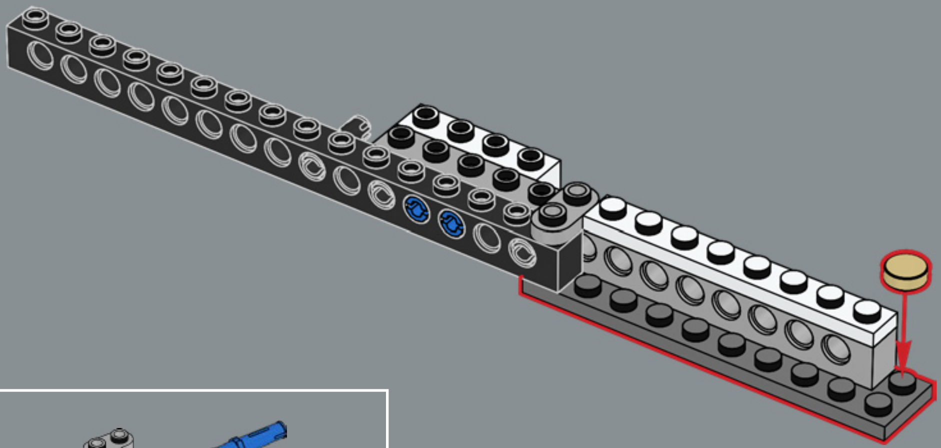

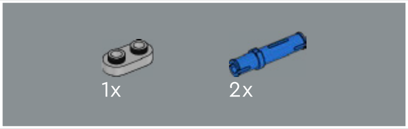

32

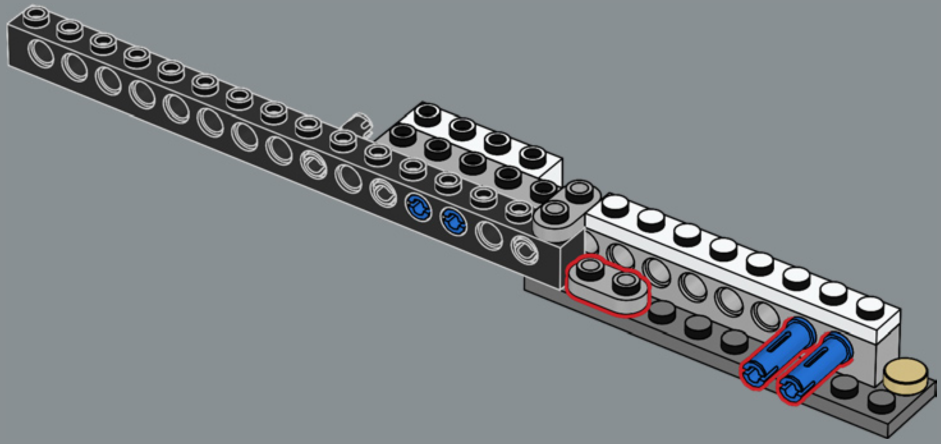

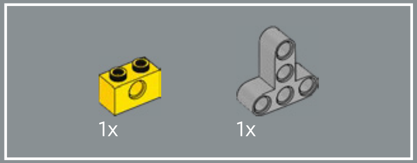

33

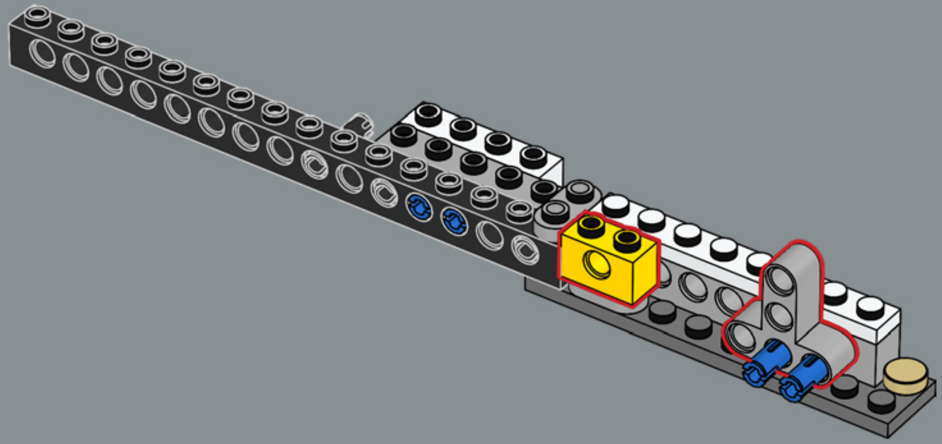

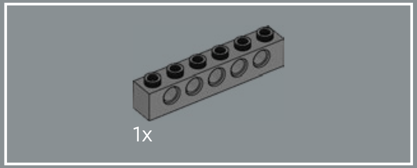

34

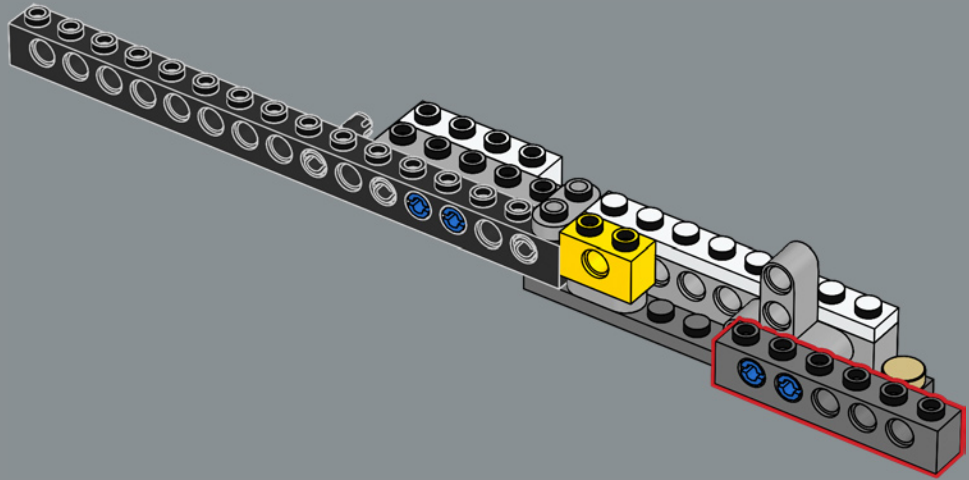

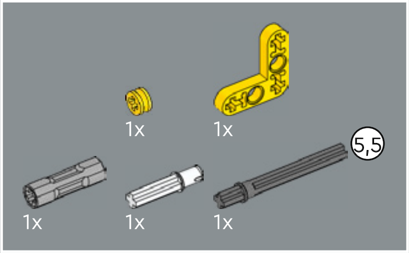
1x
1x
1x
1x
1x
5,5

35

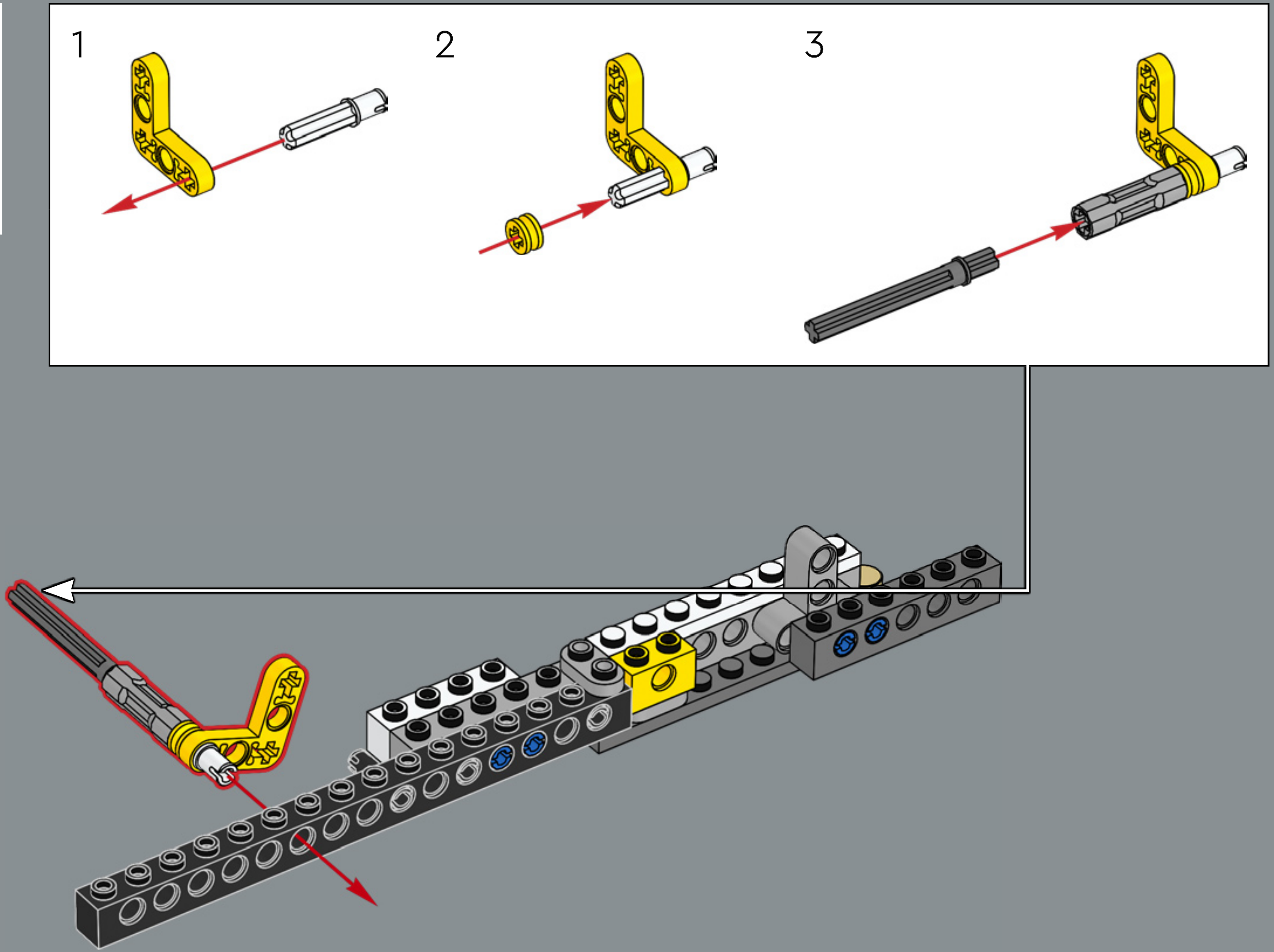

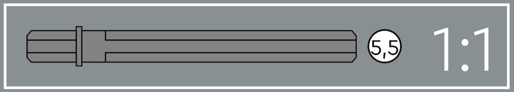

36

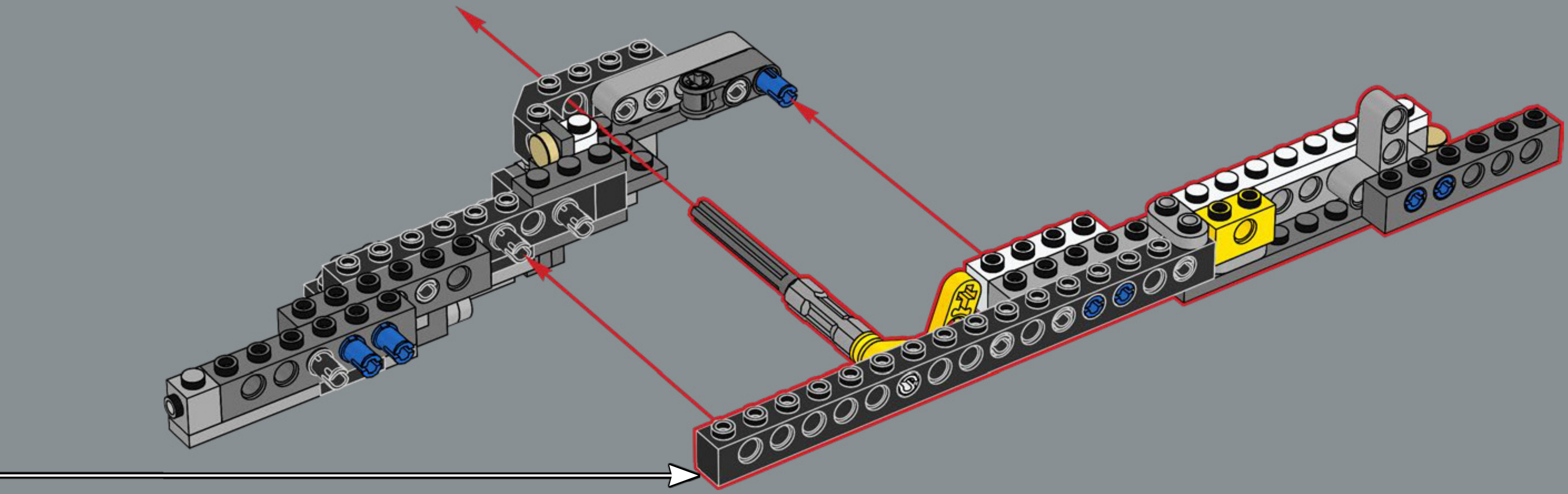

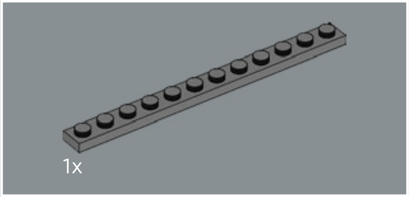

37

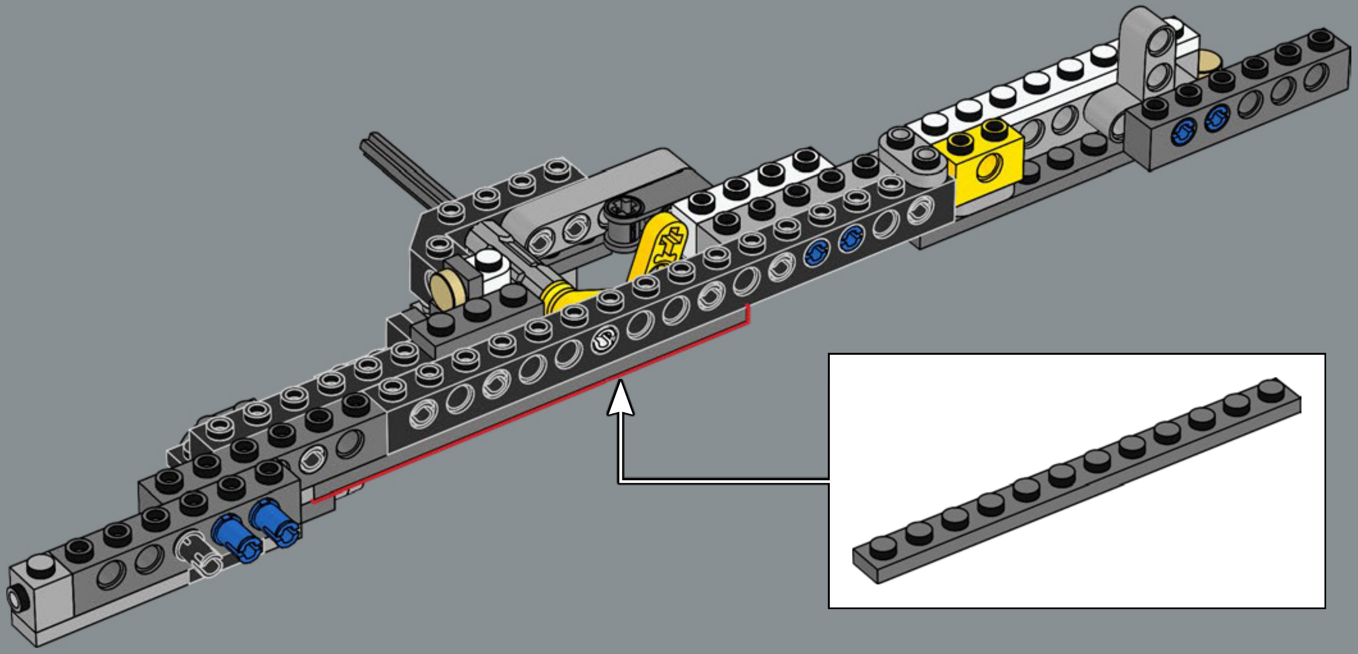

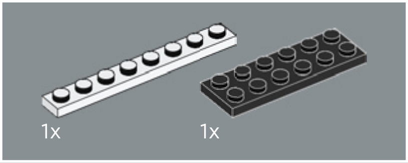

38

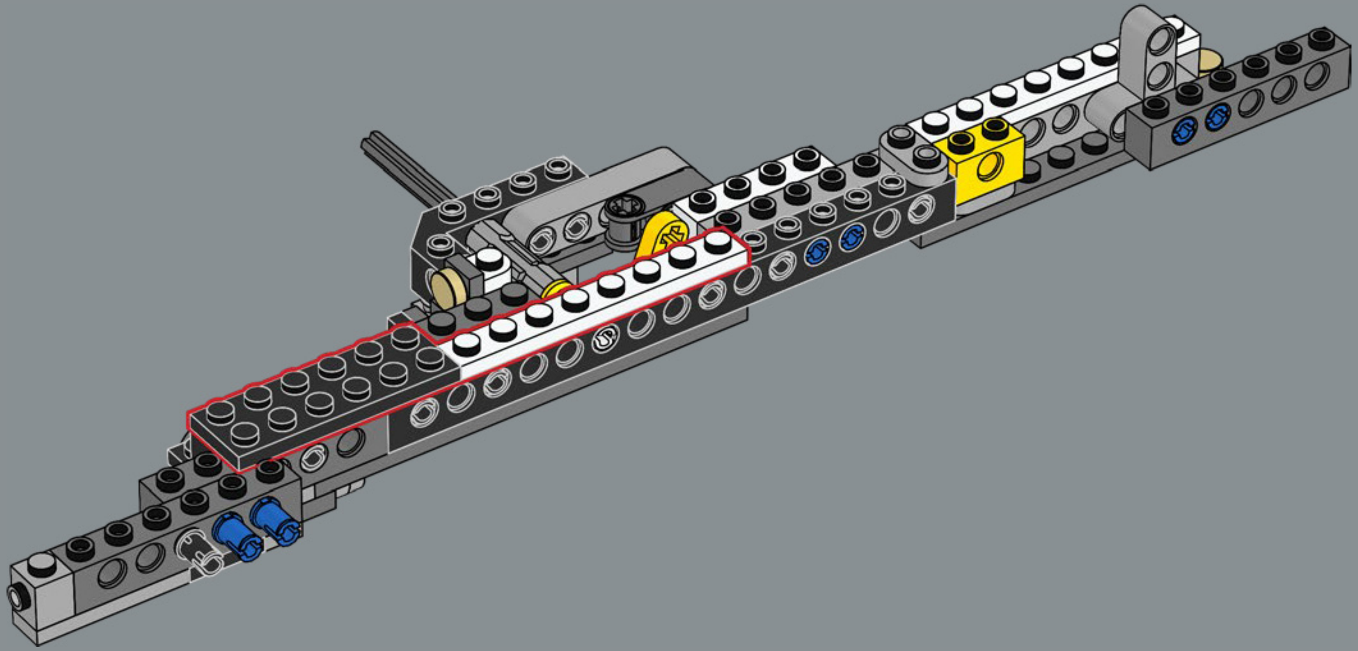

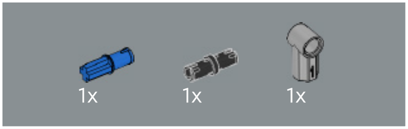

39

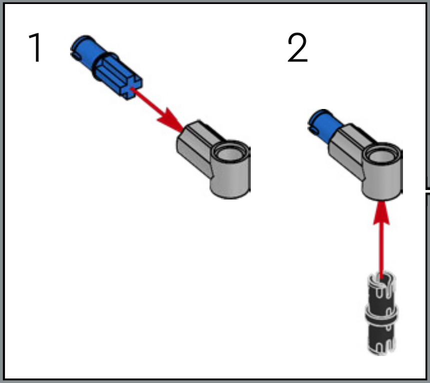

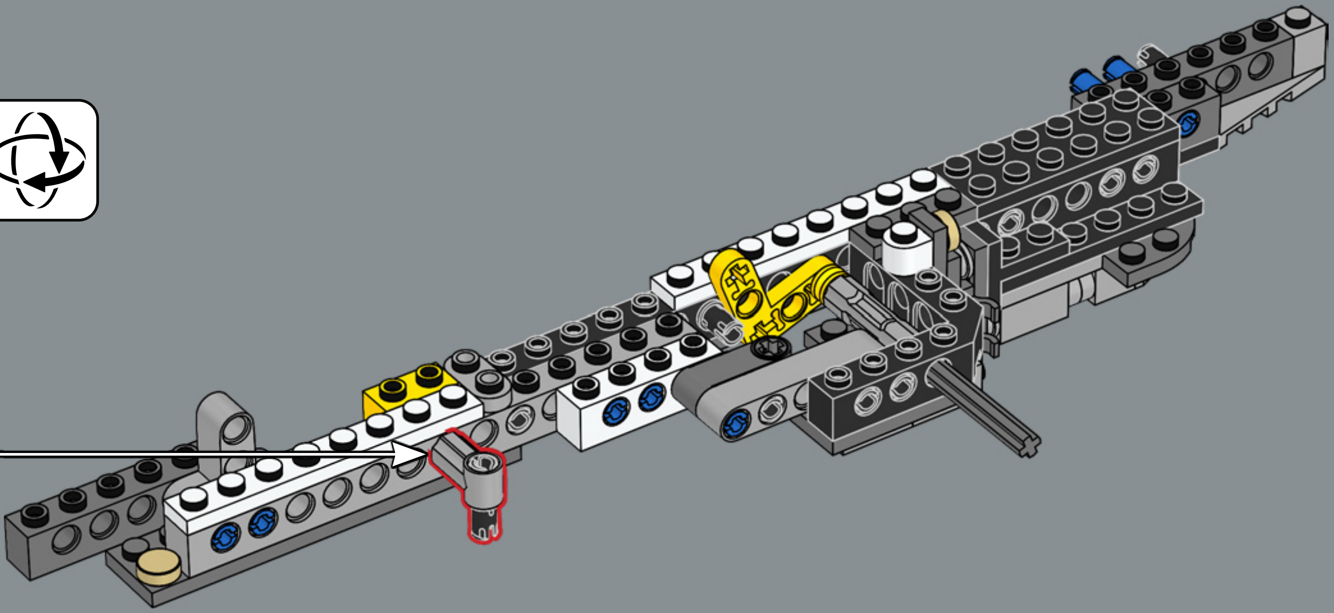

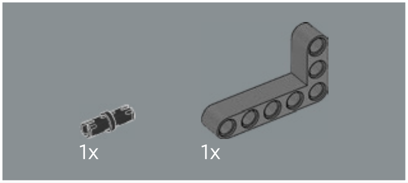

40

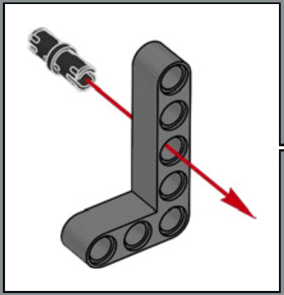

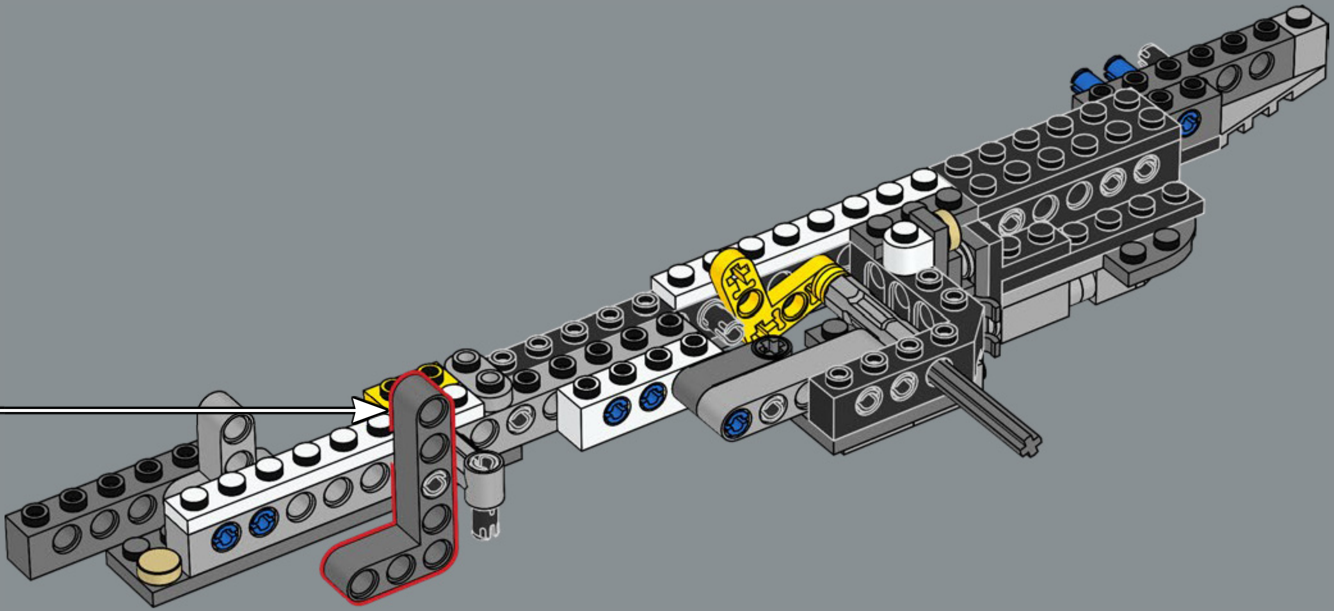

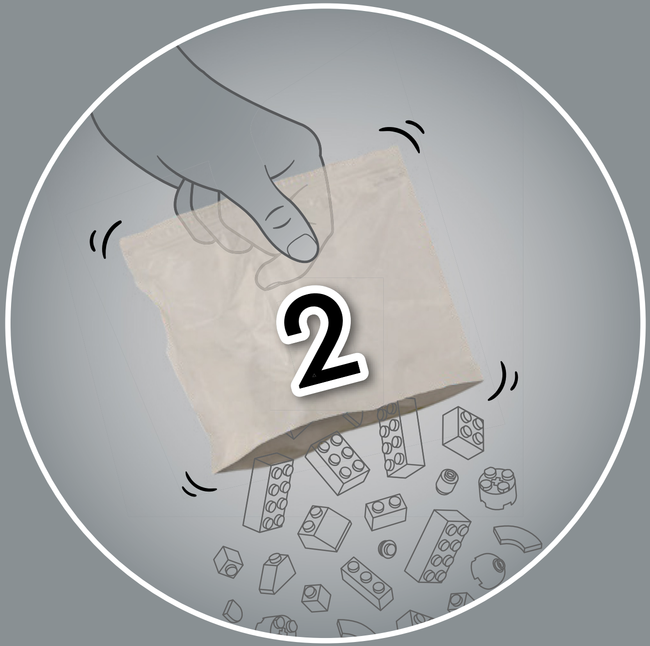

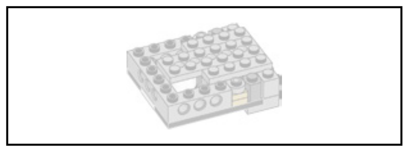

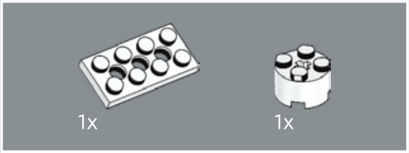

41

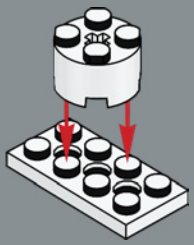

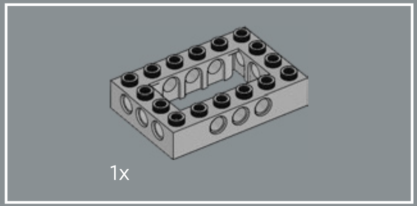

42

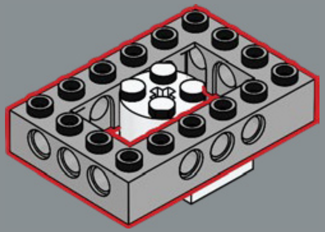

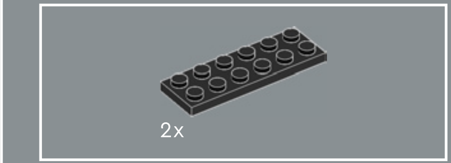

43

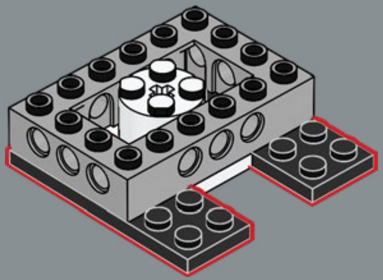

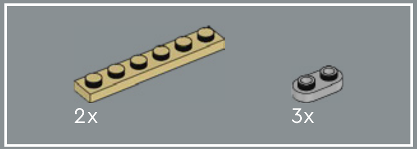

44

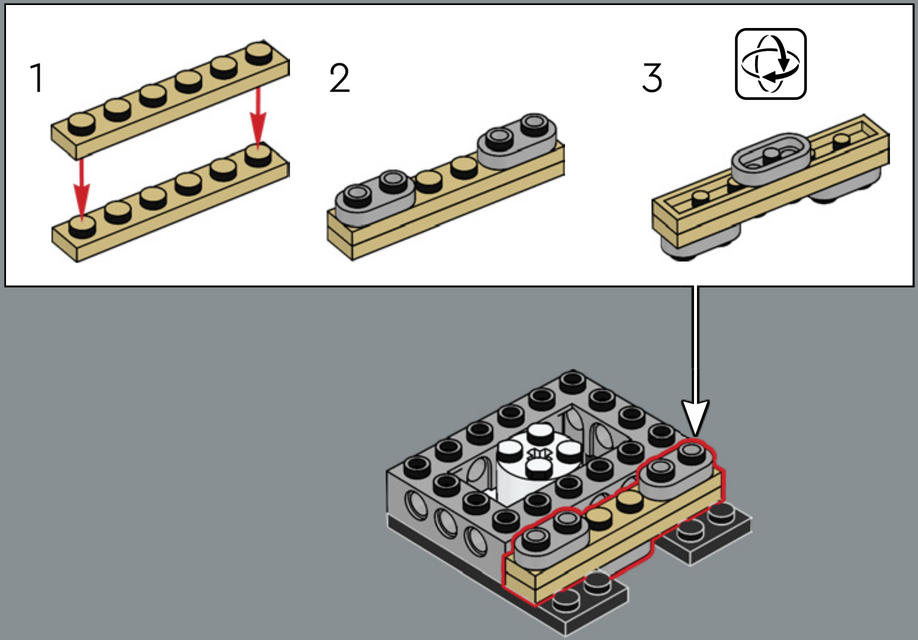

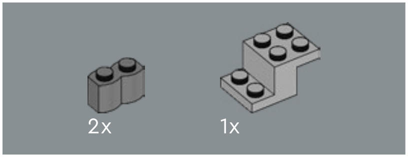

45

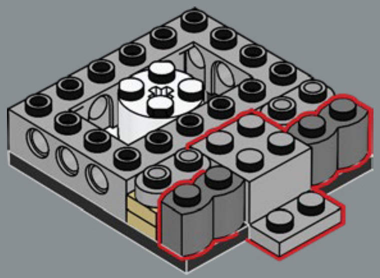

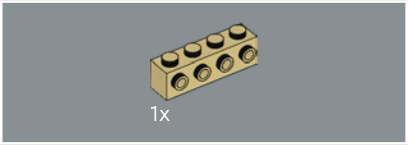

46

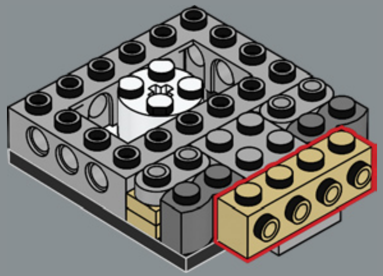

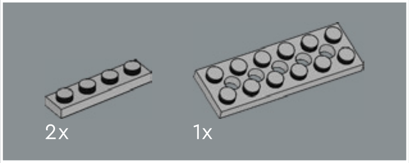

47

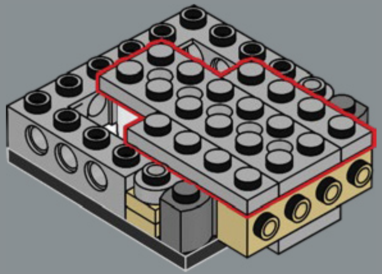

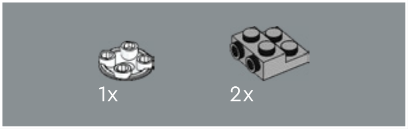

48

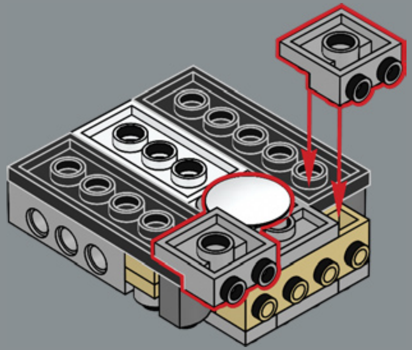

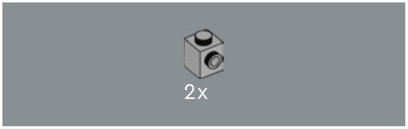

49

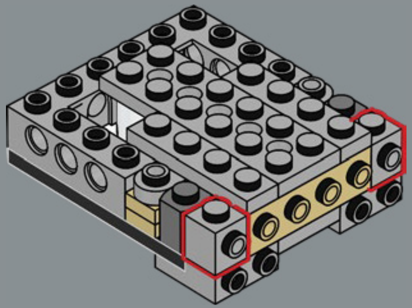

50

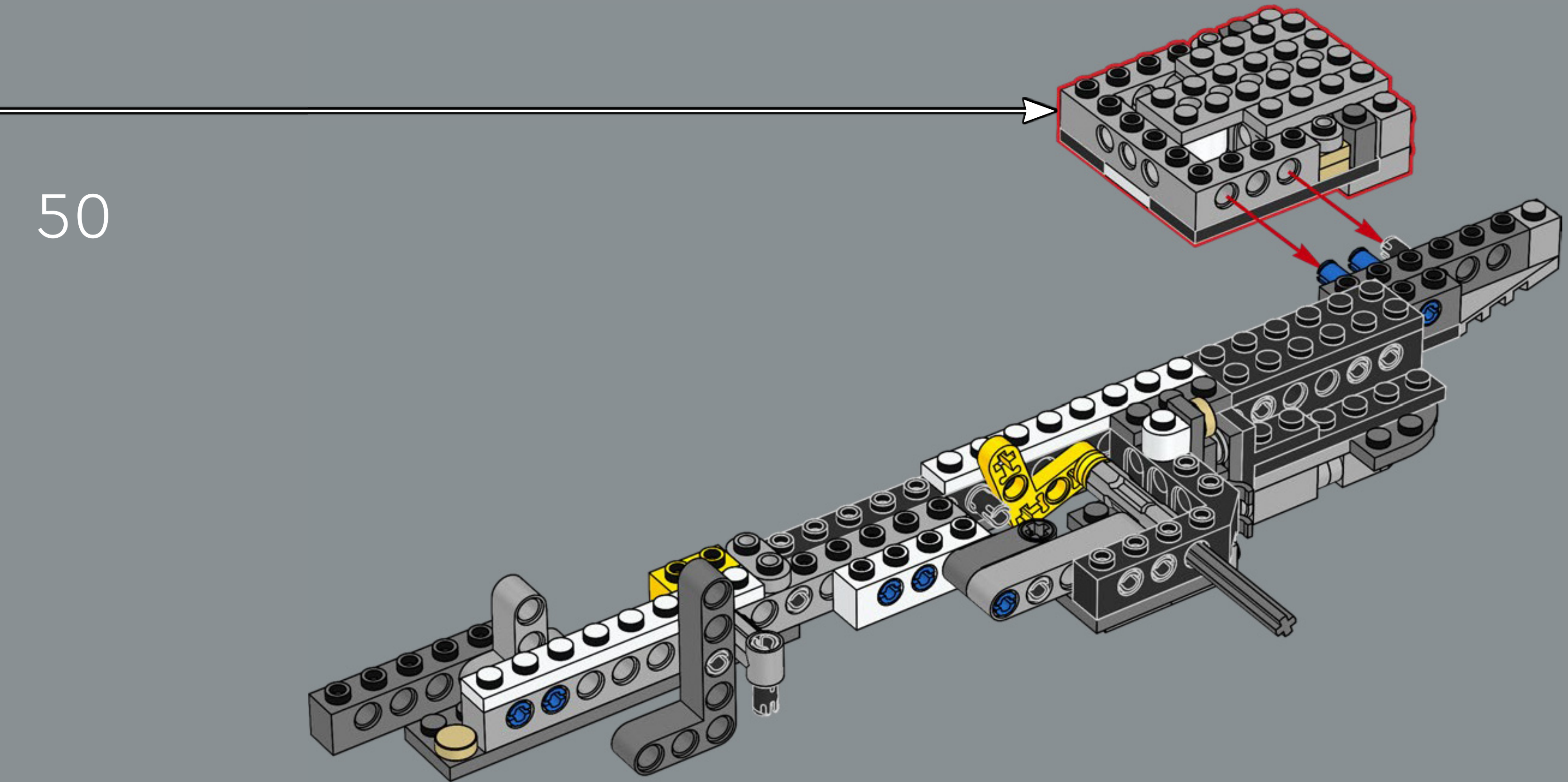

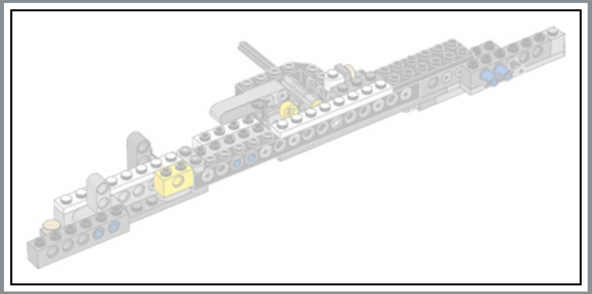

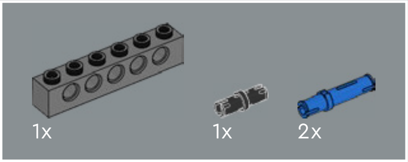

51

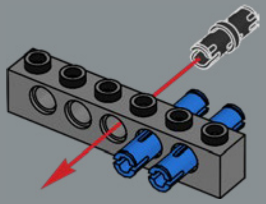

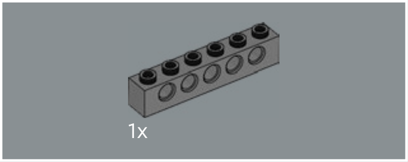

52

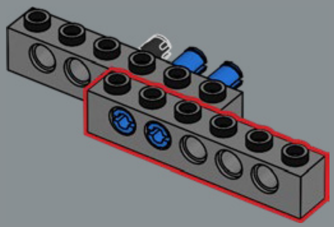

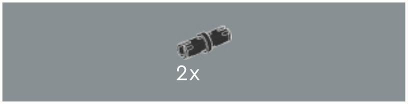

53

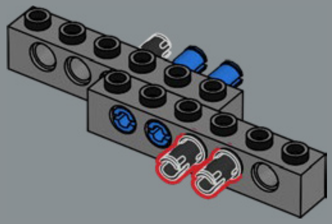

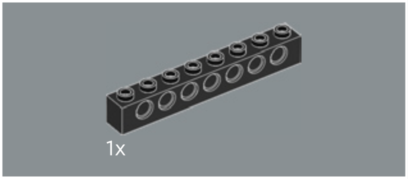

54

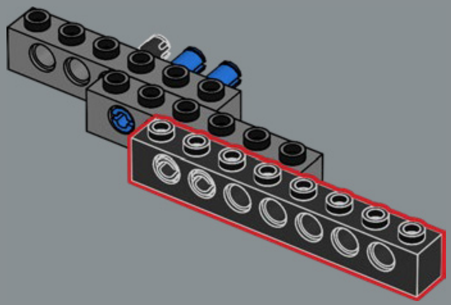

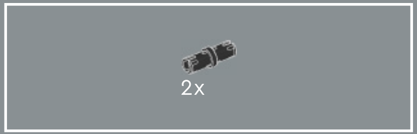

55

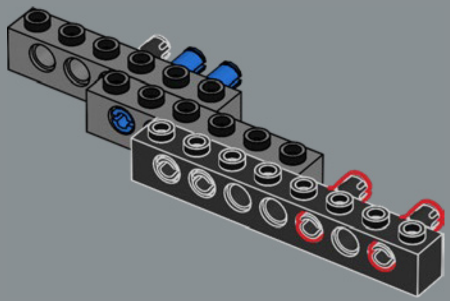

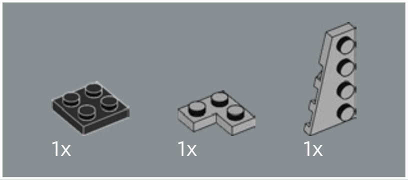

56

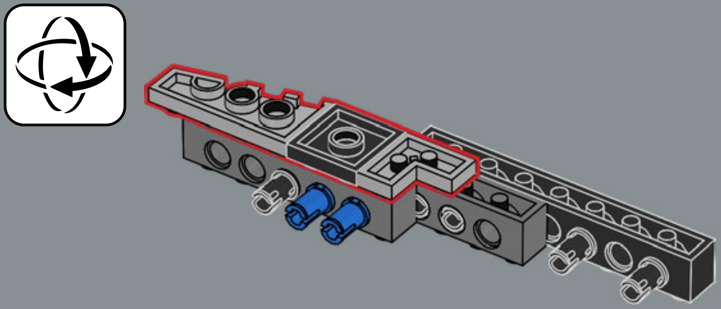

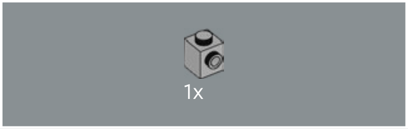

57

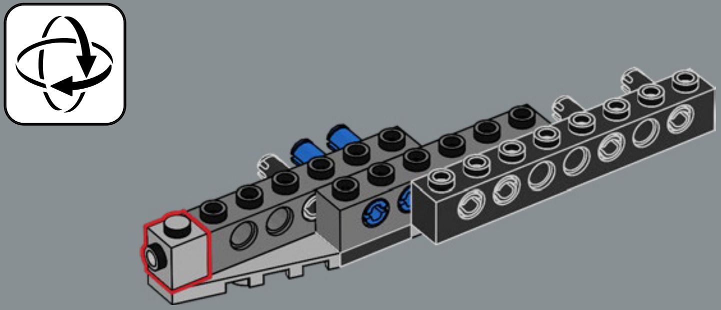

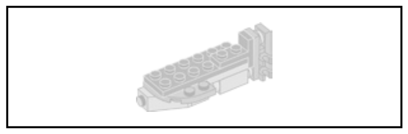

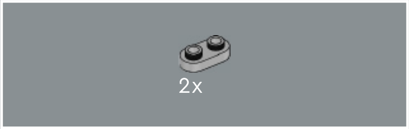

58

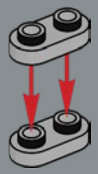

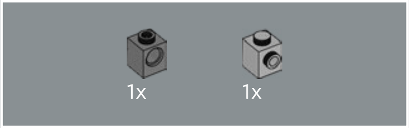

59

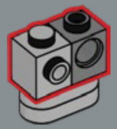

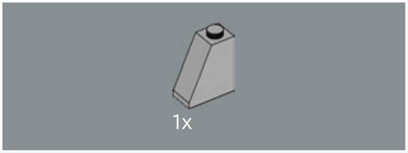

60

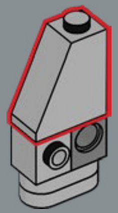

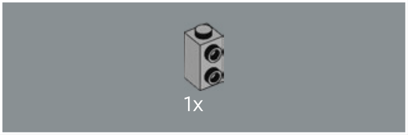

61

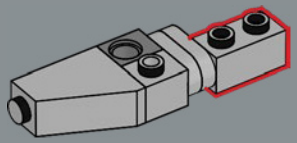

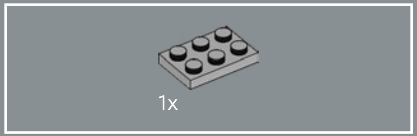

62

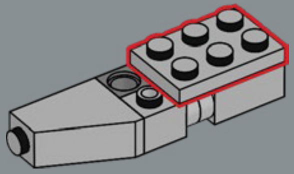

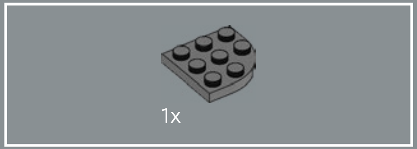

63

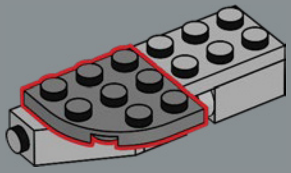

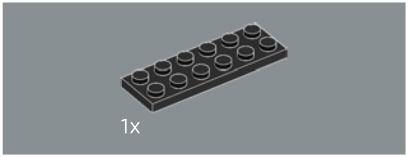

64

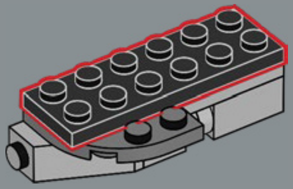

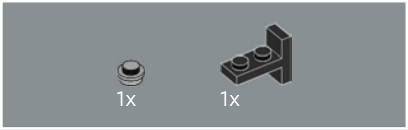

65

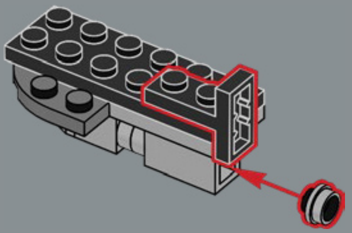

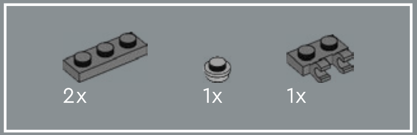

66

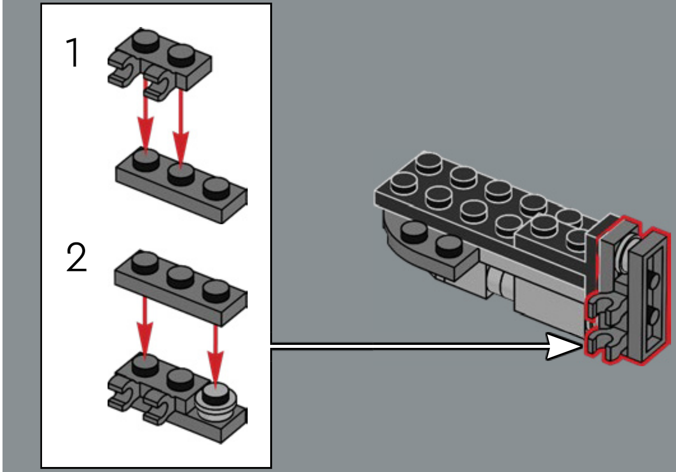

67

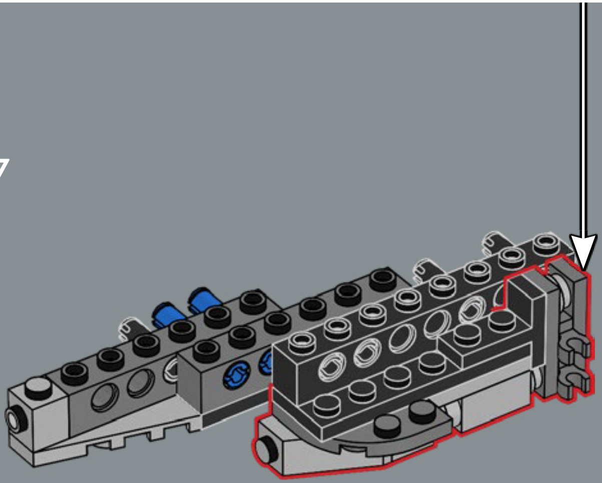

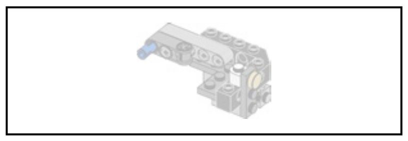

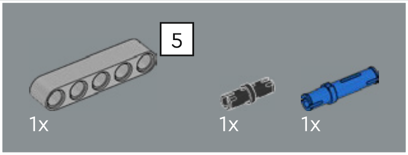

68

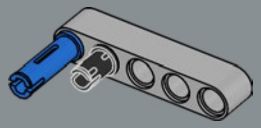

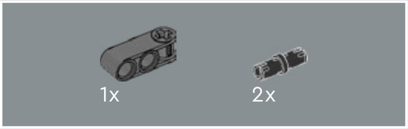

69

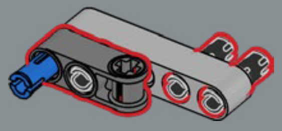

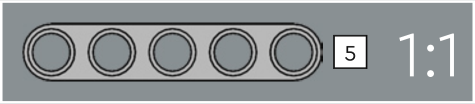

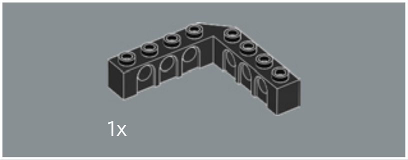

70

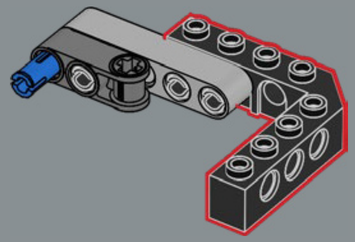

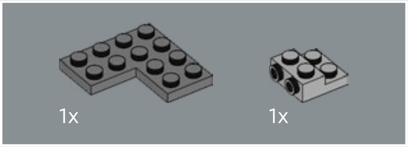

71

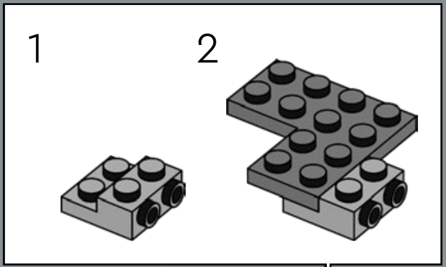

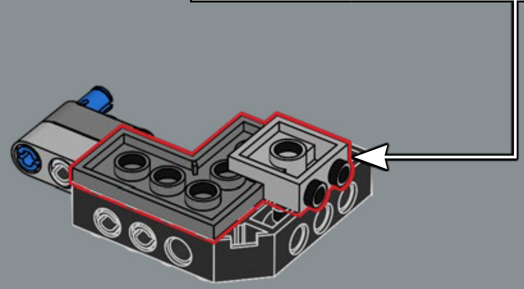

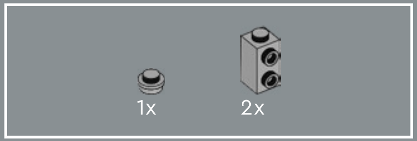

72

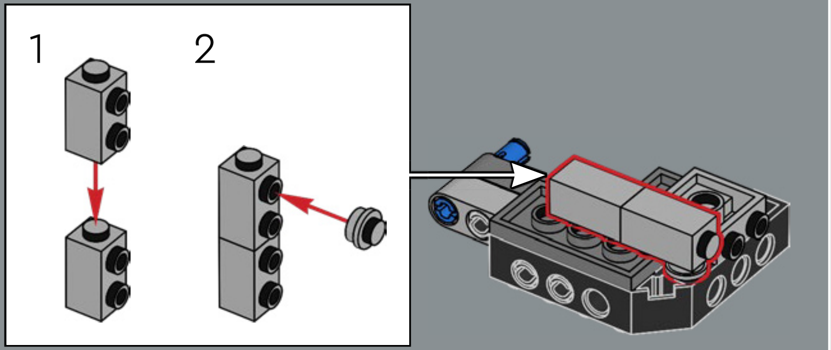

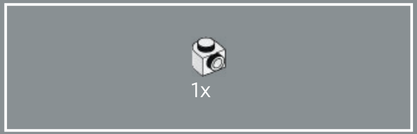

73

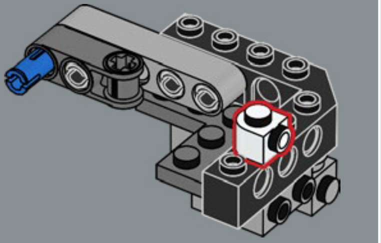

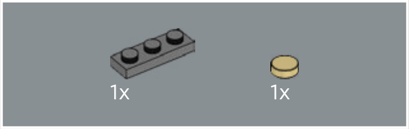

74

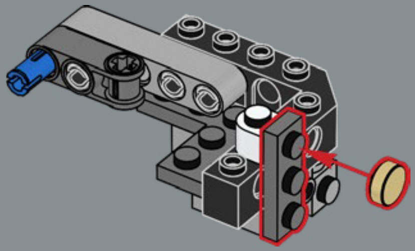

75

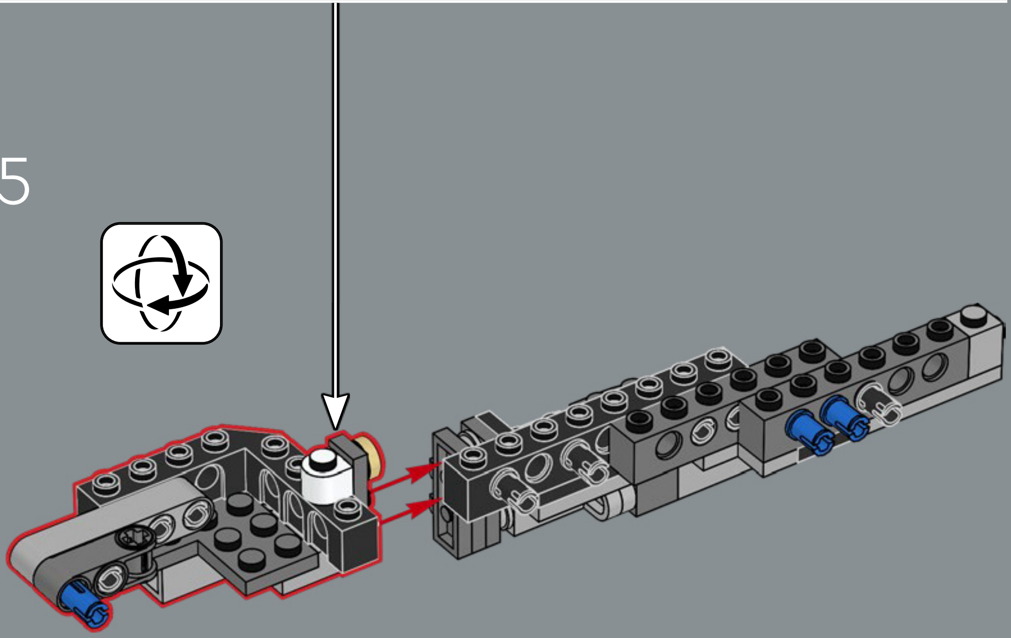

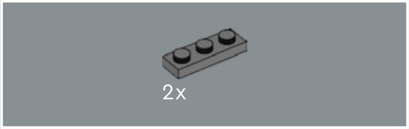

76

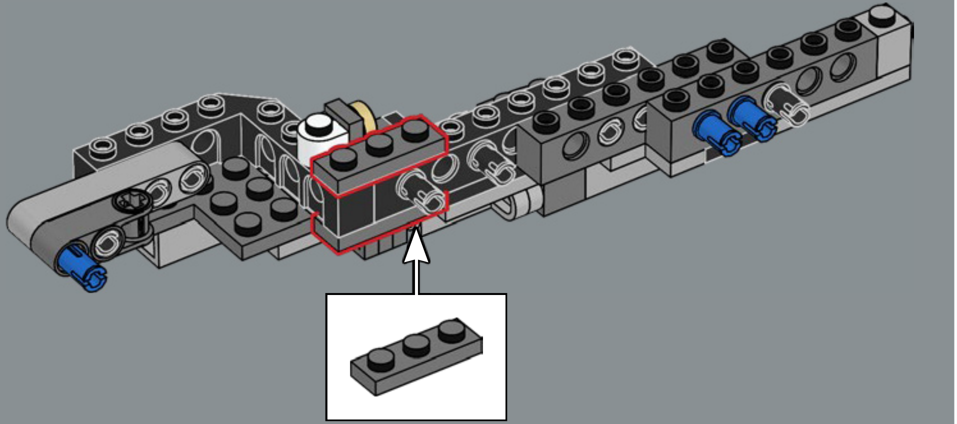

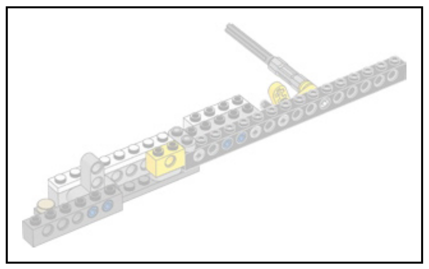

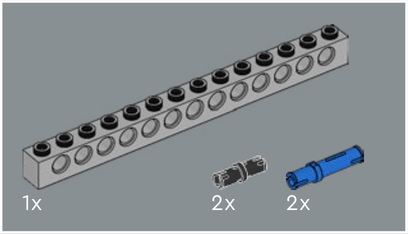

77

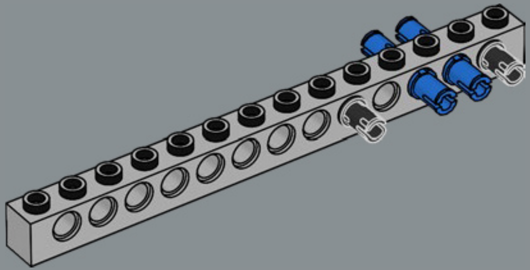

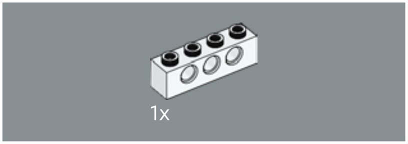

78

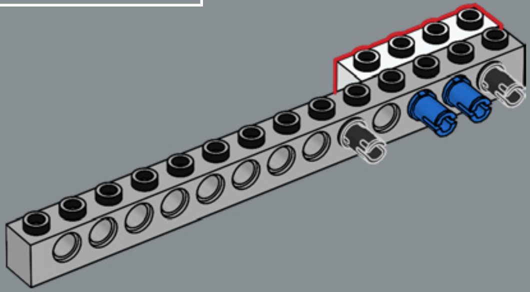

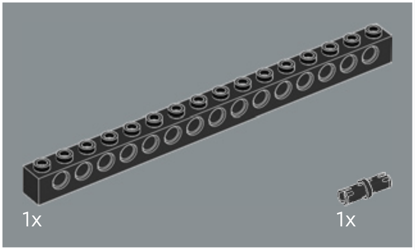

79

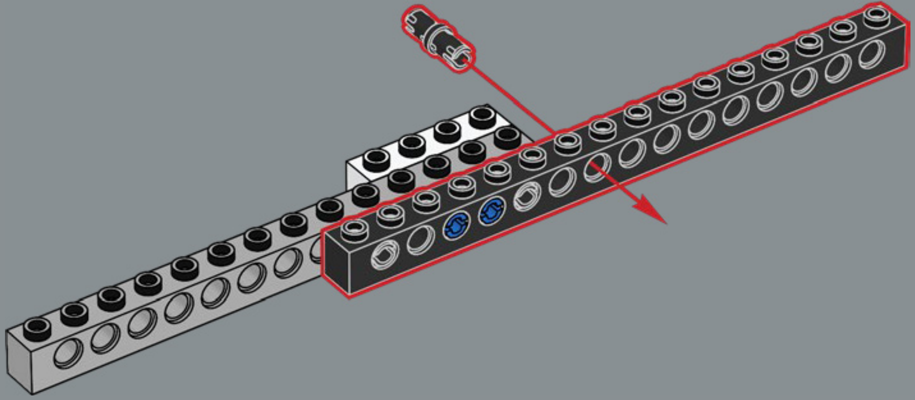

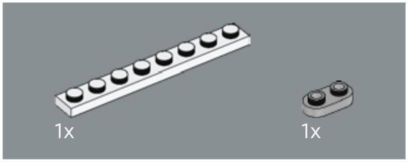

80

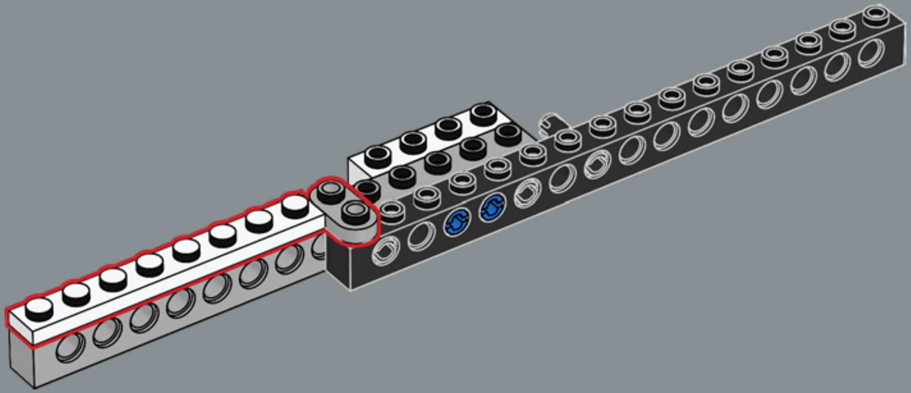

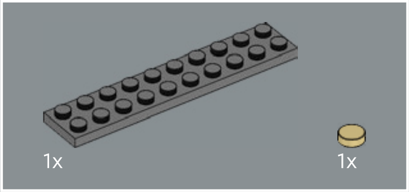

81

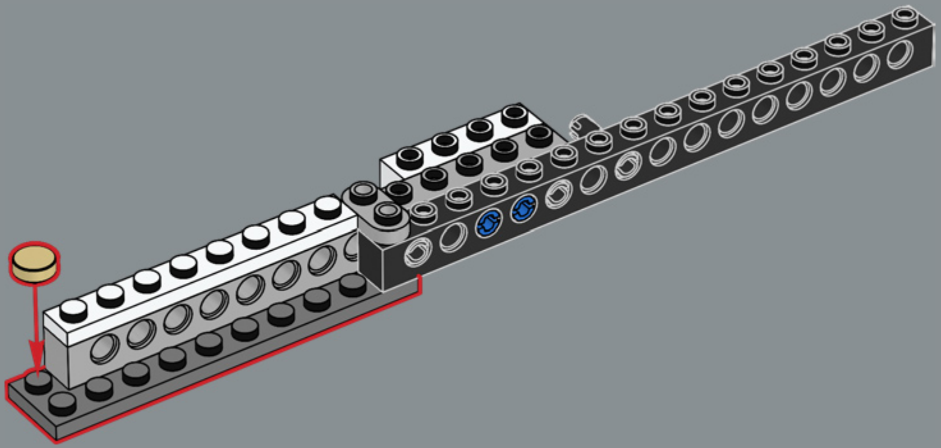

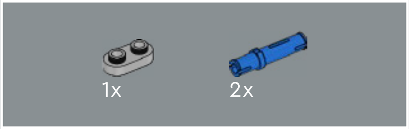

82

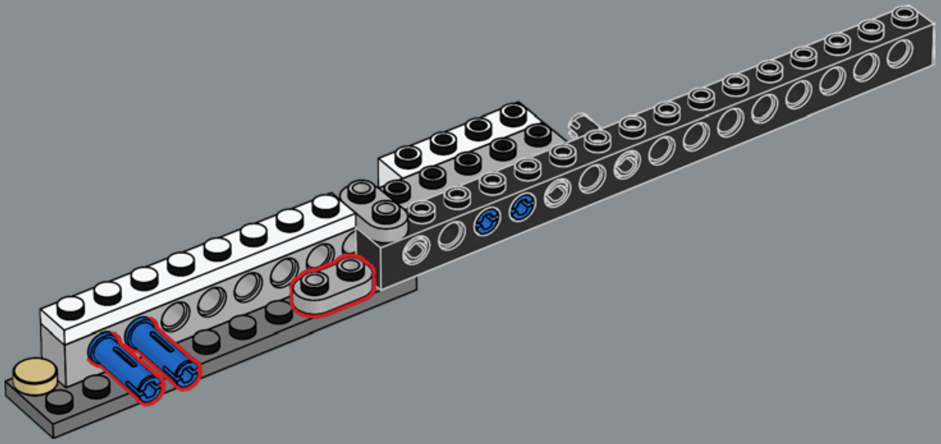

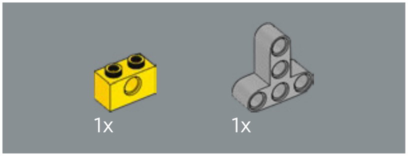

83

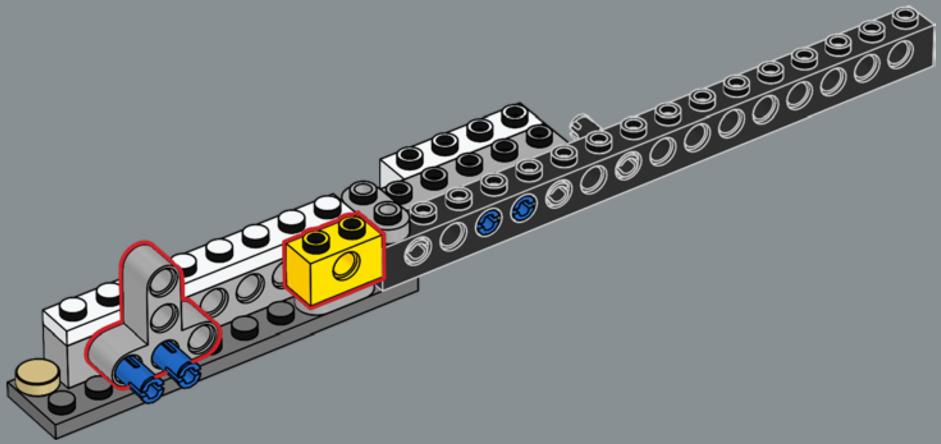

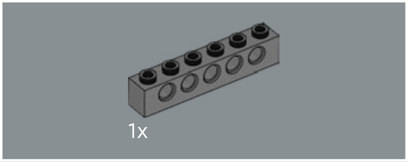

84

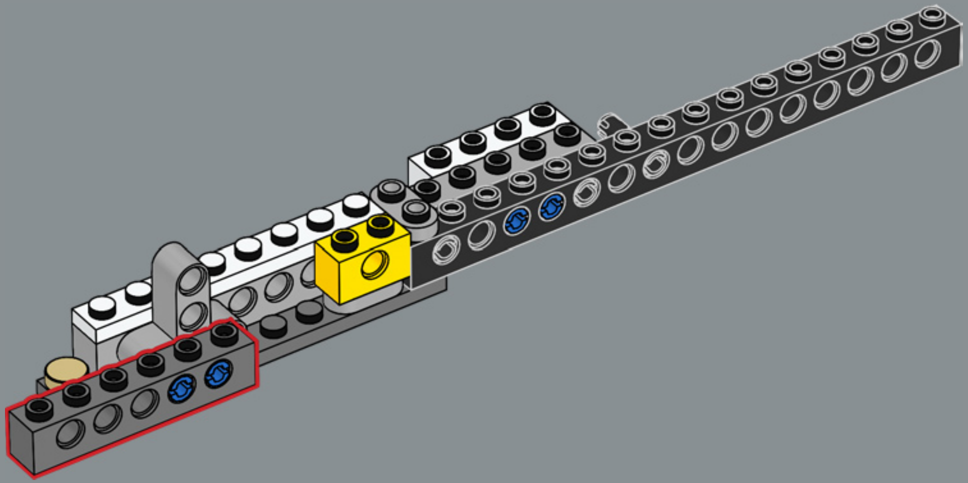

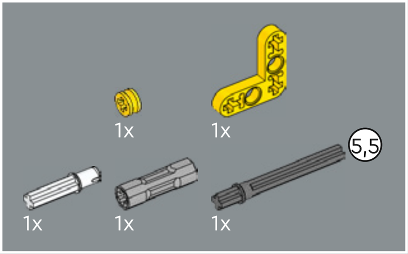
1x
1x
1x
1x
1x
5,5

85

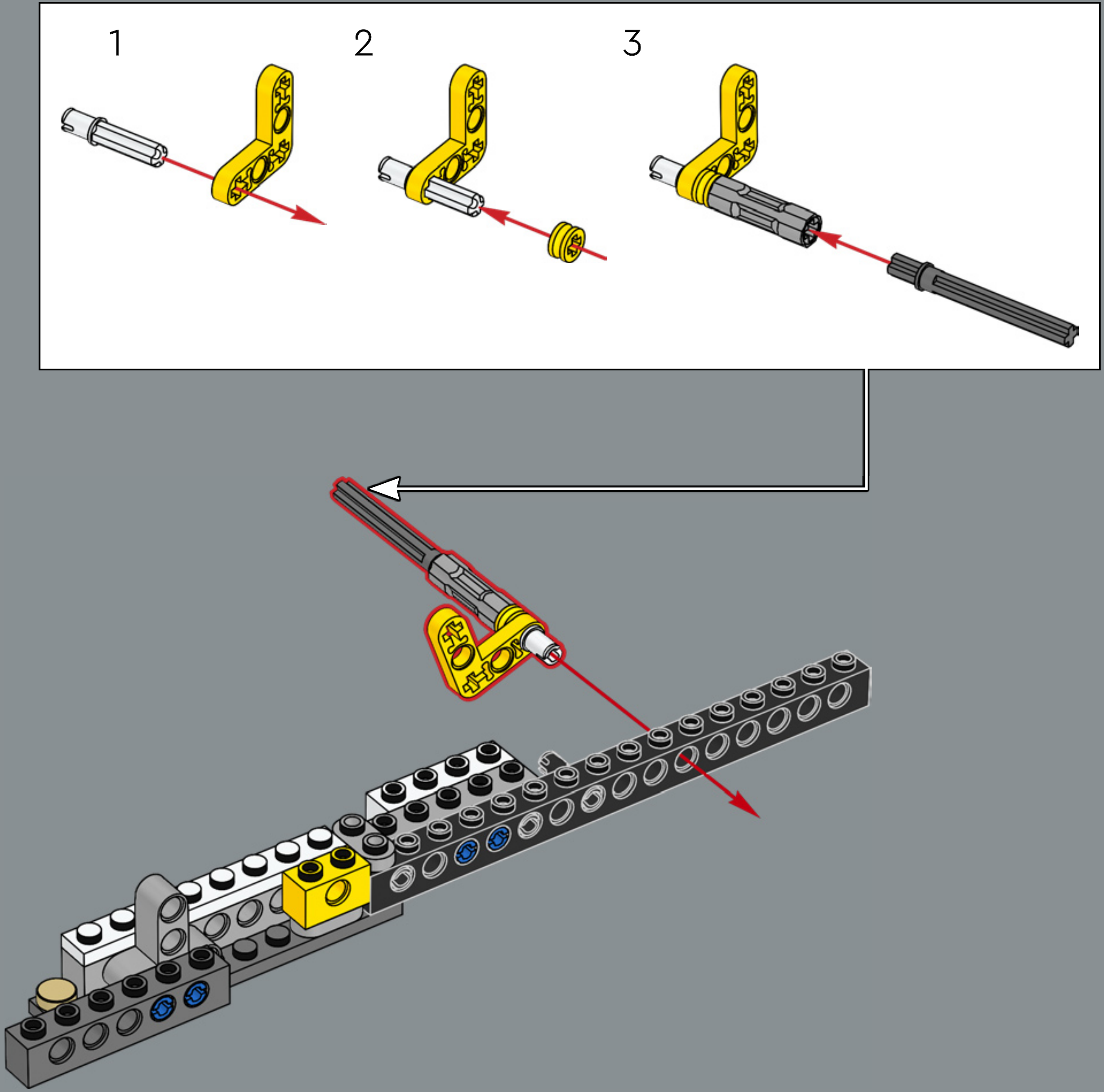

86

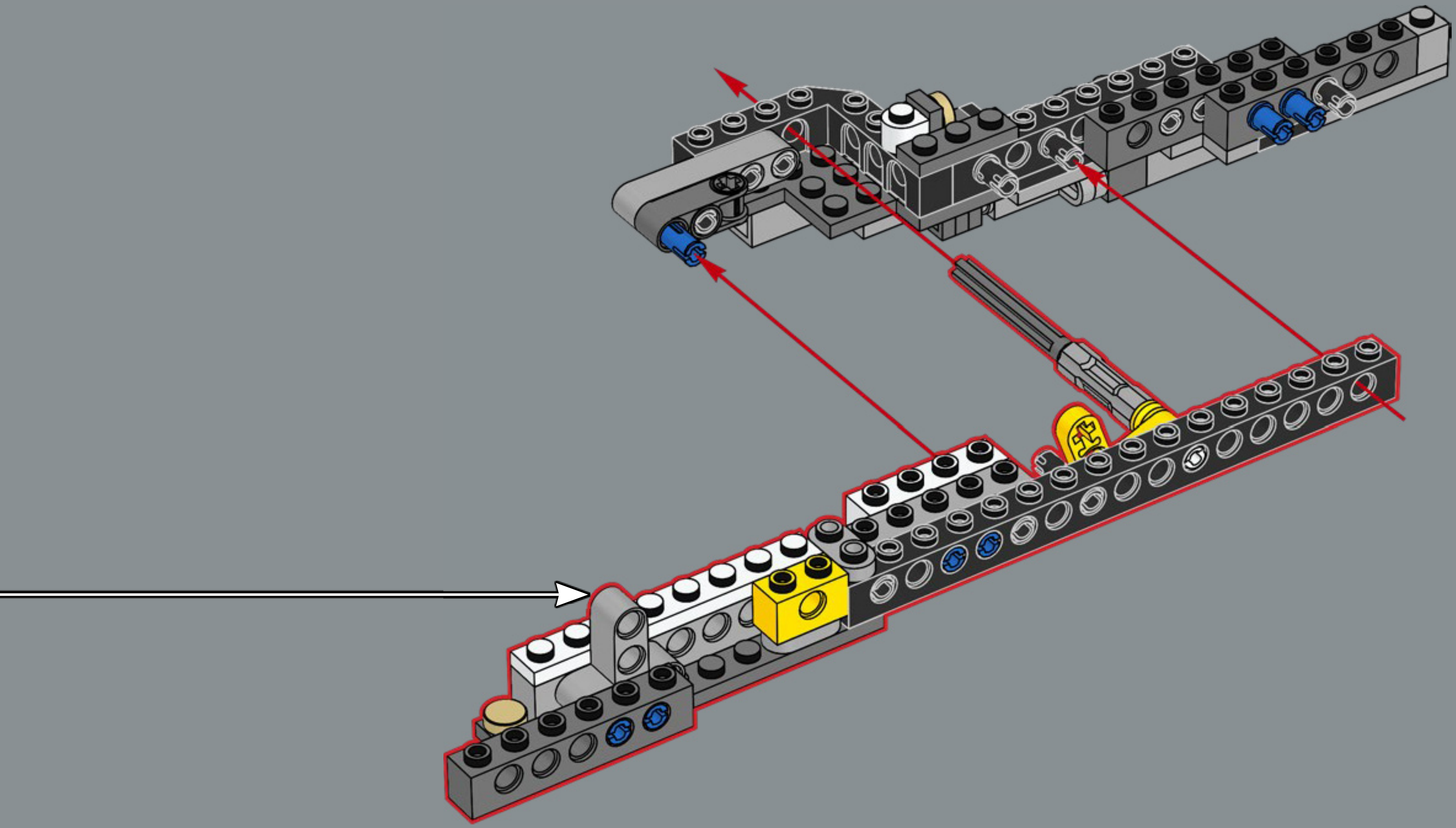

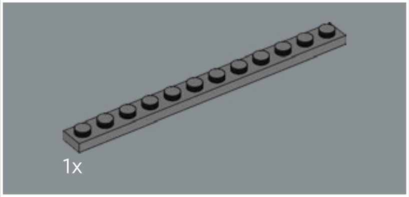

87

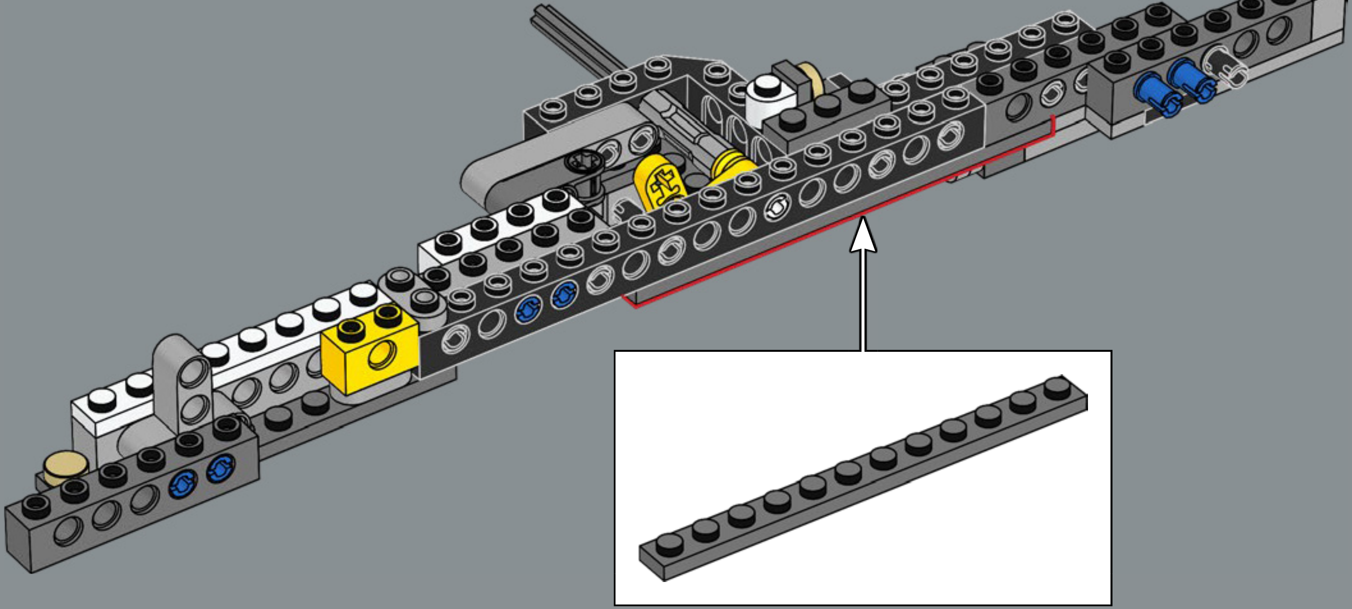

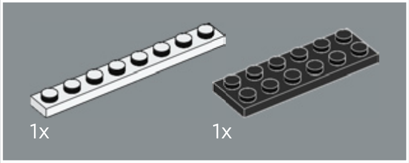

88

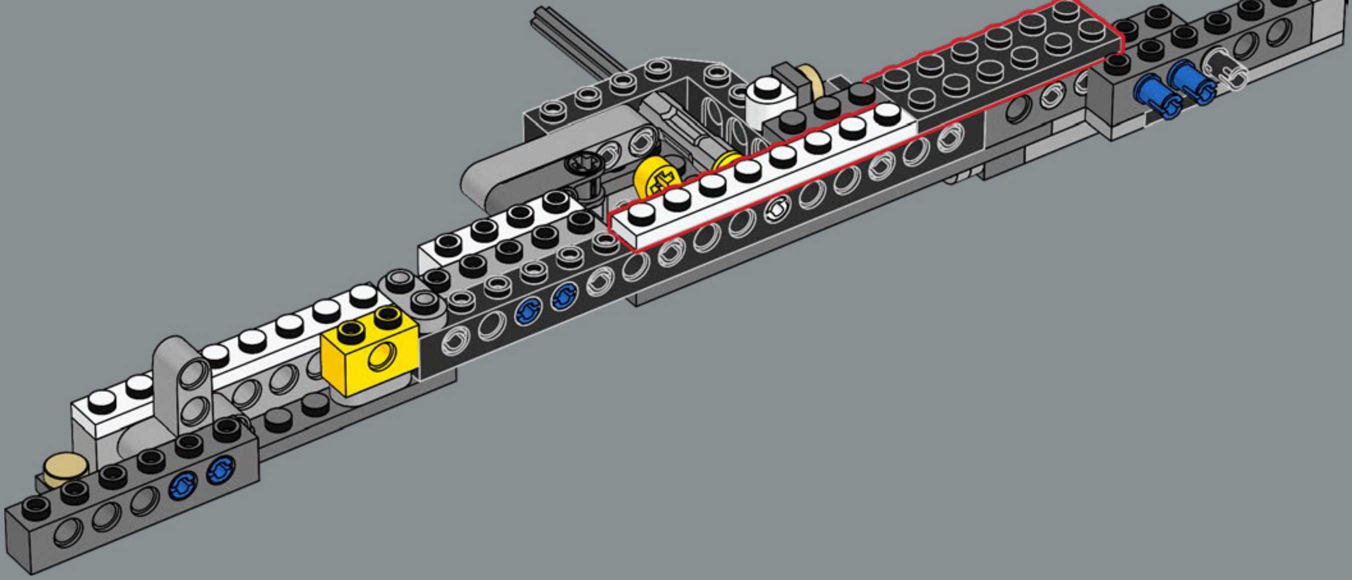

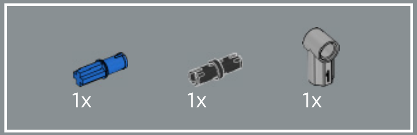

89

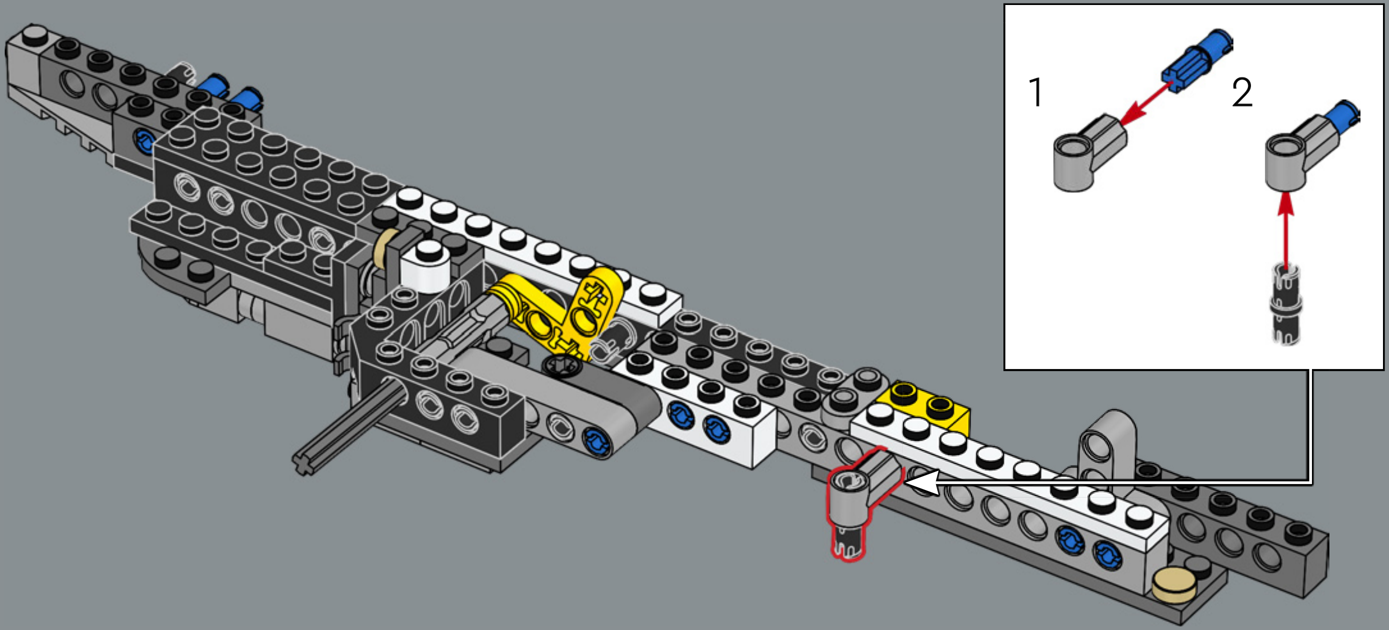

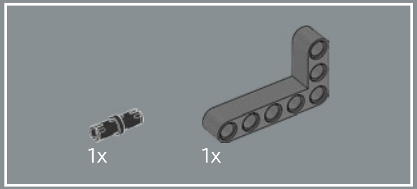

90

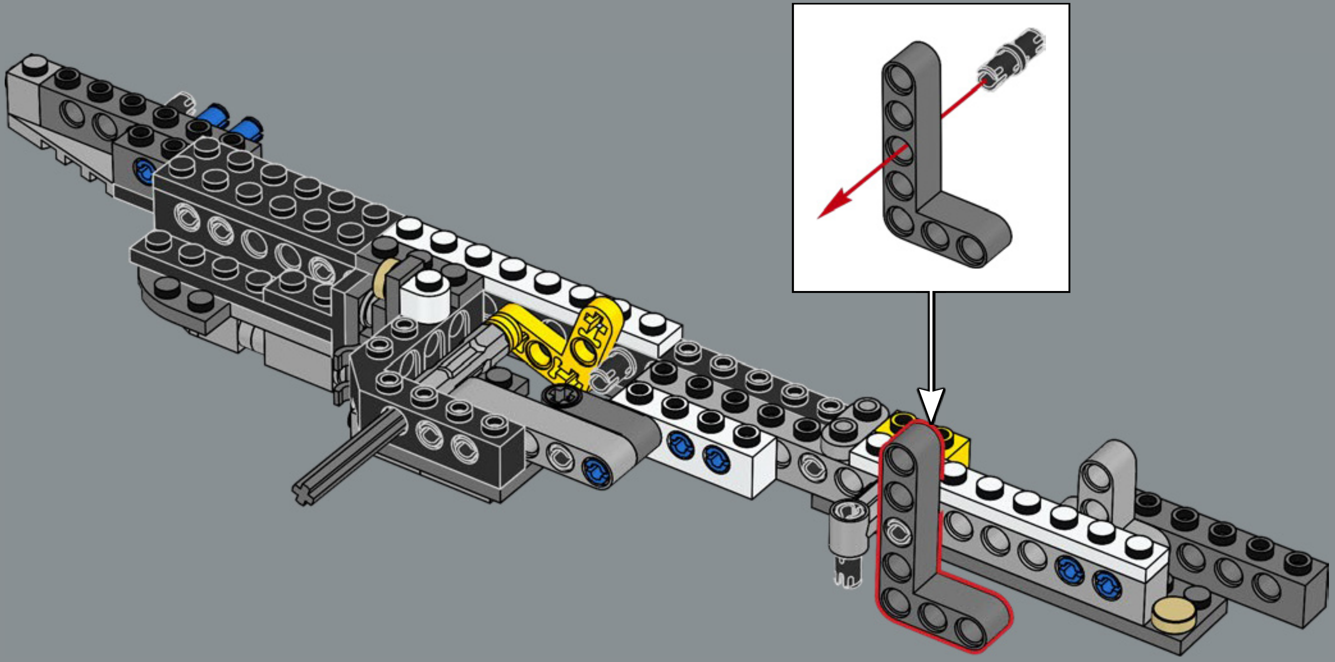

91

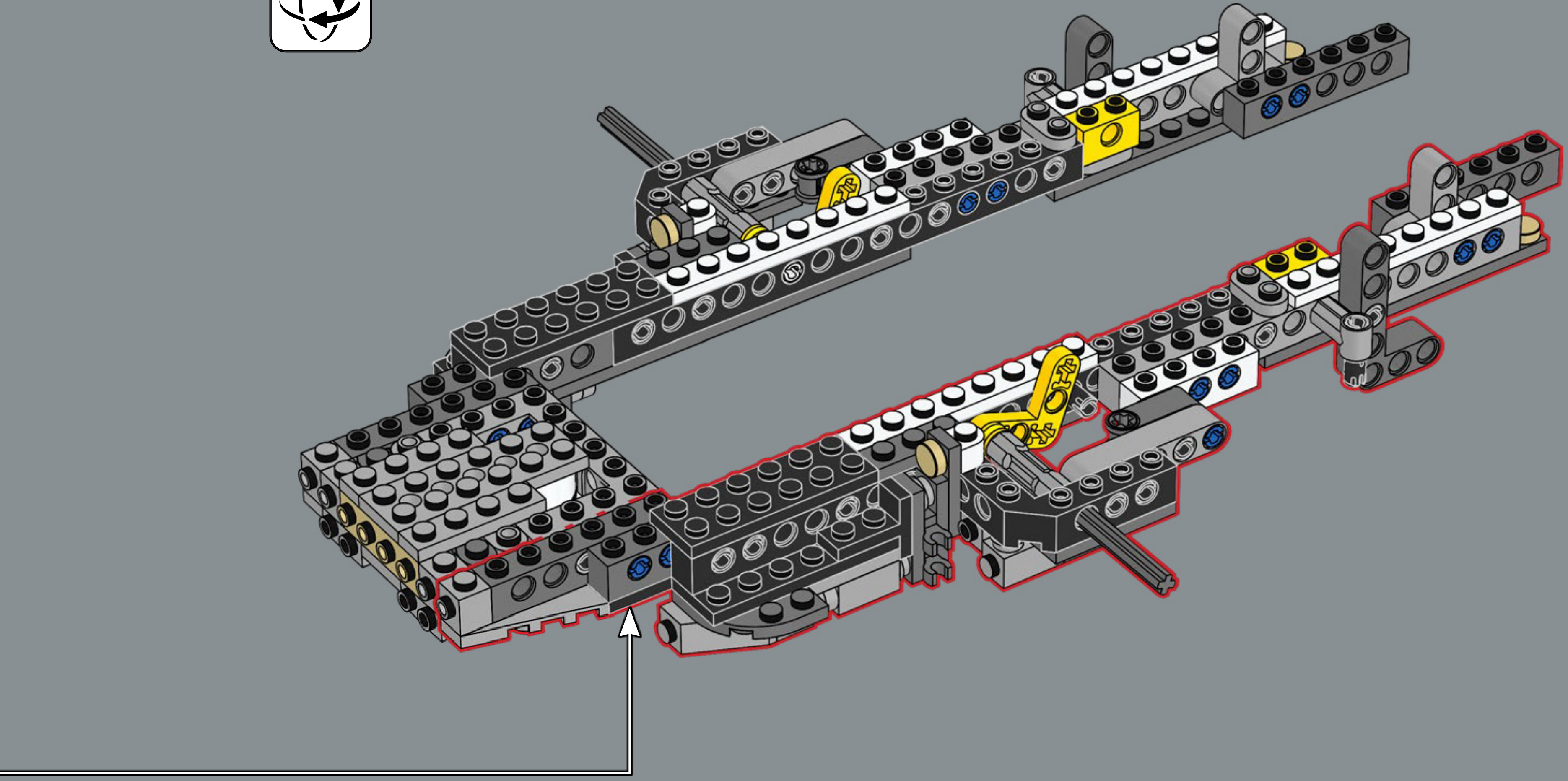

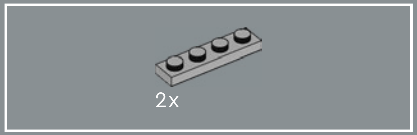

92

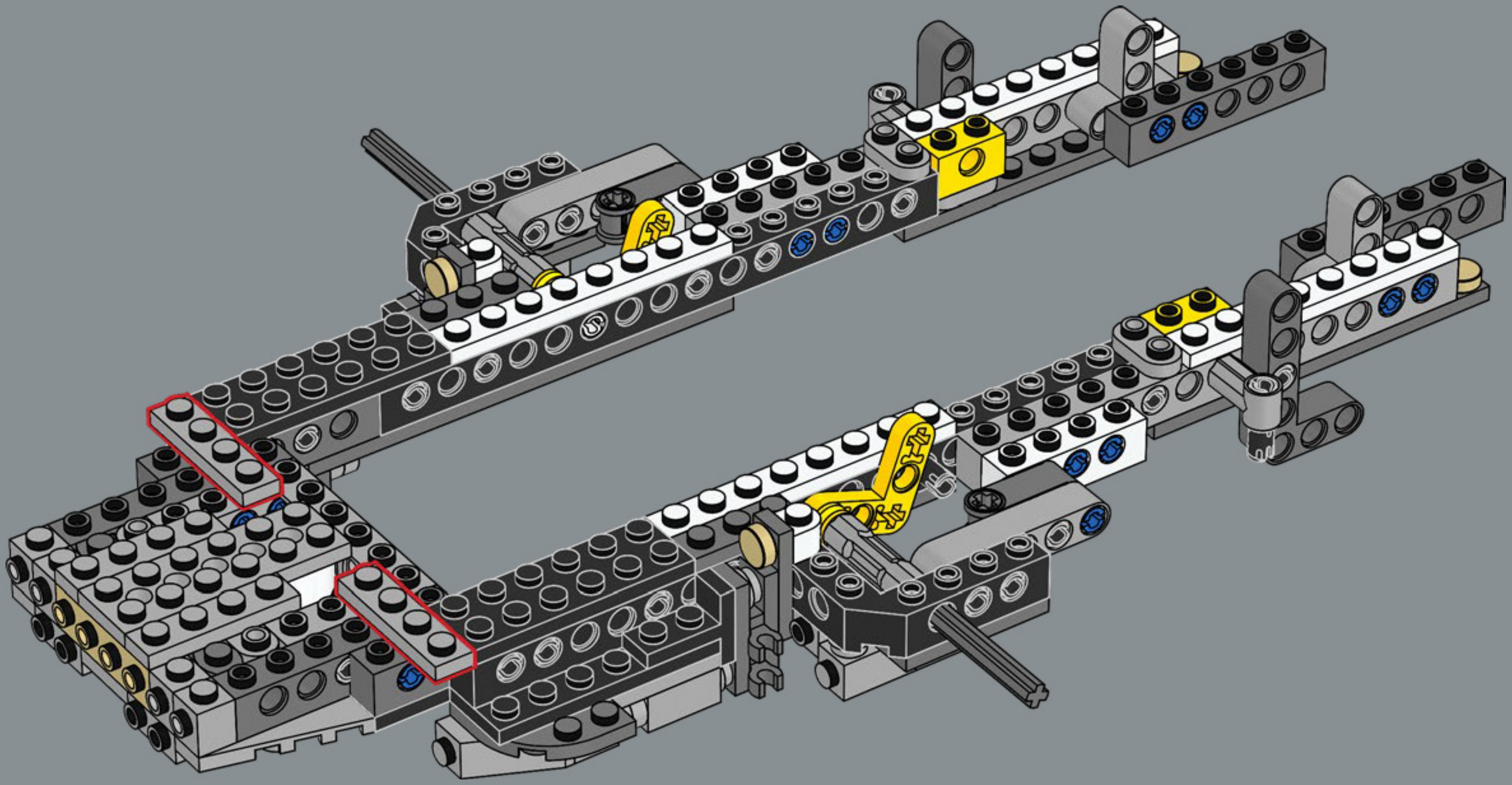

2x

93

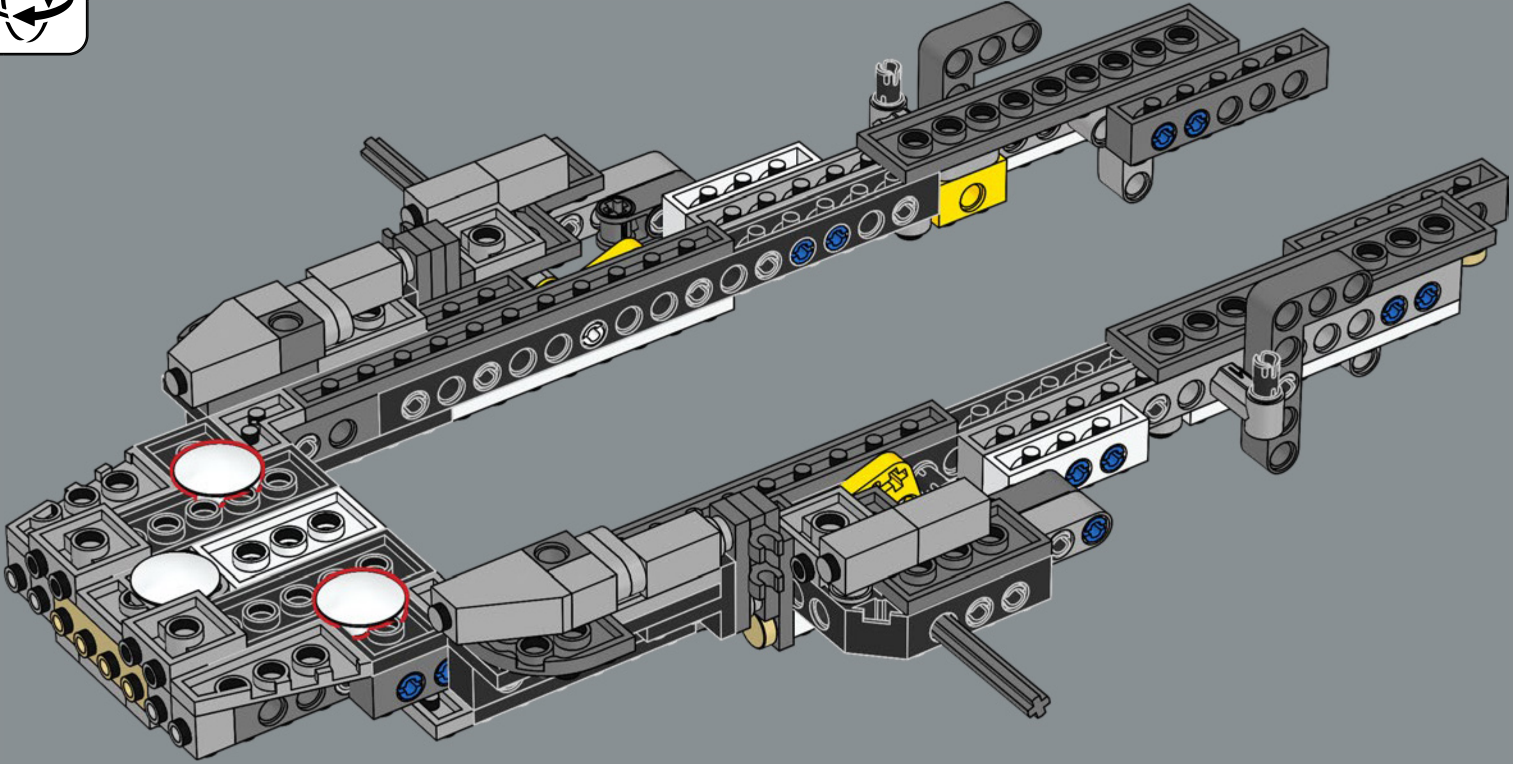

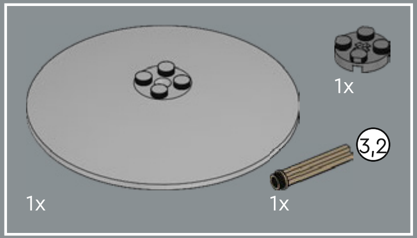

94

1

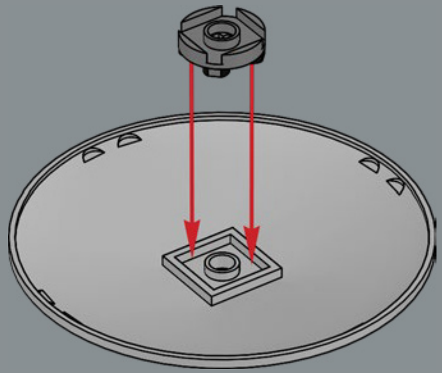

2

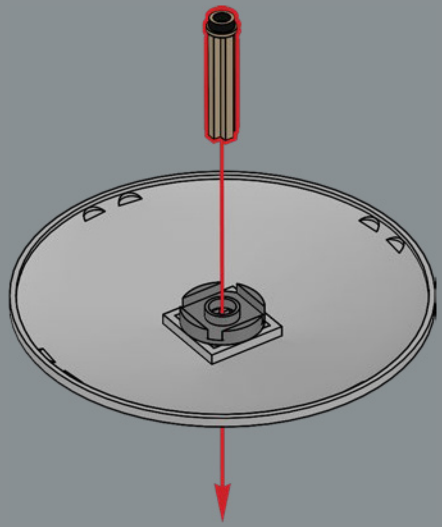

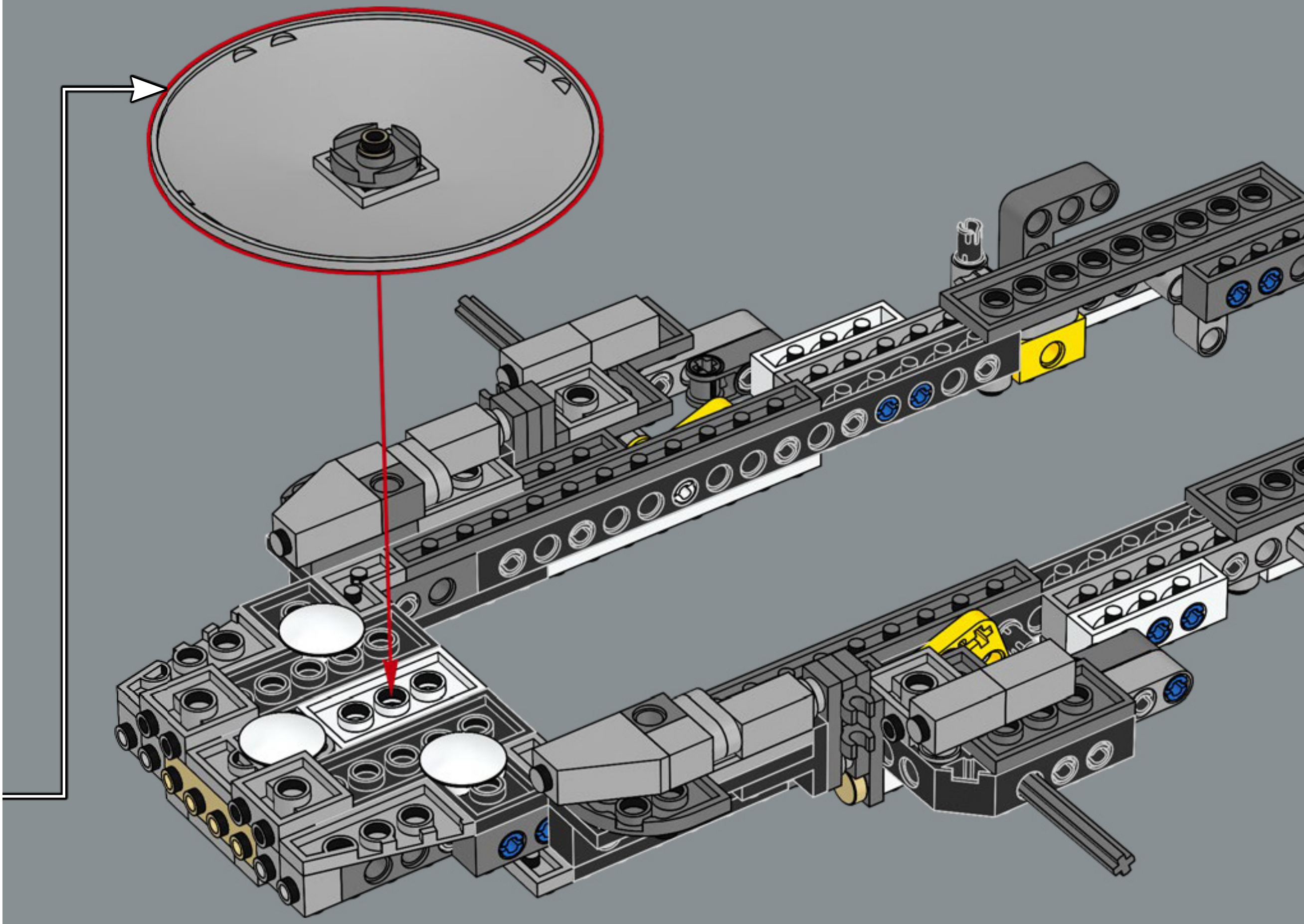

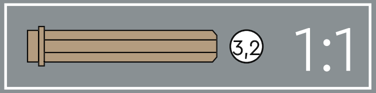

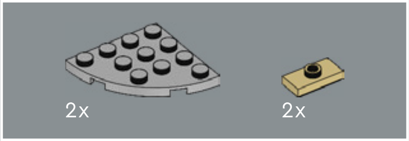

95

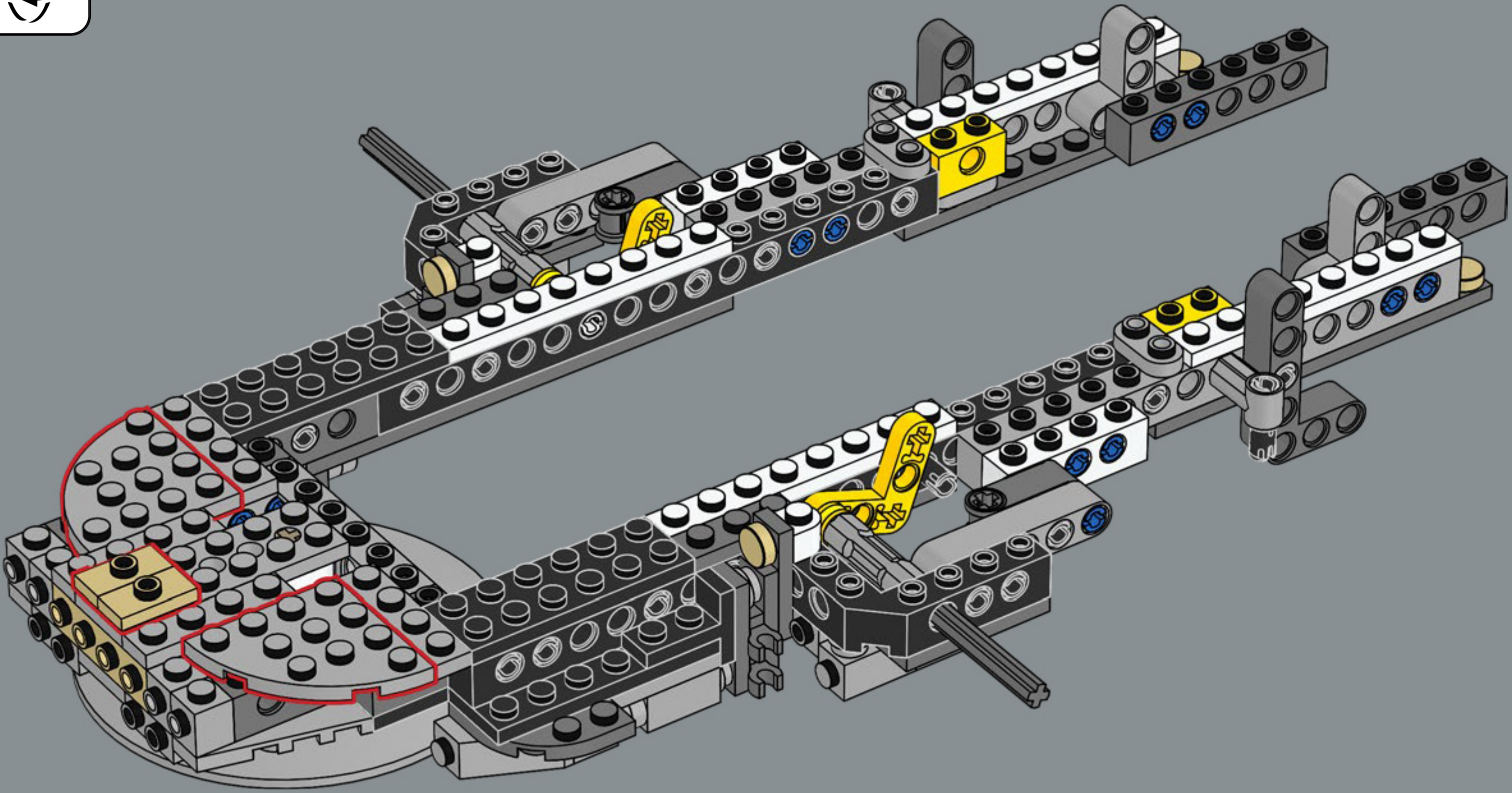

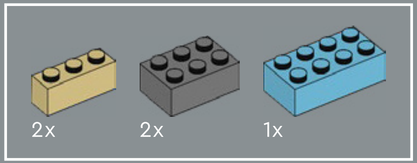

96

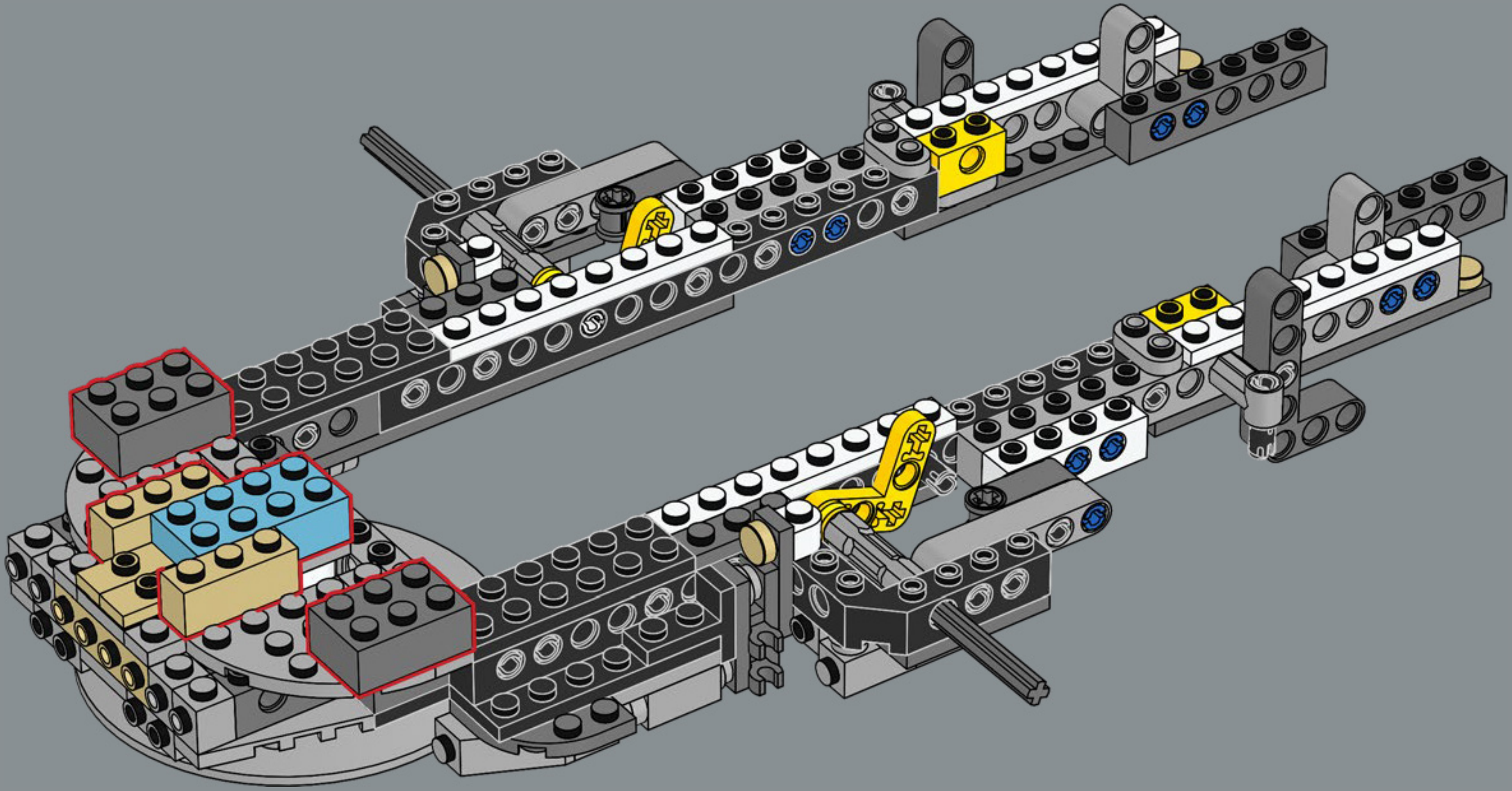

97

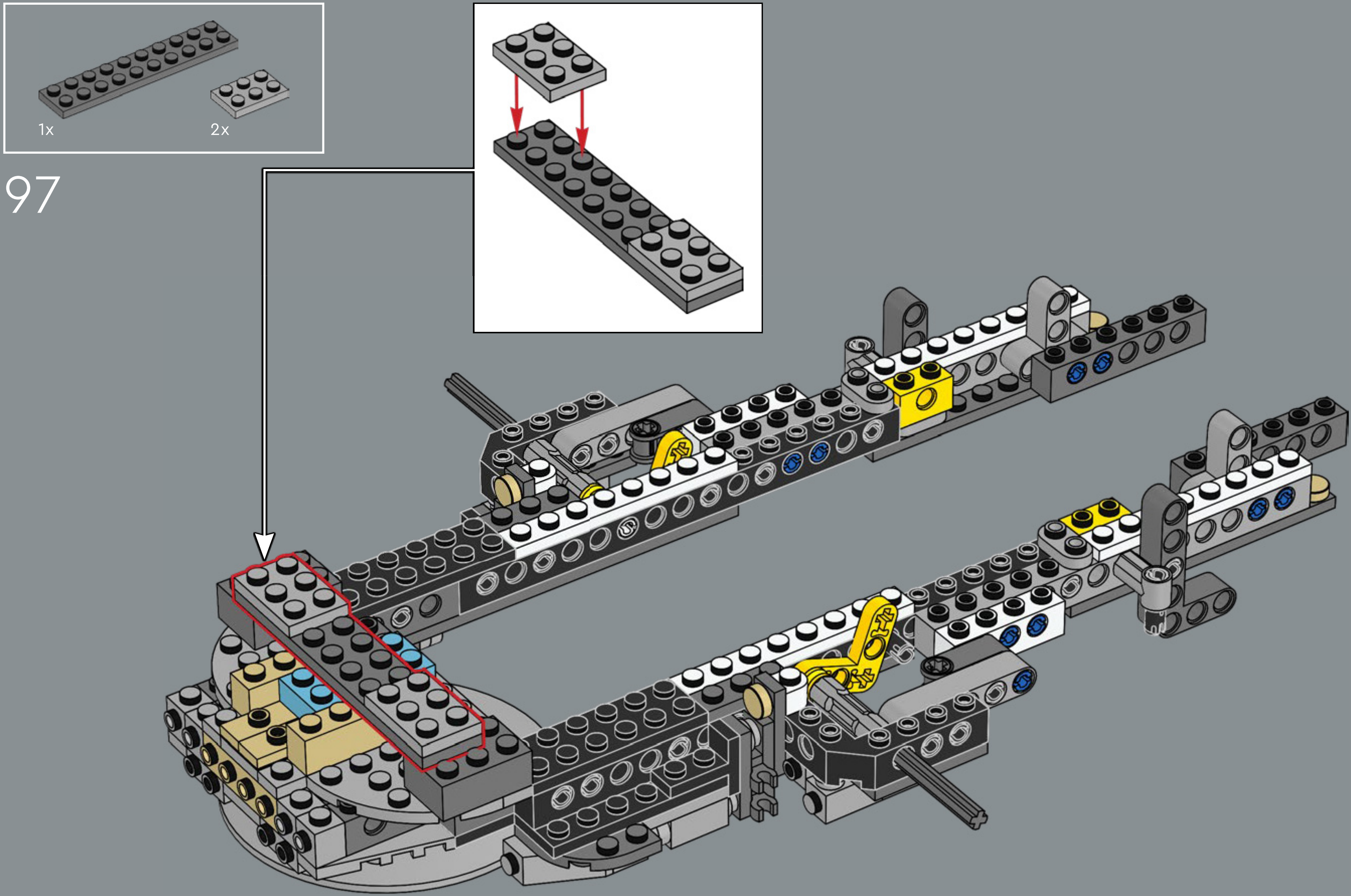

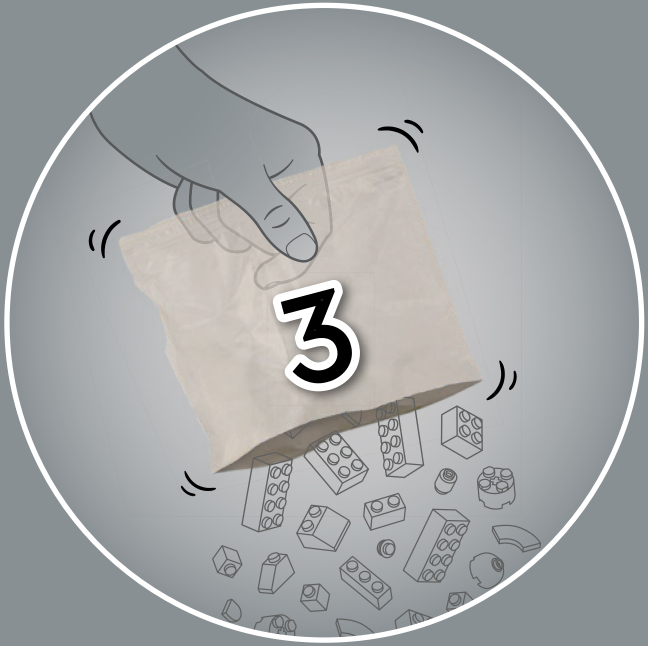

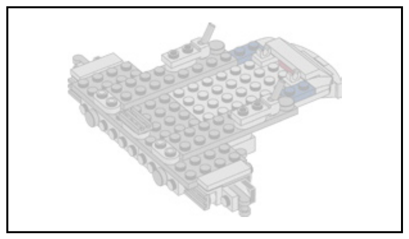

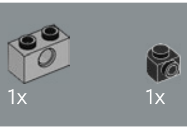

98

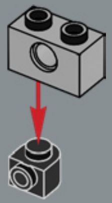

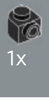

99

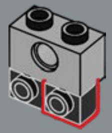

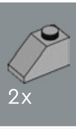

100

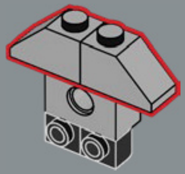

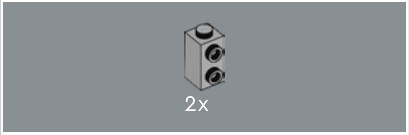

101

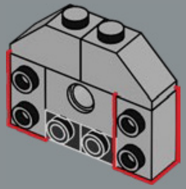

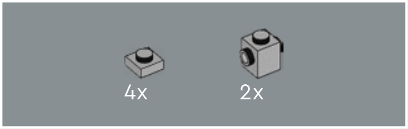

102

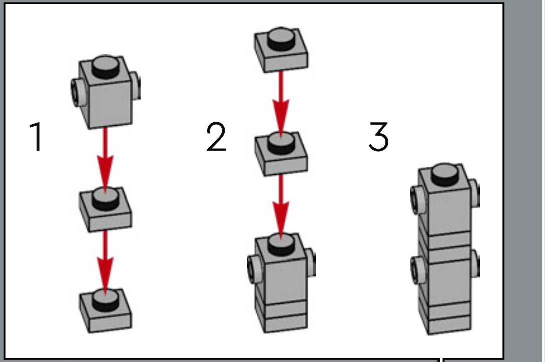

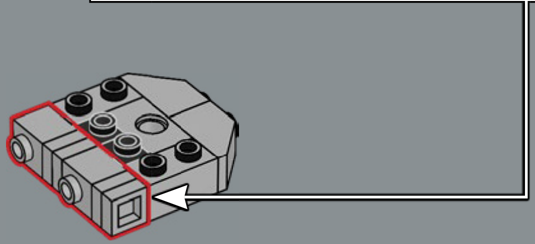

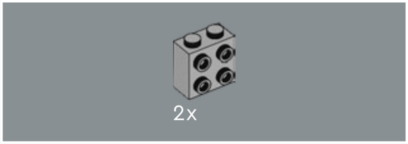

103

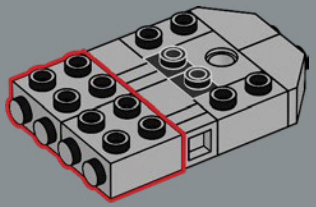

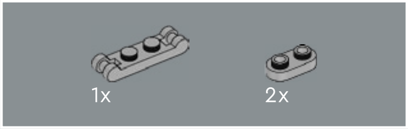

104

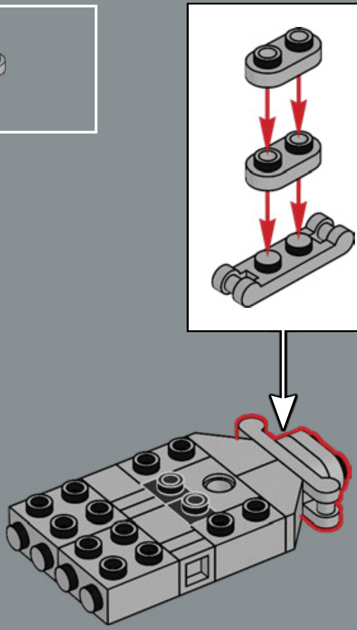

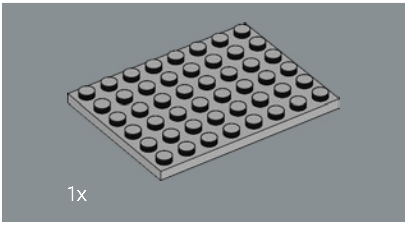

105

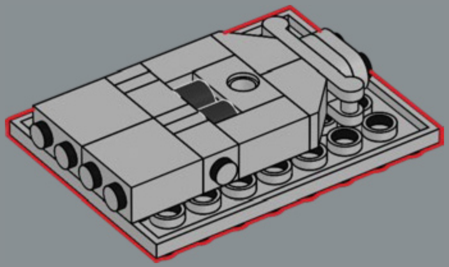

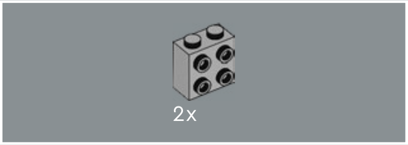

106

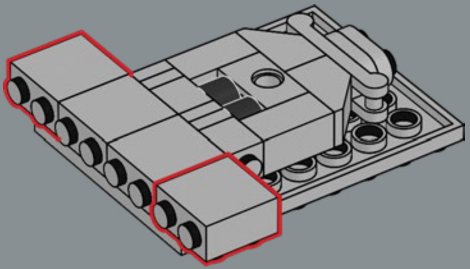

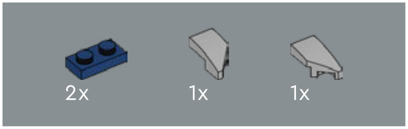

107

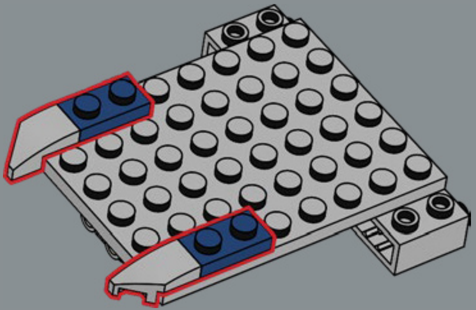

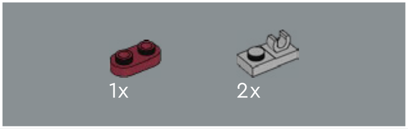

108

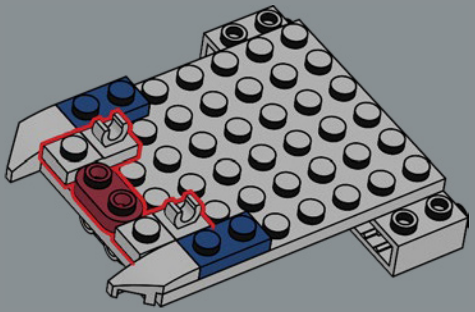

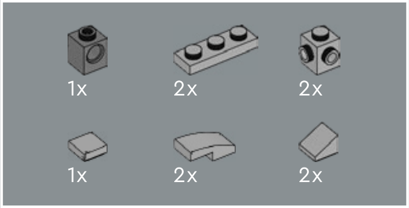
1x
2x
2x
1x
2x
2x

109

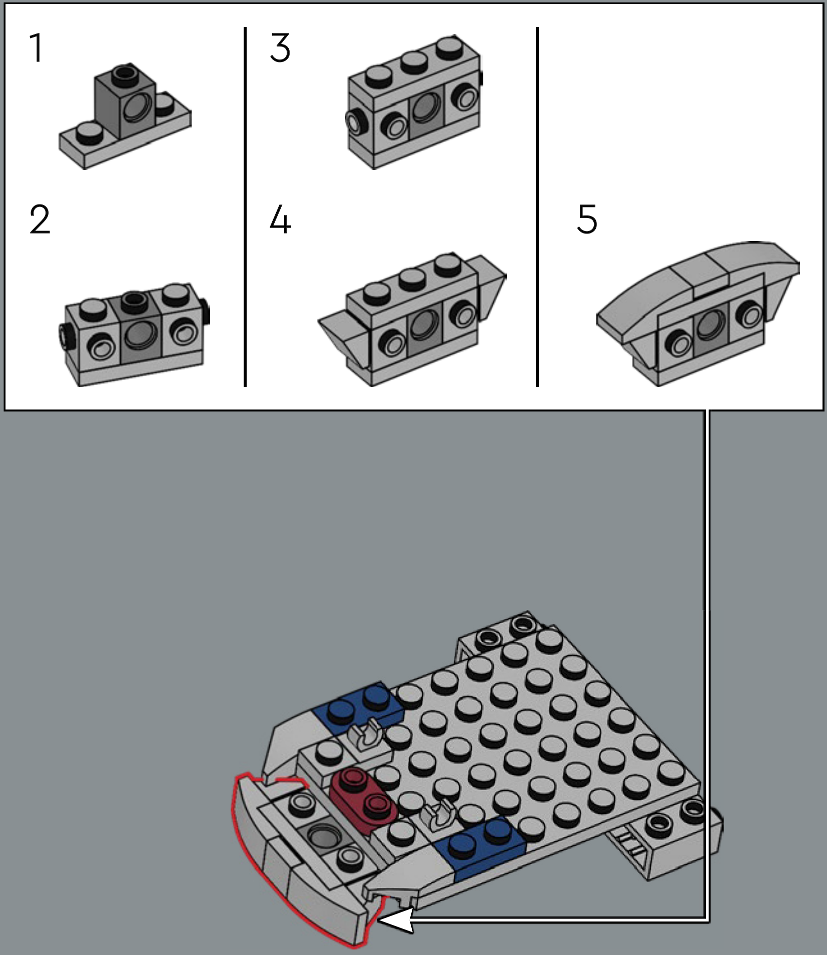

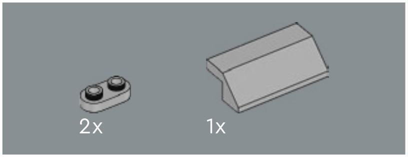

110

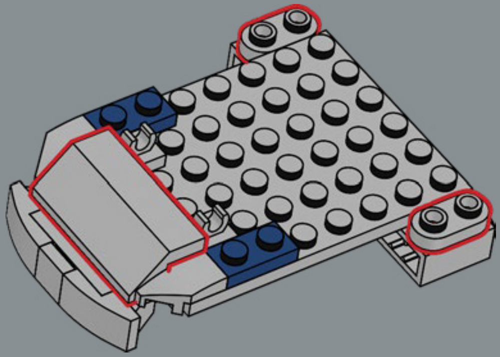

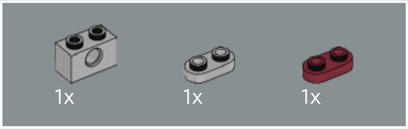

111

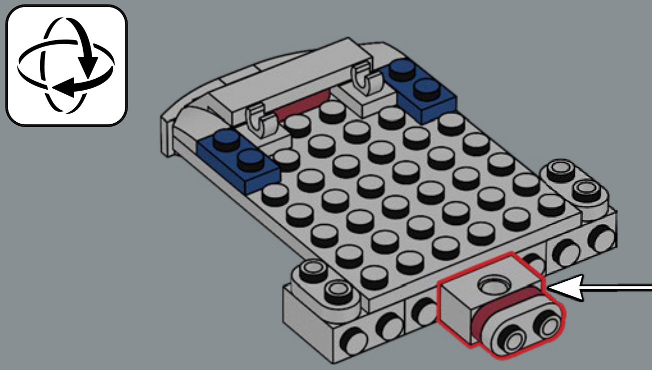

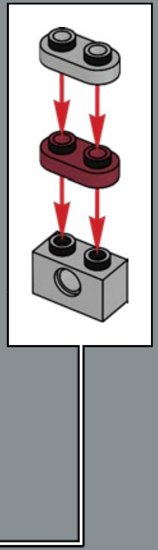

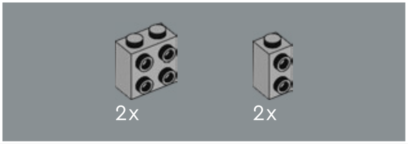

112

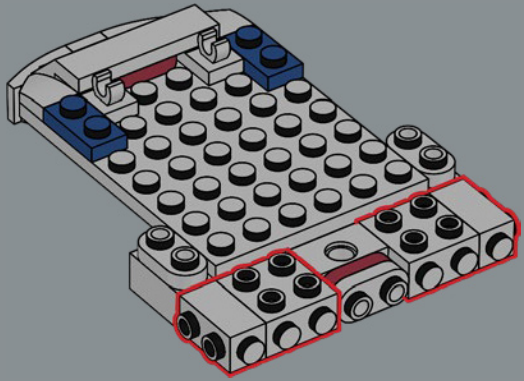

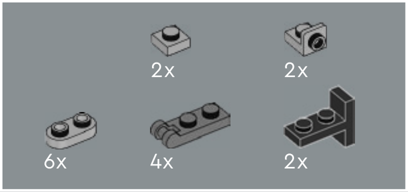
2x
2x
6x
4x
2x

113

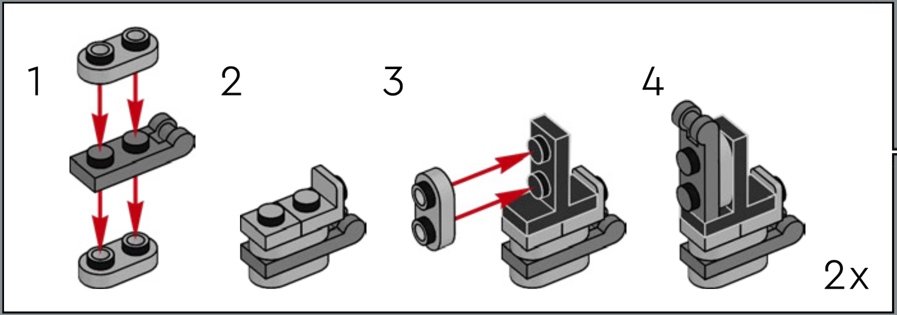

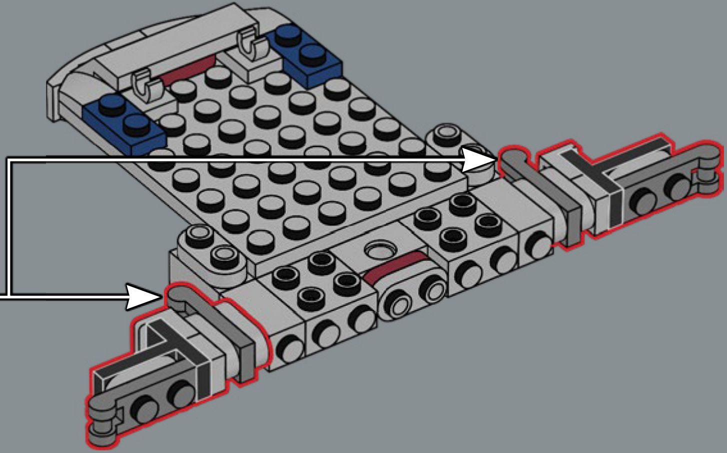

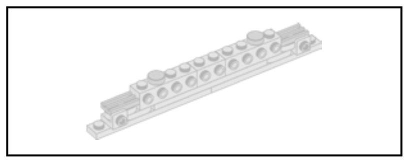

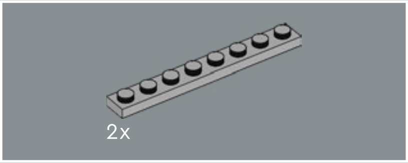

114

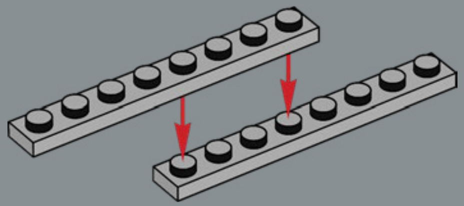

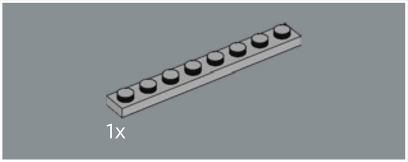

115

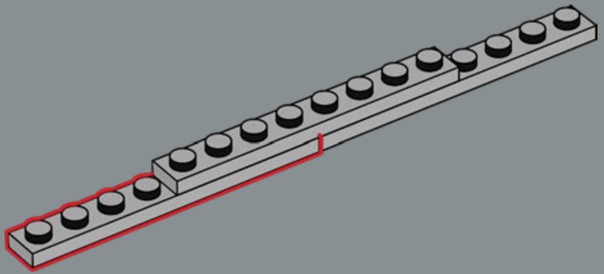

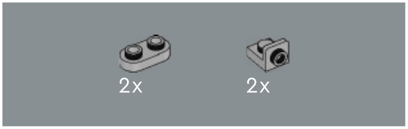

116

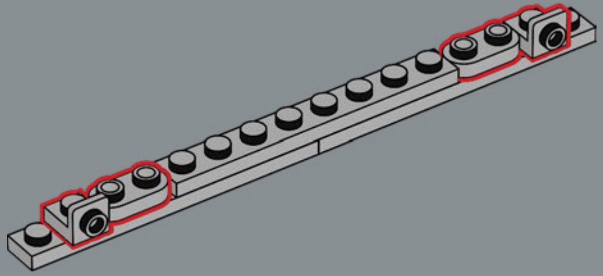

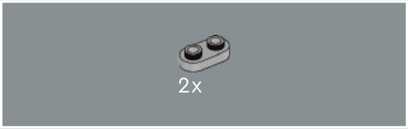

117

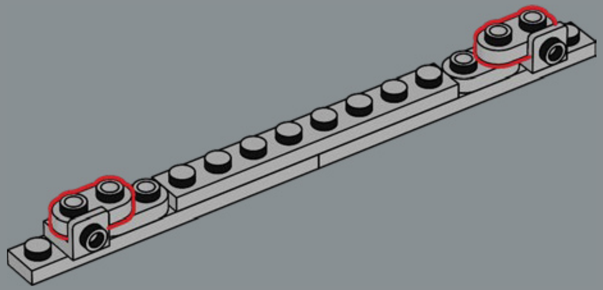

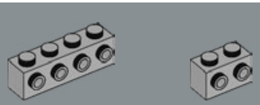

118

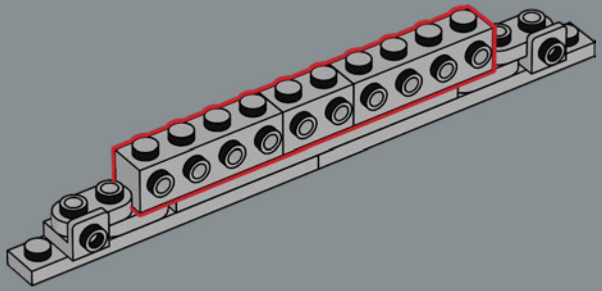

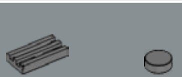

119

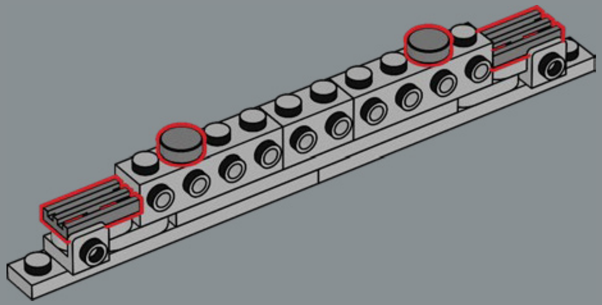

120

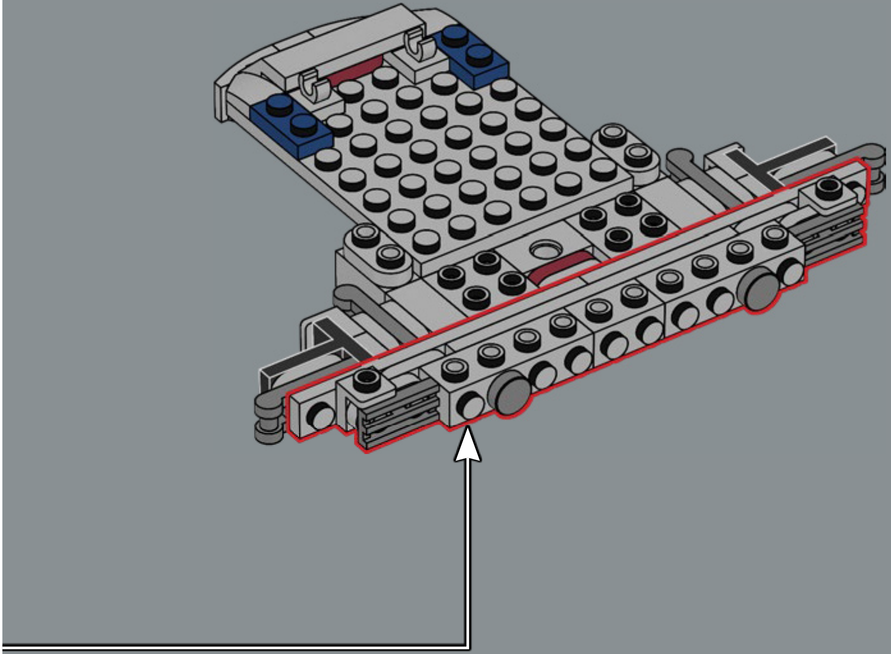

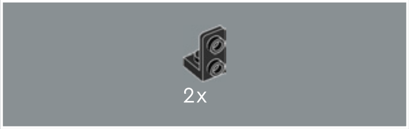

121

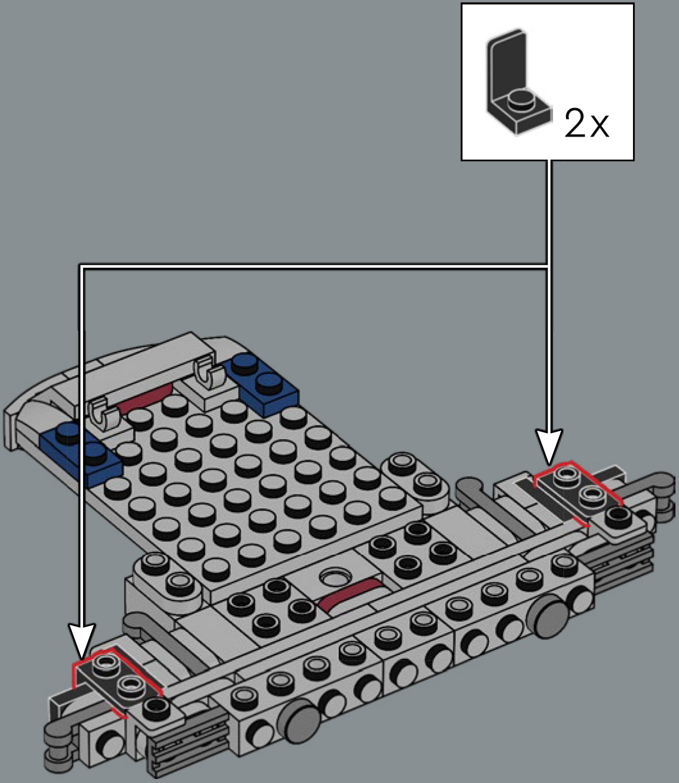

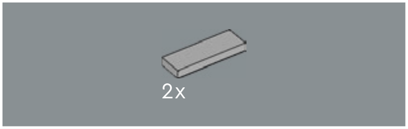

122

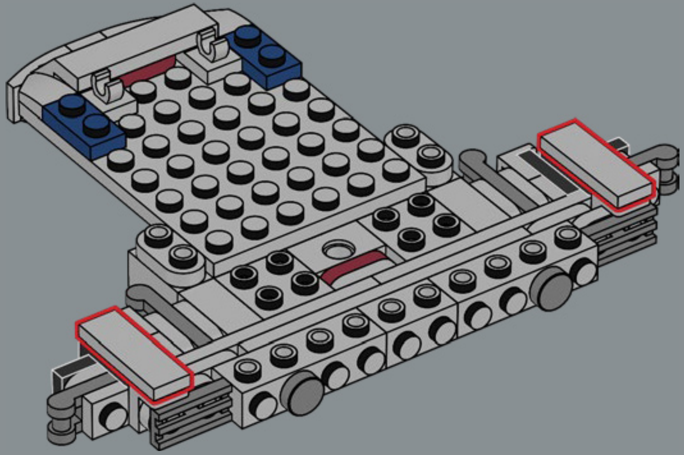

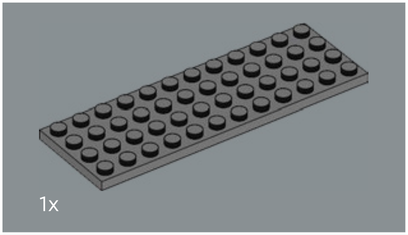

123

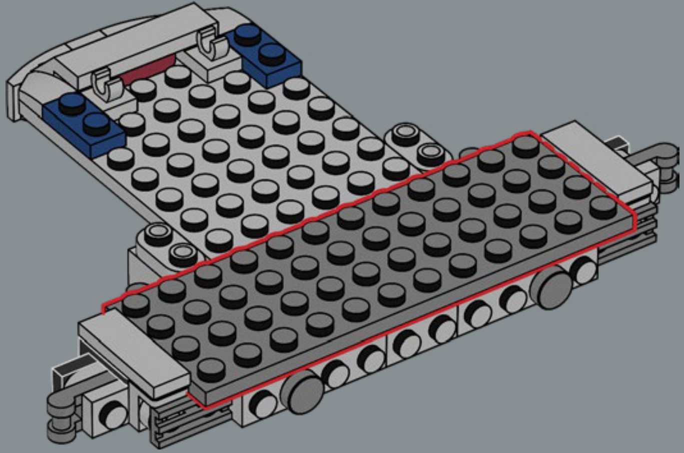

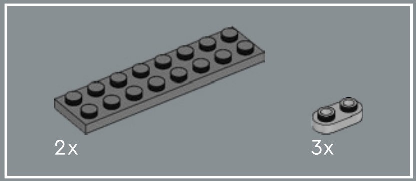

124

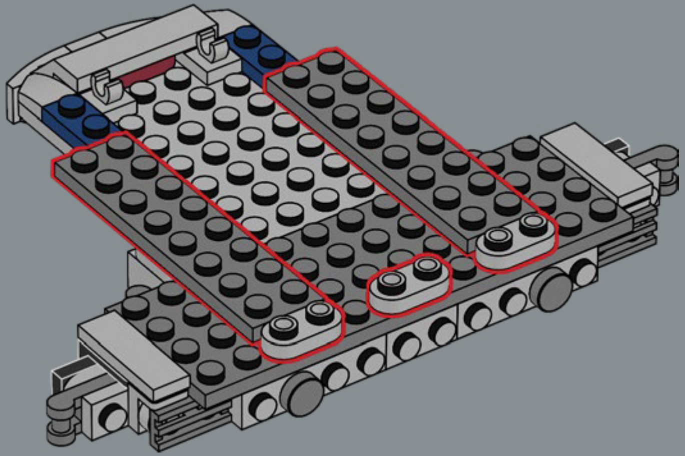

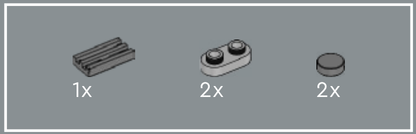

125

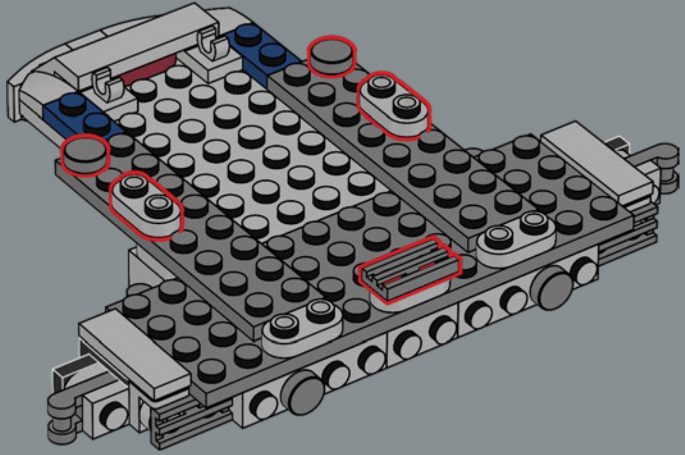

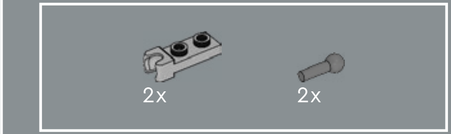

126

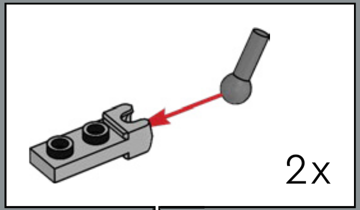

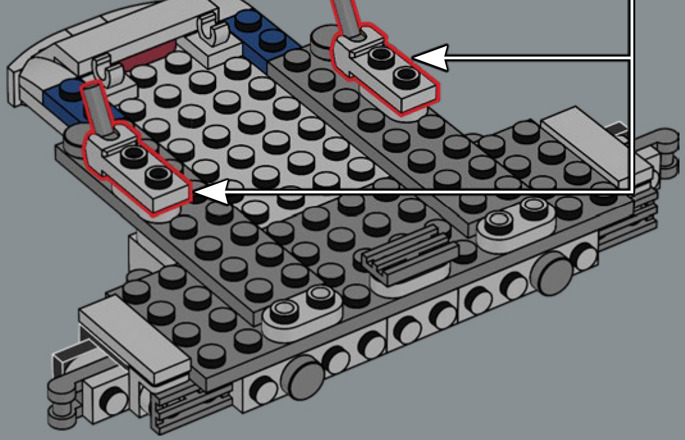

127

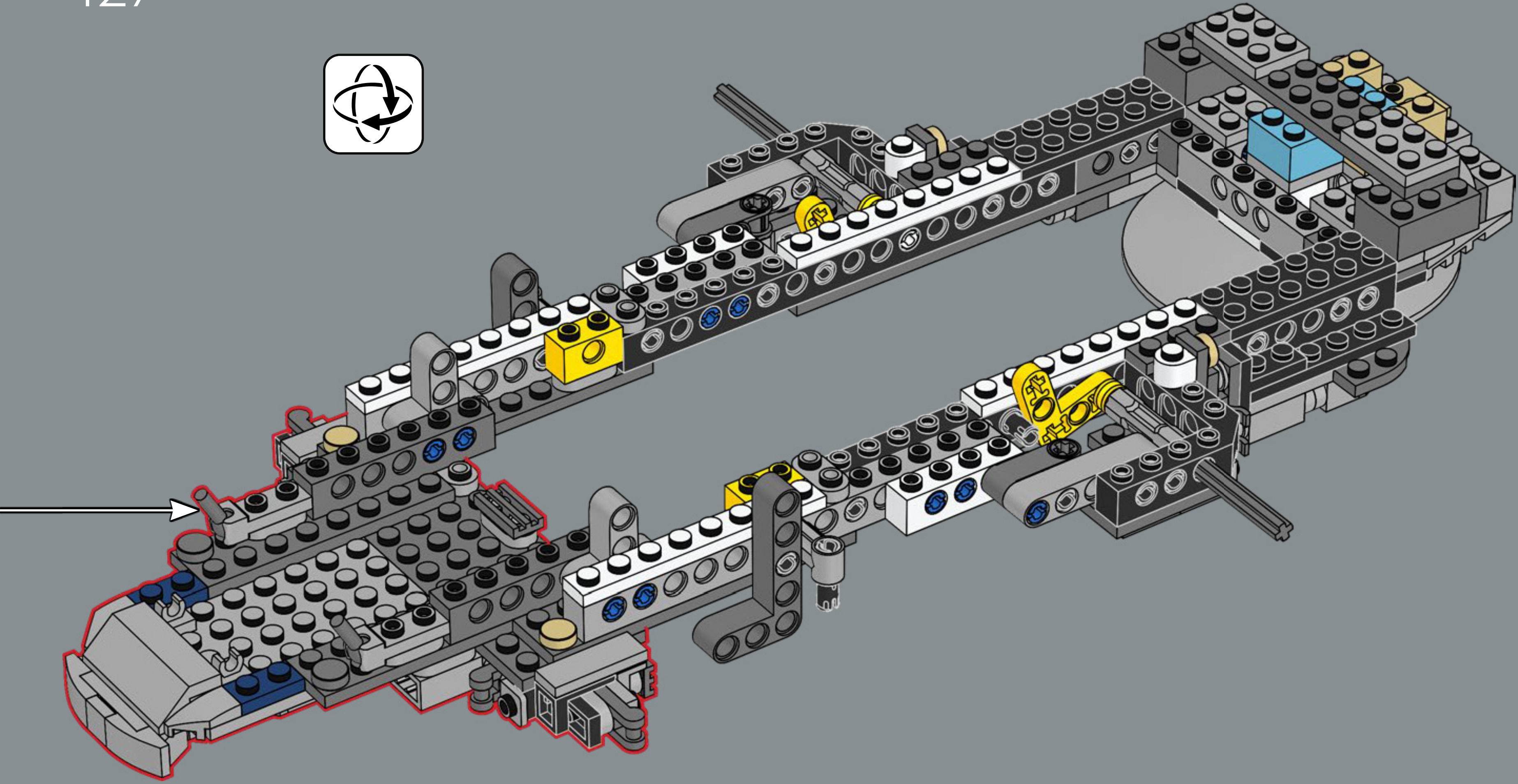

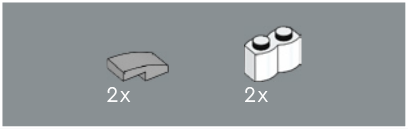

128

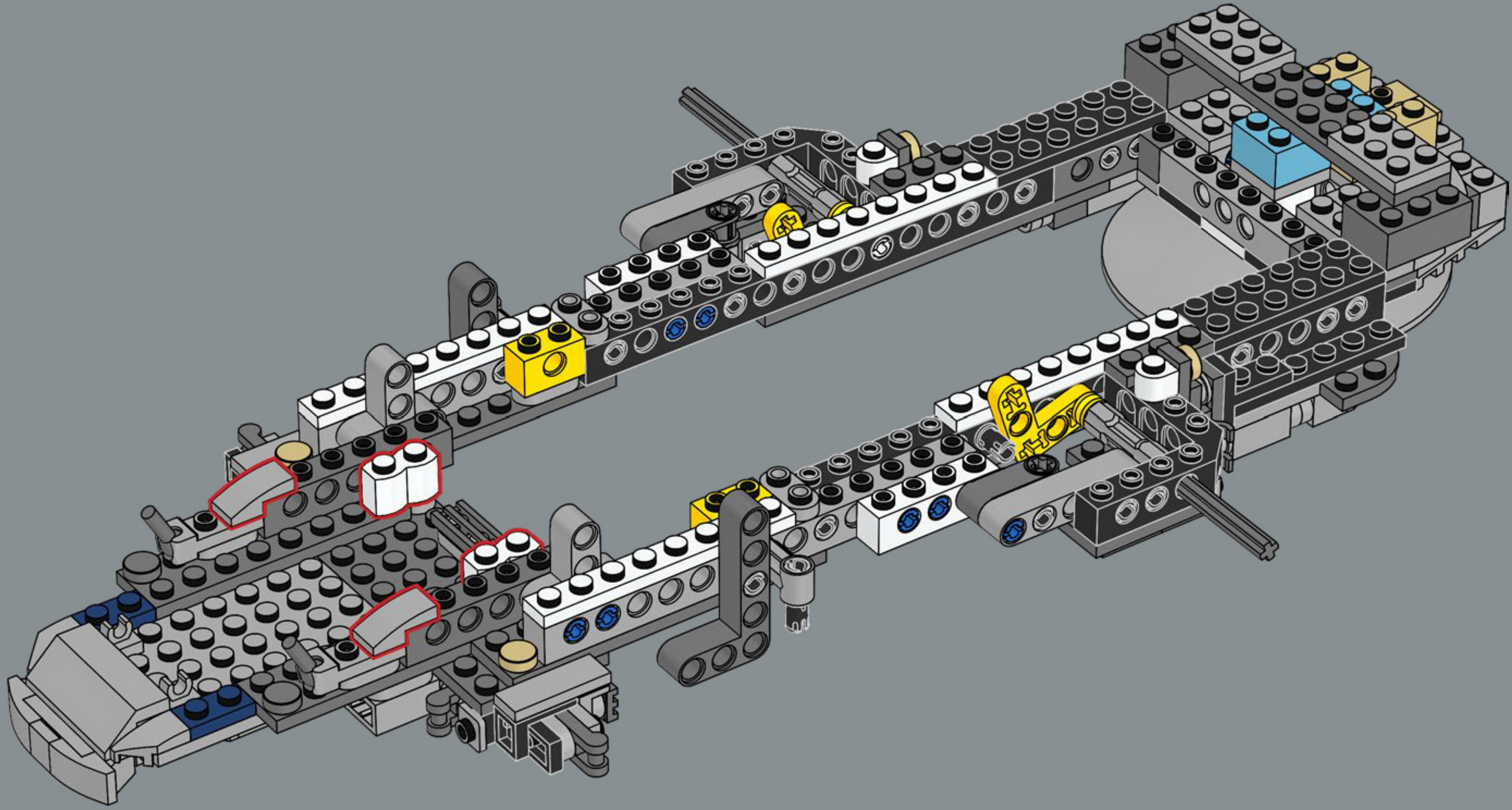

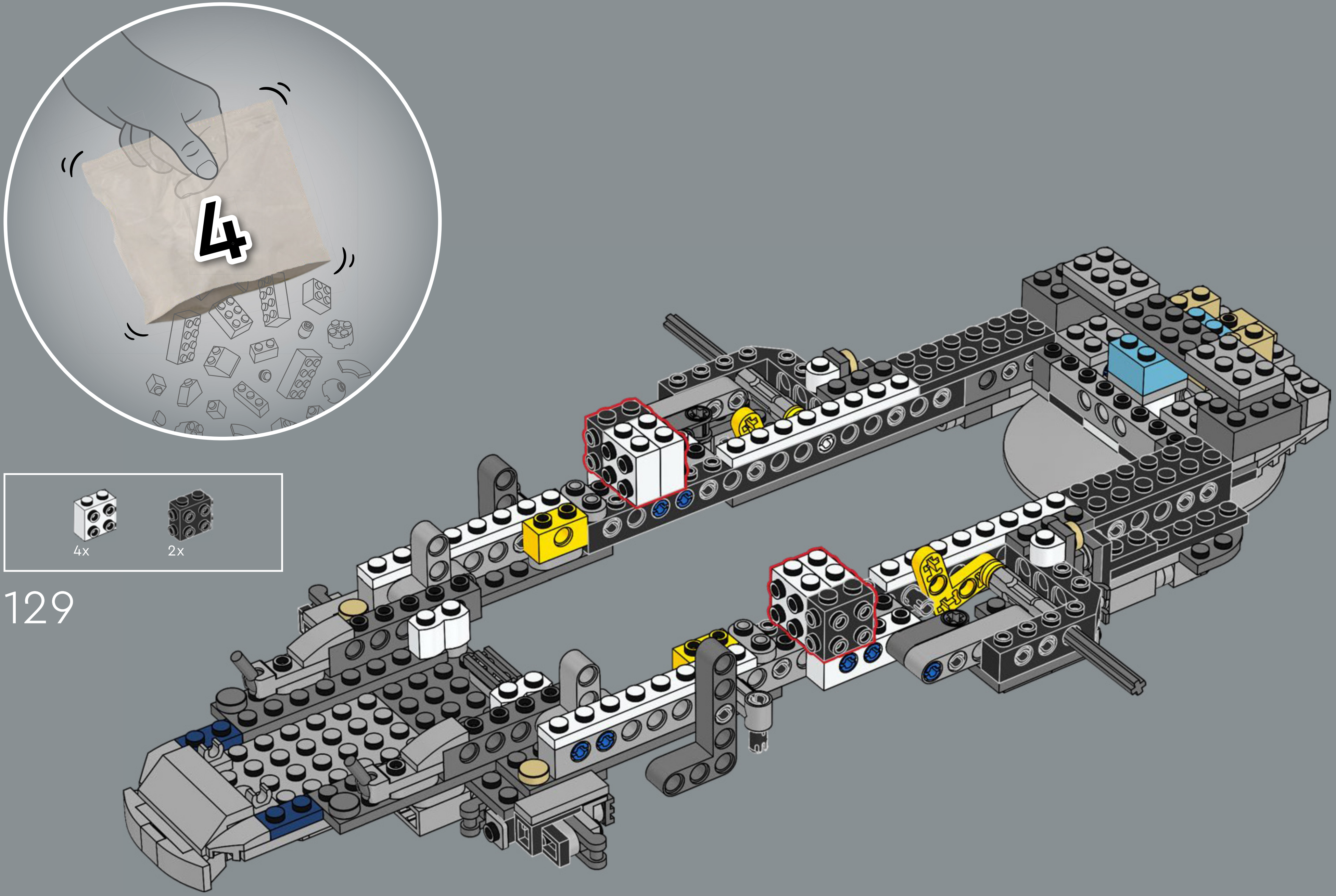

129

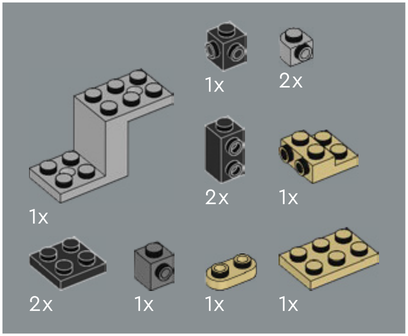
1x
2x
1x
2x
1x
1x
2x
1x
1x
1x

130

1

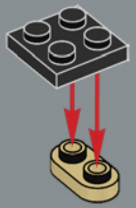

2

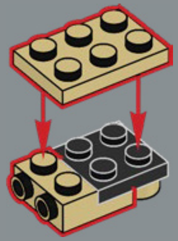

3

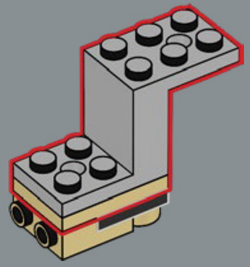

4

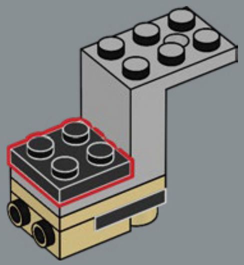

5

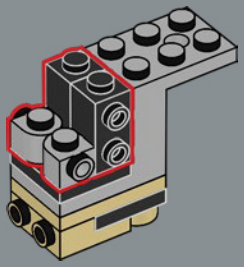

6

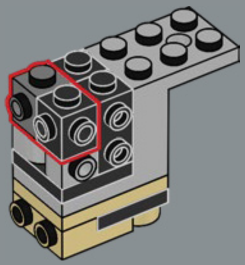

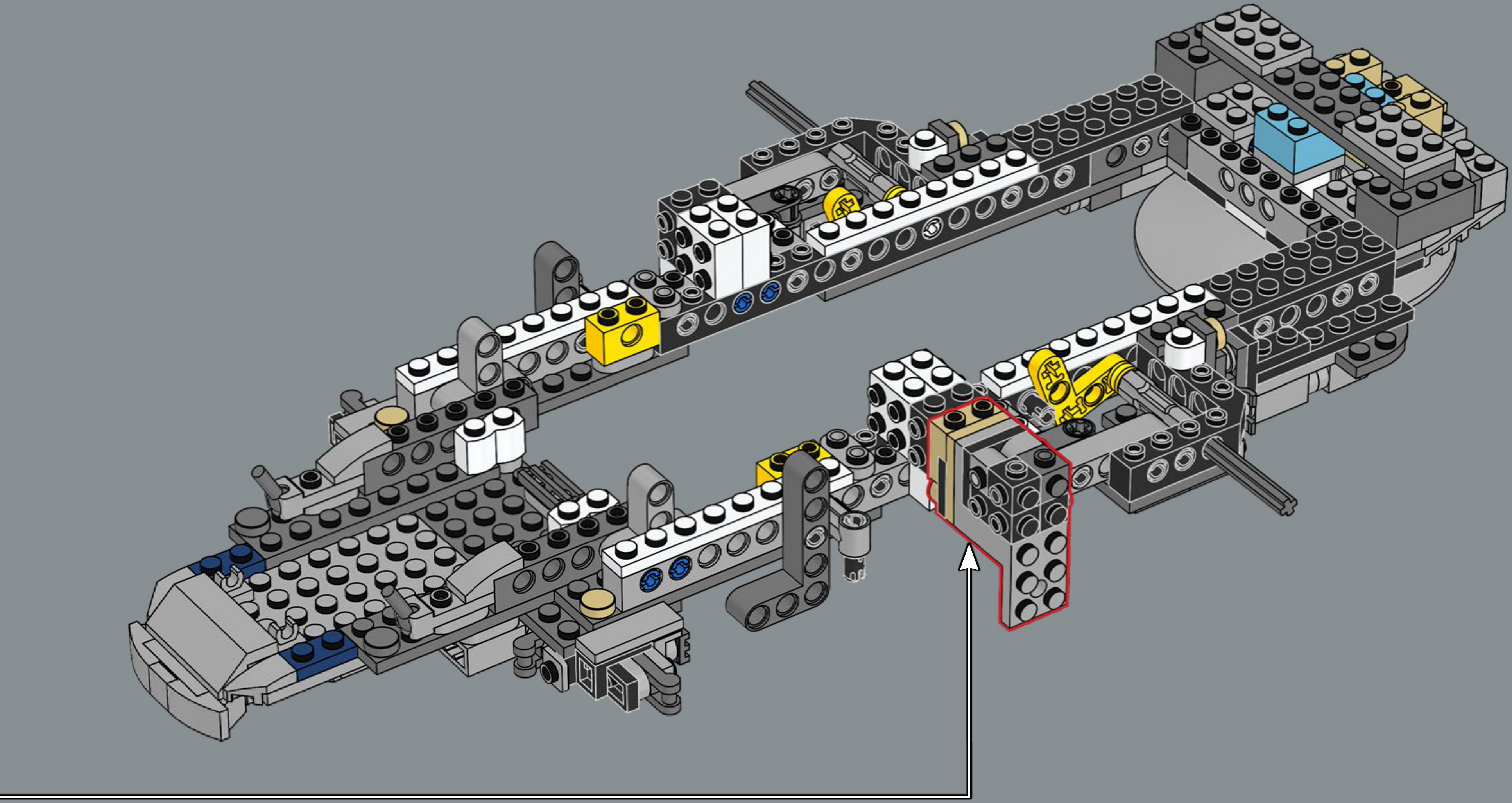

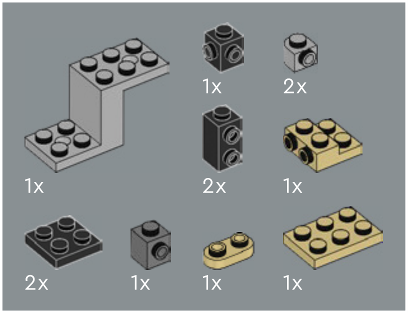
1x
1x
2x
2x
1x
2x
1x
1x
1x

131

1

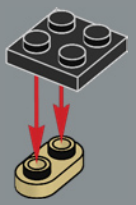

2

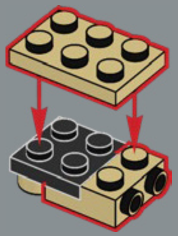

3

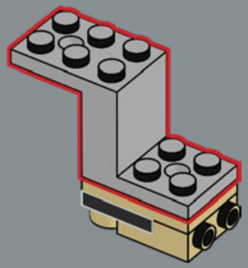

4

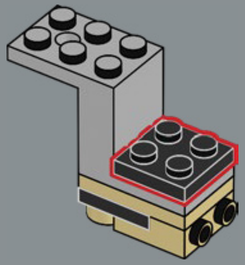

5

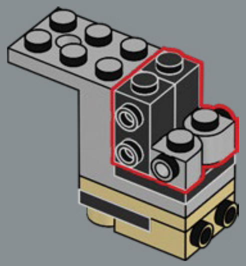

6

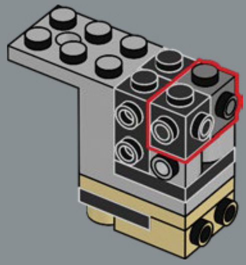

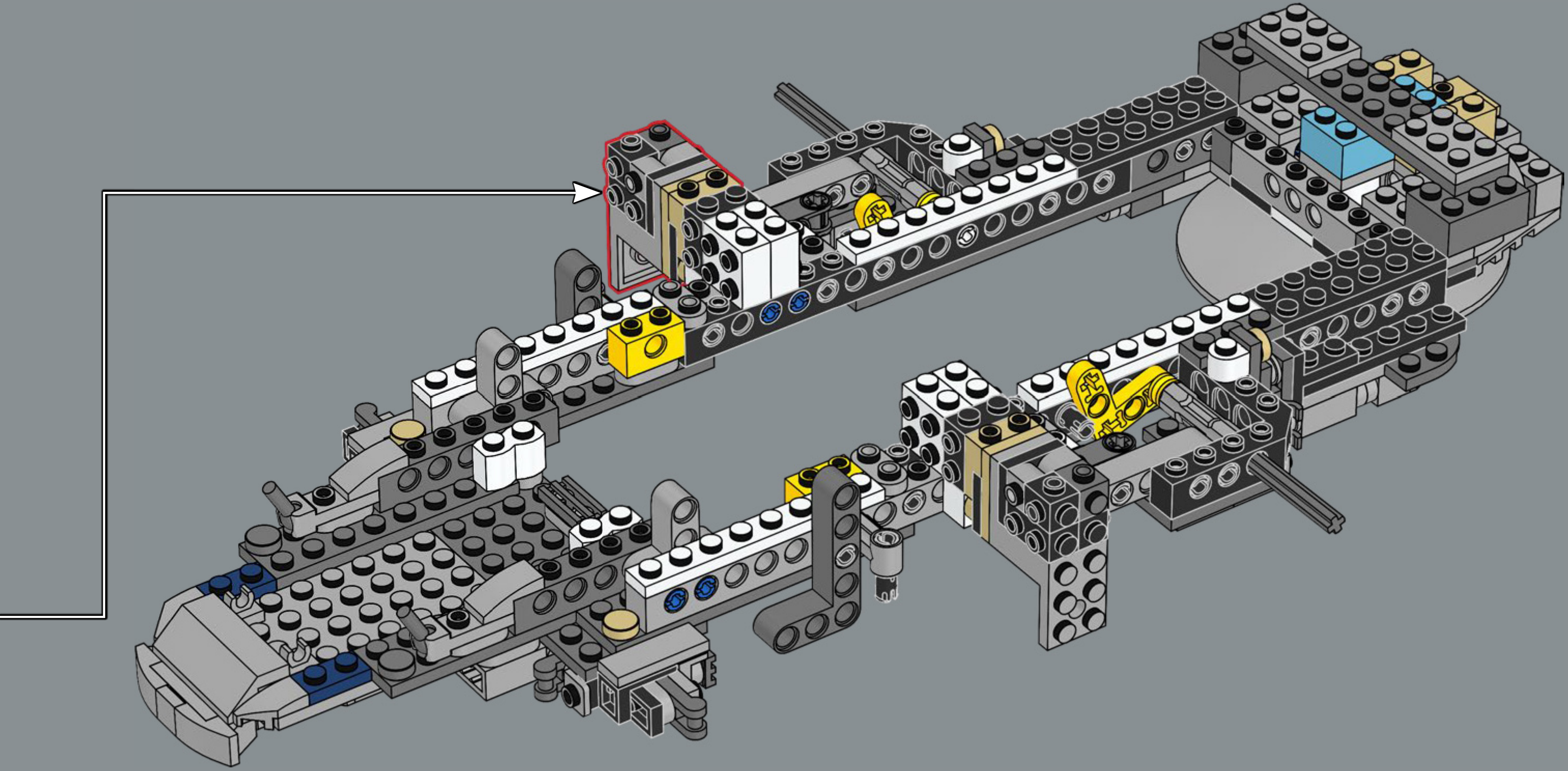

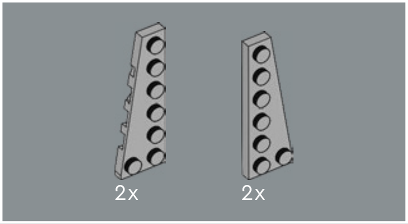

132

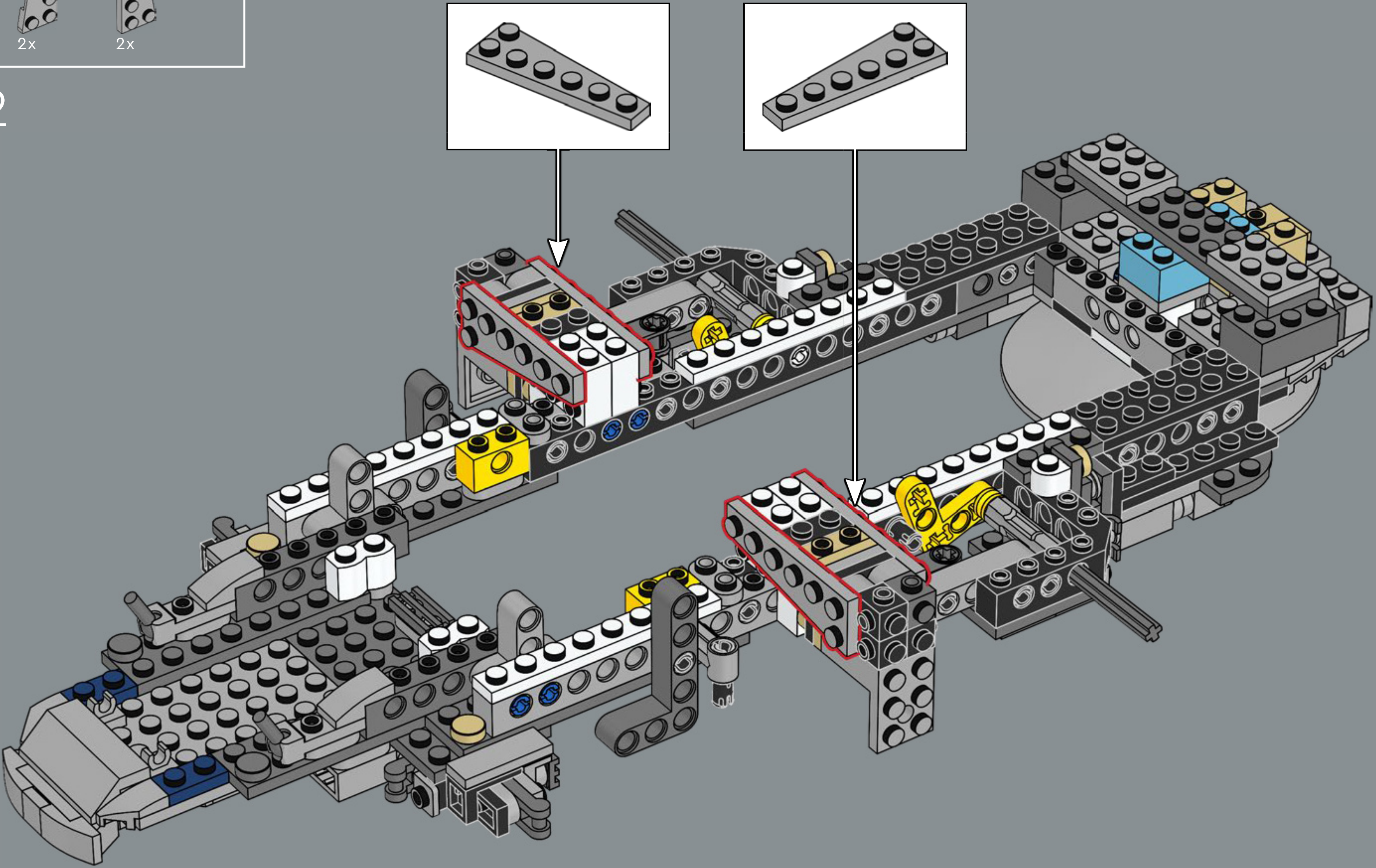

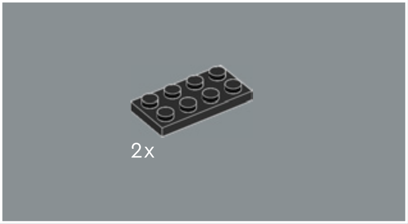

133

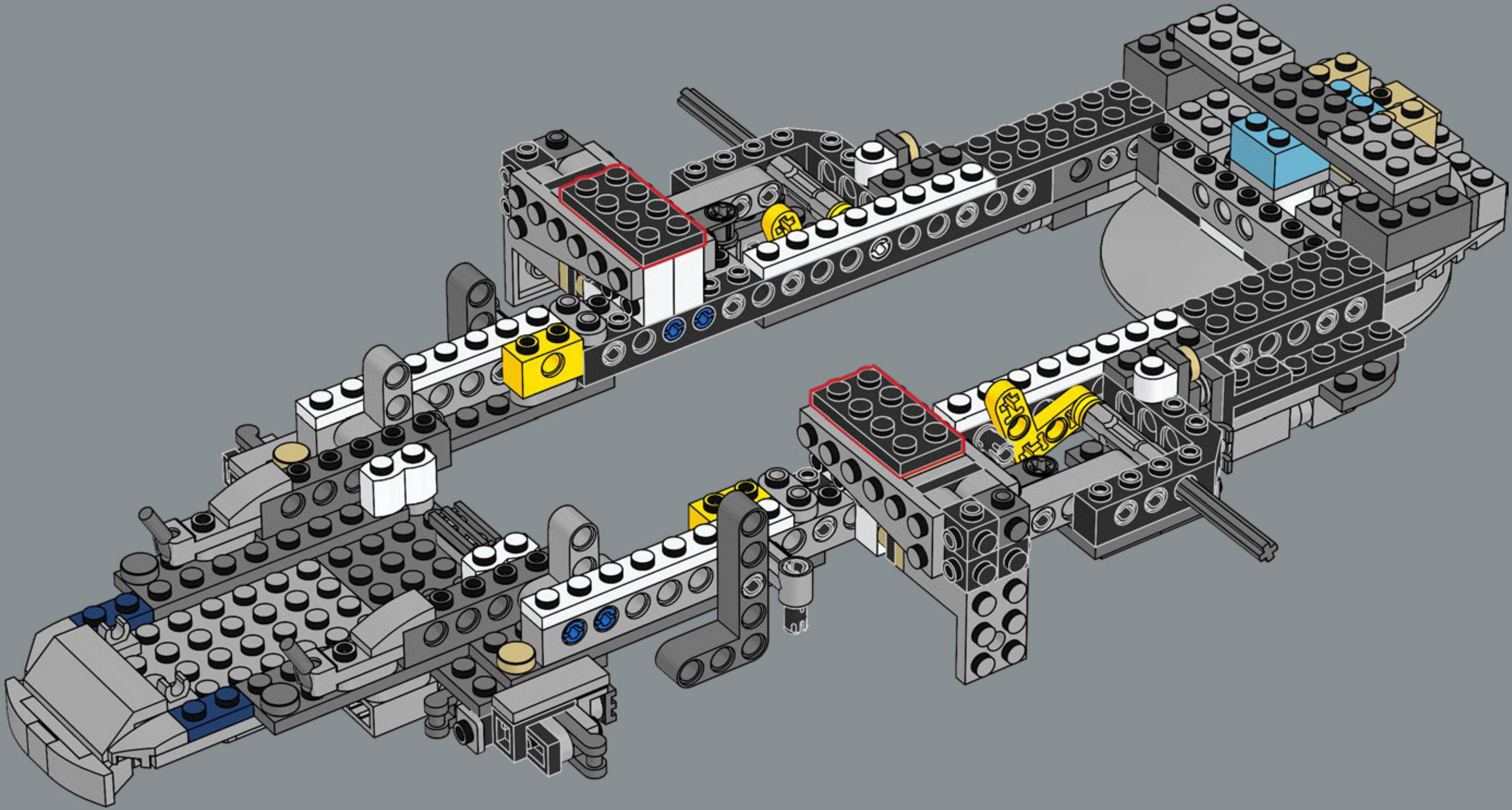

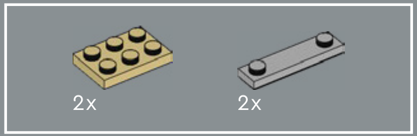

134

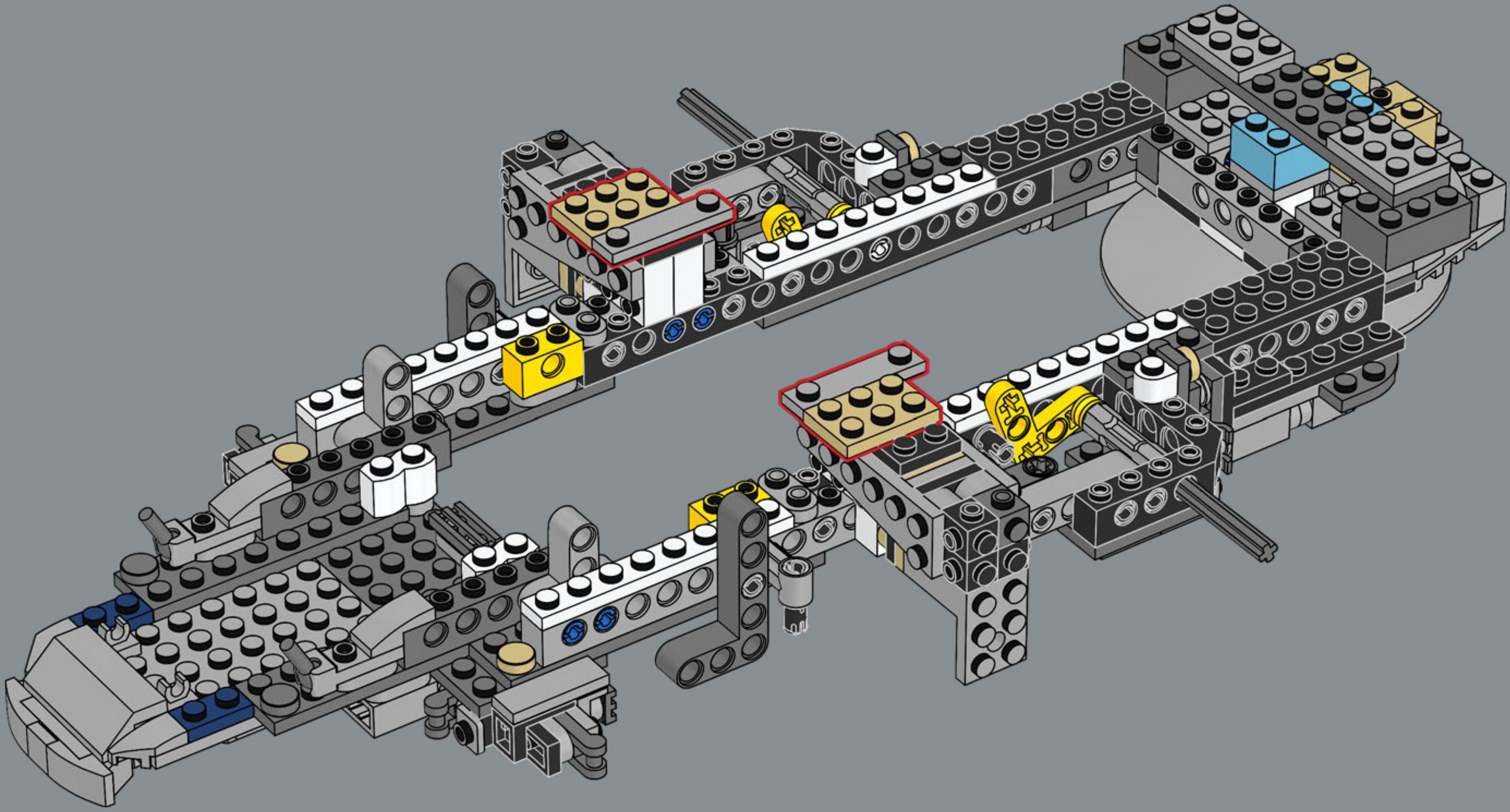

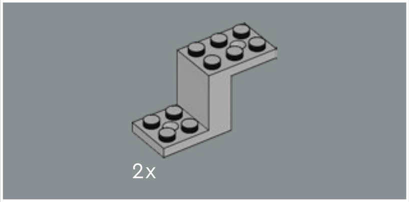

135

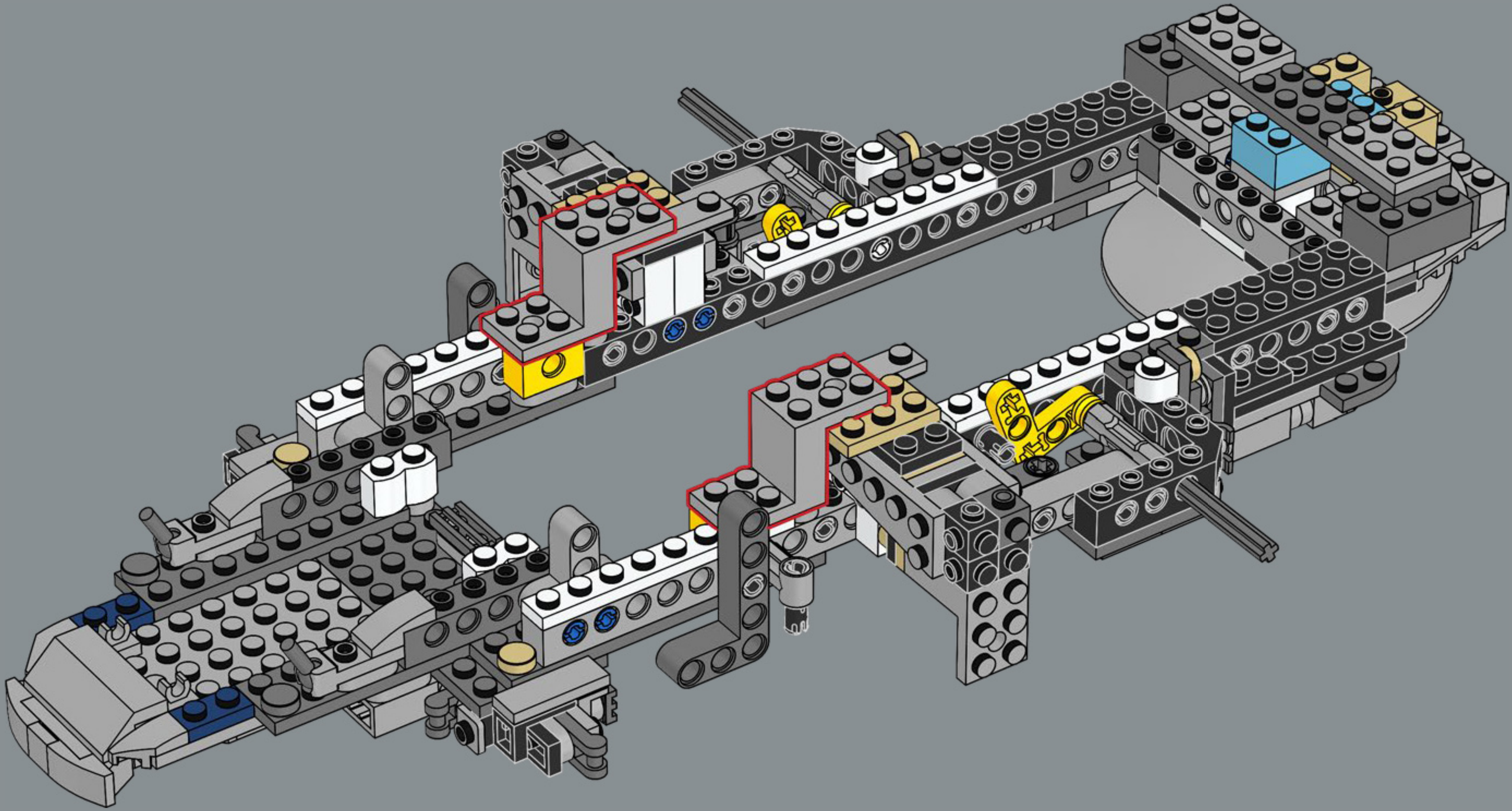

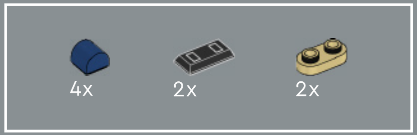

136

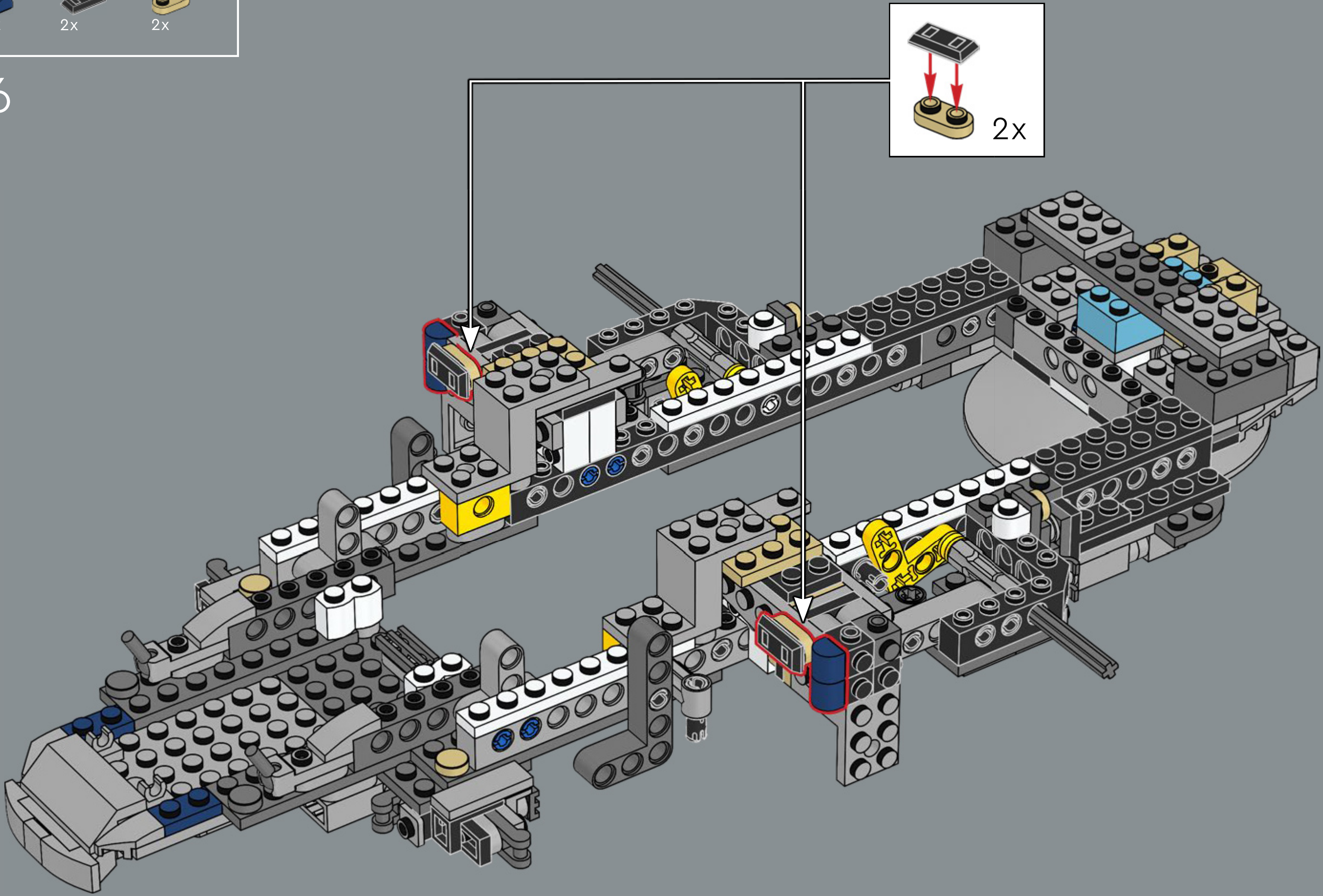

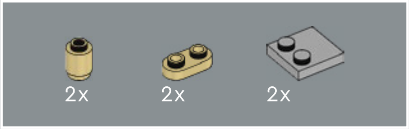

137

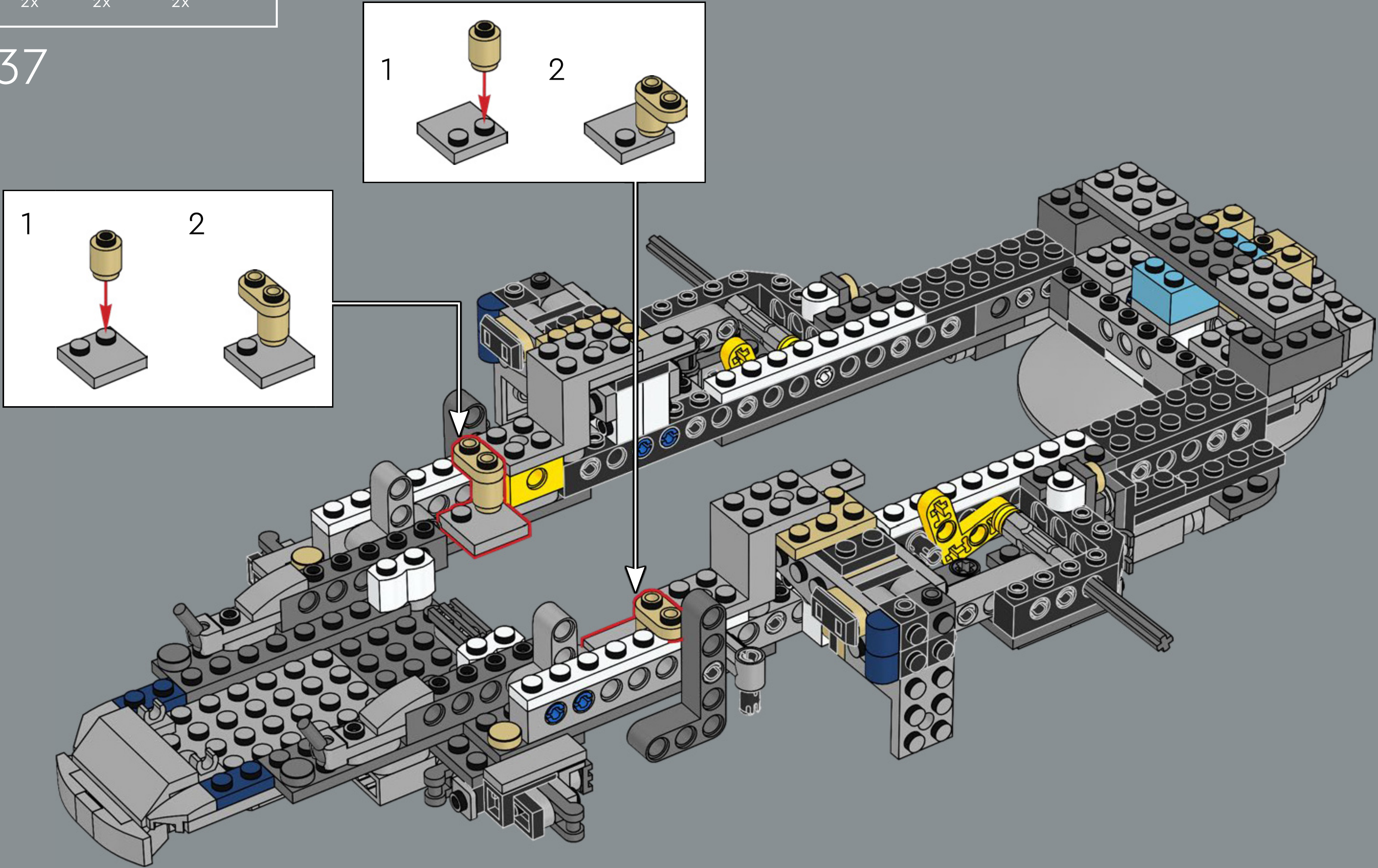

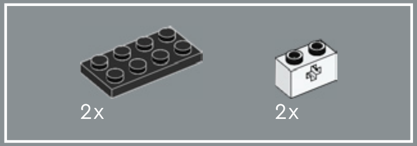

138

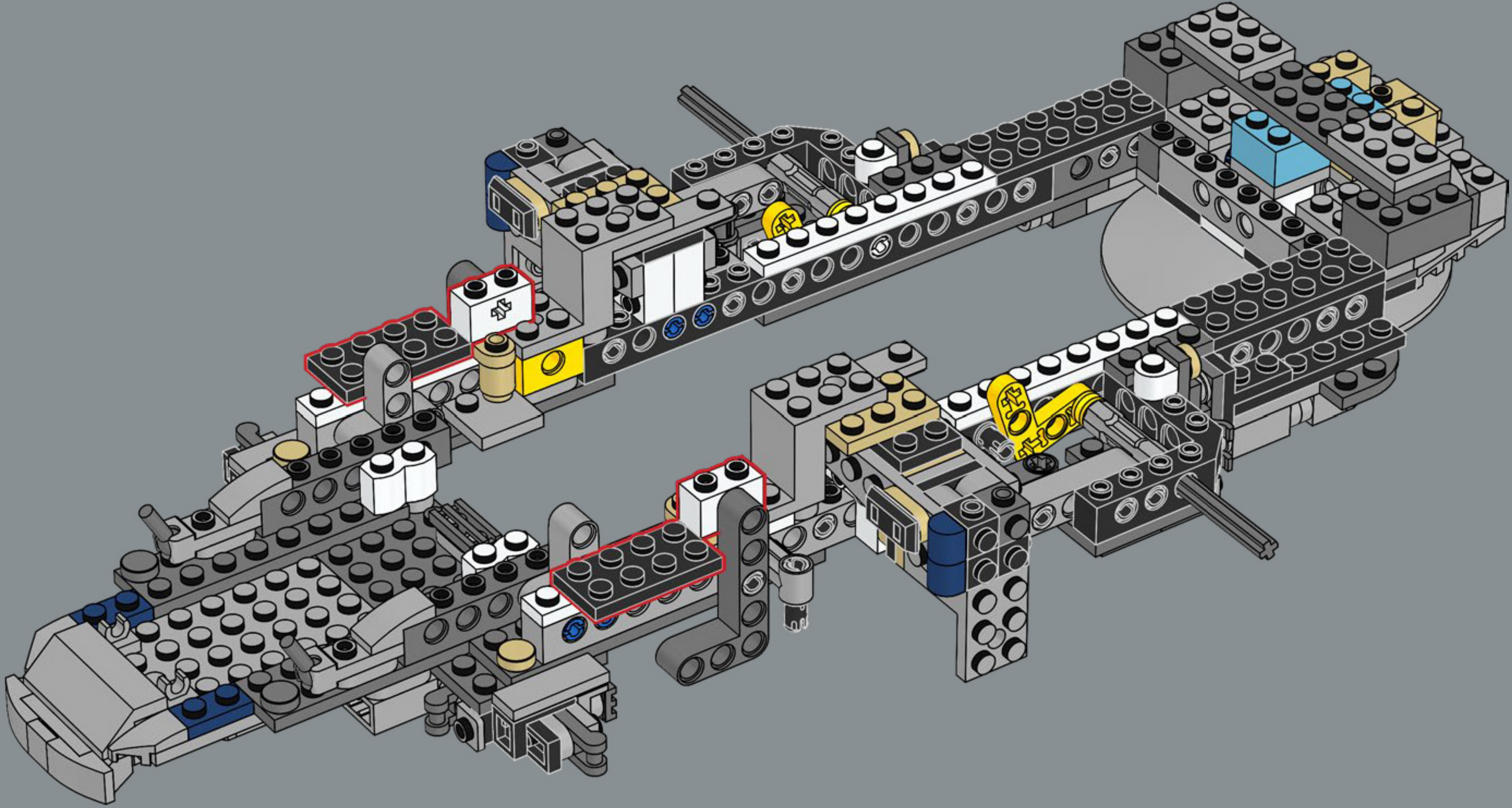

139

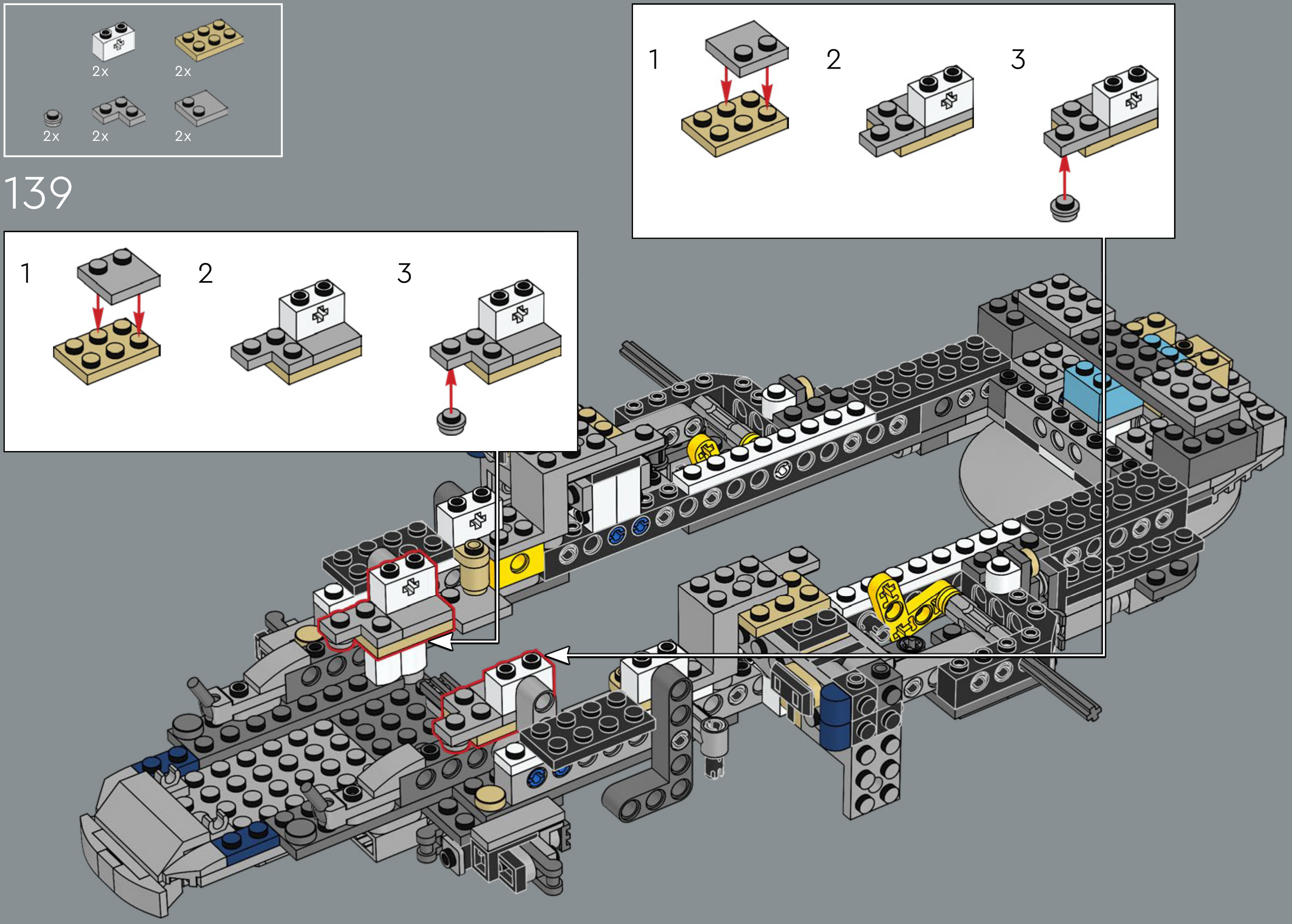
2x
2x
2x
2x
2x
1
2
3
1
2
3

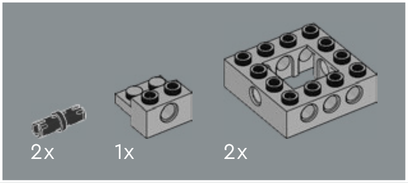

140

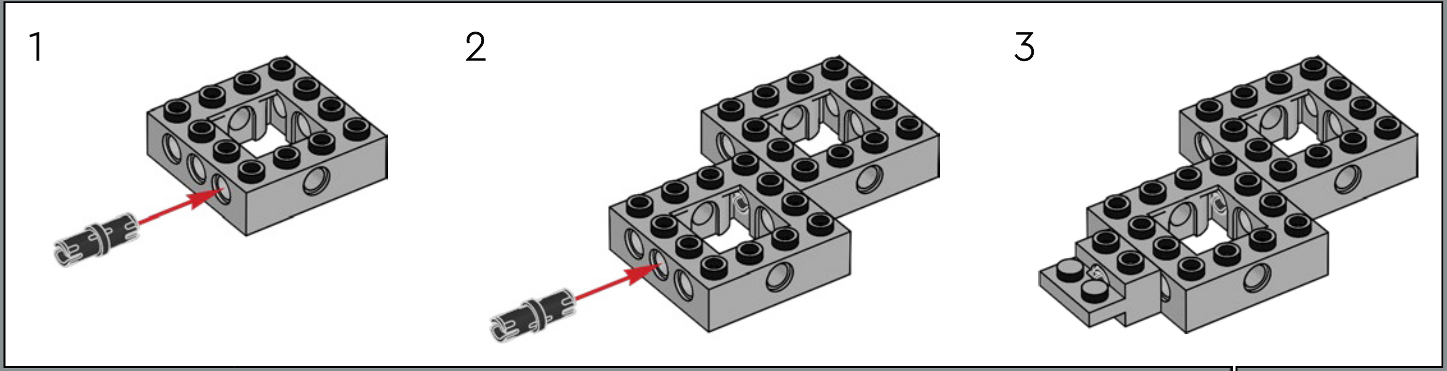

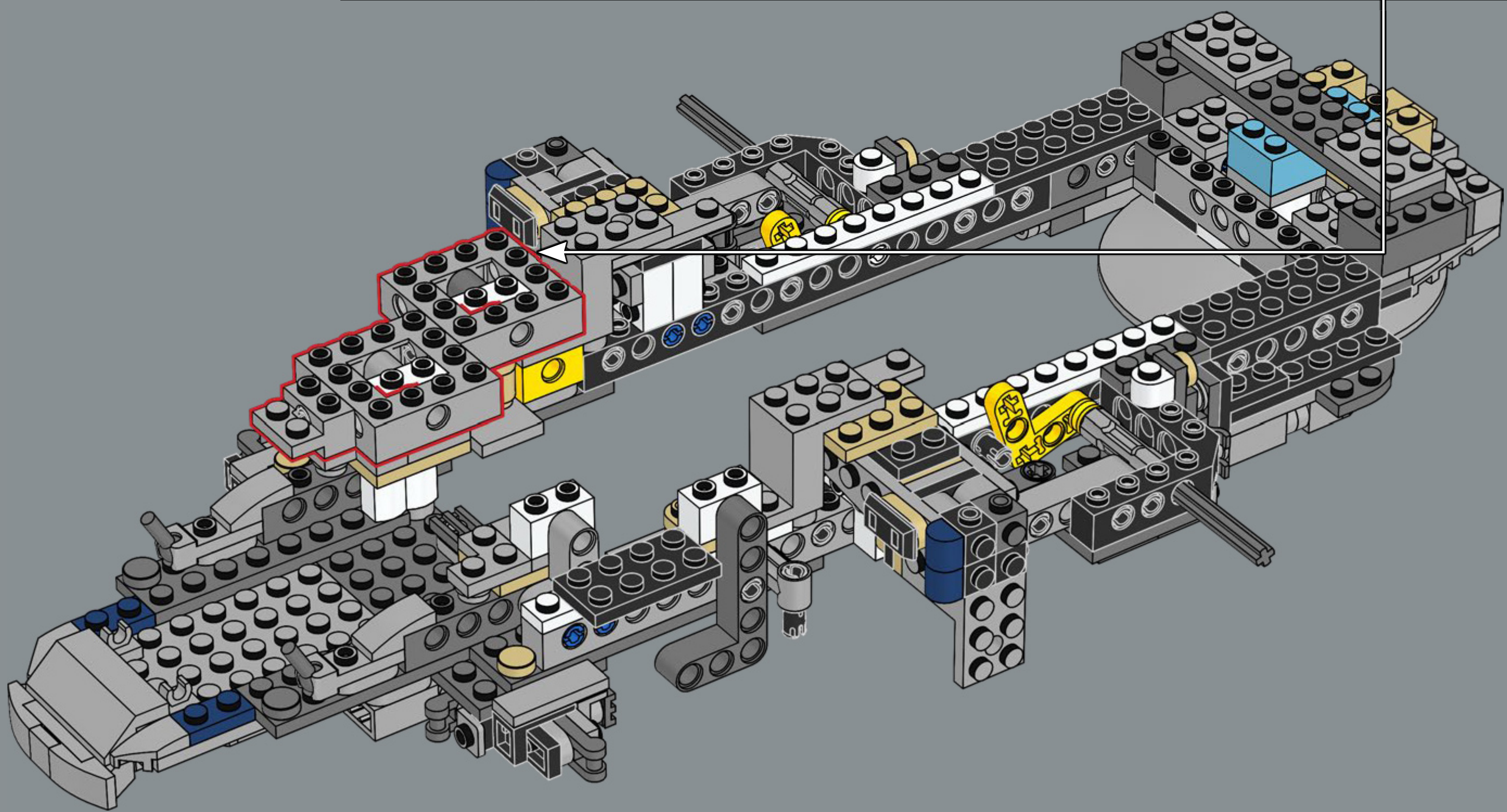

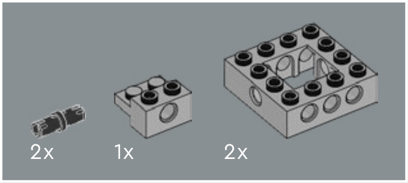

141

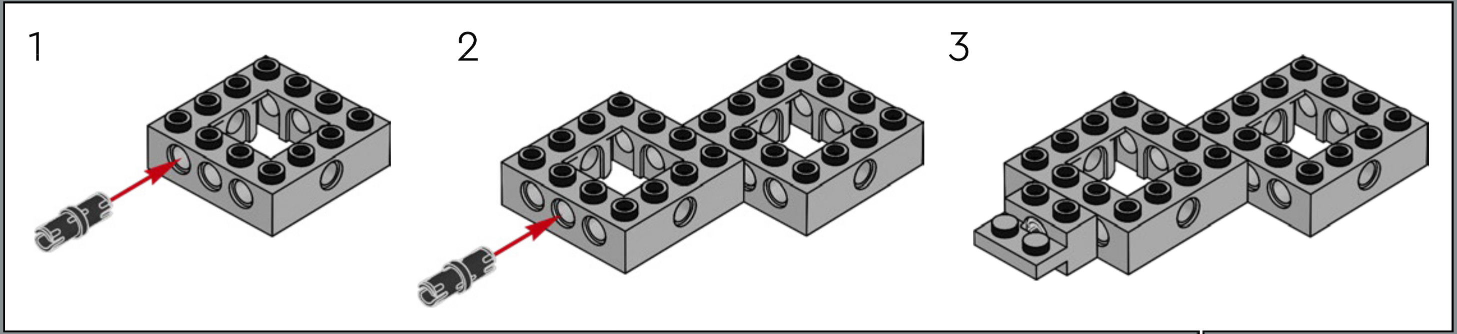

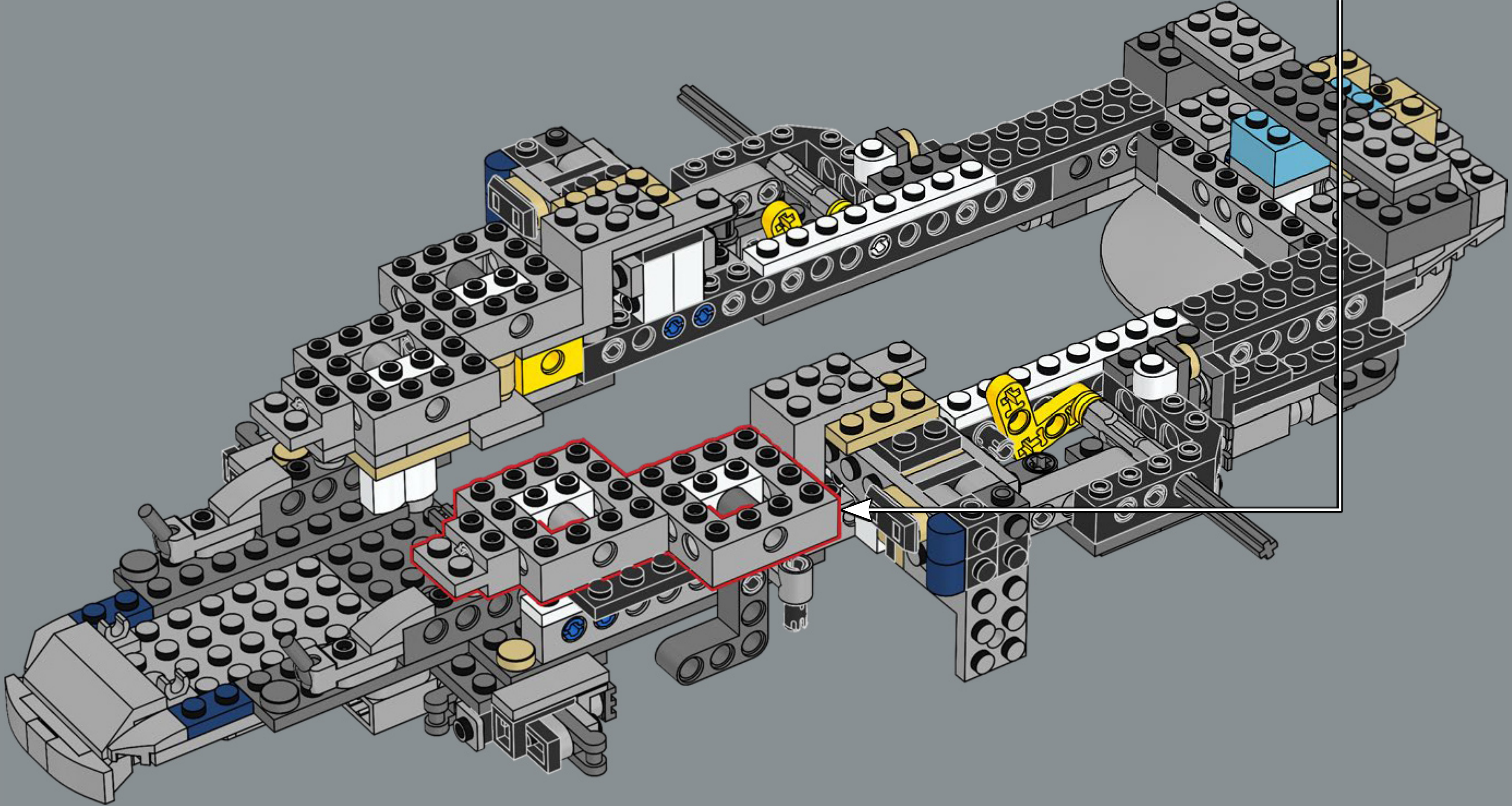

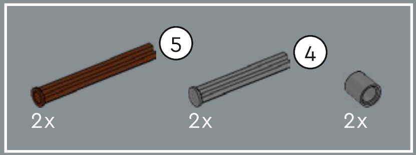

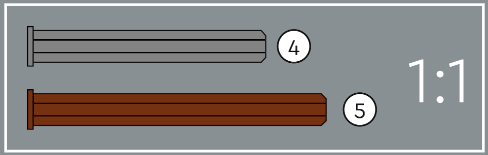

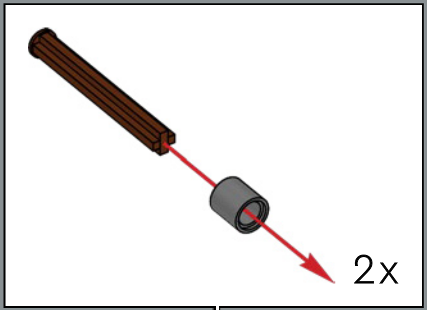

142

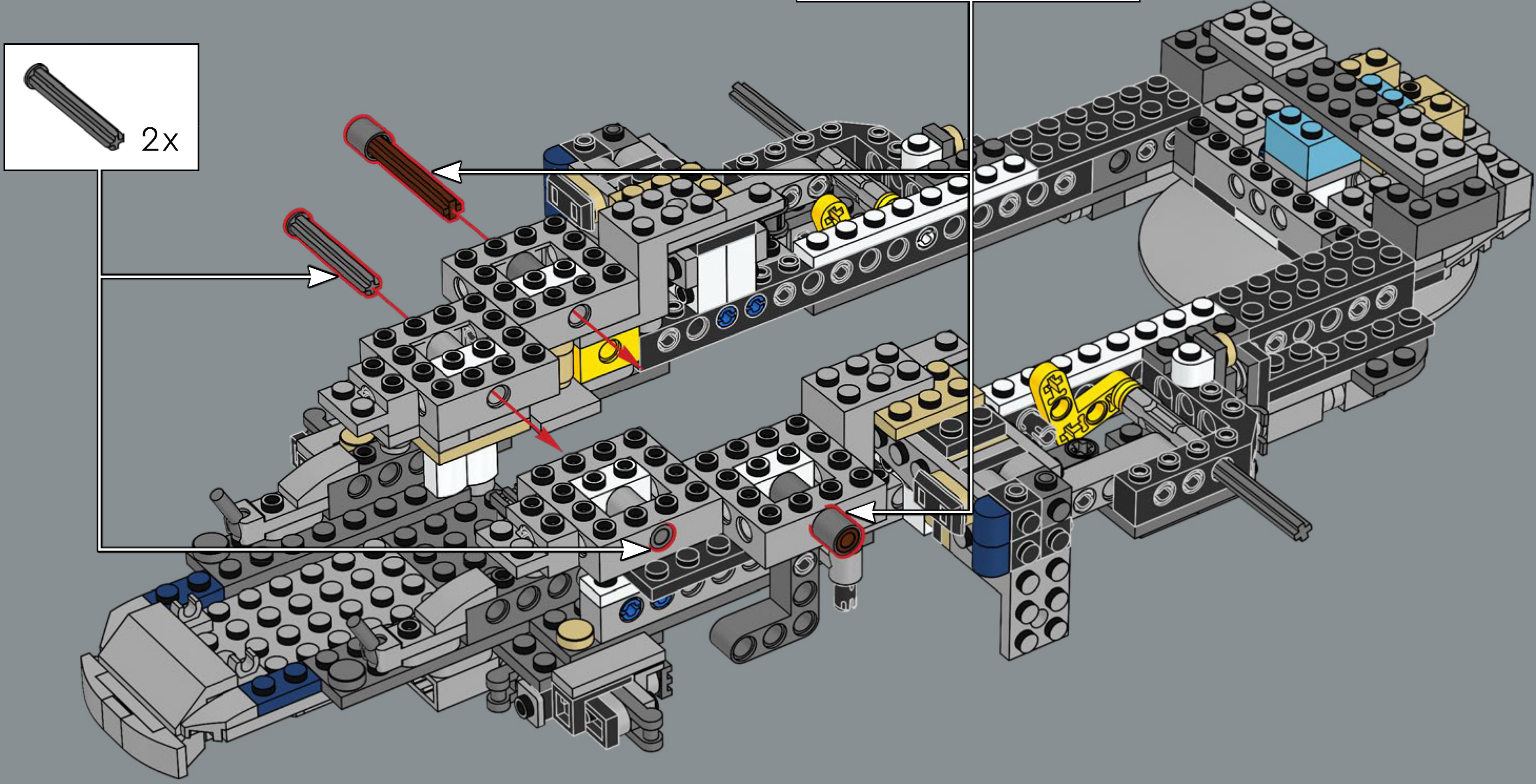

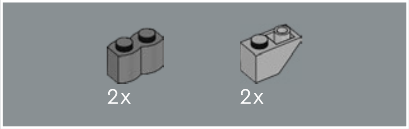

143

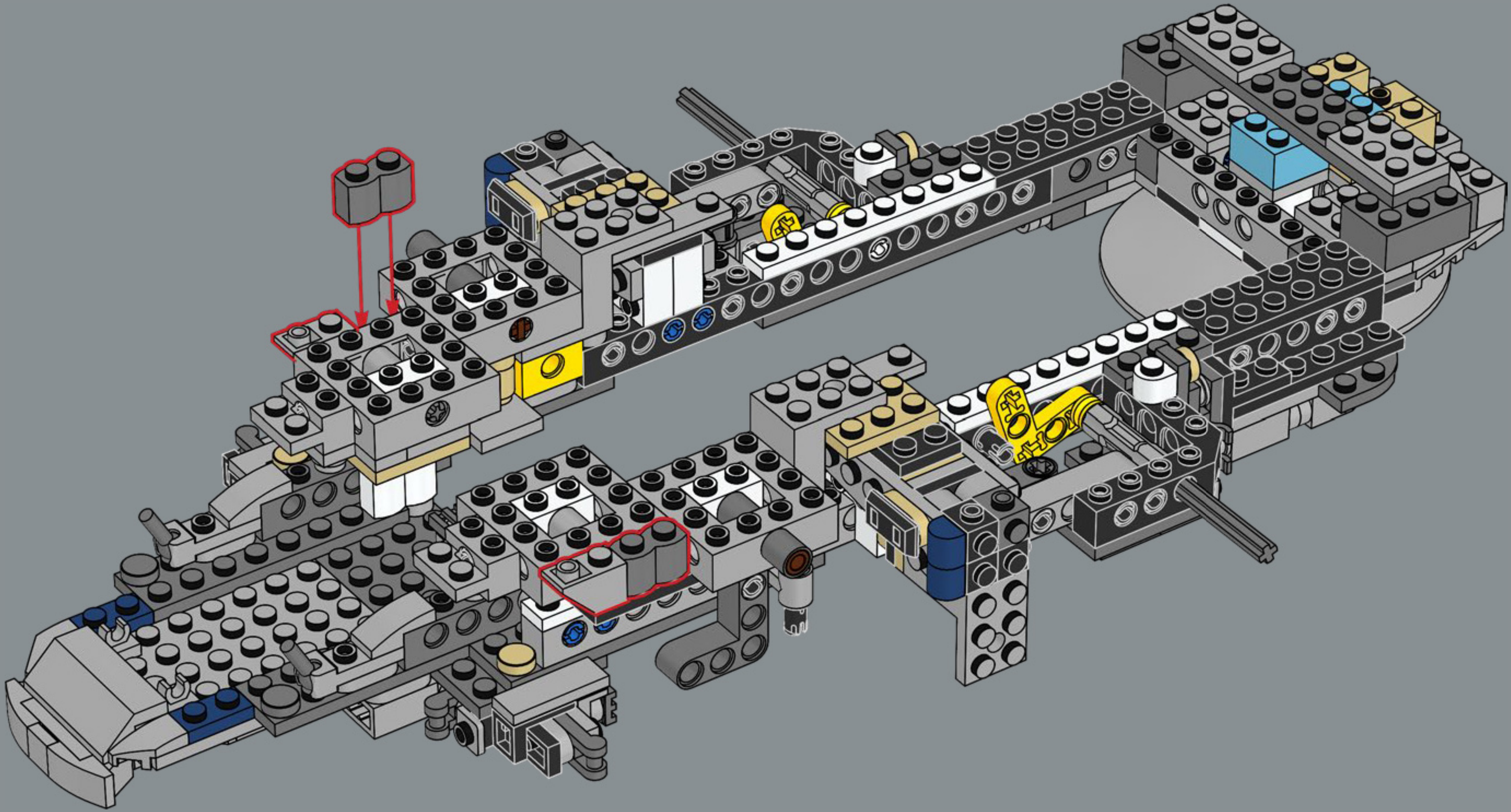

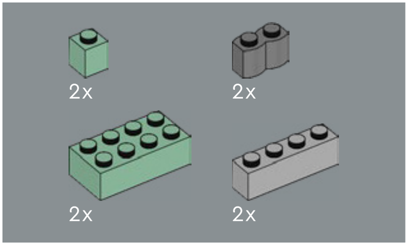

144

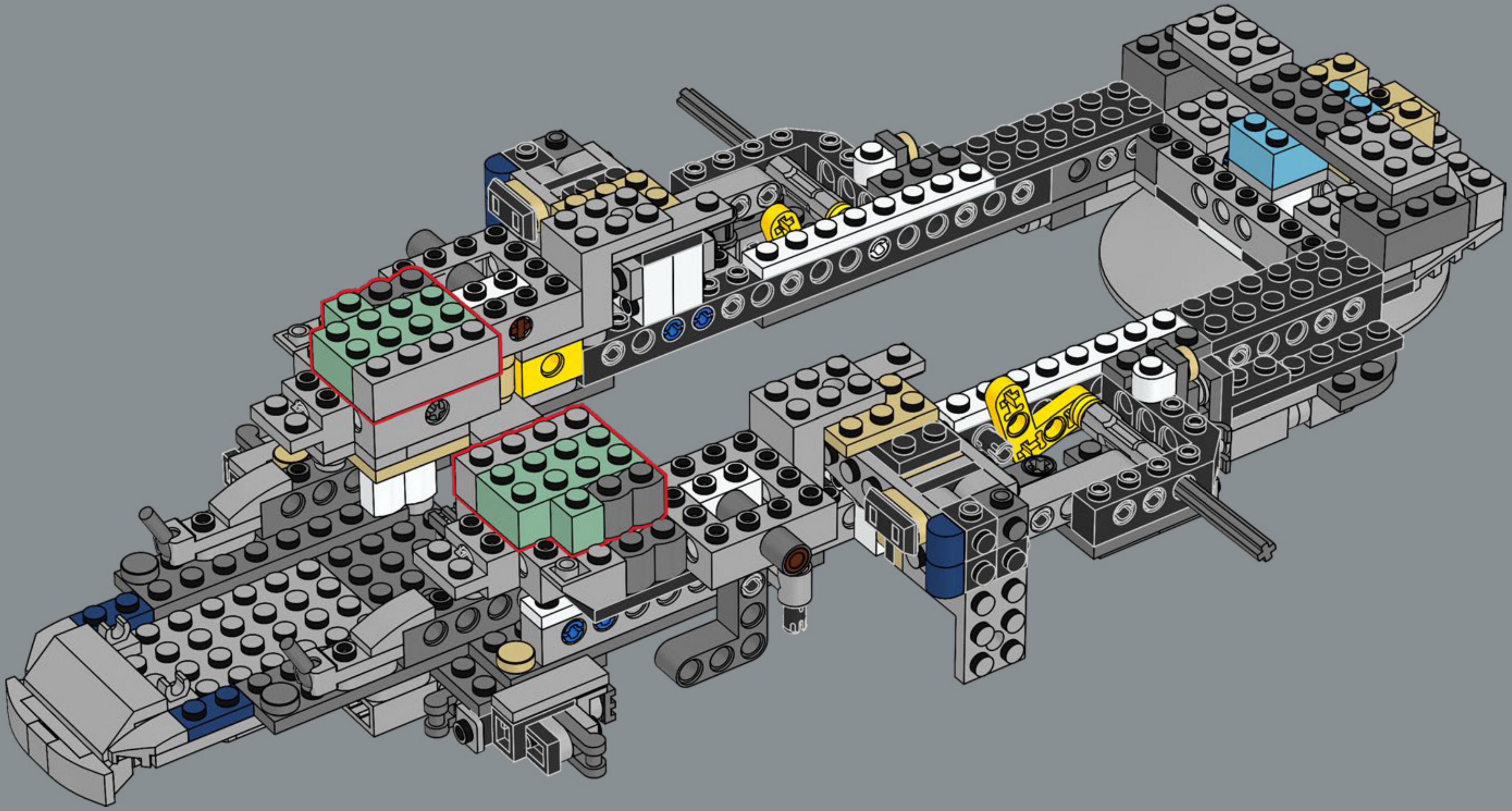

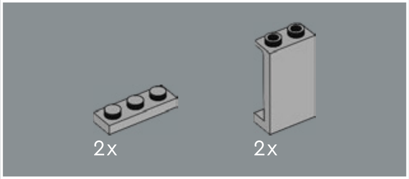

145

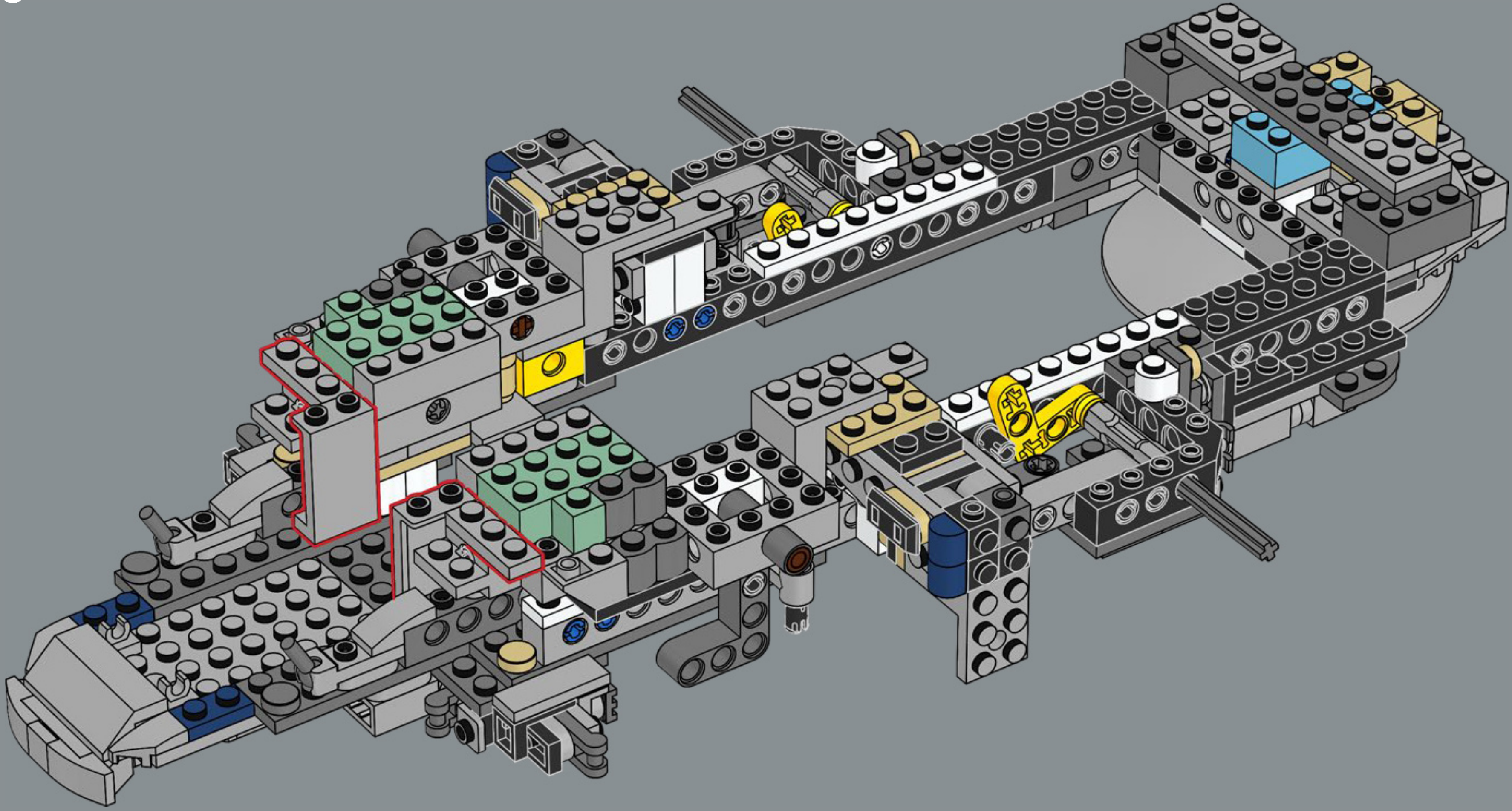

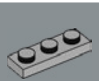

2x

146

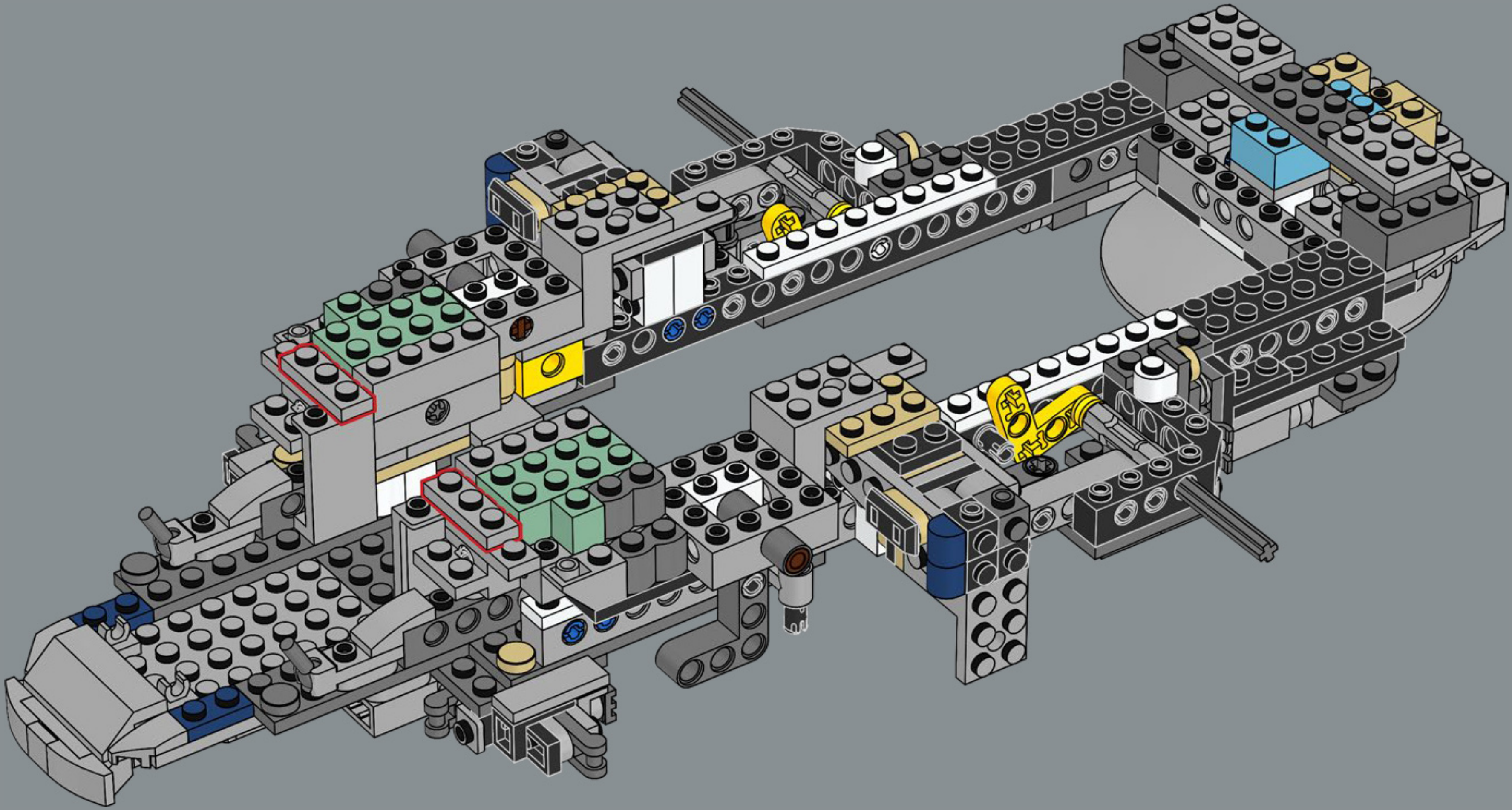

147

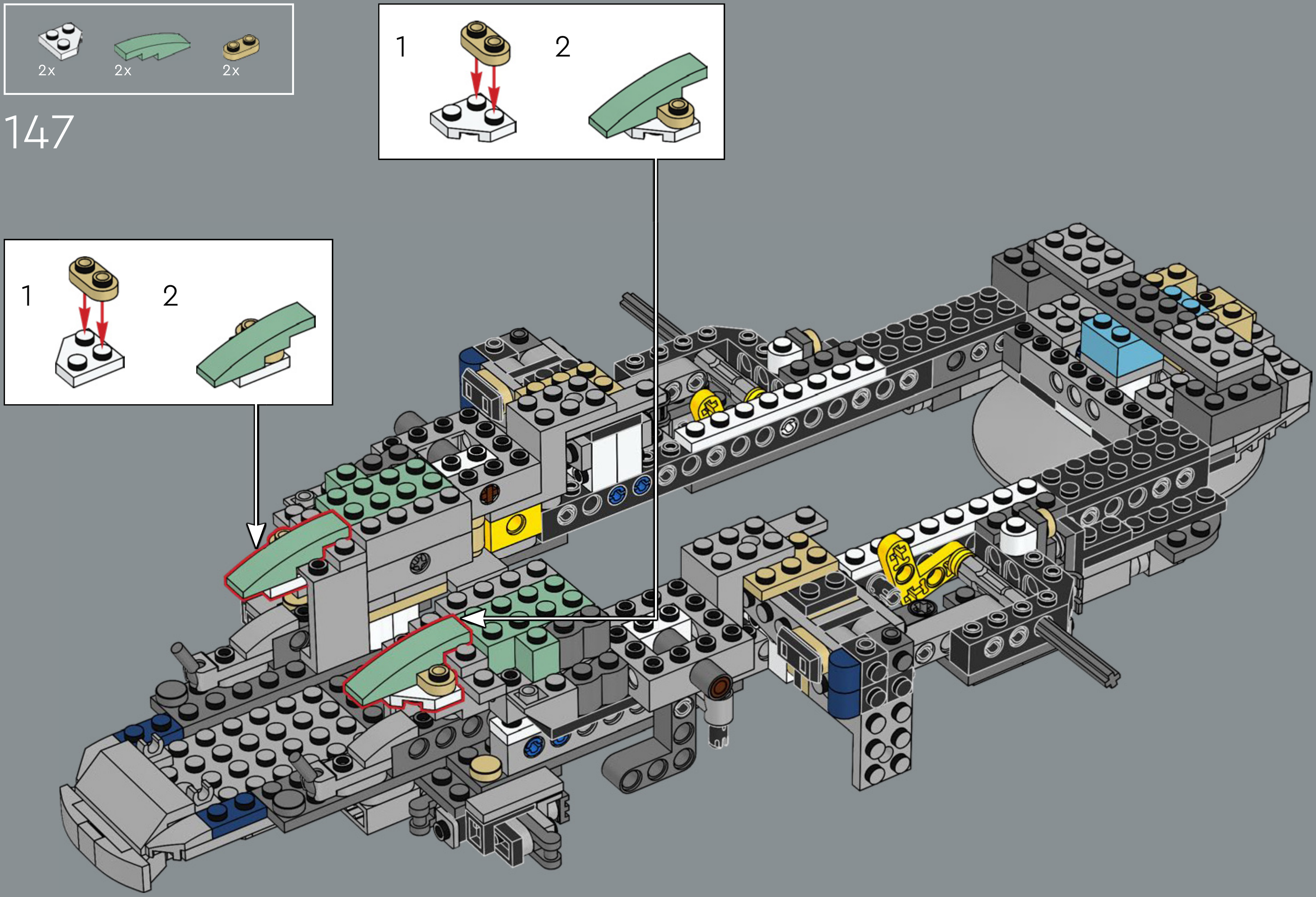
2x
2x
2x
1
2
1
2

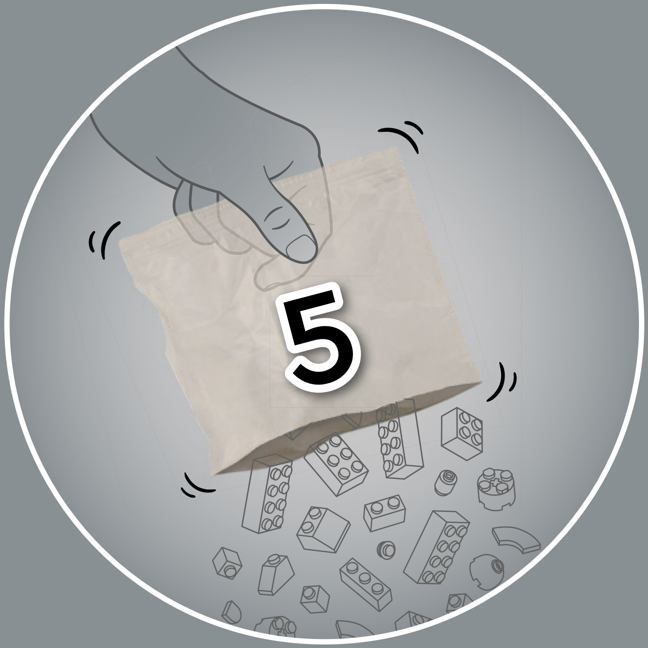

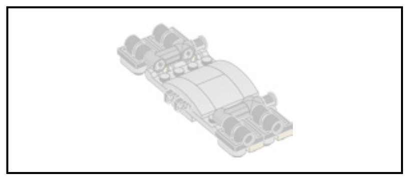

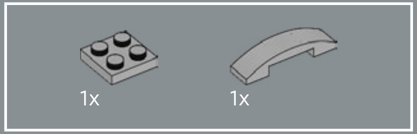

148

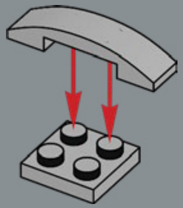

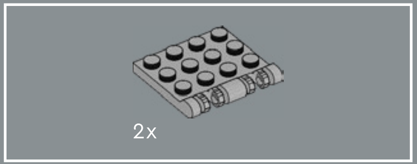

149

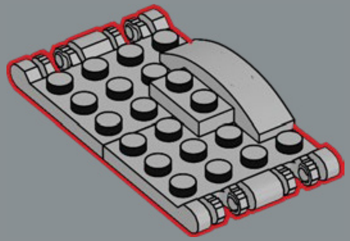

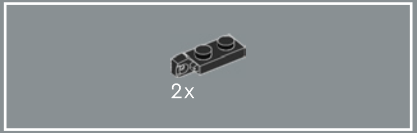

150

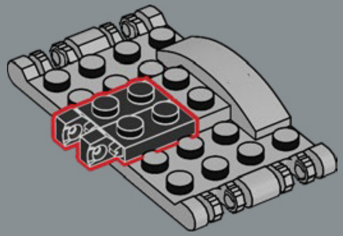

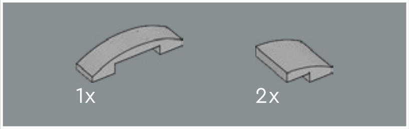

151

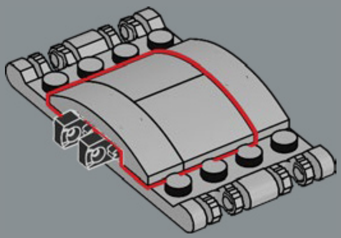

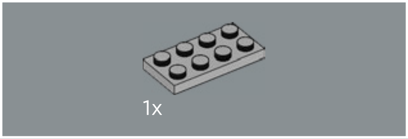

152

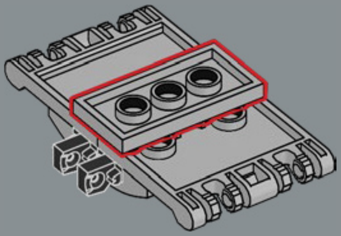

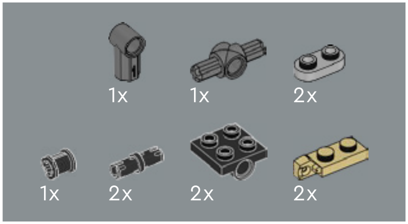
1x
1x
2x
1x
2x
2x
2x

153

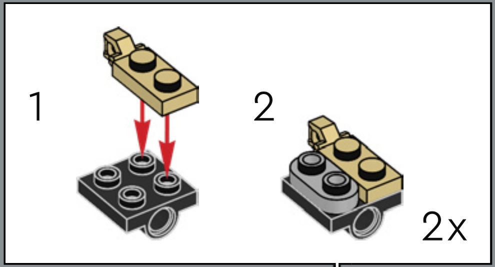

1

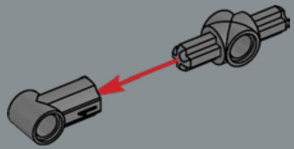

2

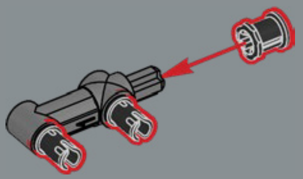

3

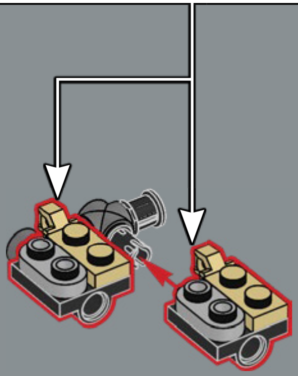

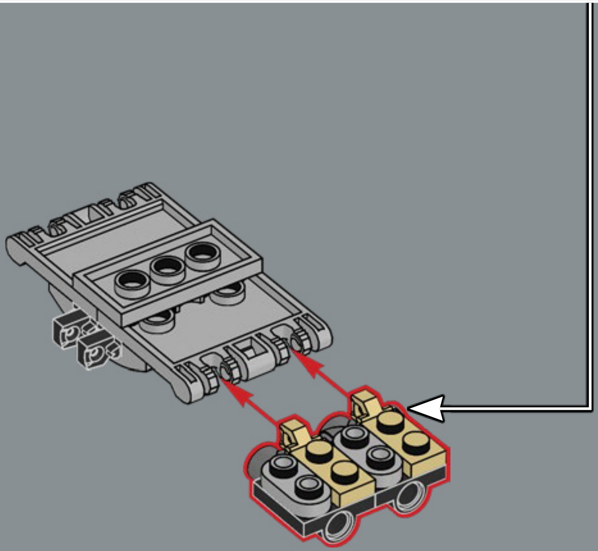

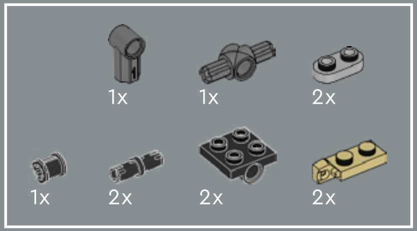
1x
1x
2x
1x
2x
2x
2x

154

1

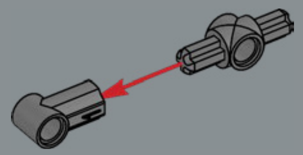

2

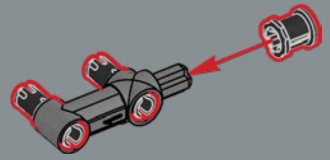

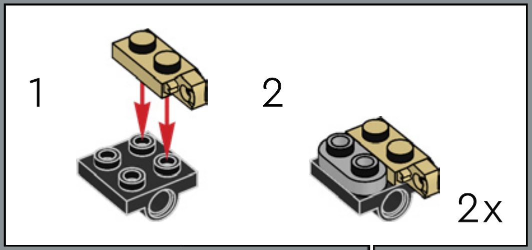

3

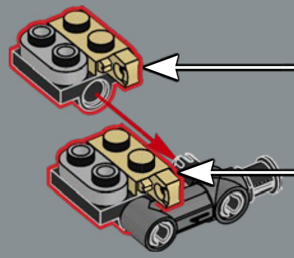

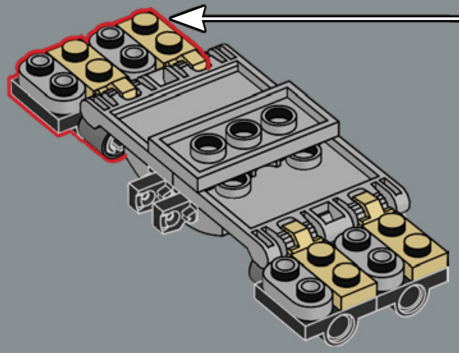

155

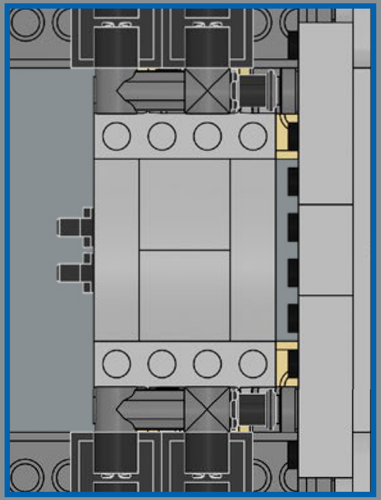

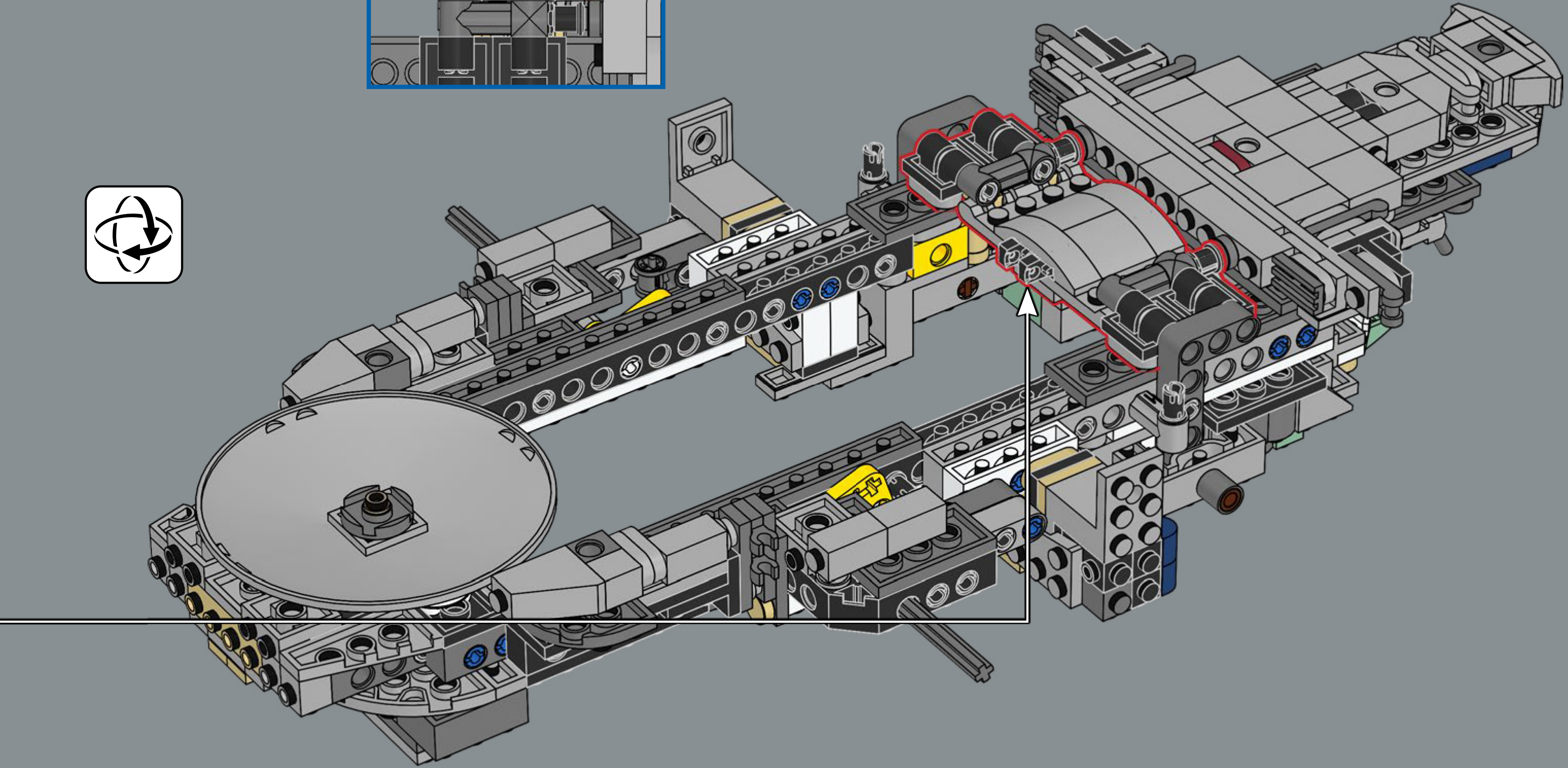

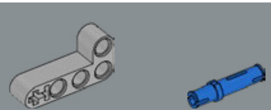

156

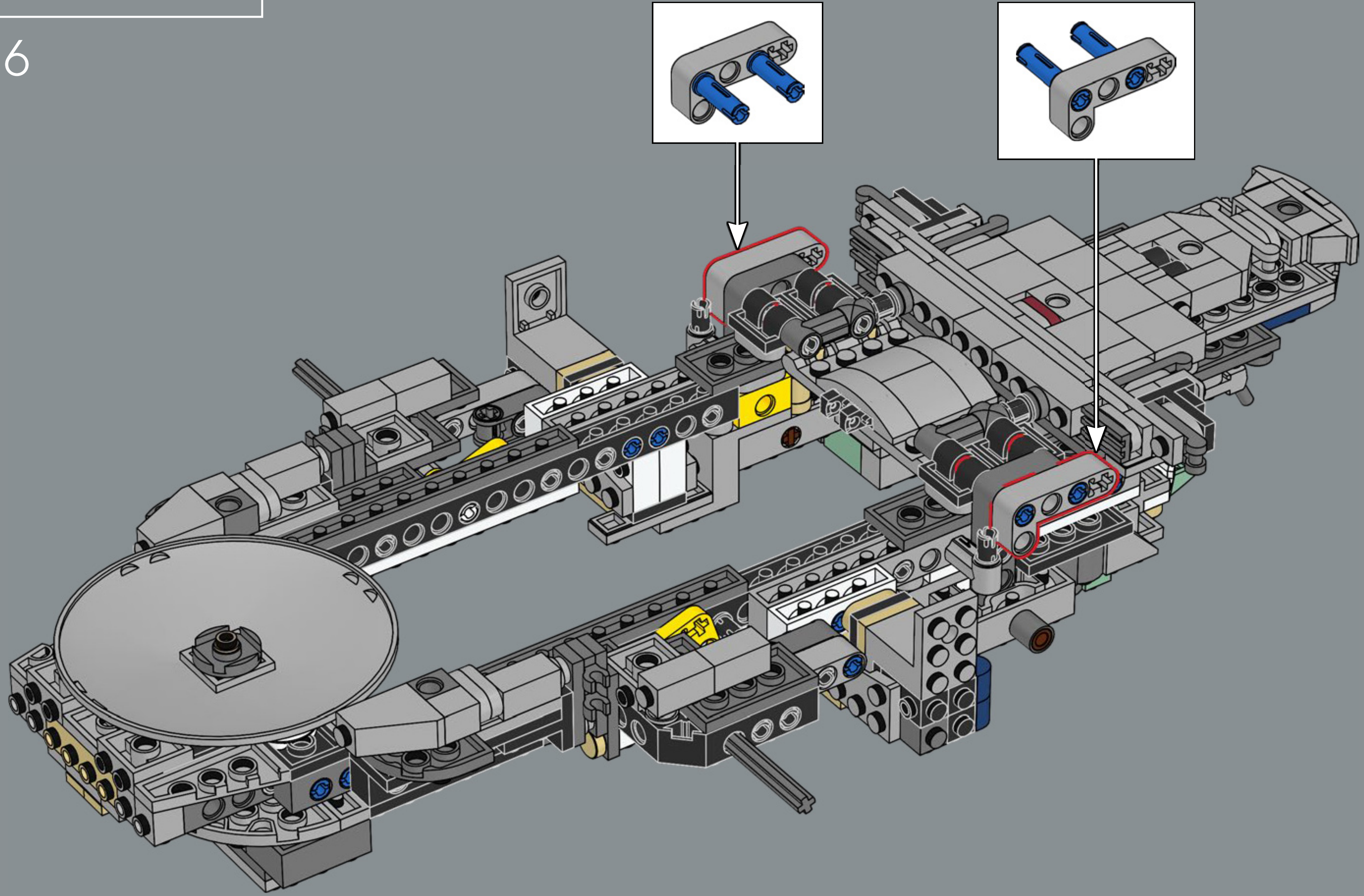

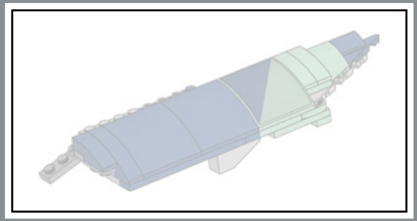

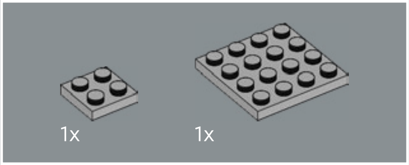

157

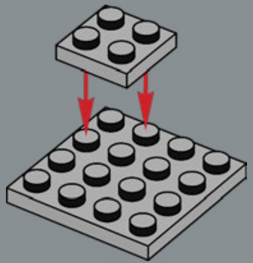

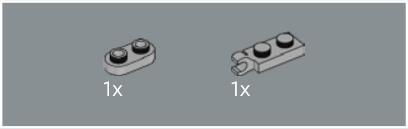

158

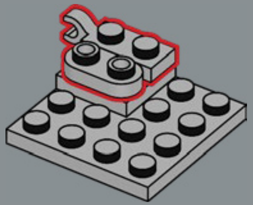

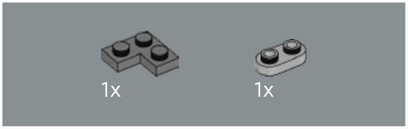

159

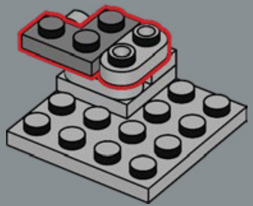

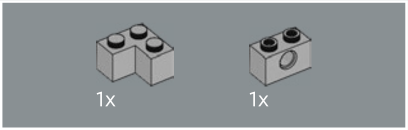

160

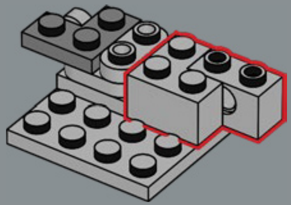

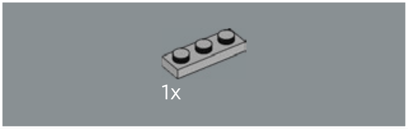

161

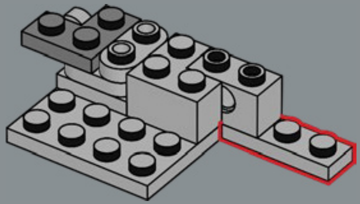

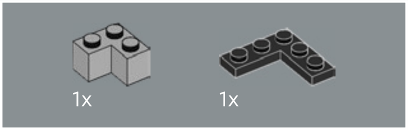

162

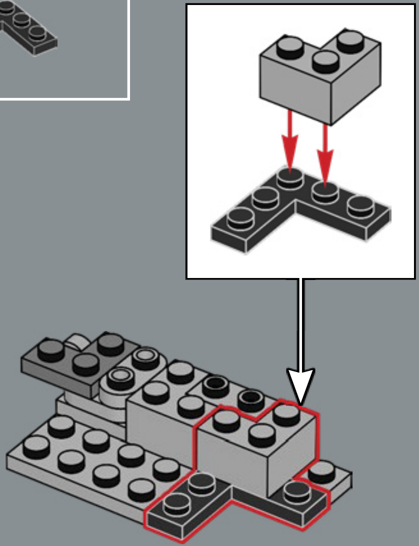

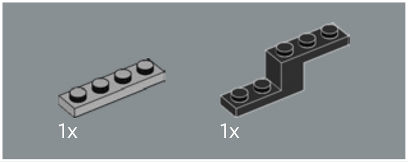

163

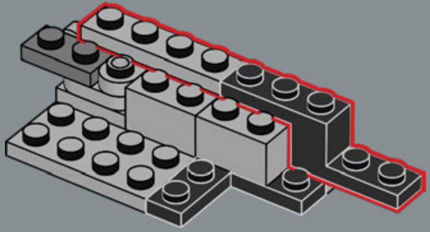

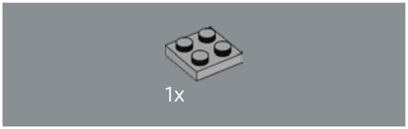

164

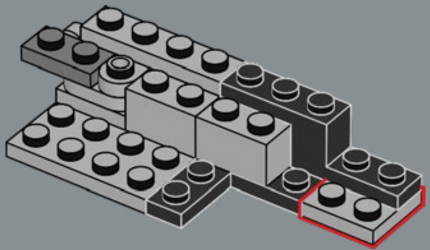

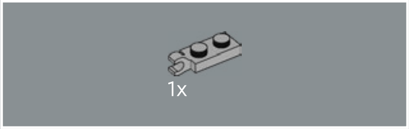

165

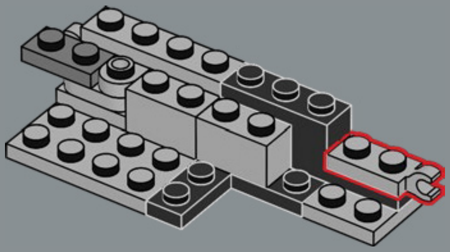

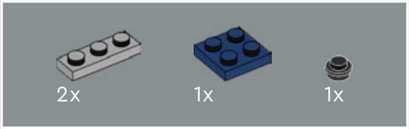

166

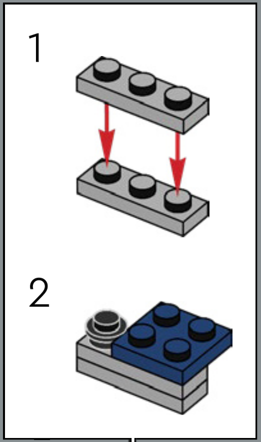

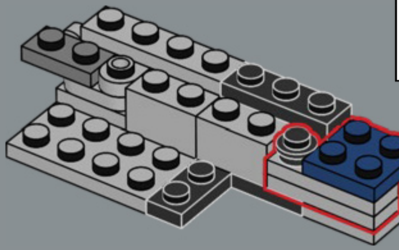

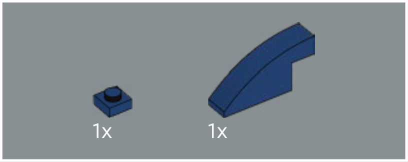

167

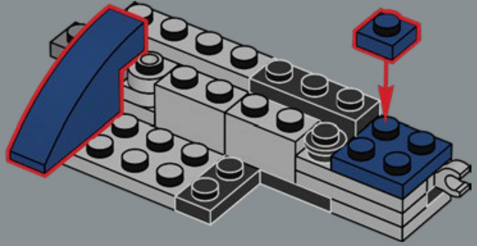

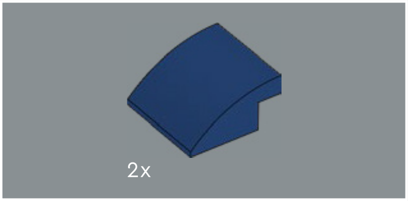

168

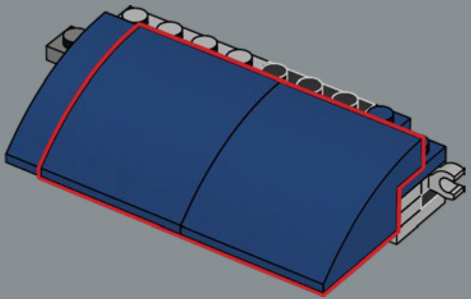

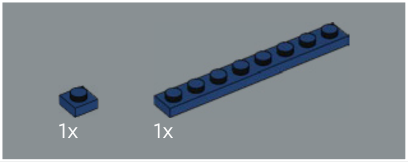

169

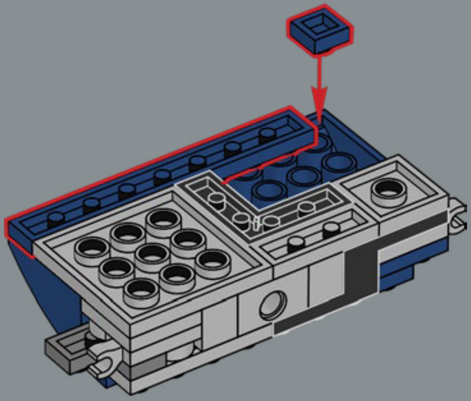

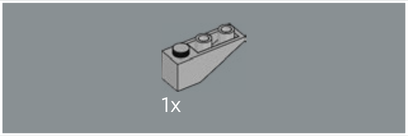

170

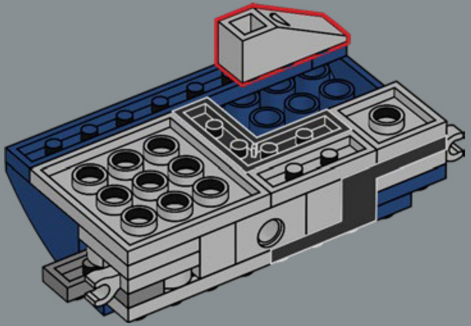

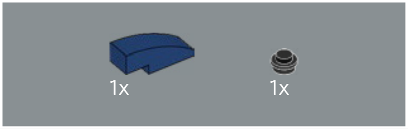

171

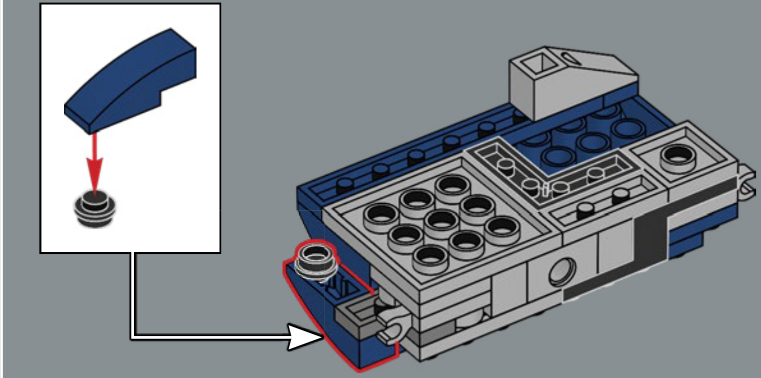

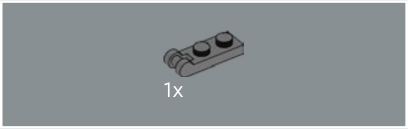

172

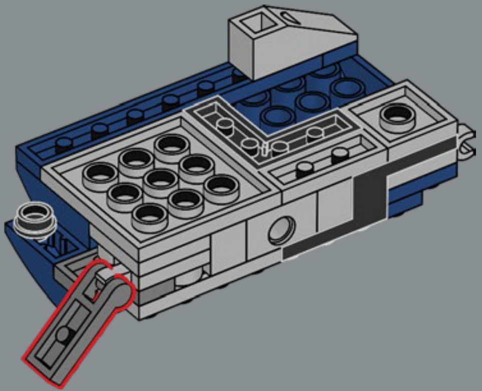

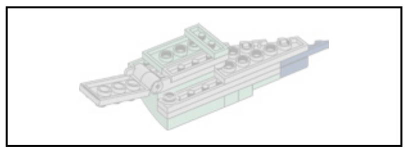

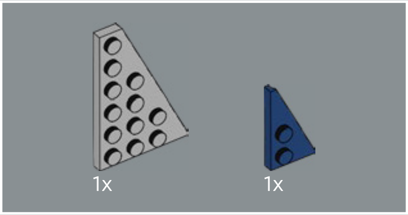

173

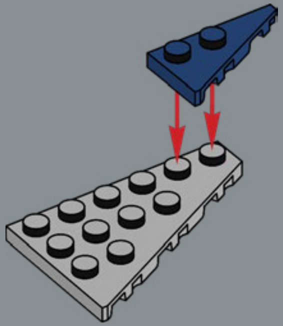

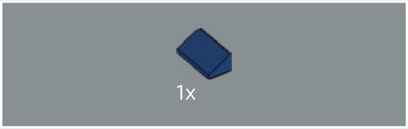

174

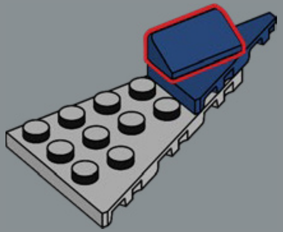

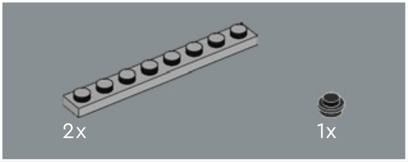

175

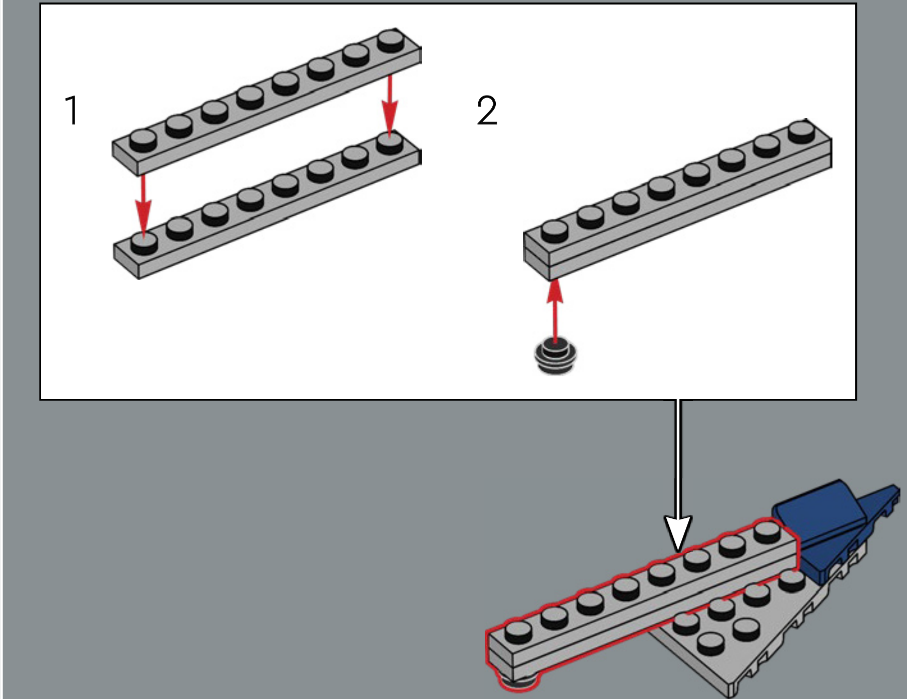

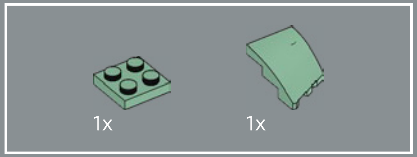

176

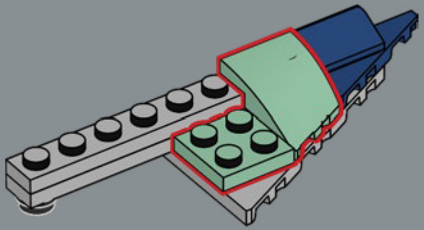

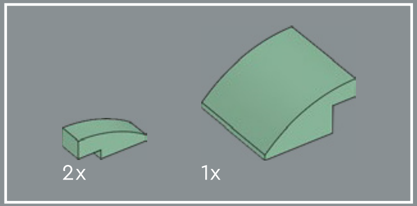

177

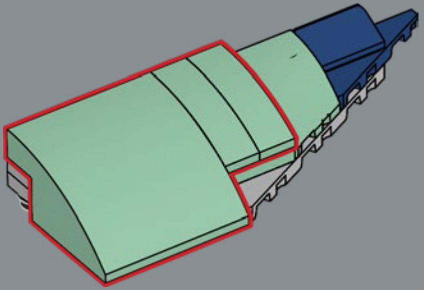

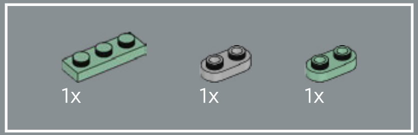

178

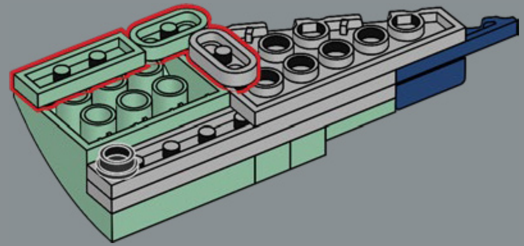

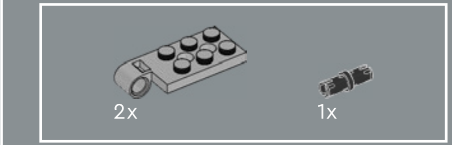

179

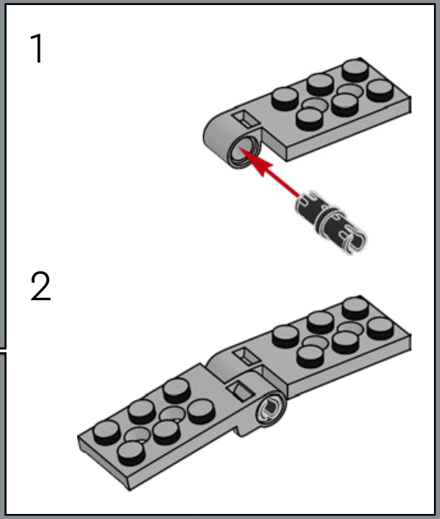

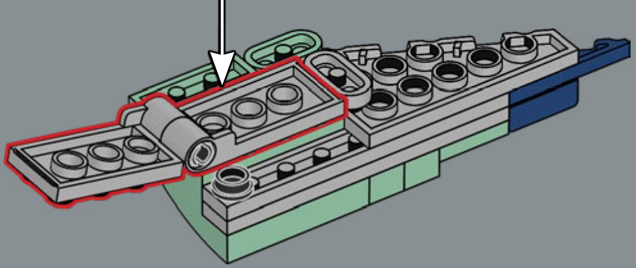

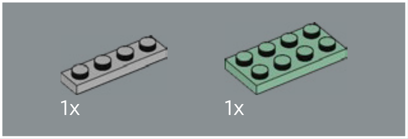

180

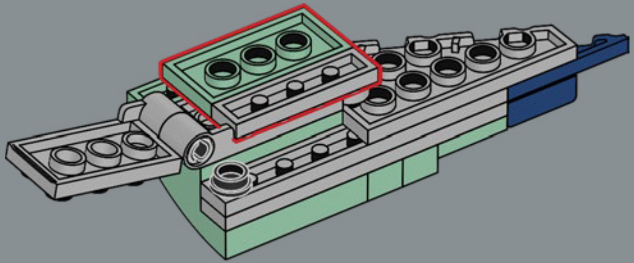

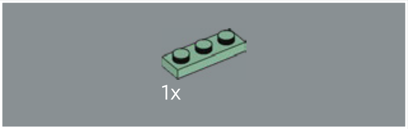

181

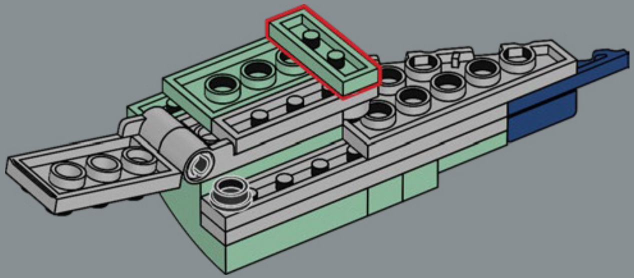

182

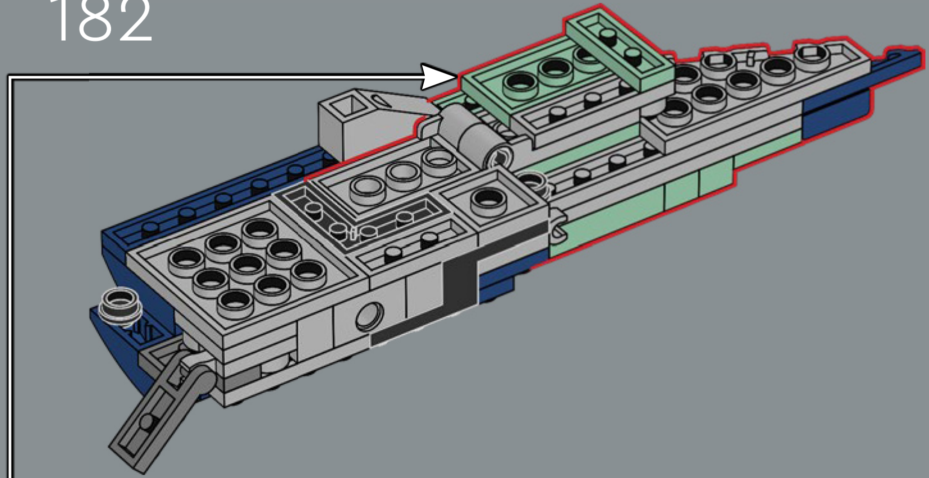

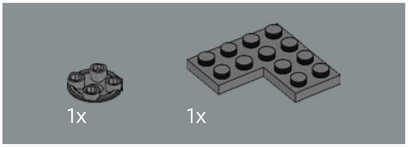

183

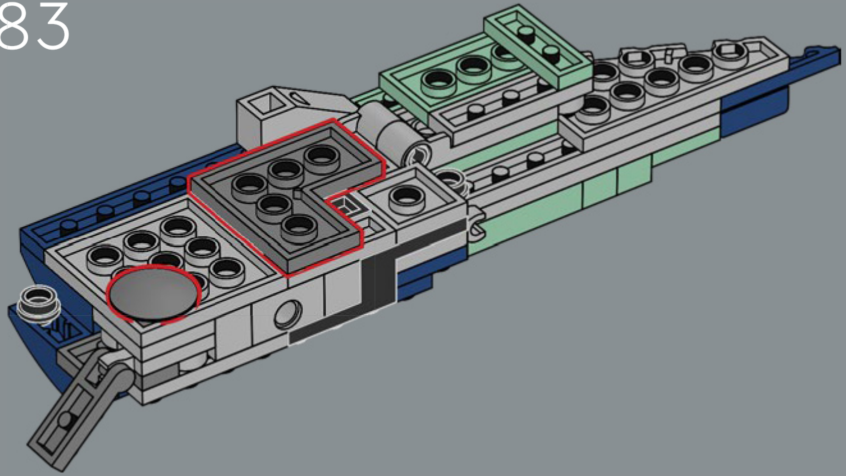

184

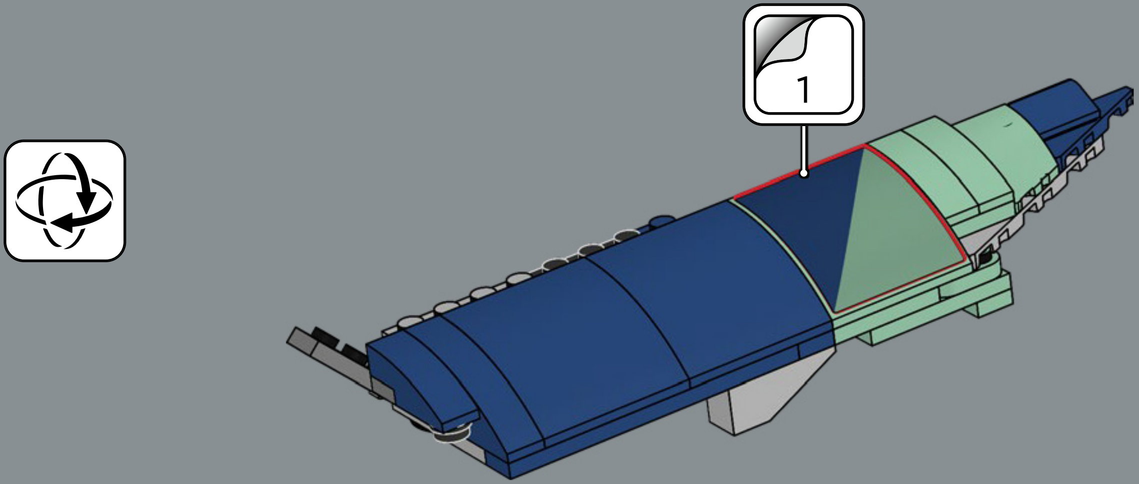

185

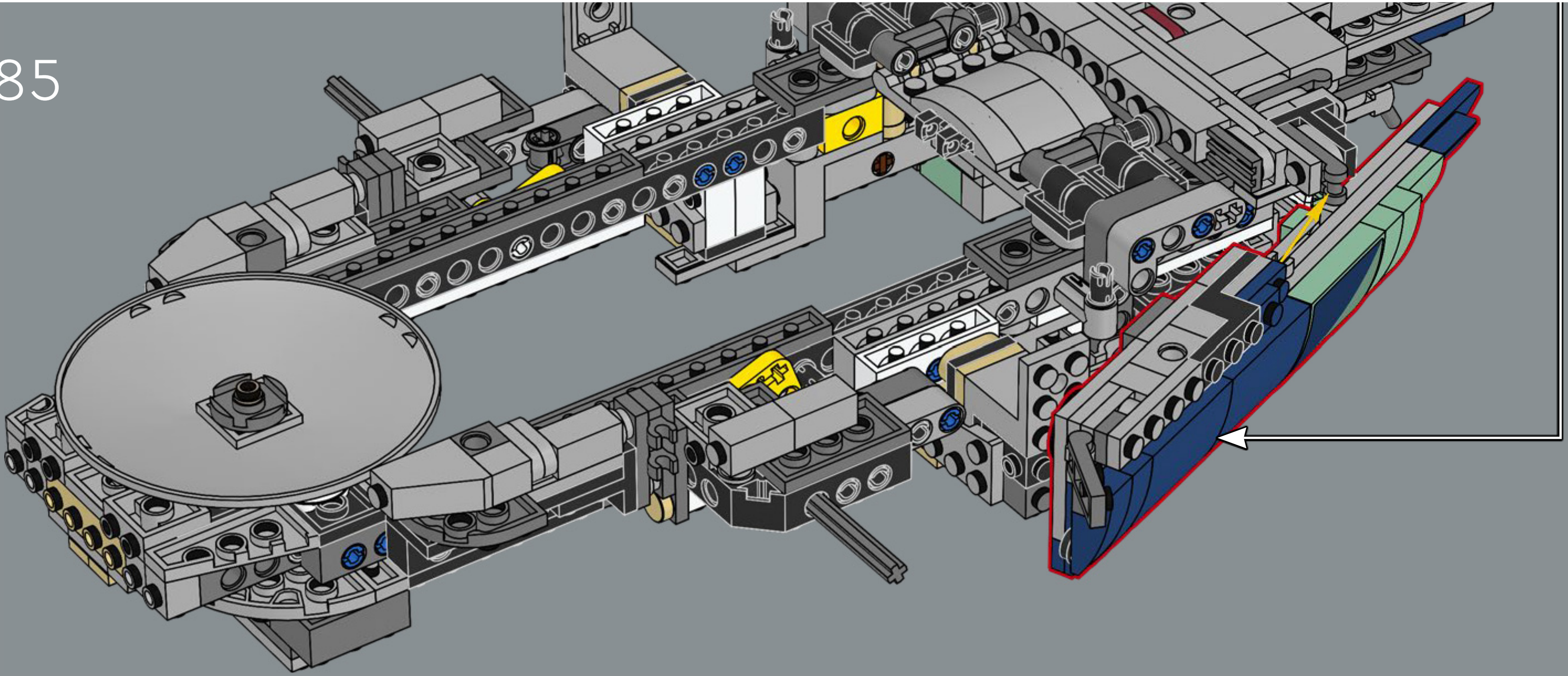

186

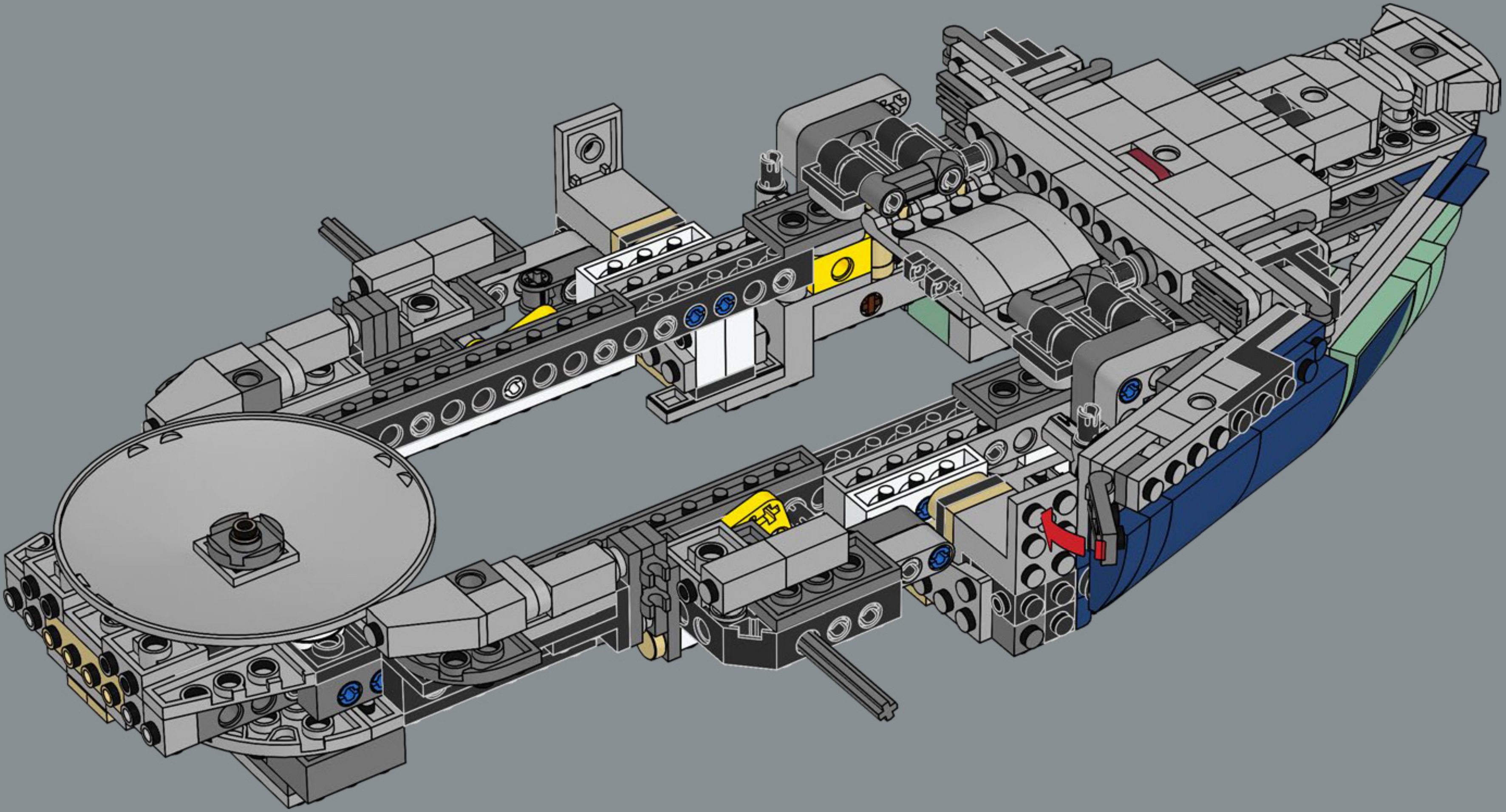

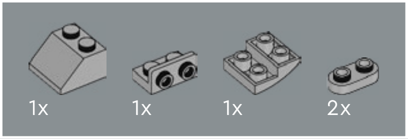

187

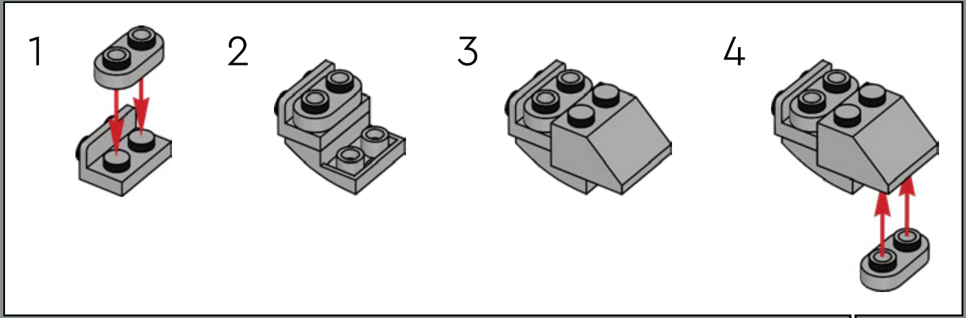

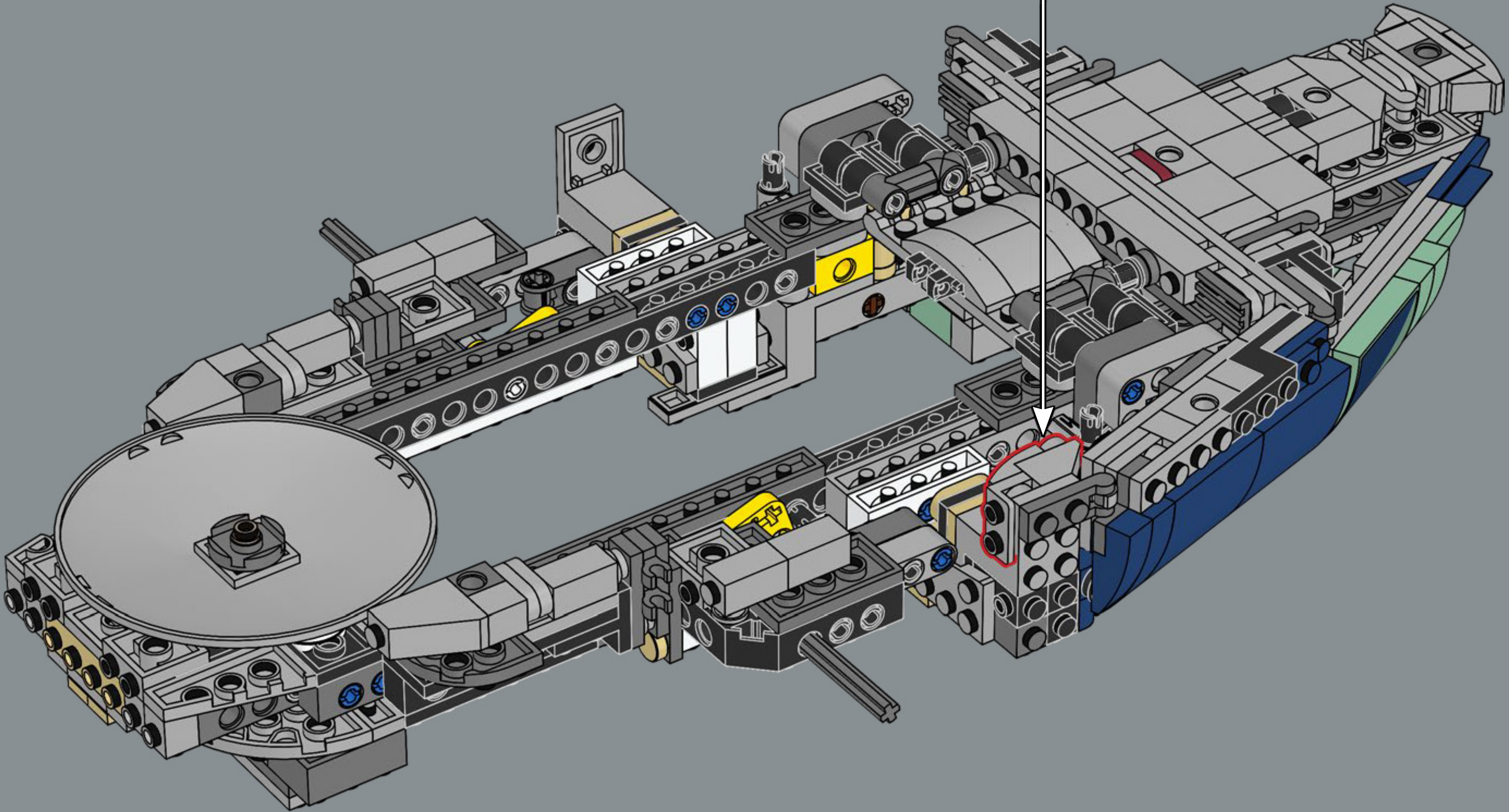

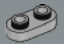
1x

188

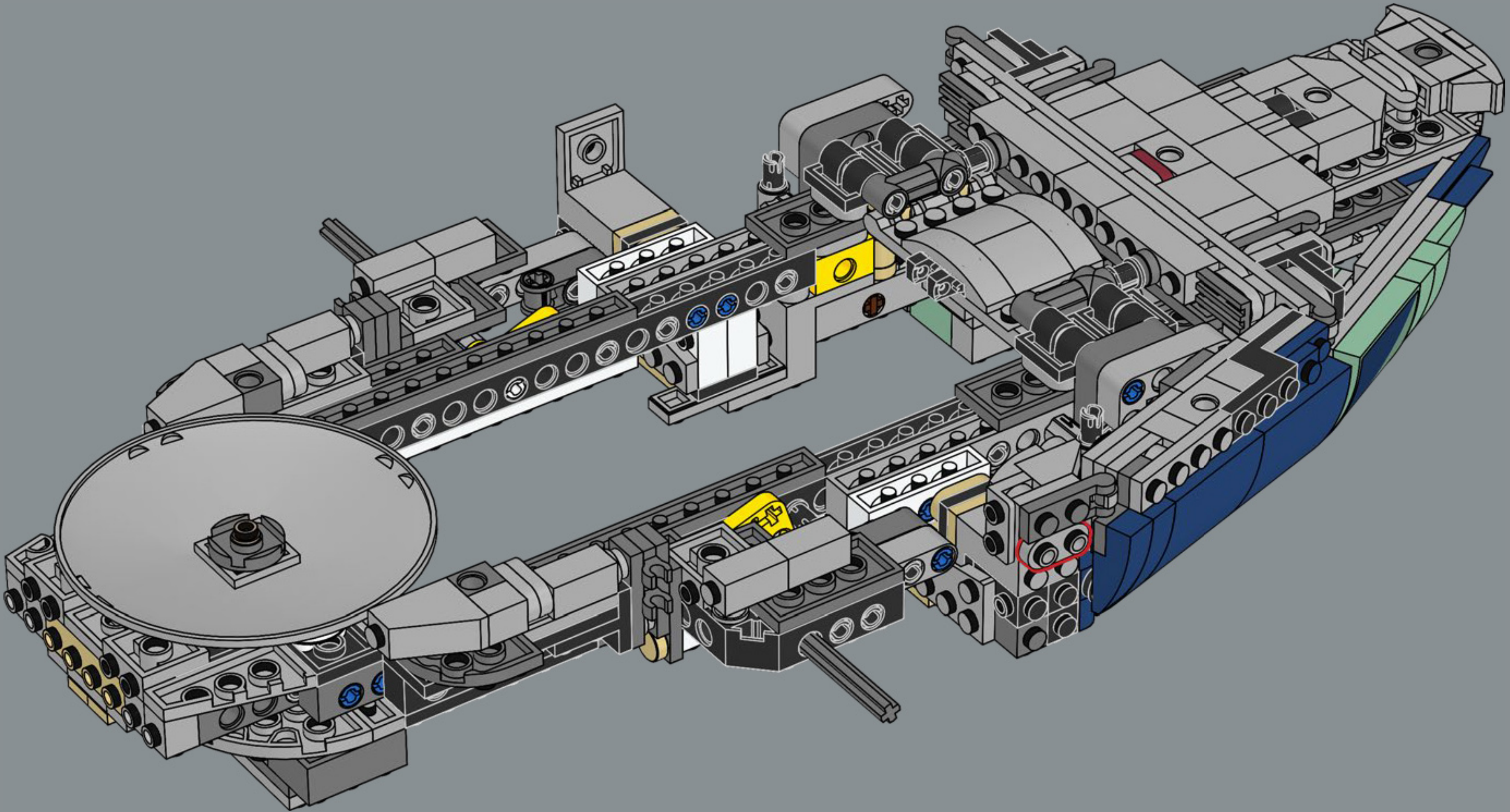

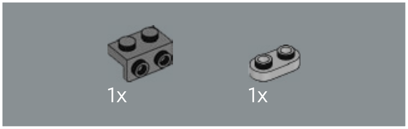

189

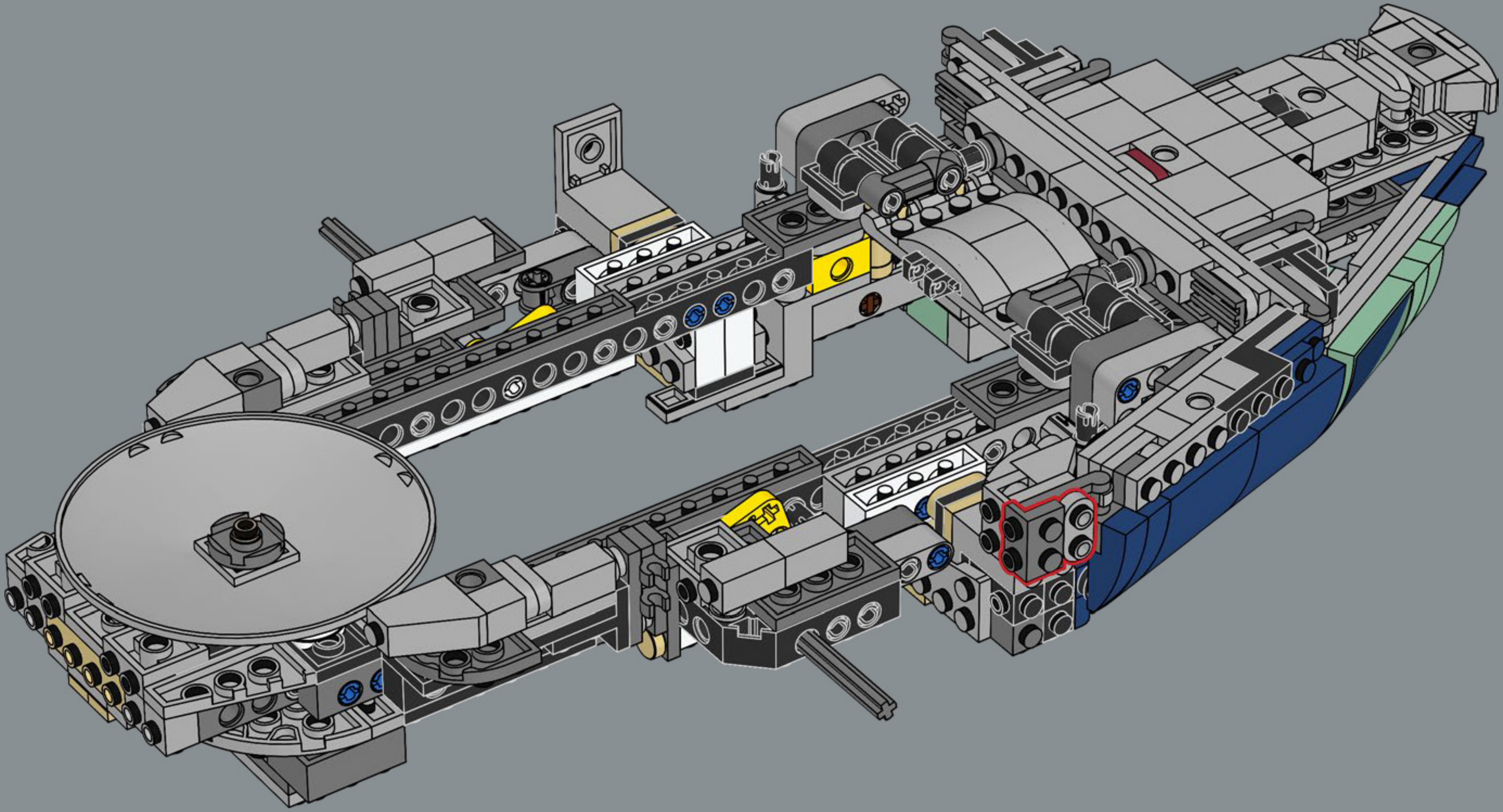

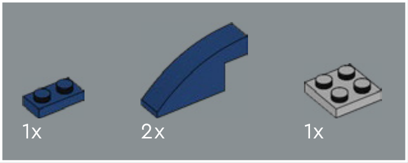

190

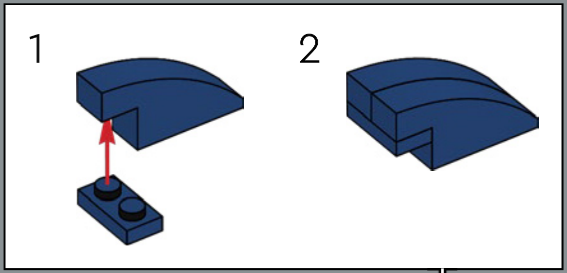

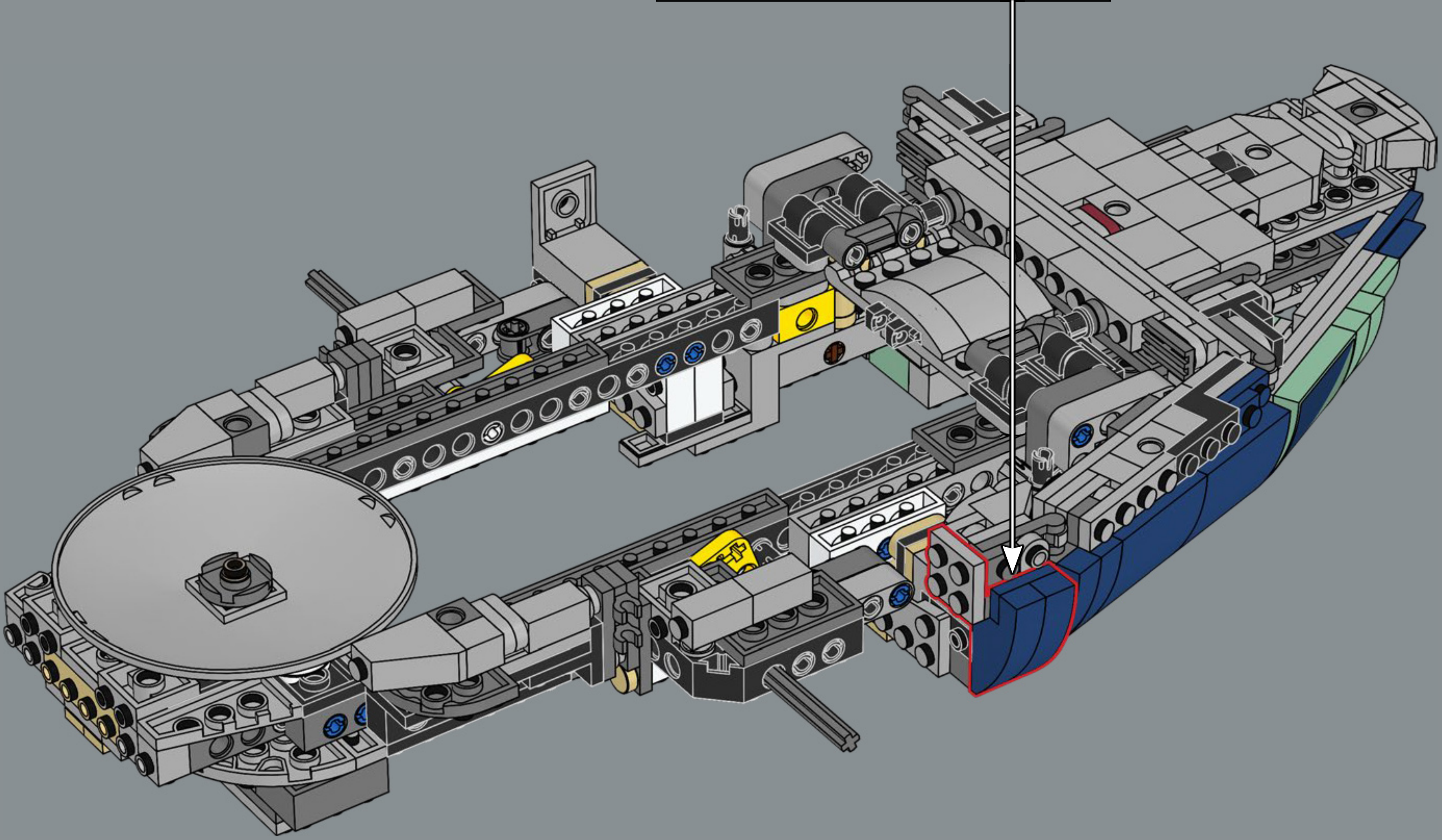

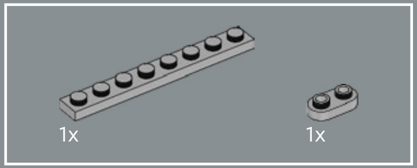

191

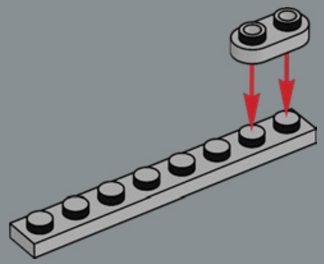

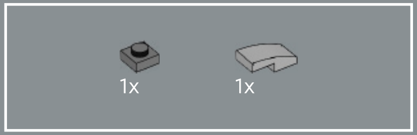

192

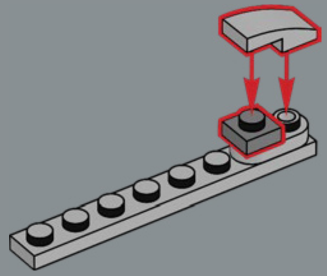

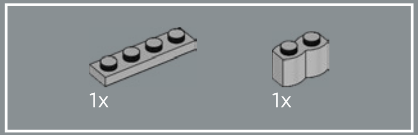

193

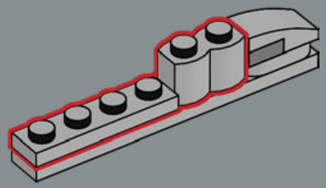

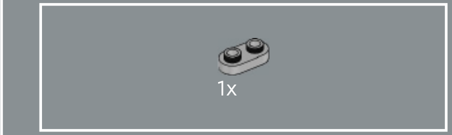

194

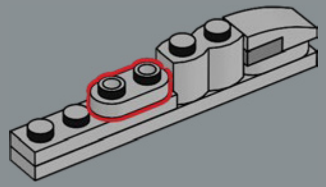

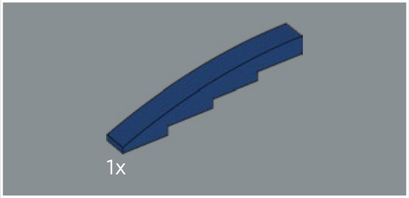

195

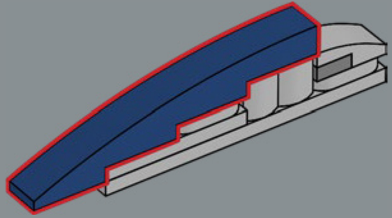

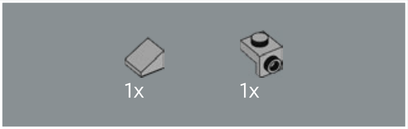

196

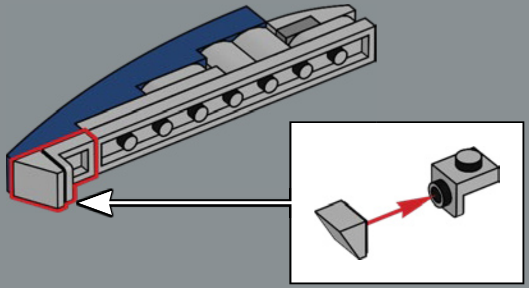

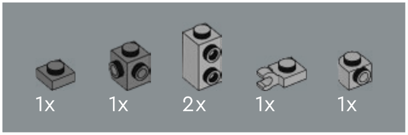
1x
1x
2x
1x
1x

197

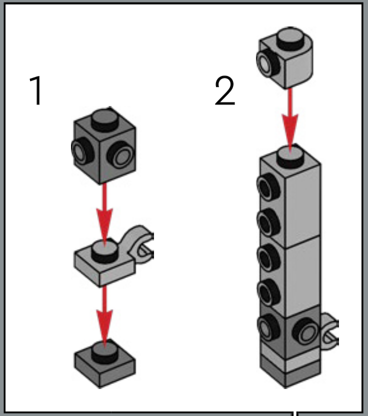

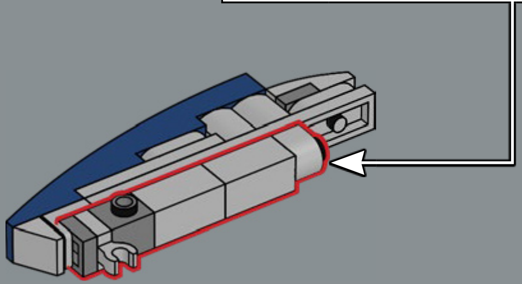

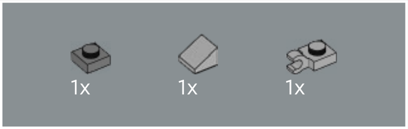

198

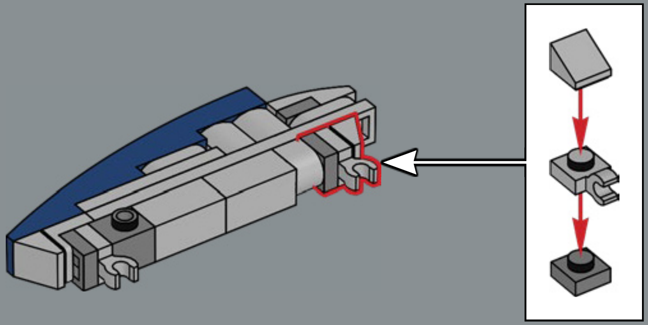

199

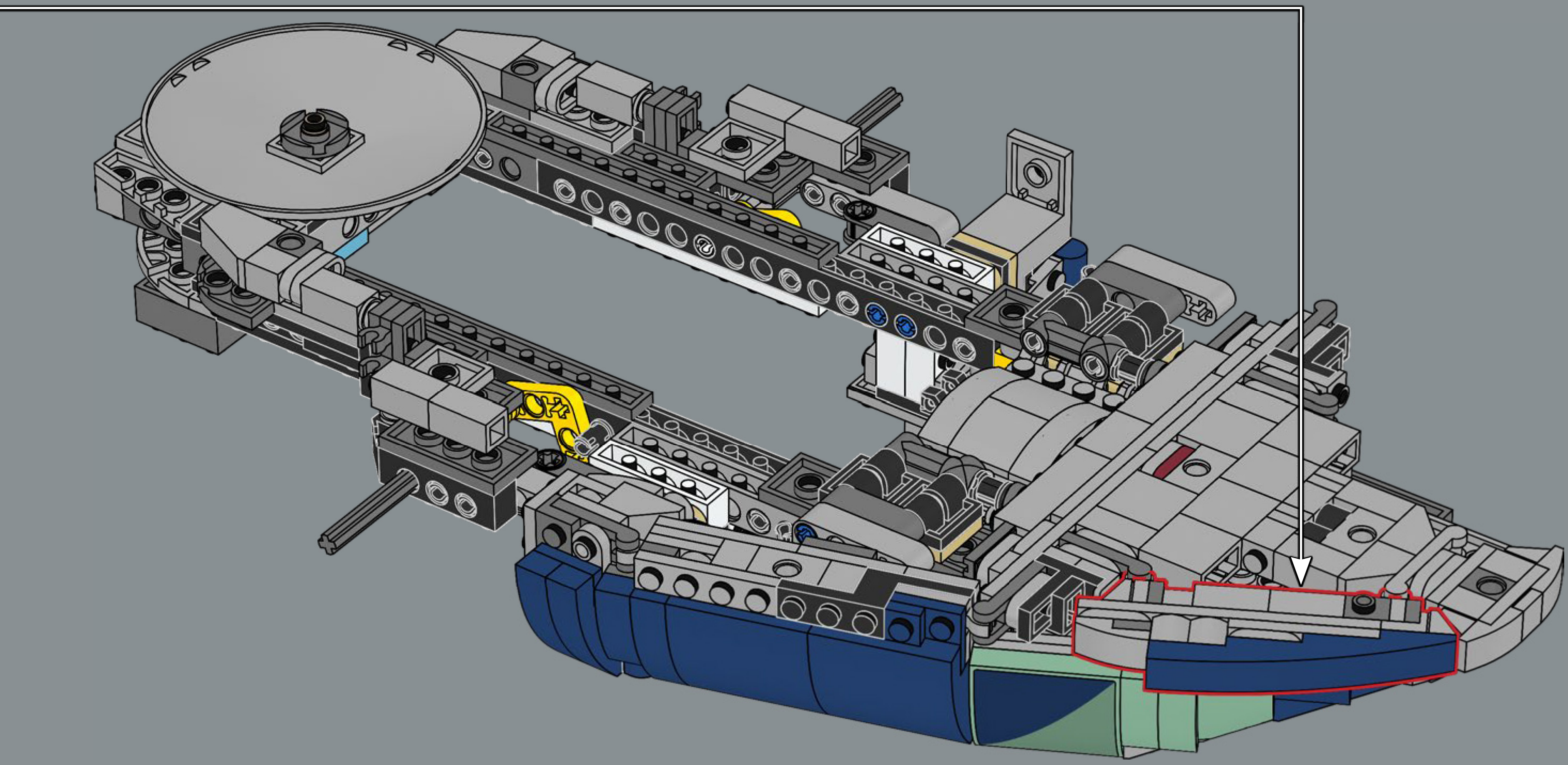

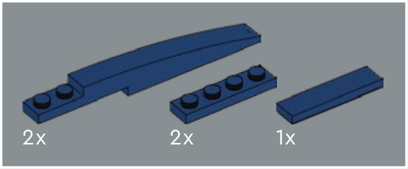

200

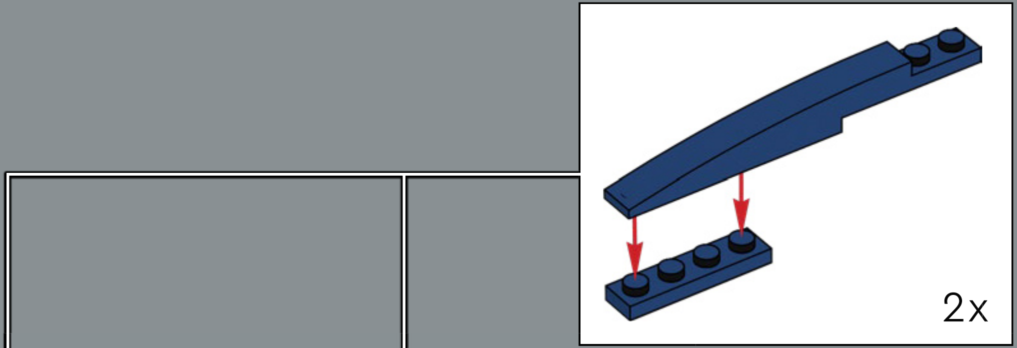

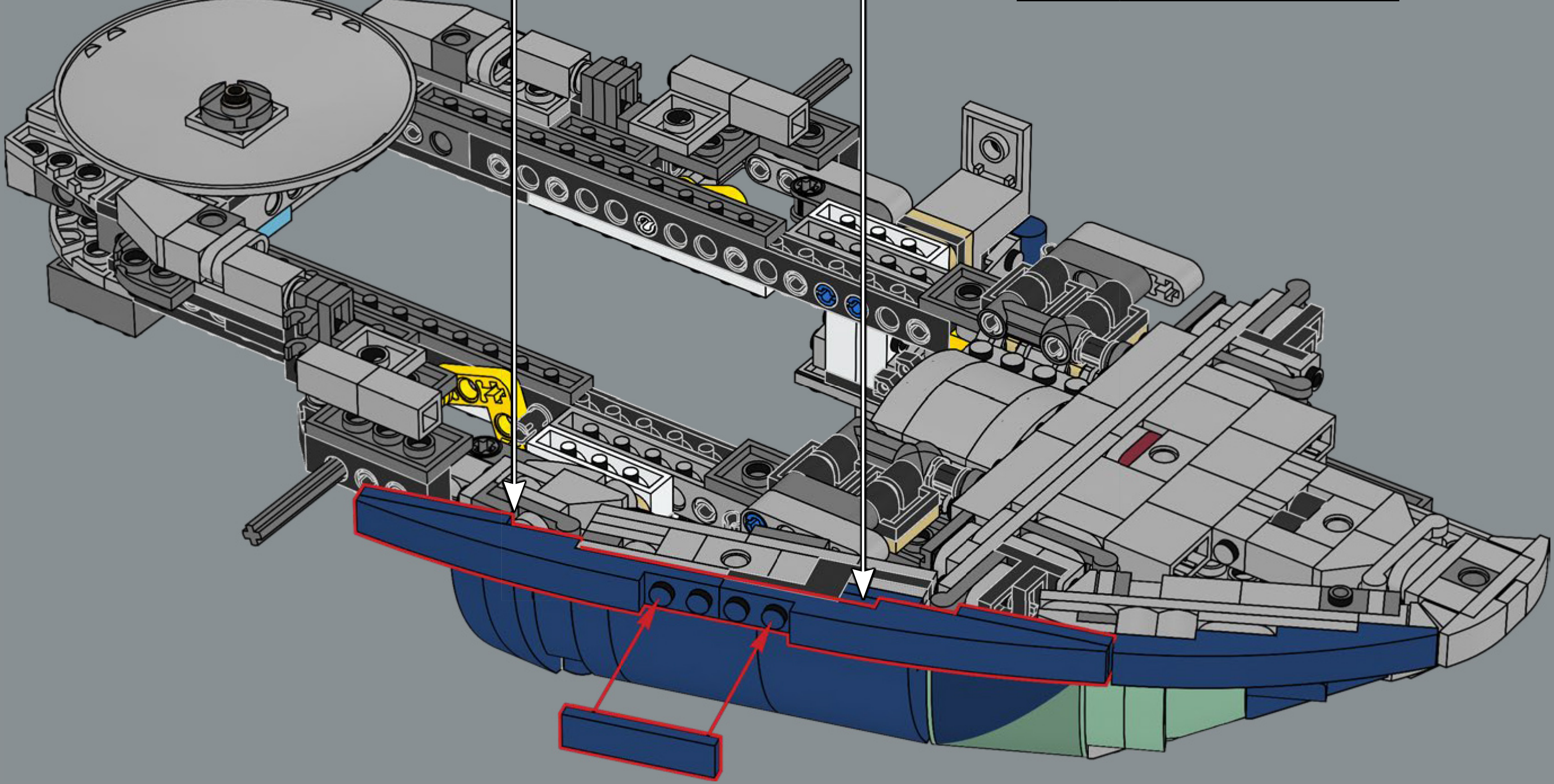

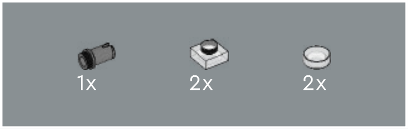

201

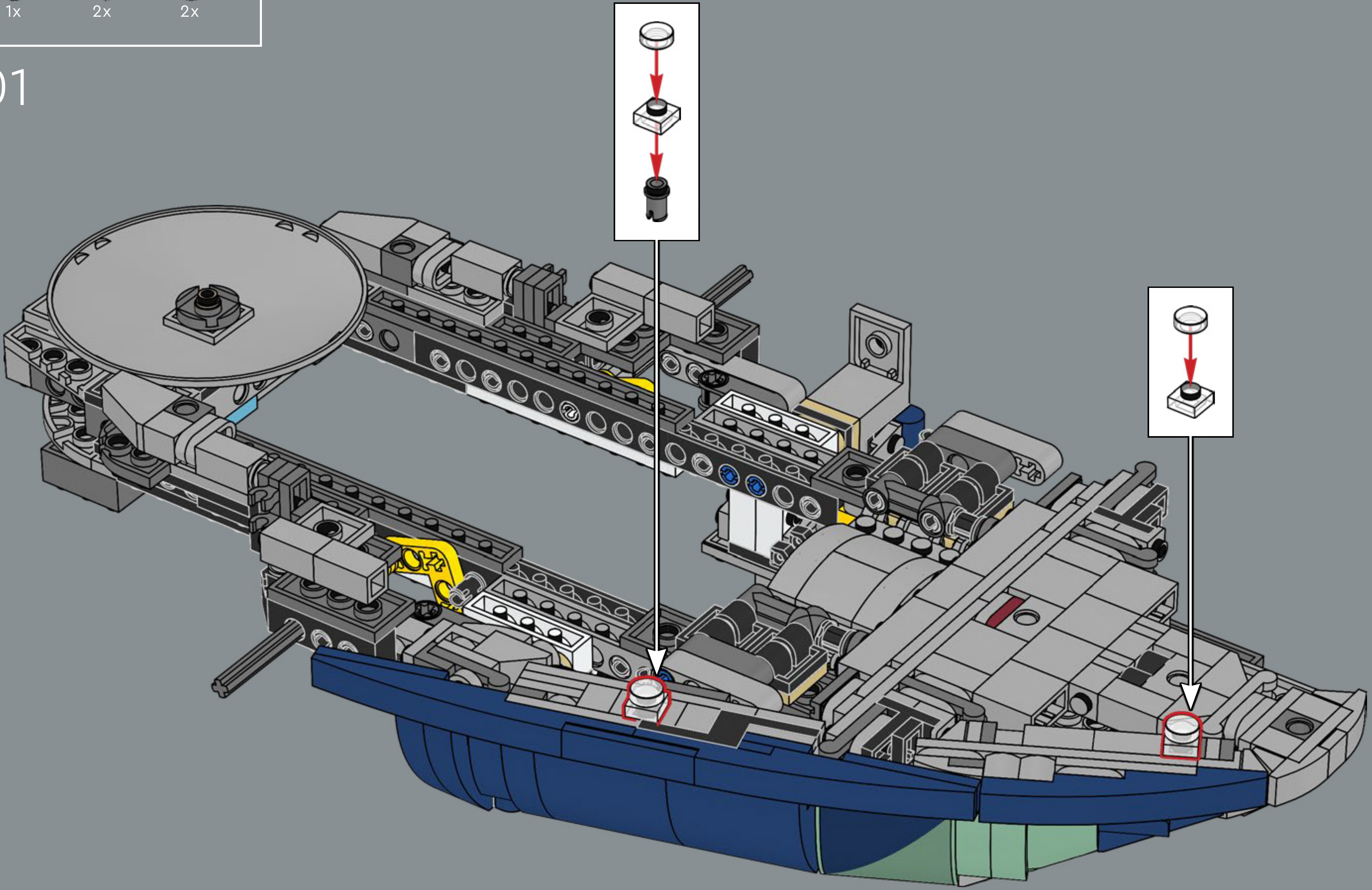

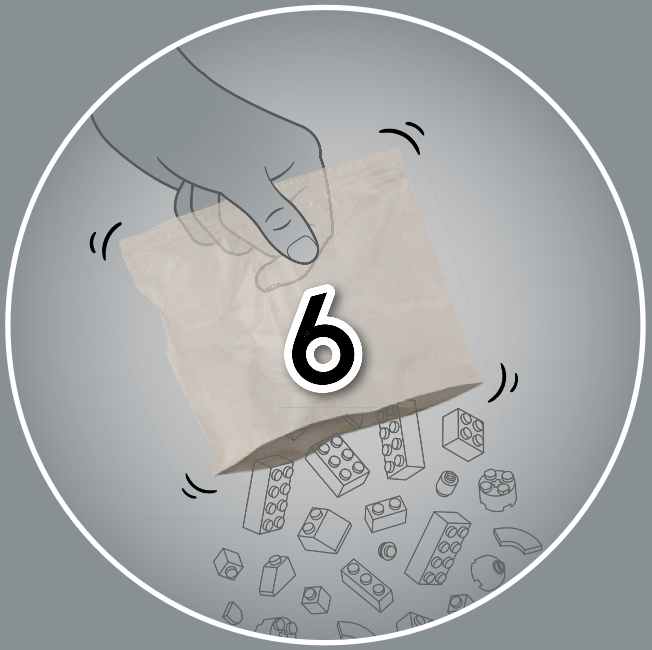

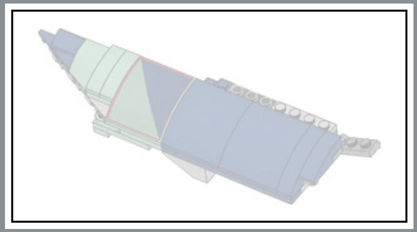

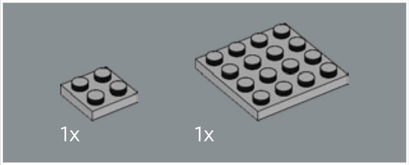

202

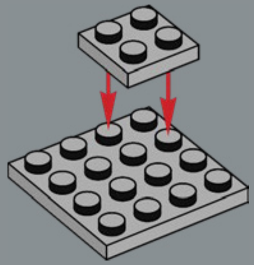

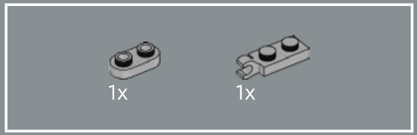

203

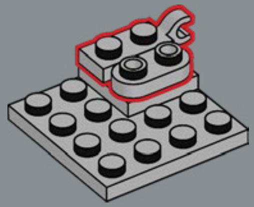

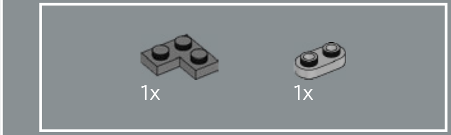

204

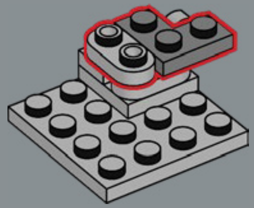

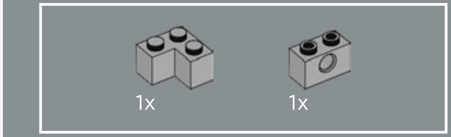

205

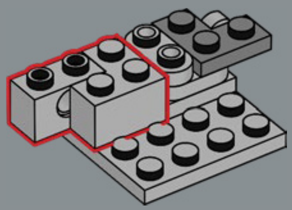

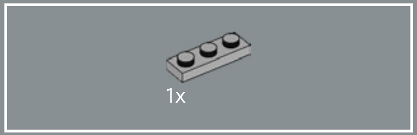

206

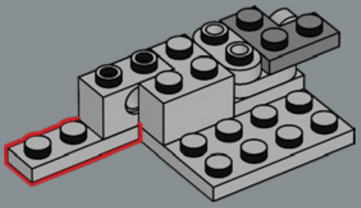

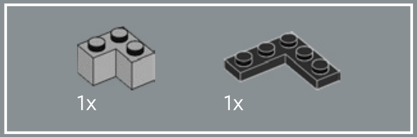

207

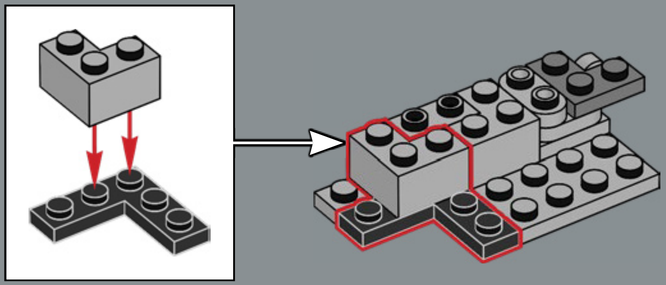

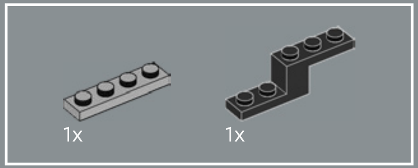

208

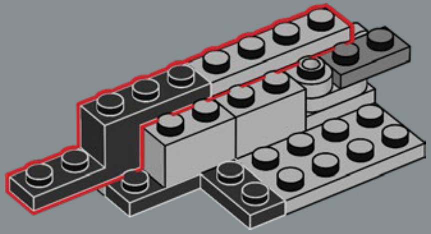

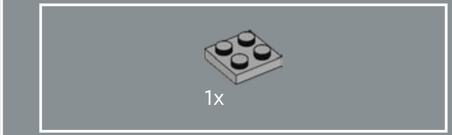

209

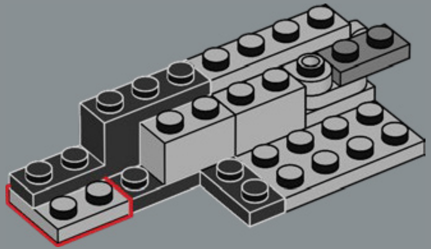

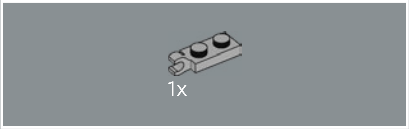

210

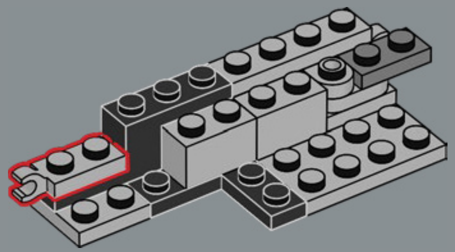

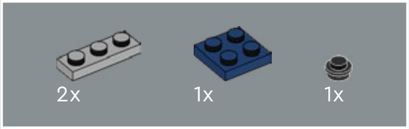

211

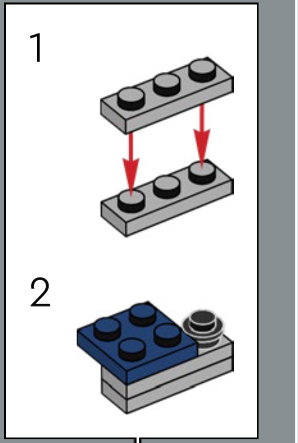

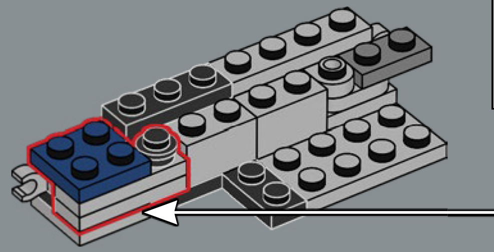

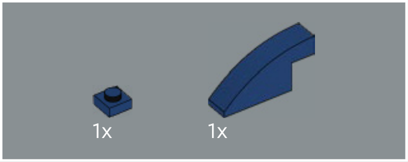

212

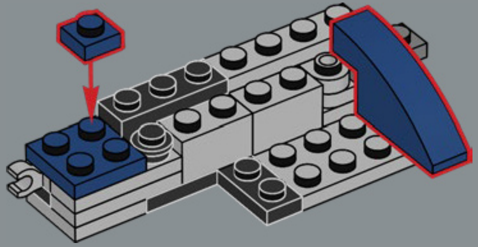

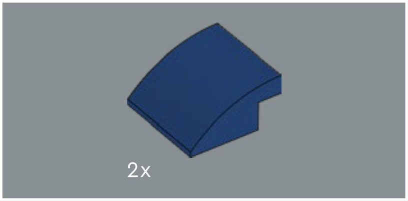

213

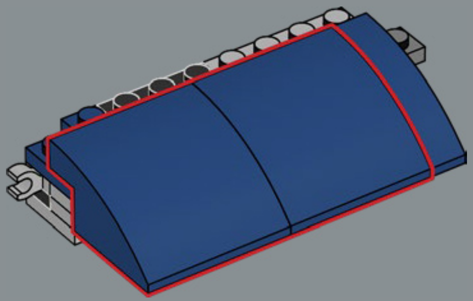

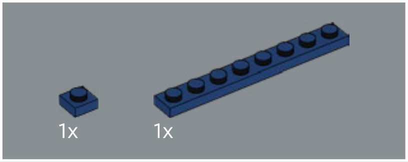

214

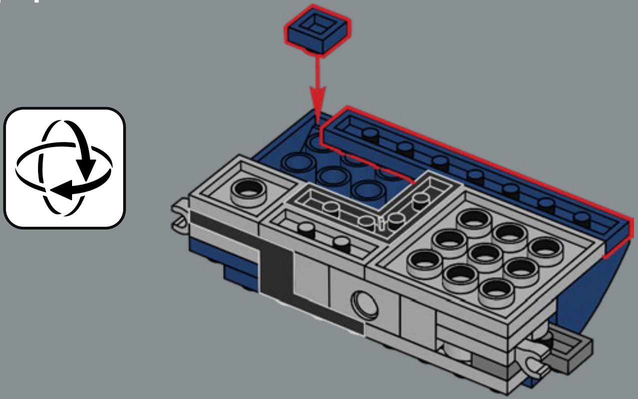

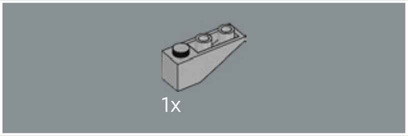

215

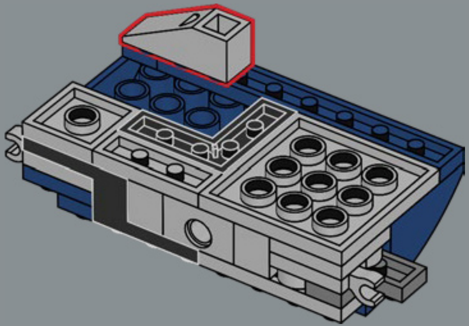

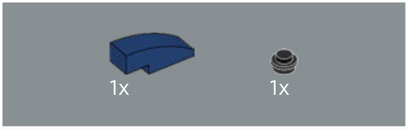

216

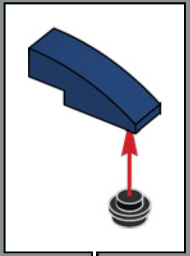

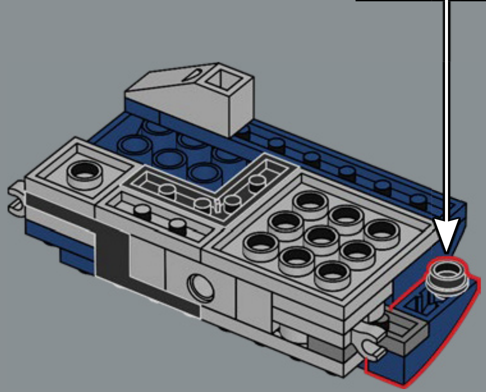

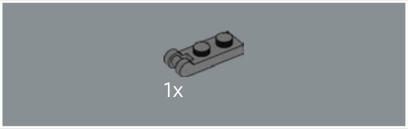

217

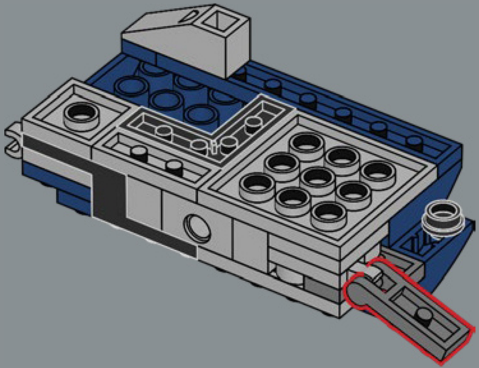

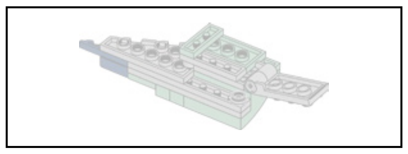

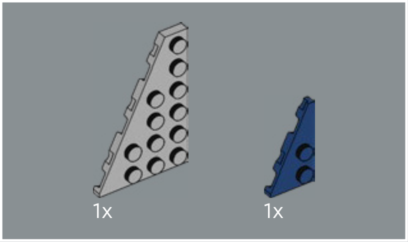

218

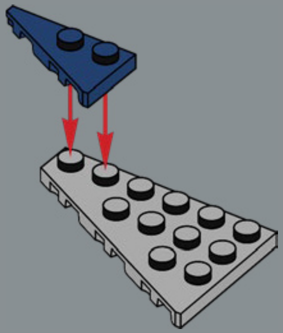

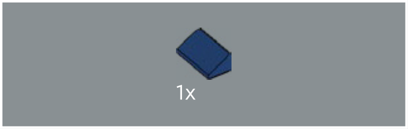

219

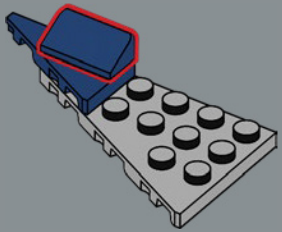

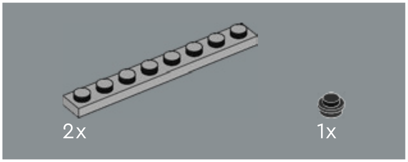

220

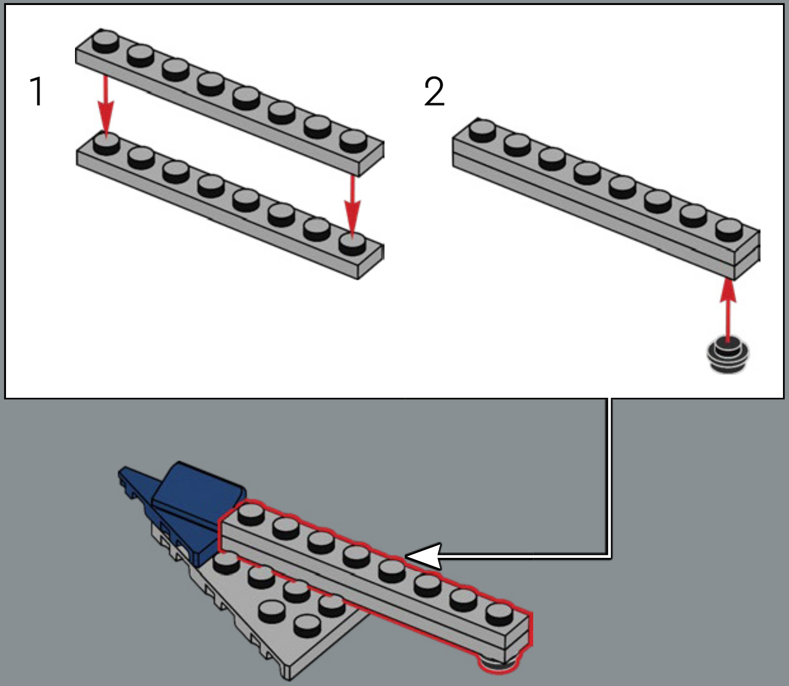

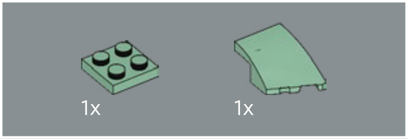

221

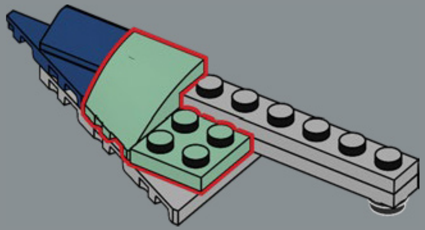

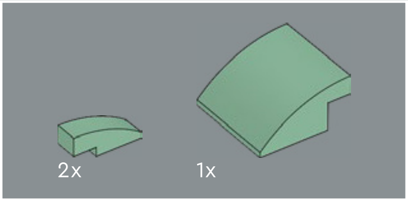

222

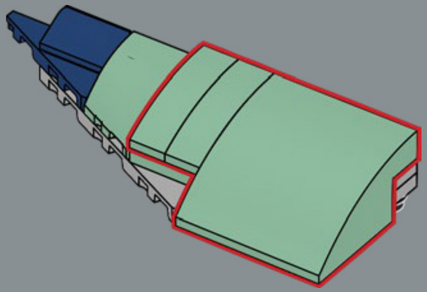

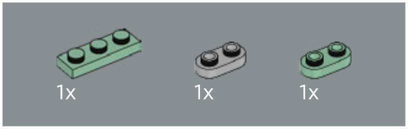

223

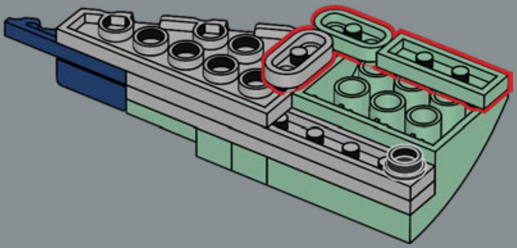

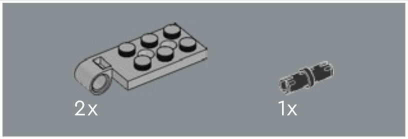

224

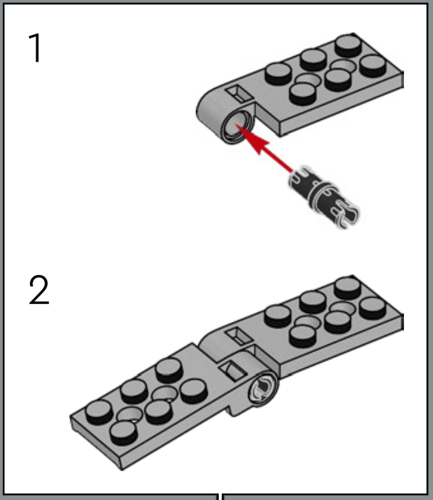

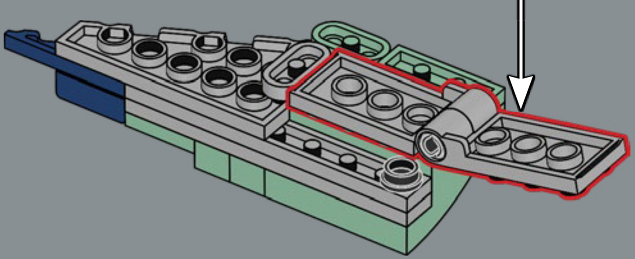

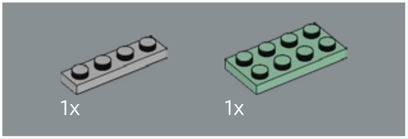

225

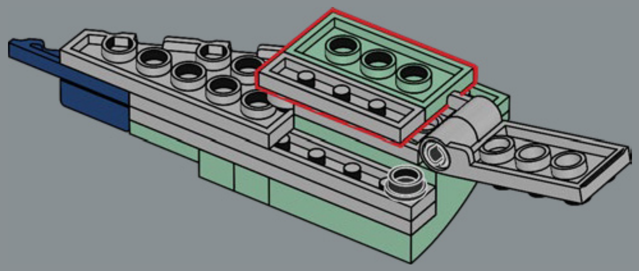

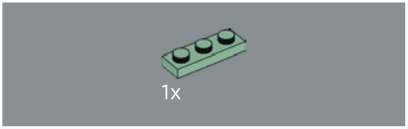

226

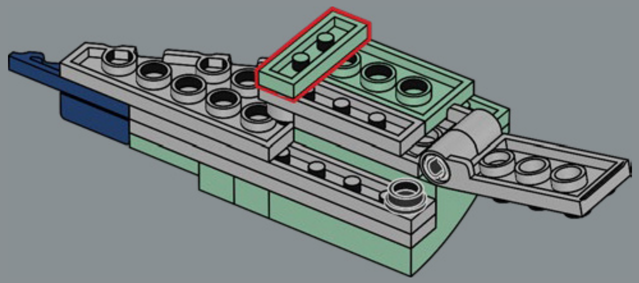

227

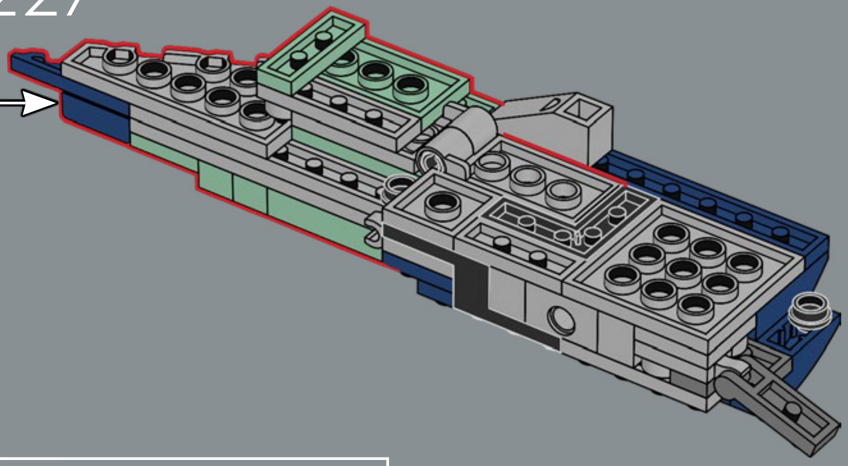

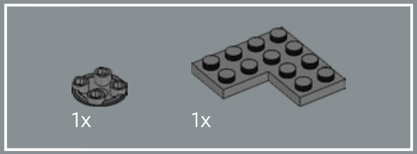

228

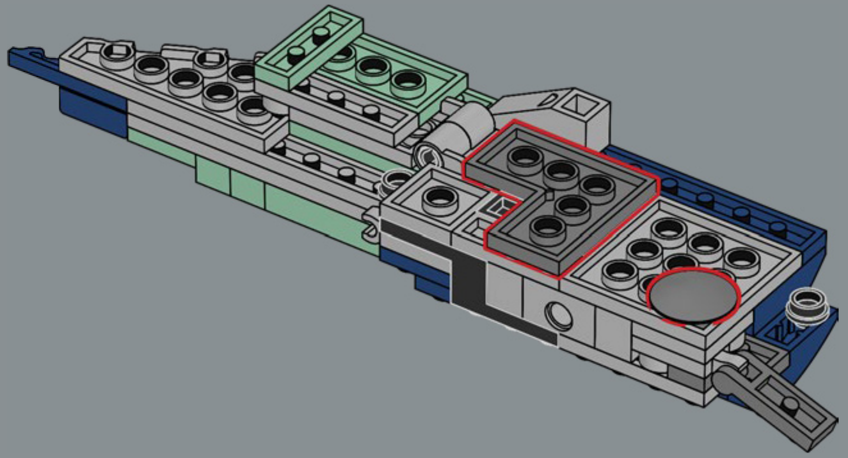

229

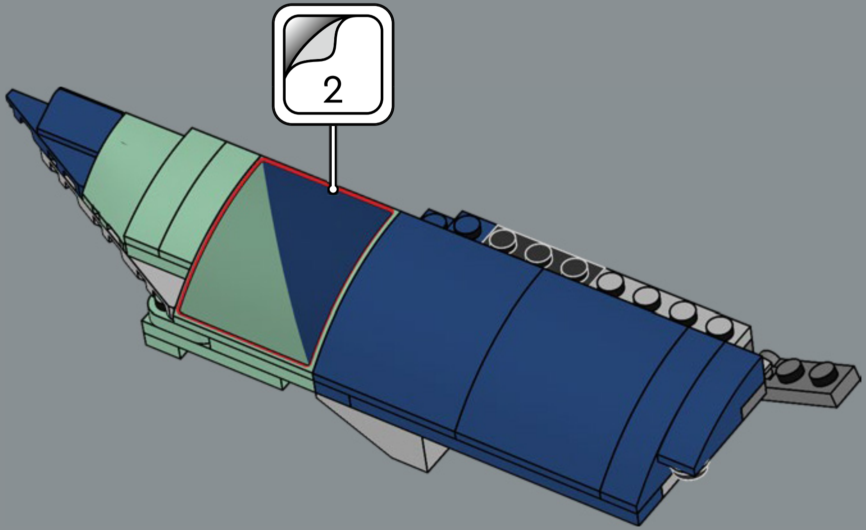

230

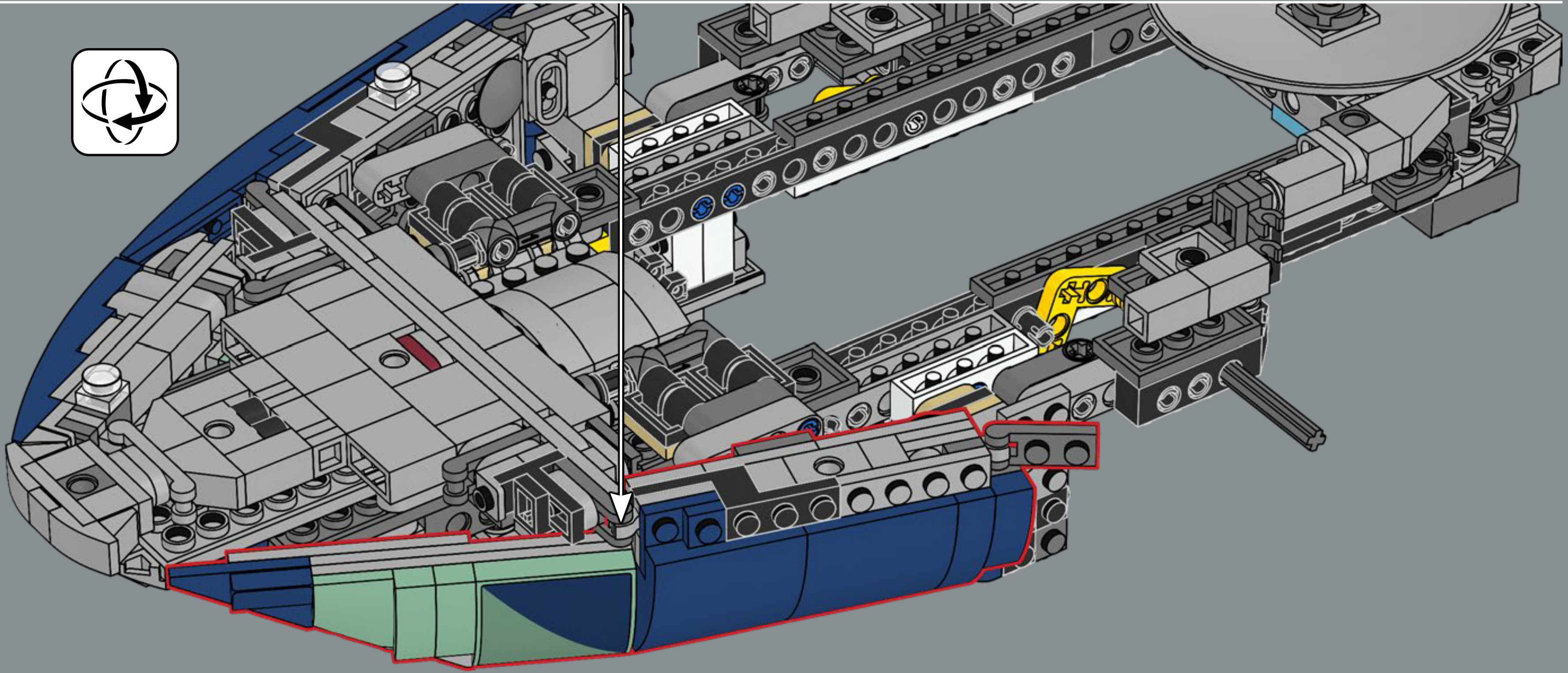

231

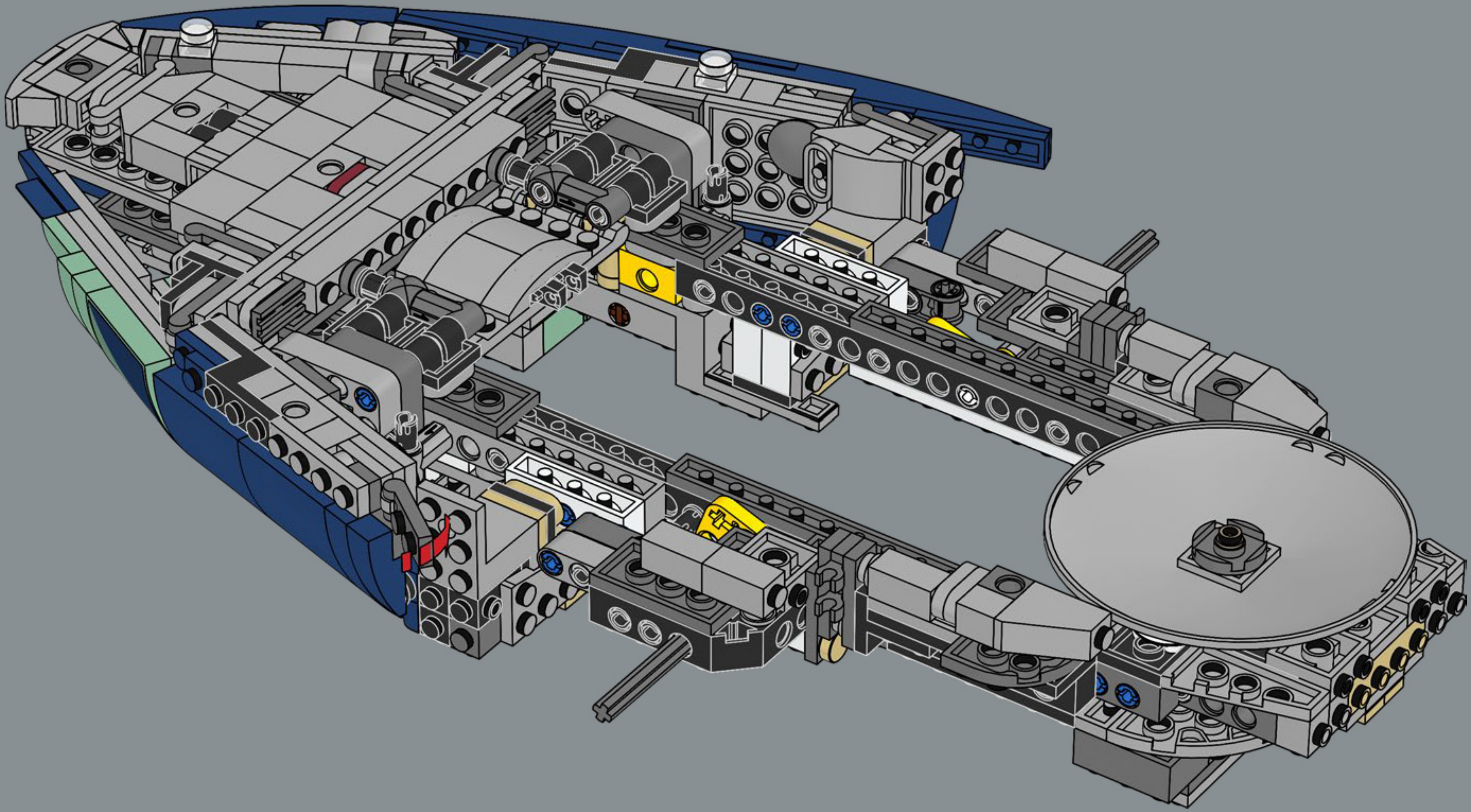

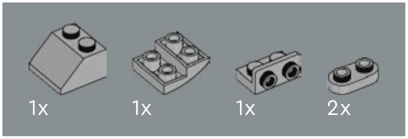

232

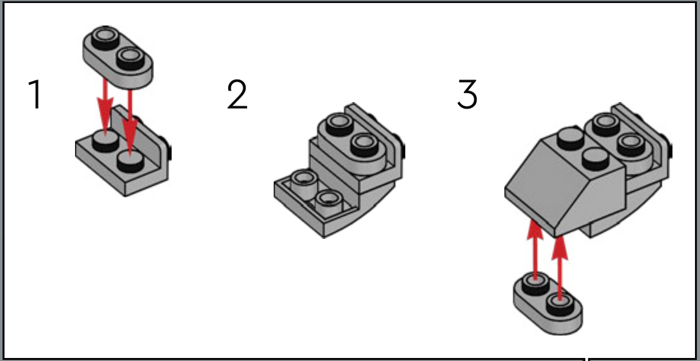

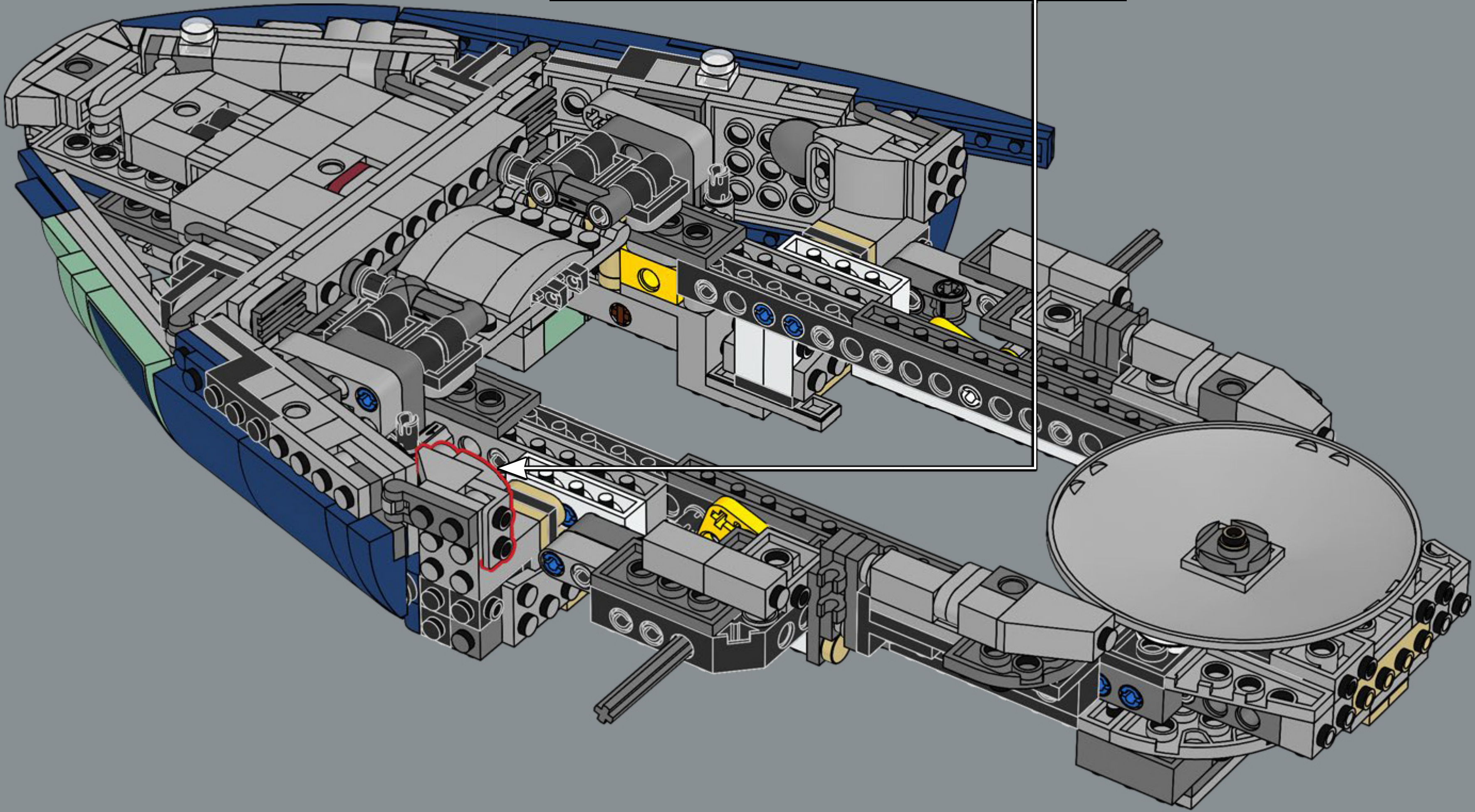

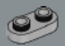

1x

233

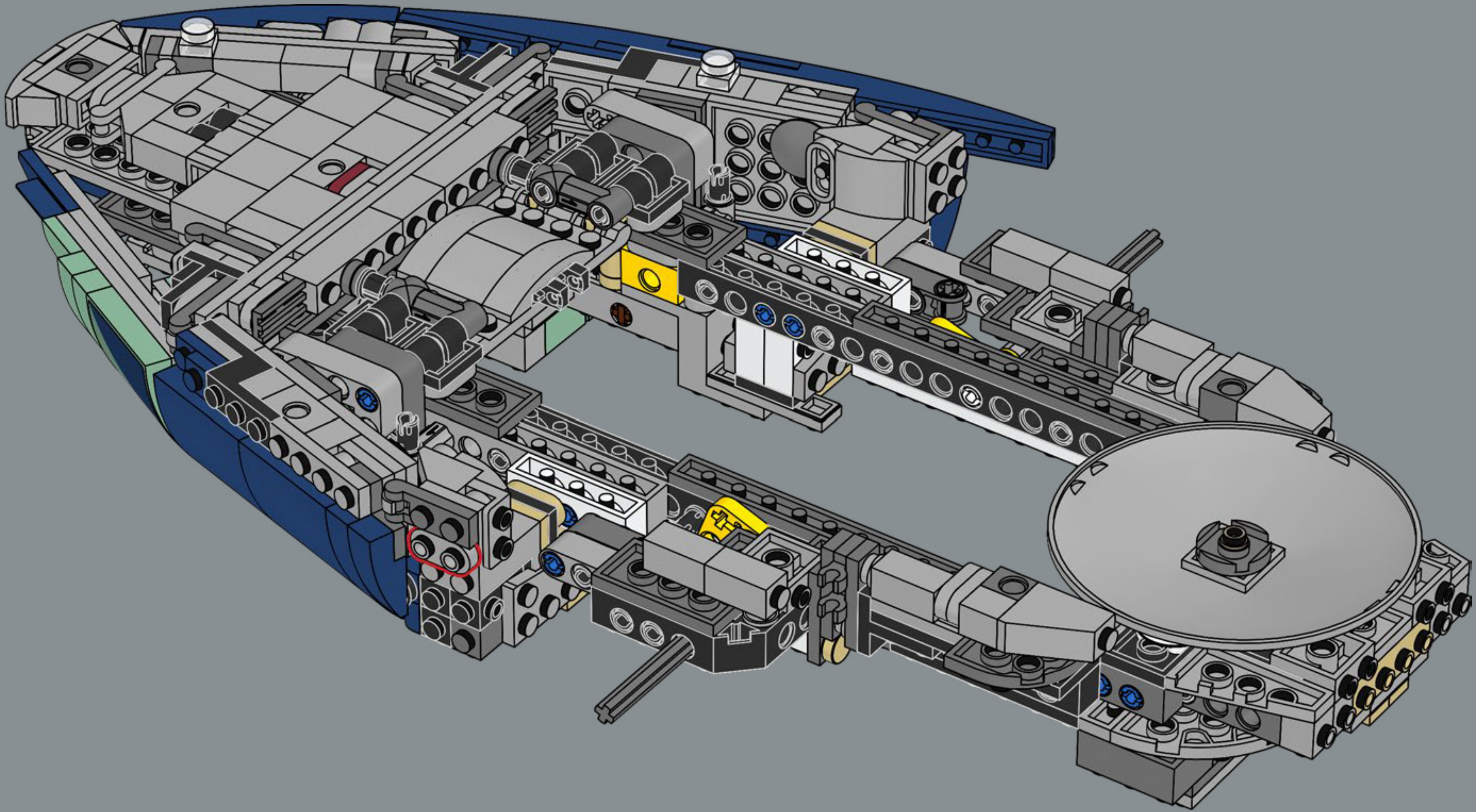

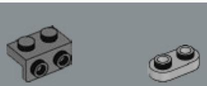

234

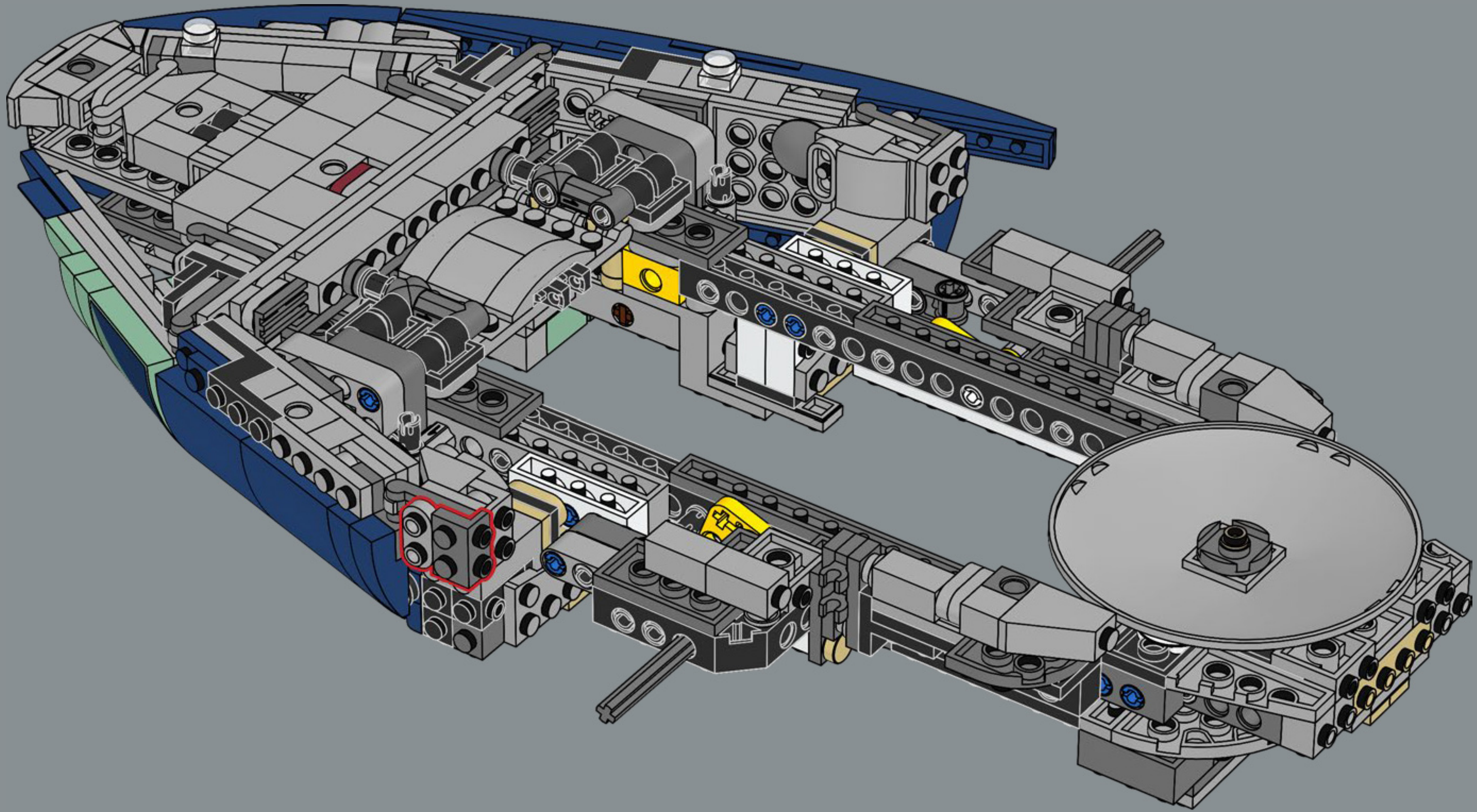

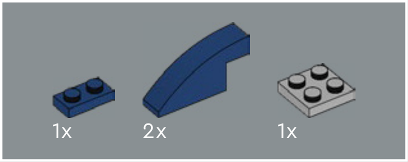

235

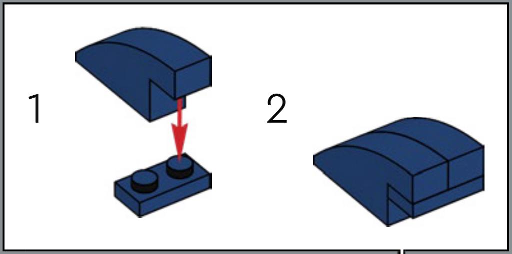

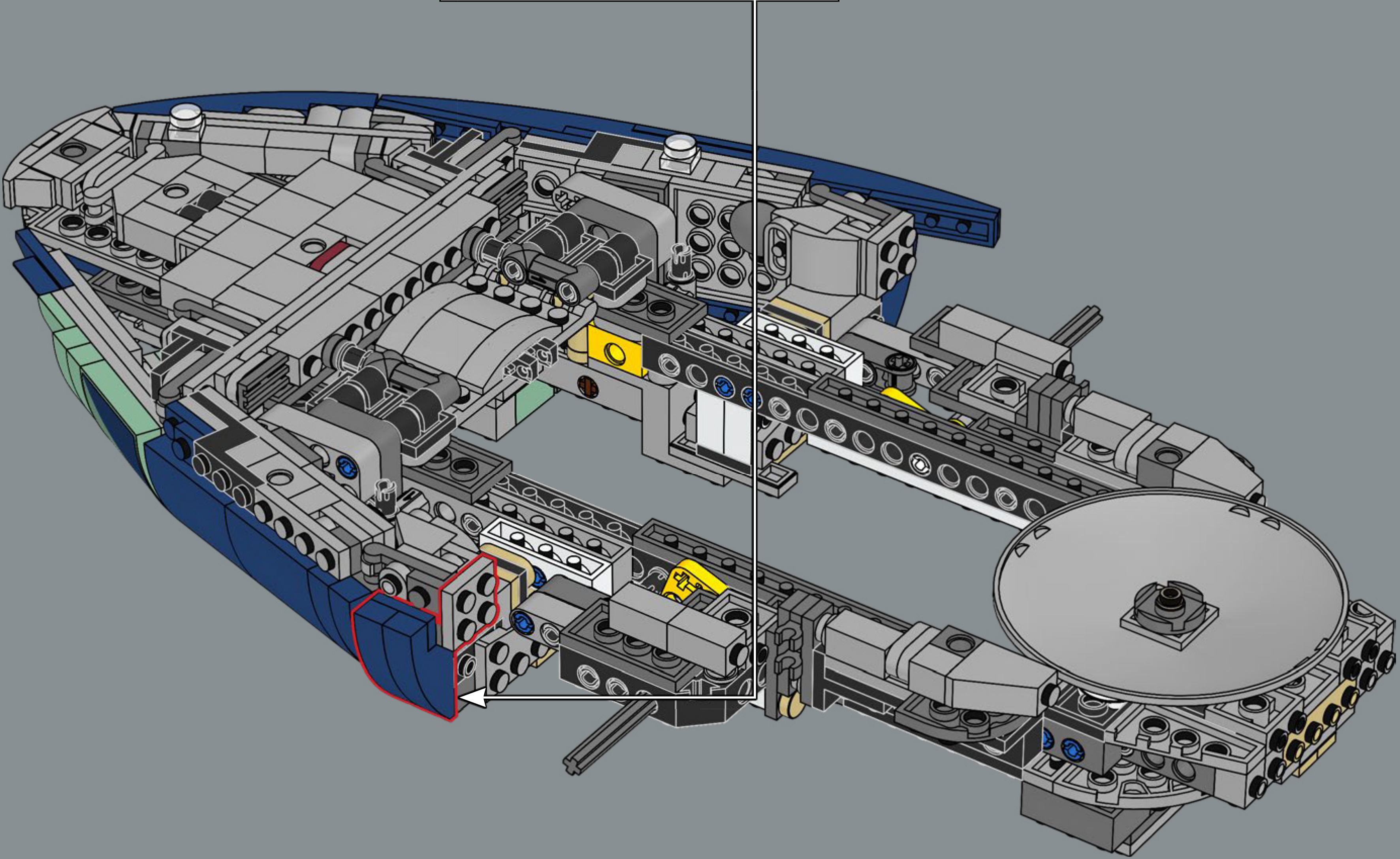

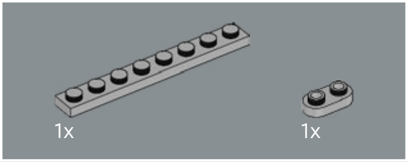

236

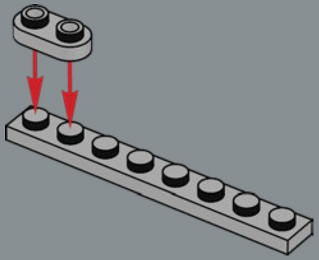

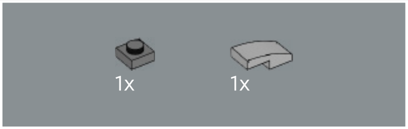

237

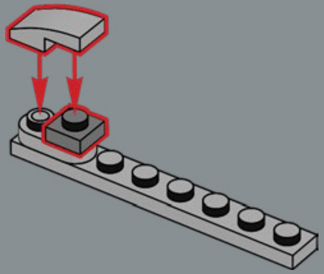

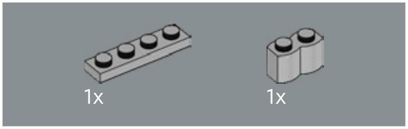

238

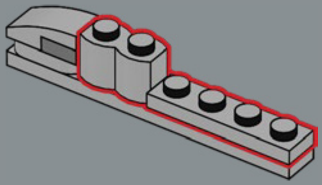

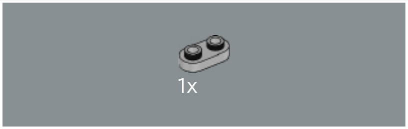

239

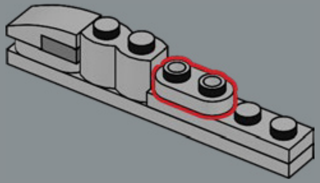

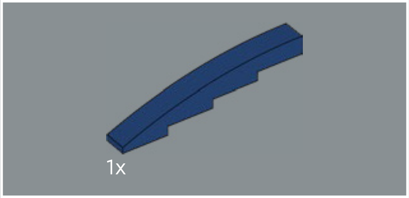

240

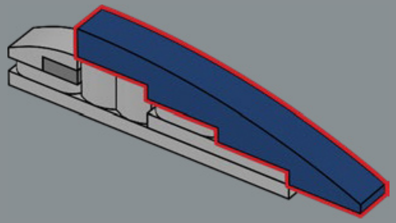

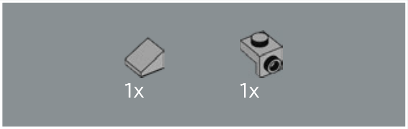

241

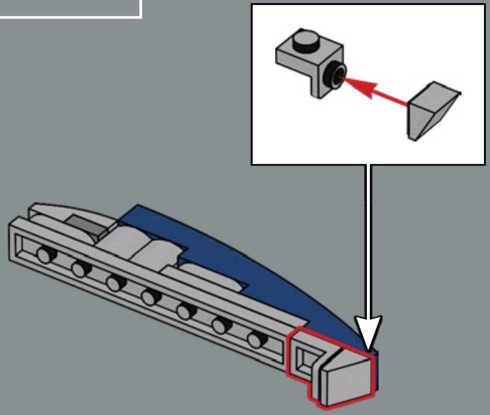

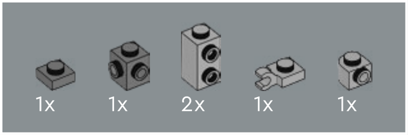
1x
1x
2x
1x
1x

242

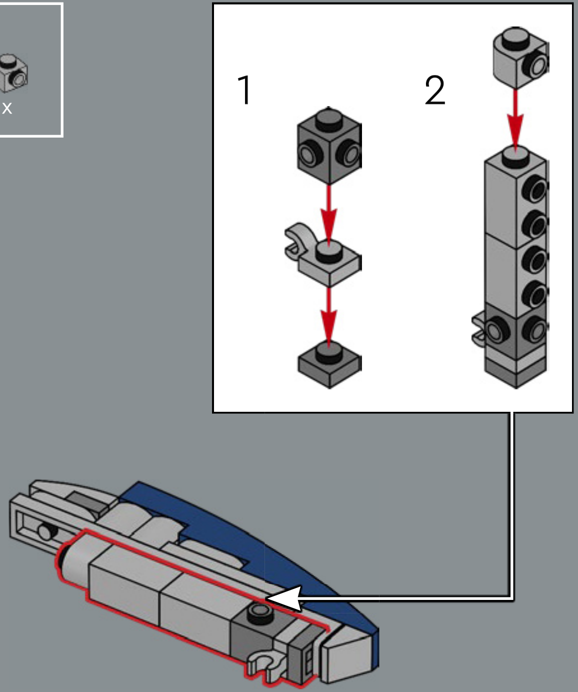

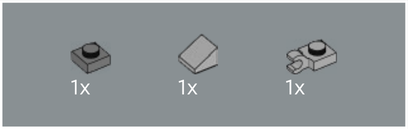

243

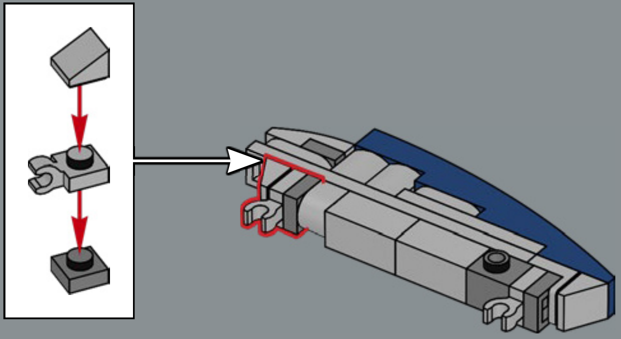

244

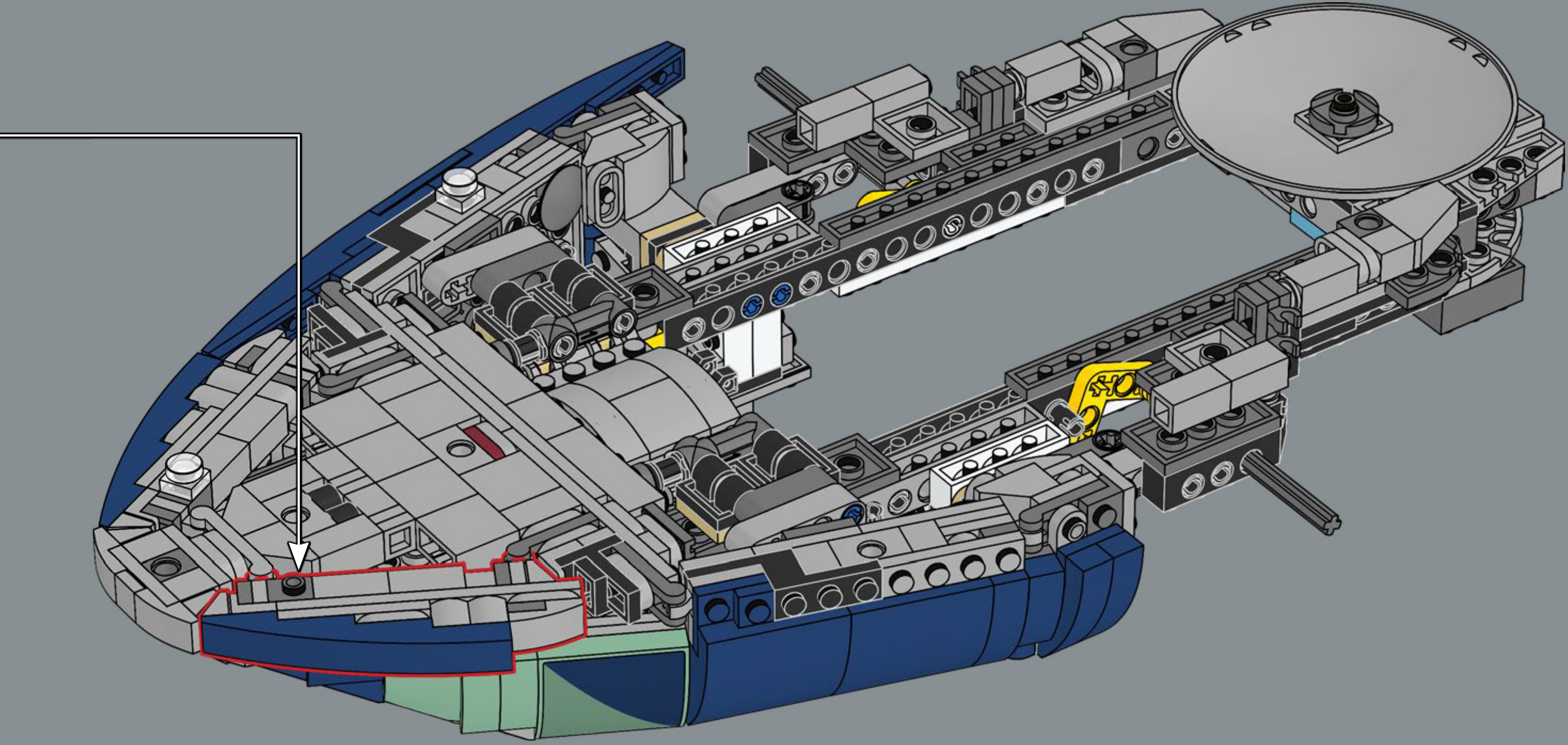

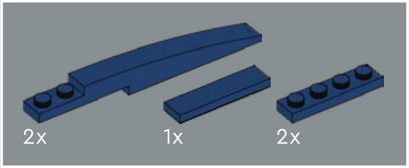

245

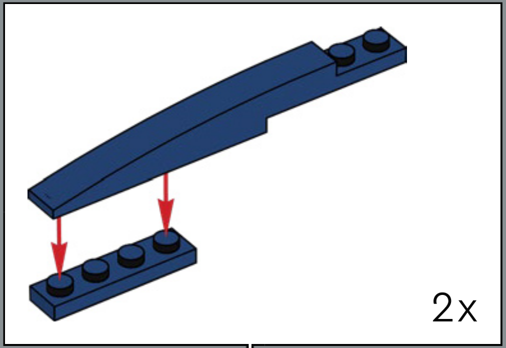

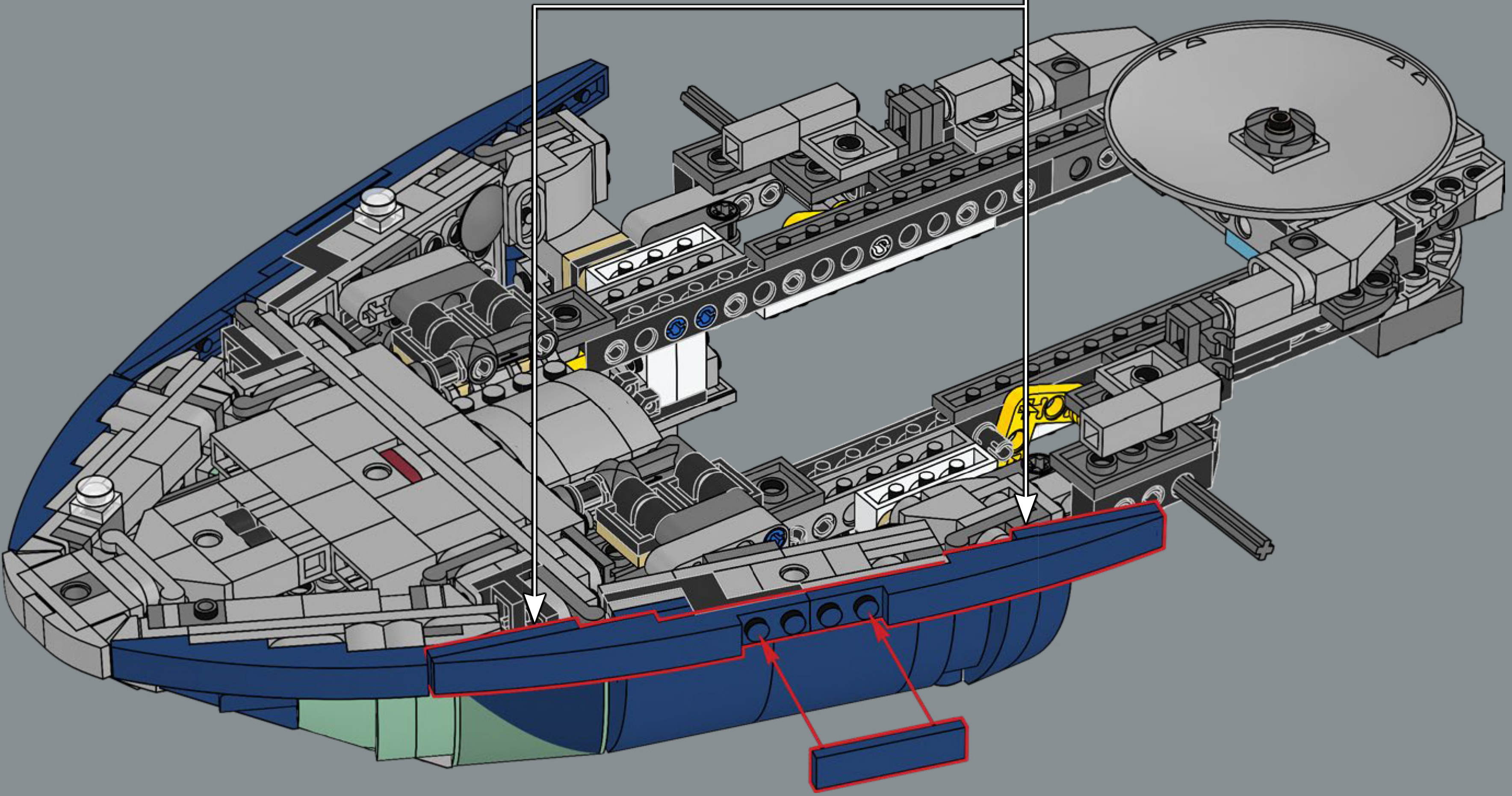

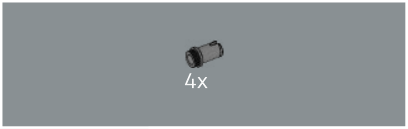

246

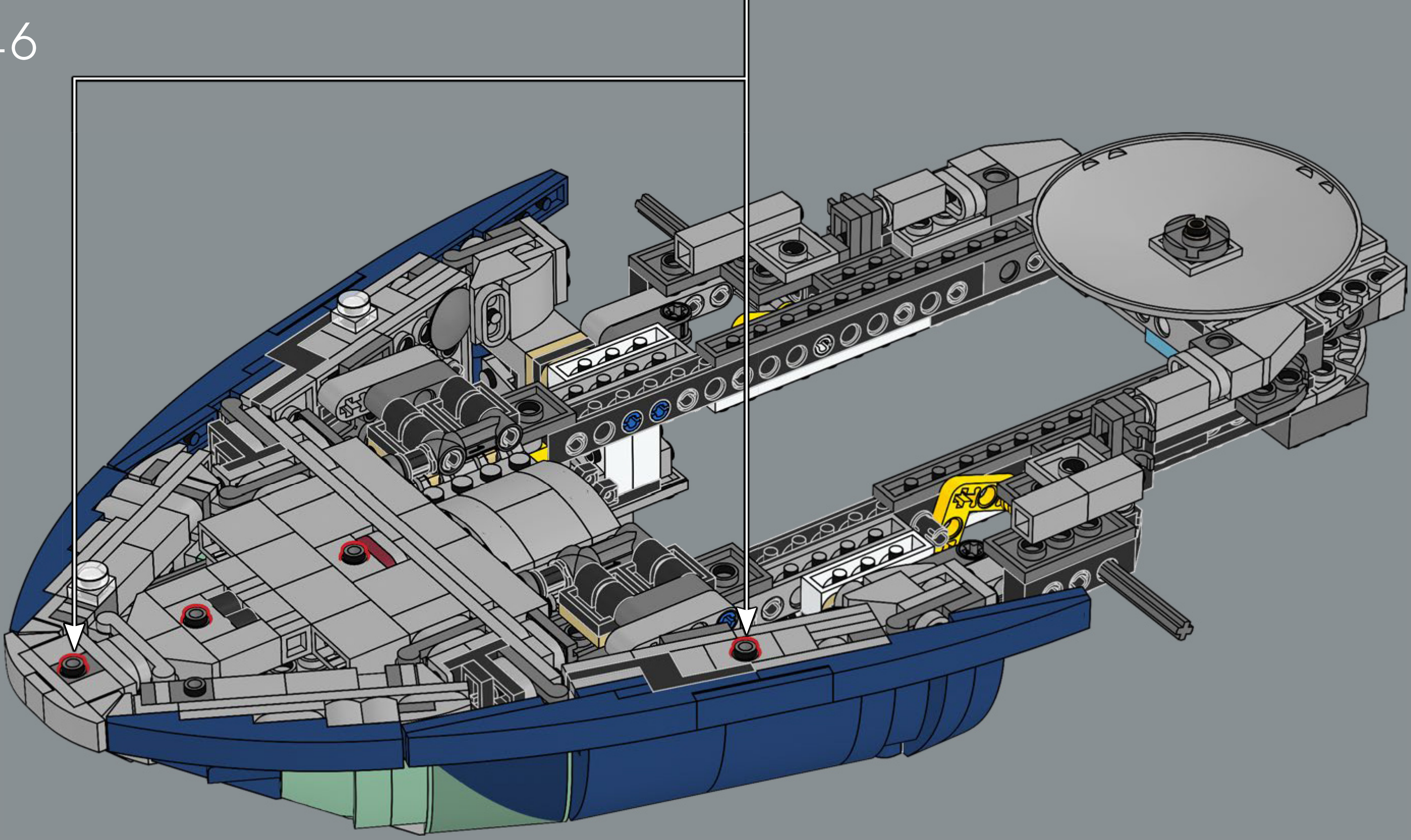

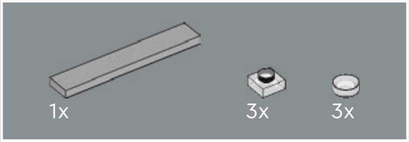

247

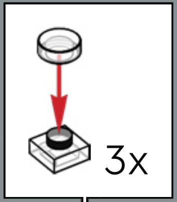

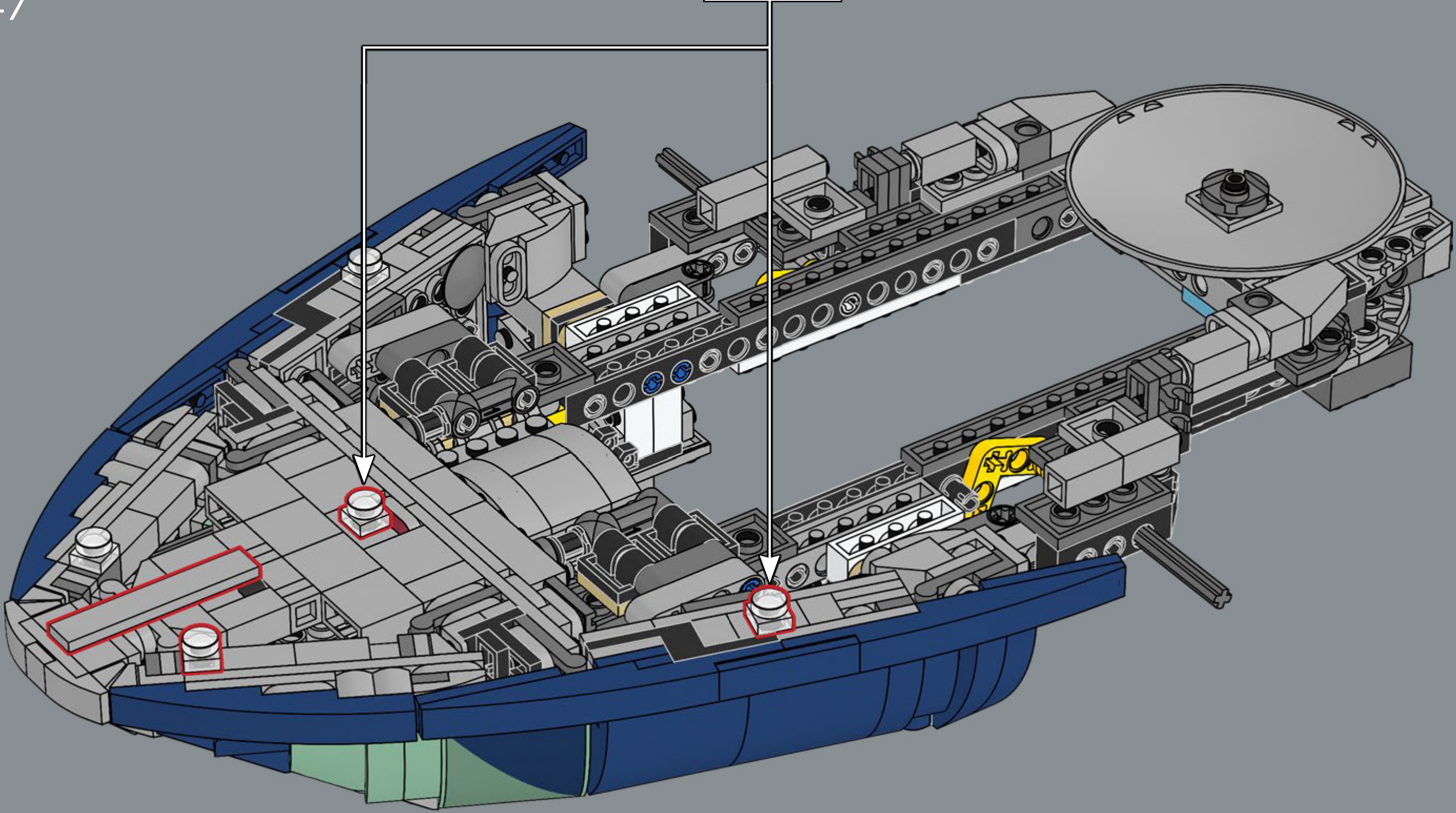

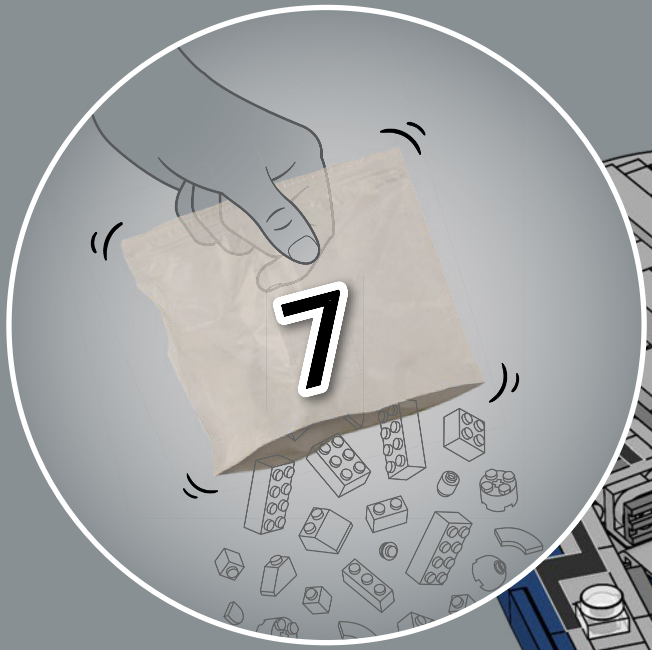

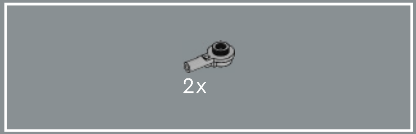

248

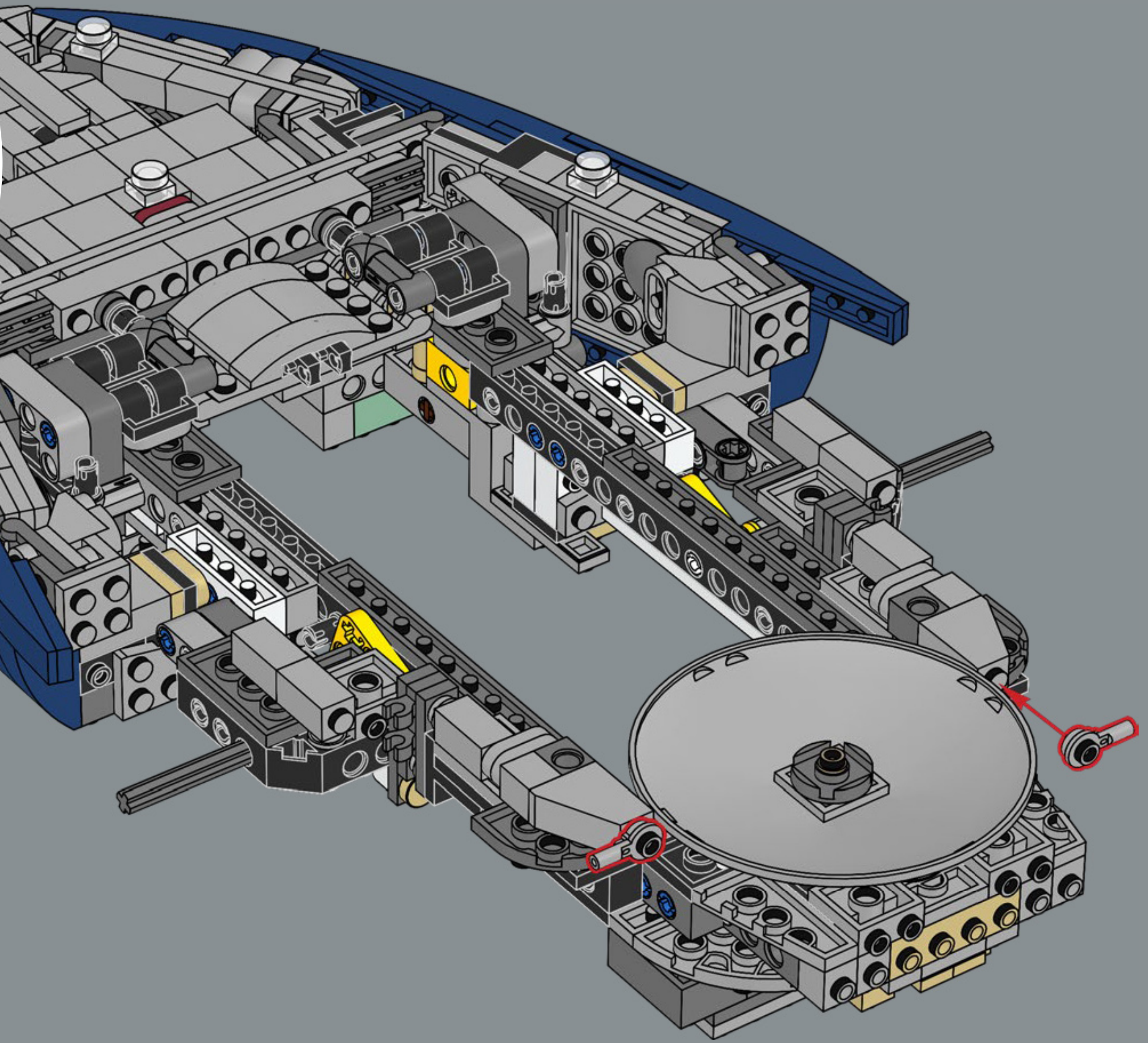

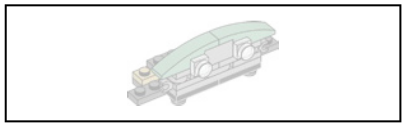

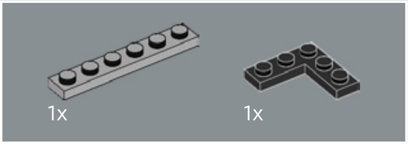

249

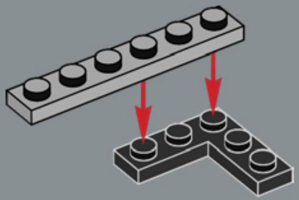

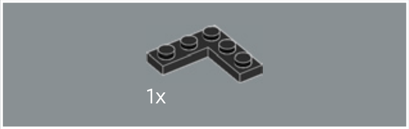

250

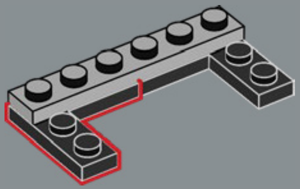

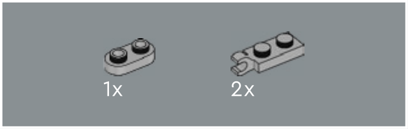

251

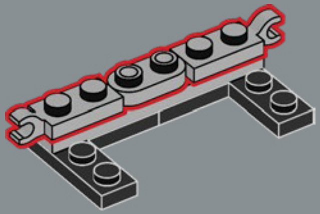

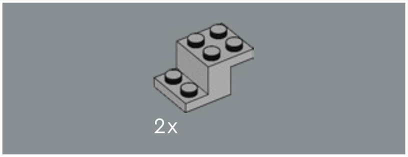

252

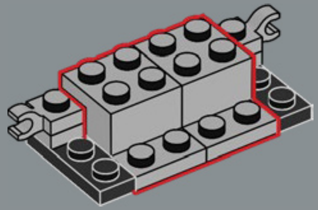

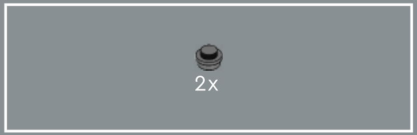

253

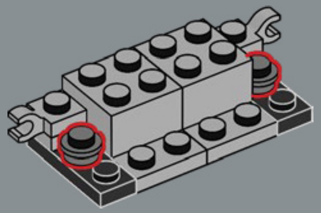

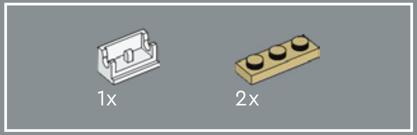

254

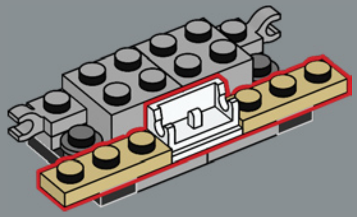

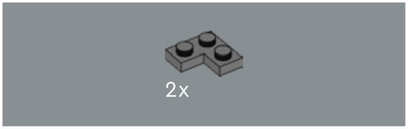

255

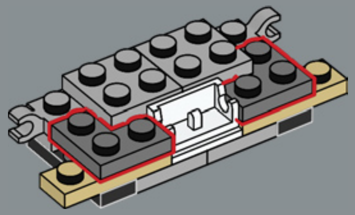

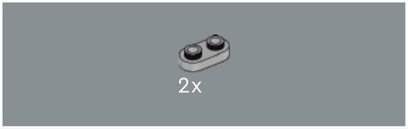

256

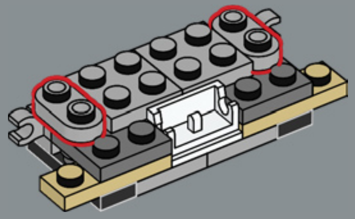

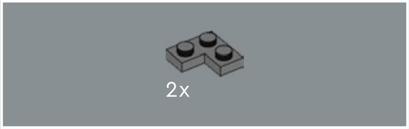

257

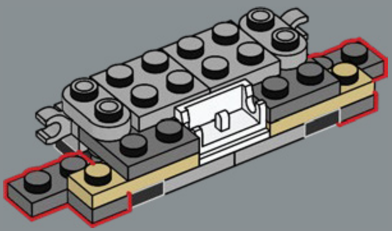

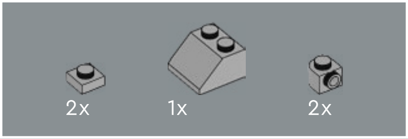

258

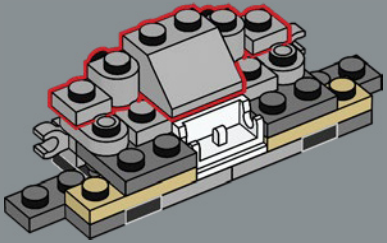

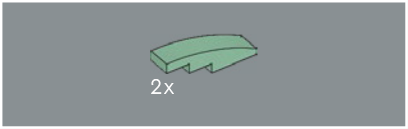

259

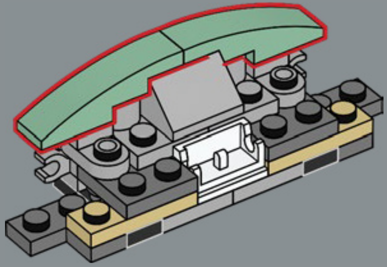

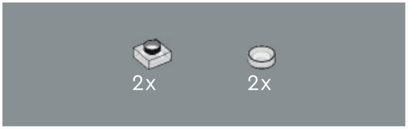

260

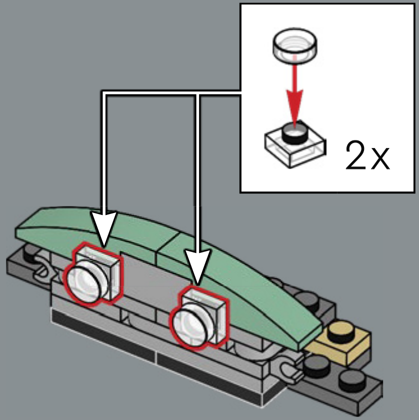

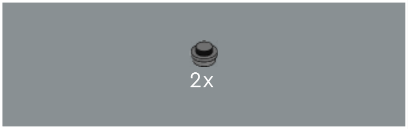

261

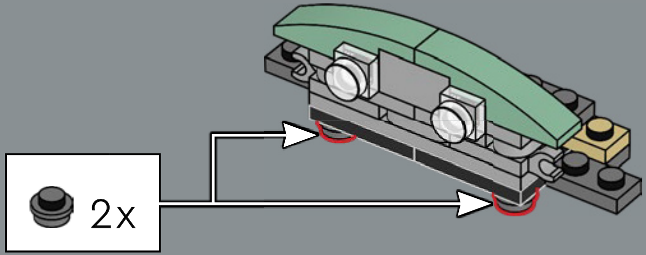

262

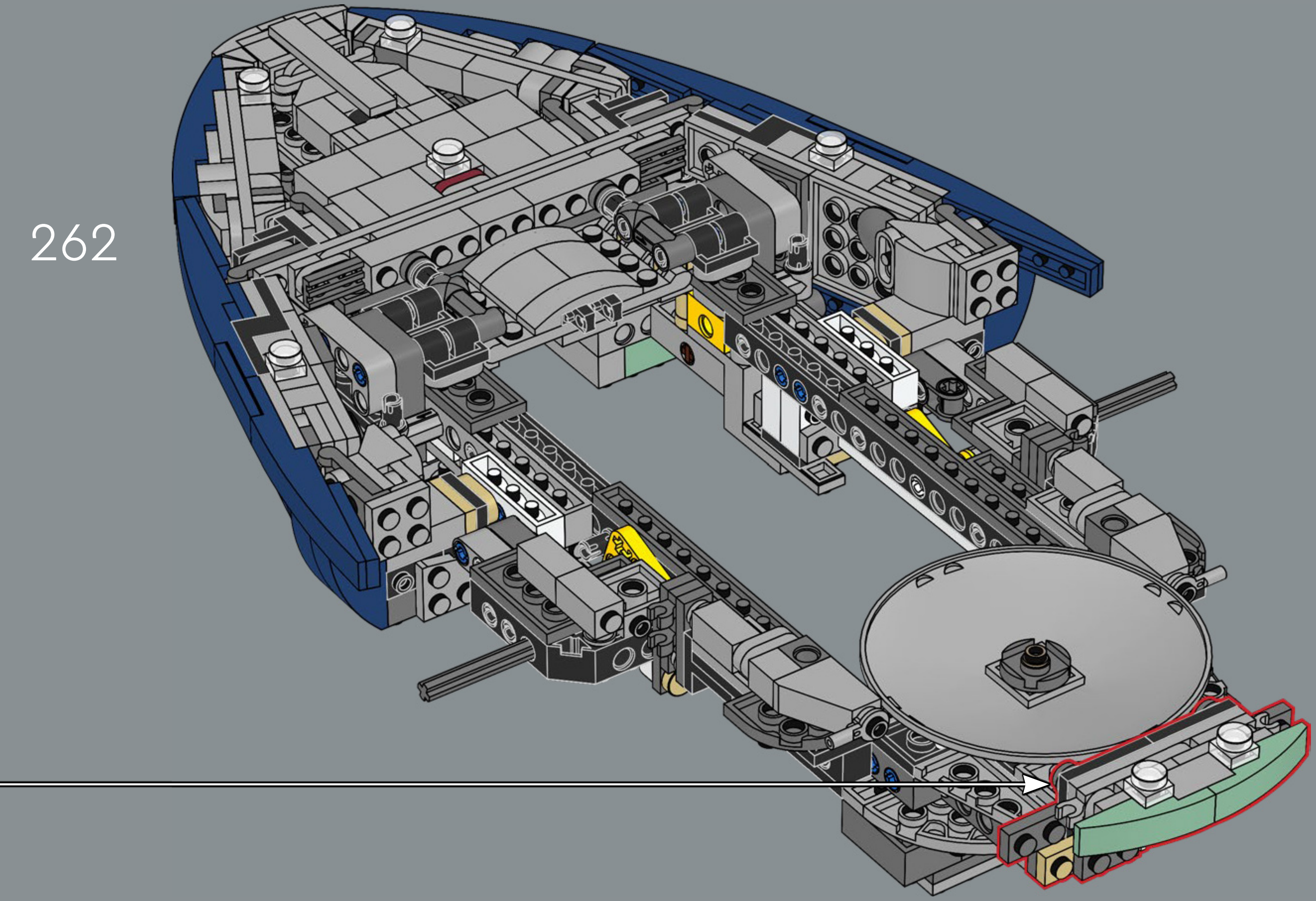

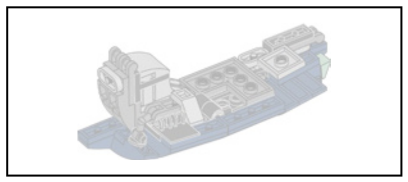

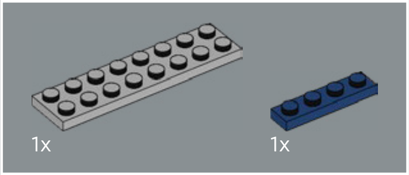

263

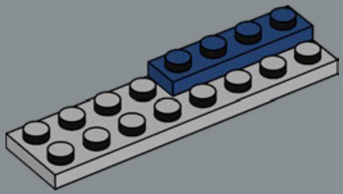

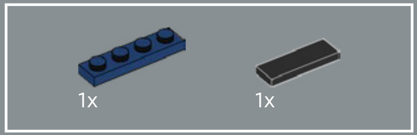

264

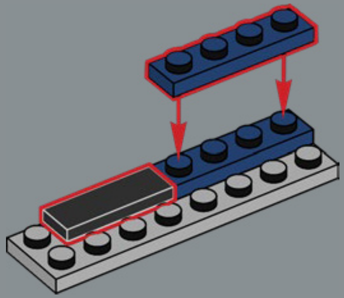

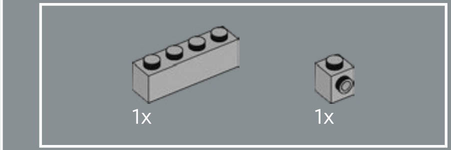

265

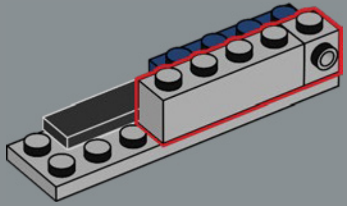

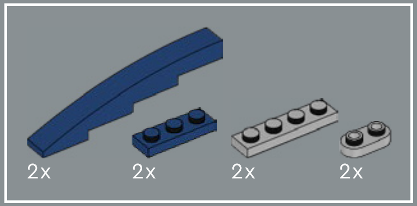

266

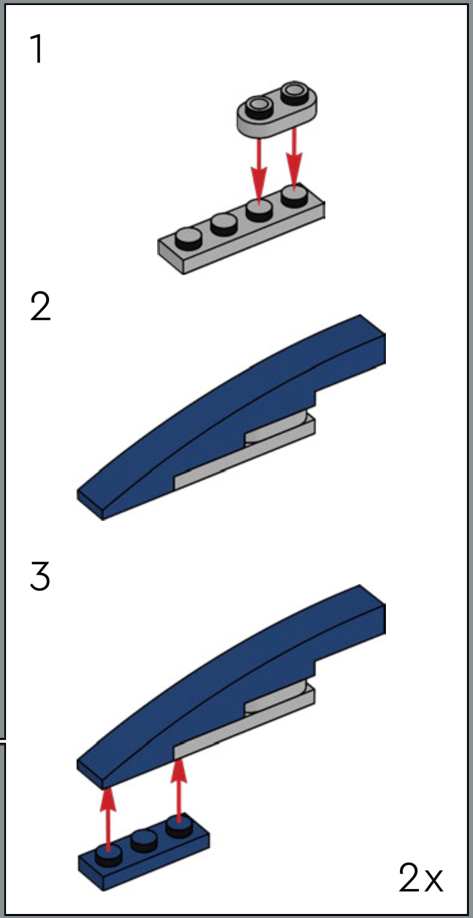

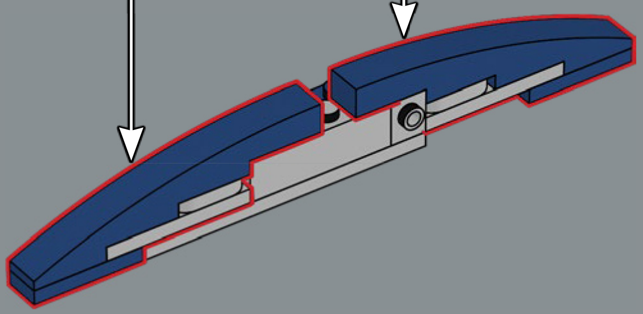

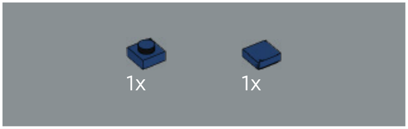

267

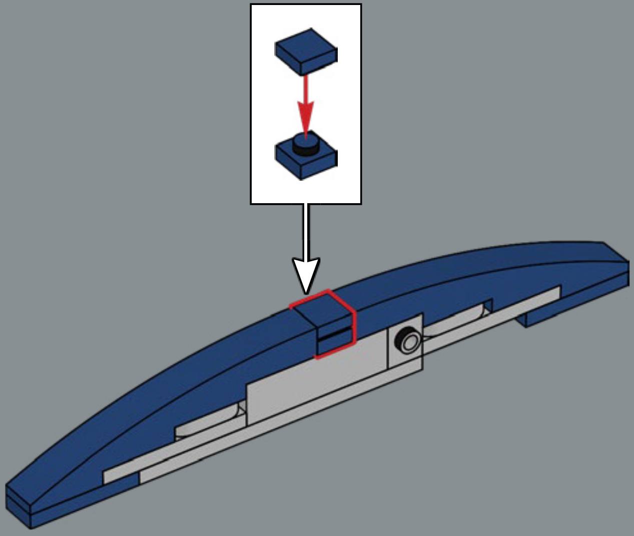

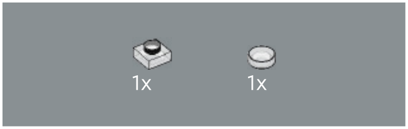

268

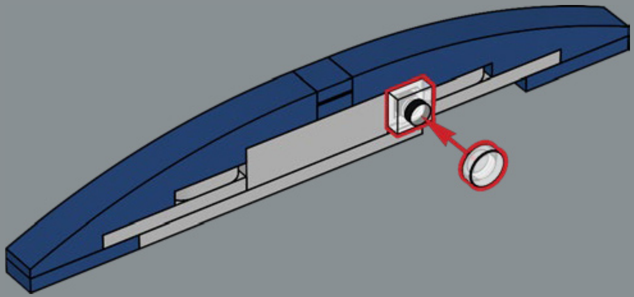

269

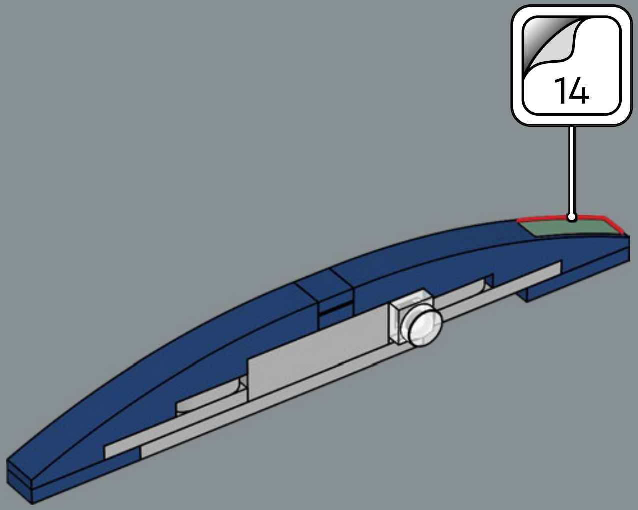

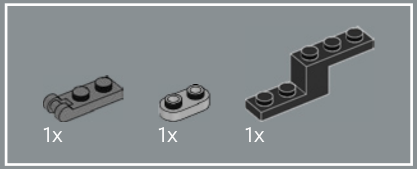

270

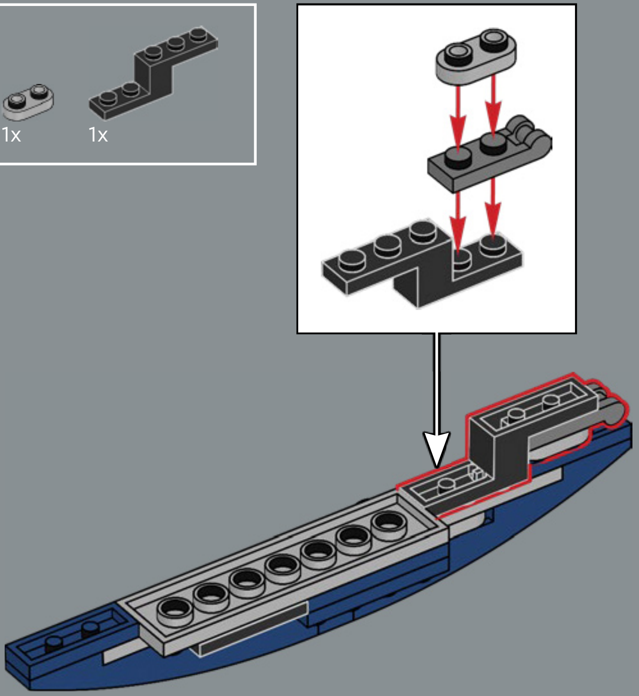

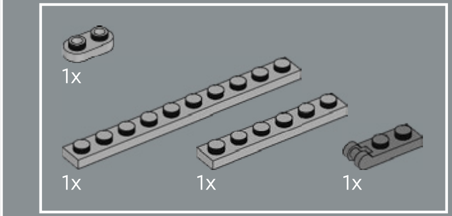

271

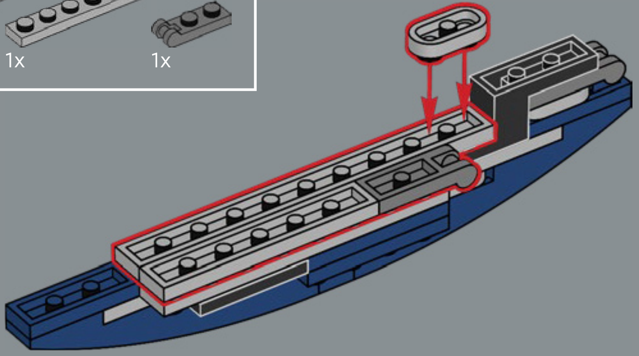

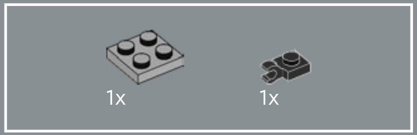

272

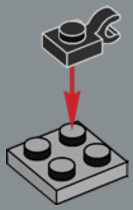

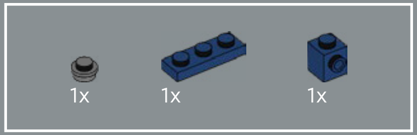

273

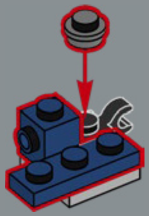

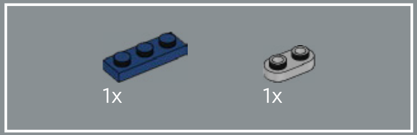

274

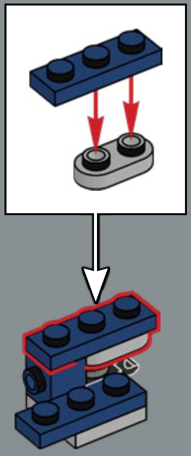

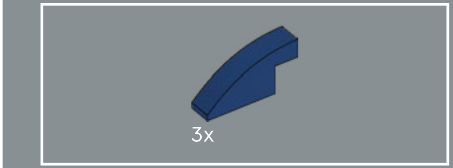

275

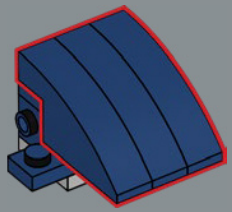

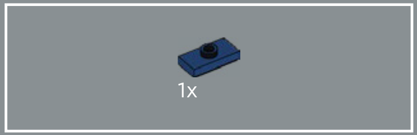

276

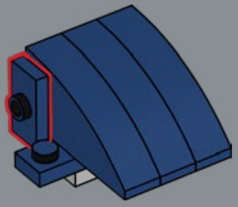

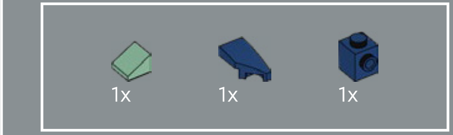

277

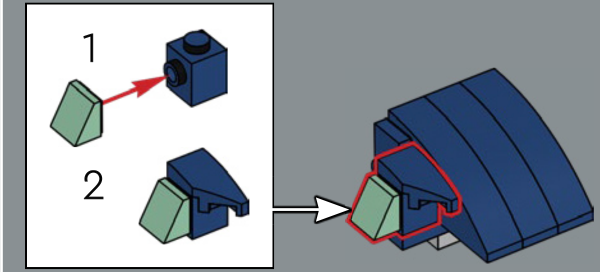

278

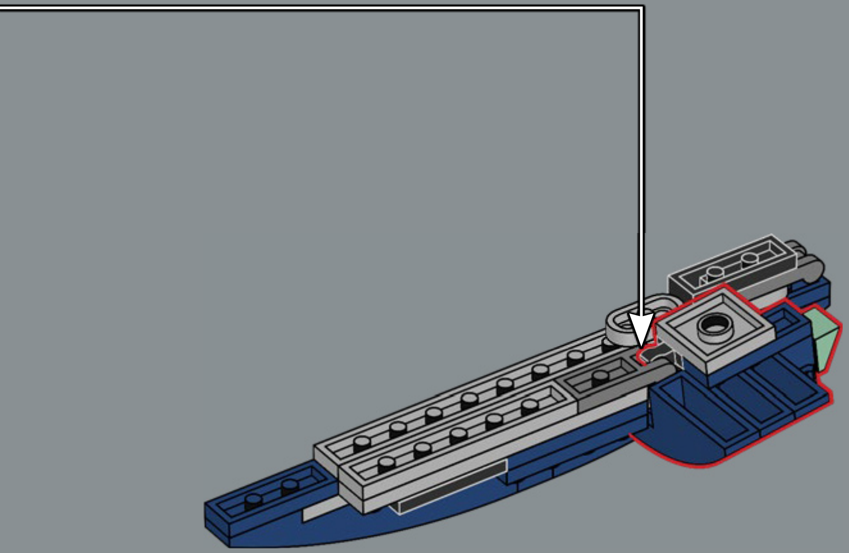

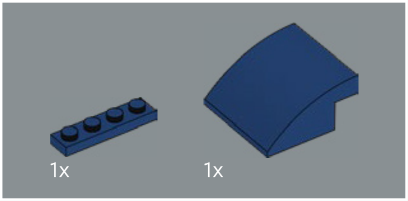

279

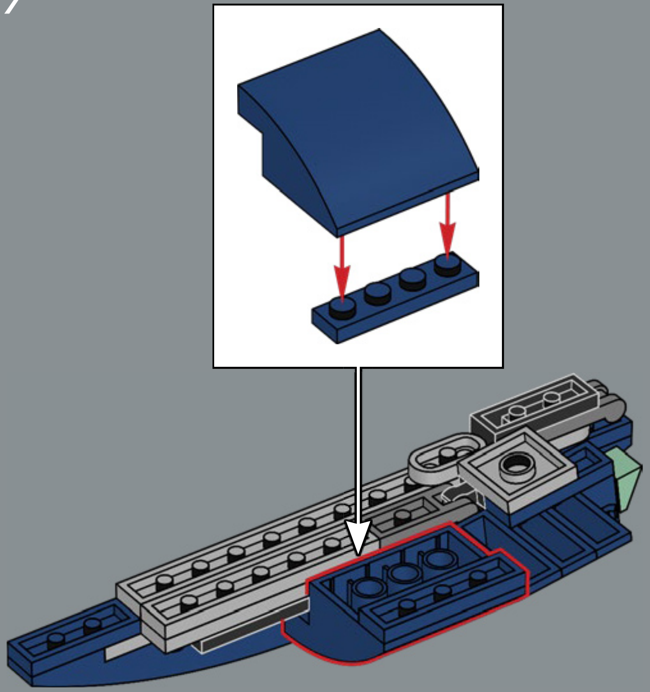

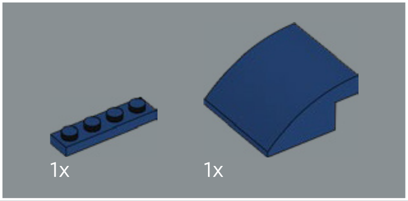

280

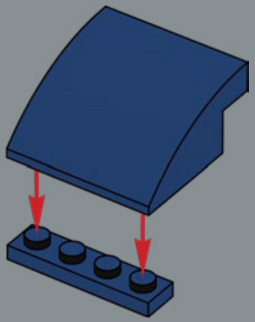

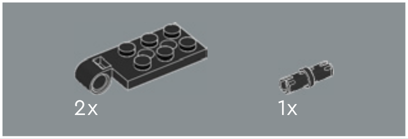

281

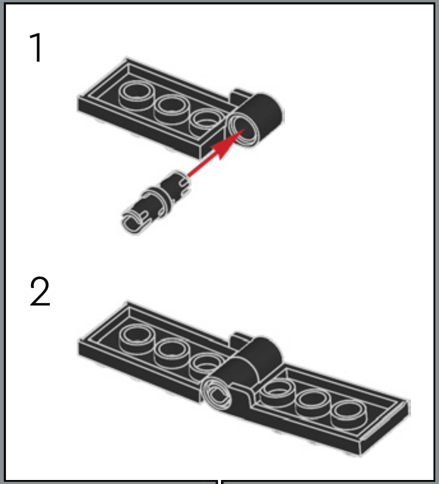

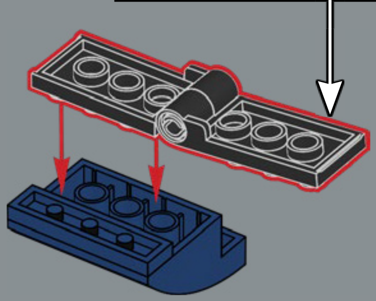

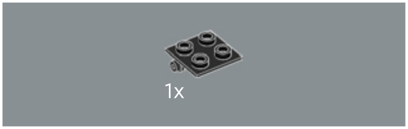

282

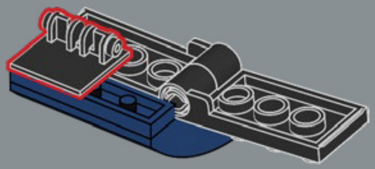

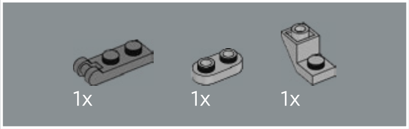

283

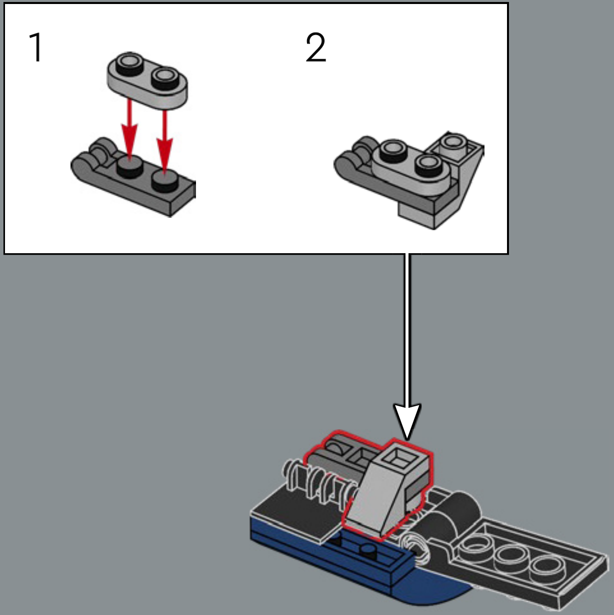

284

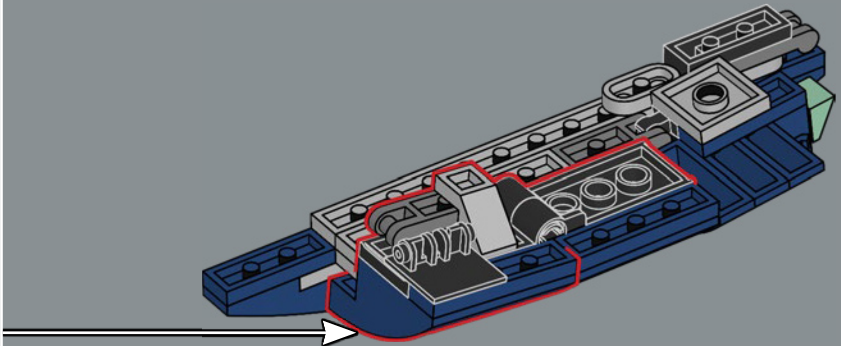

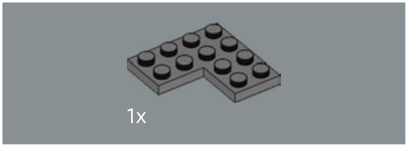

285

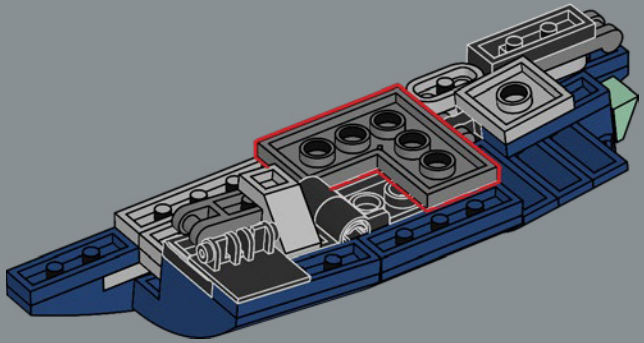

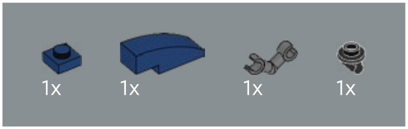

286

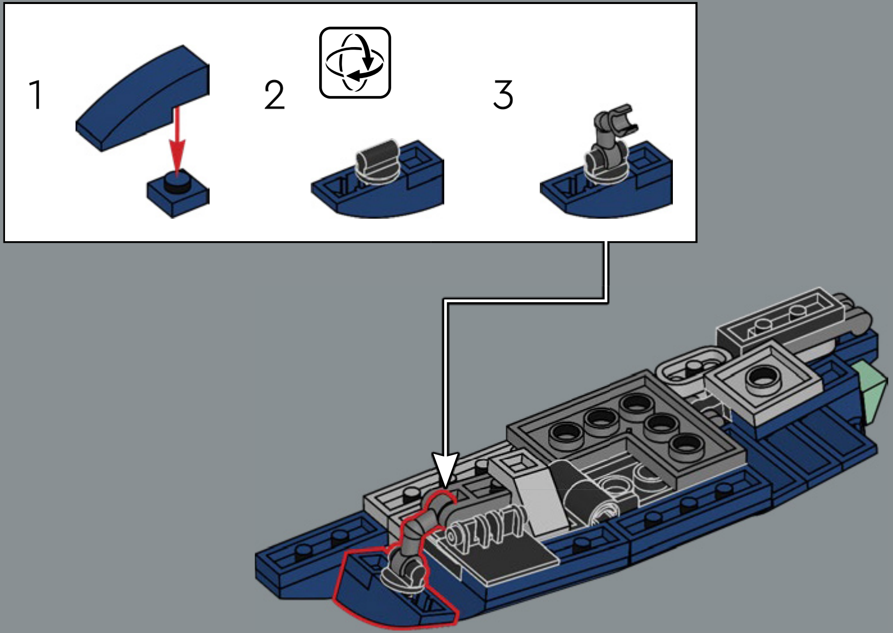

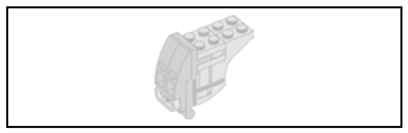

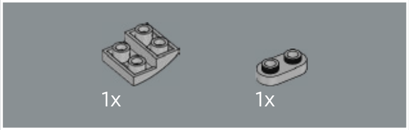

287

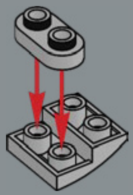

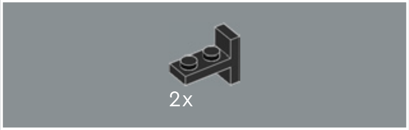

288

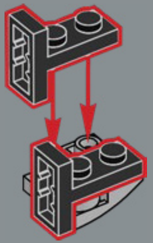

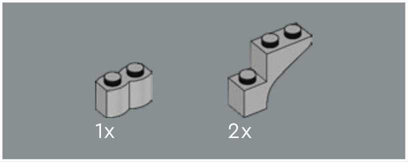

289

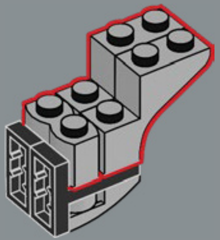

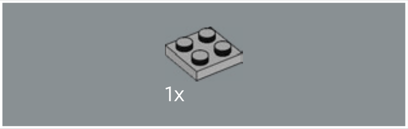

290

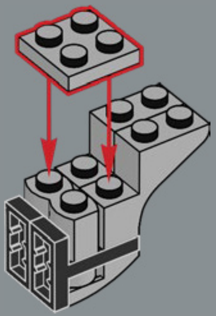

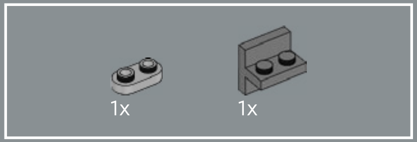

291

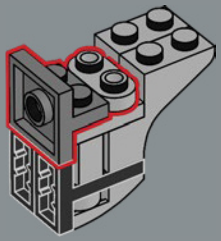

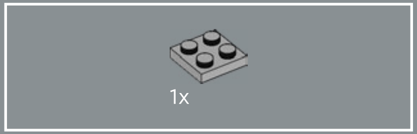

292

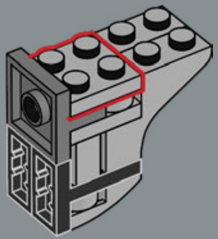

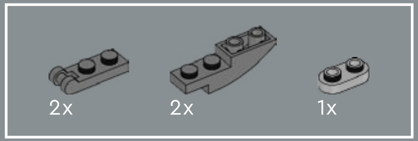

293

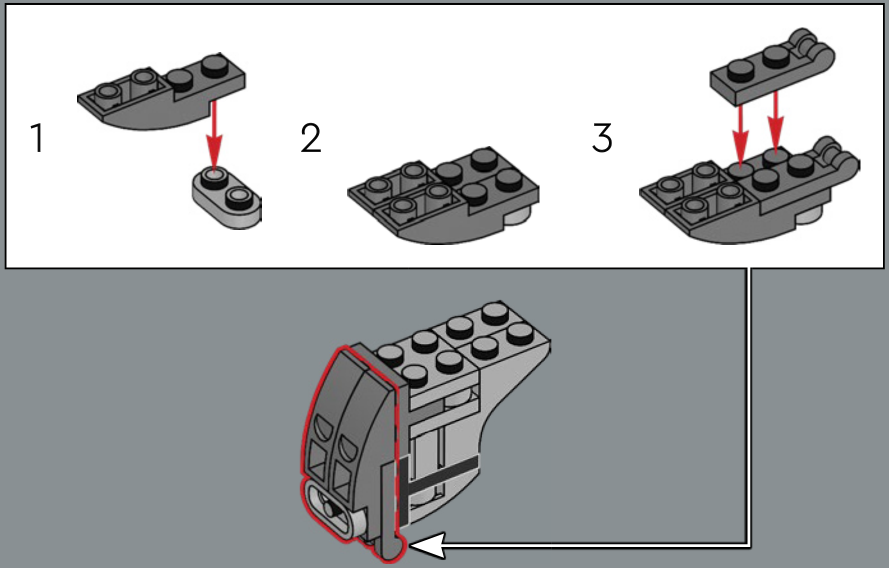

294

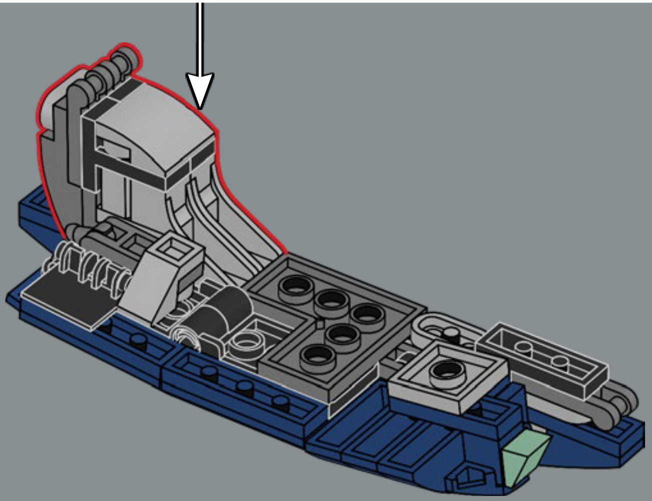

295

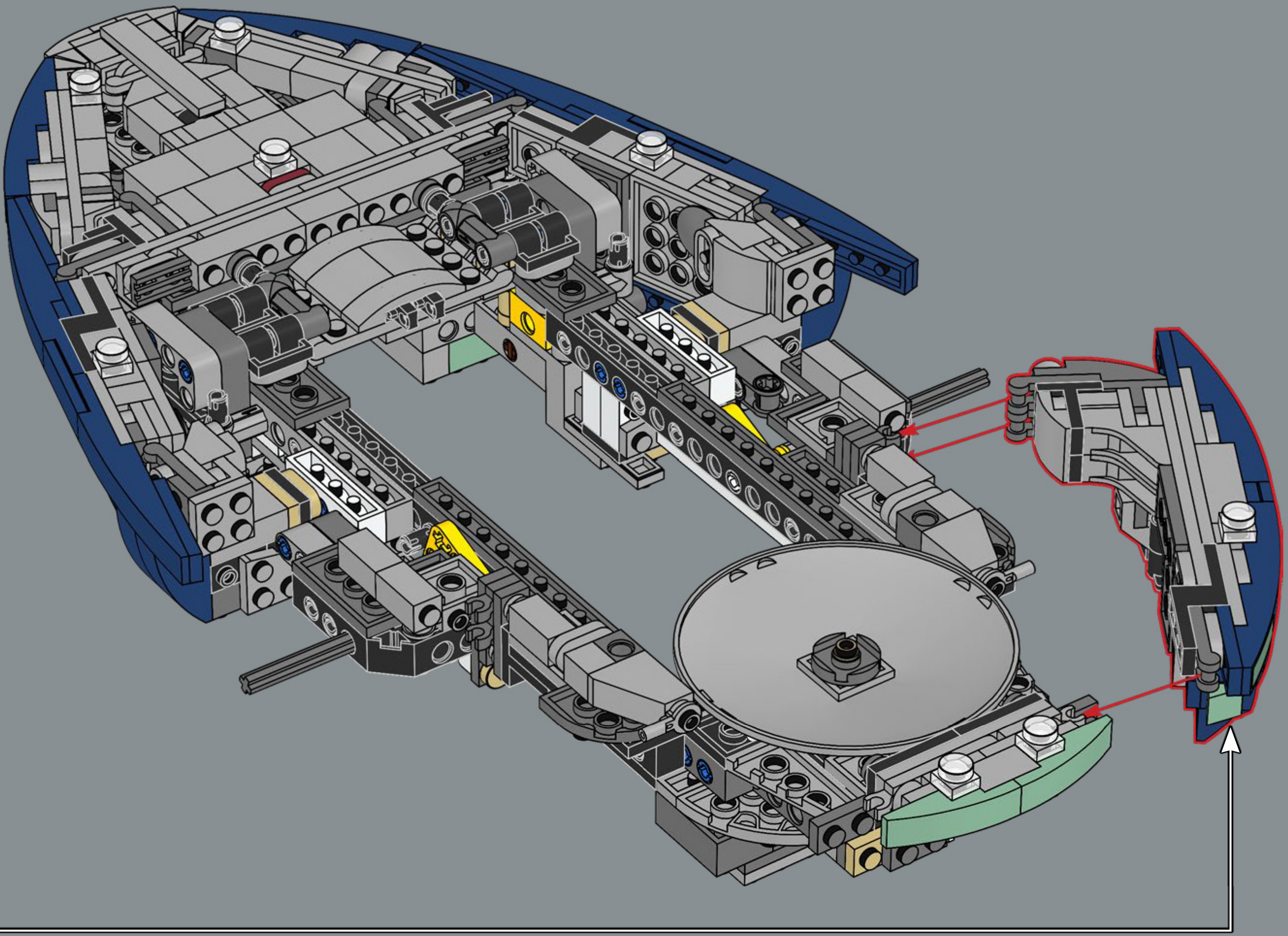

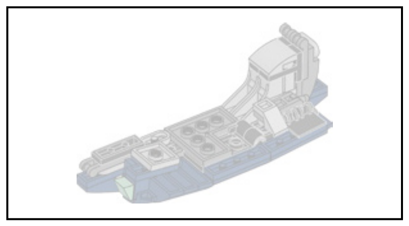

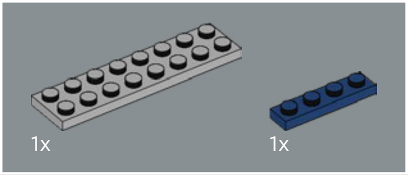

296

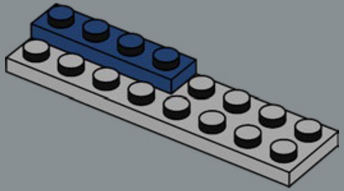

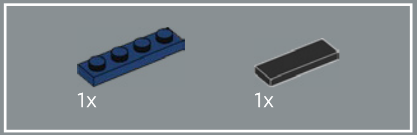

297

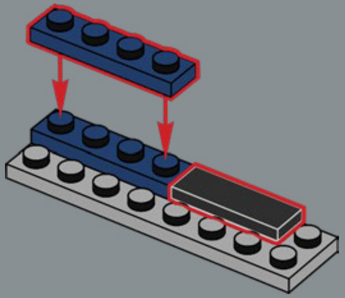

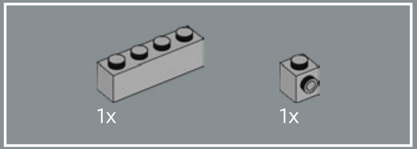

298

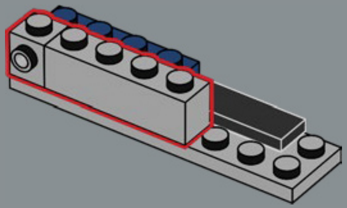

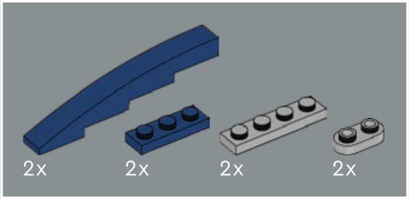

299

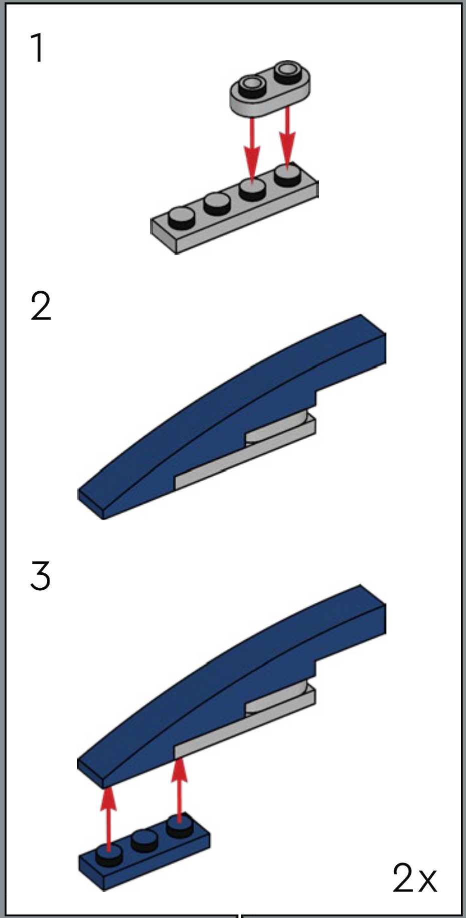

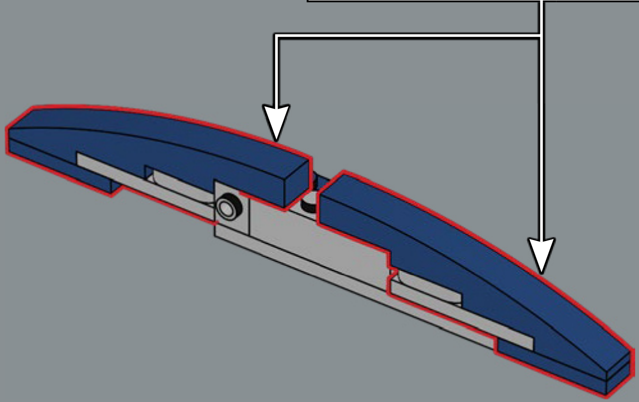

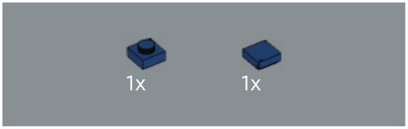

300

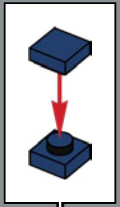

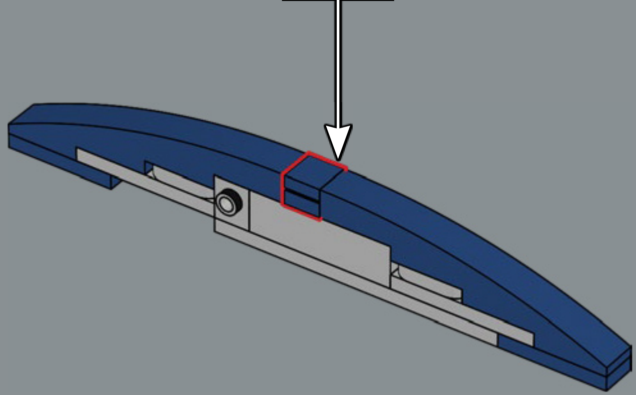

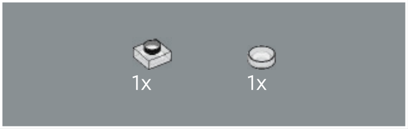

301

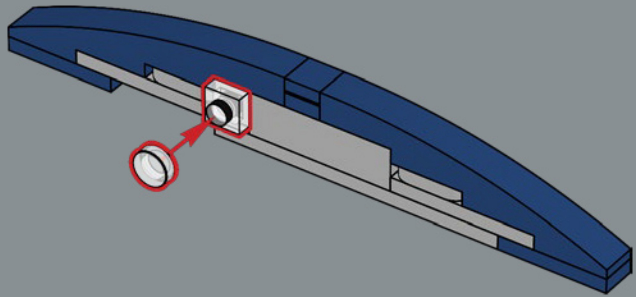

302

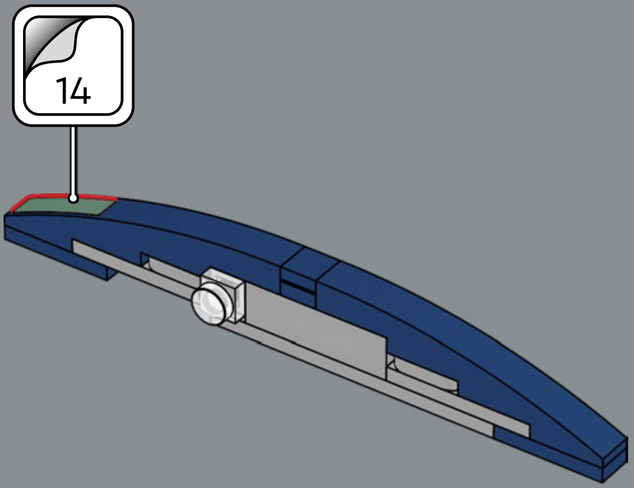

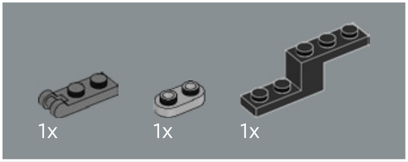

303

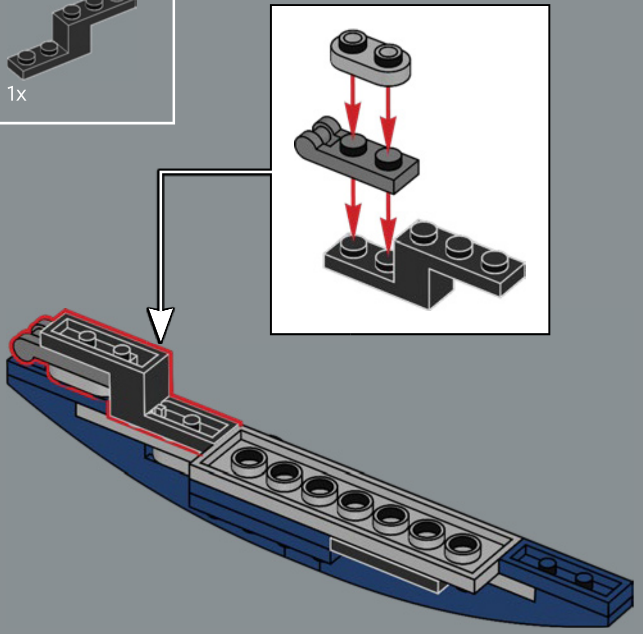

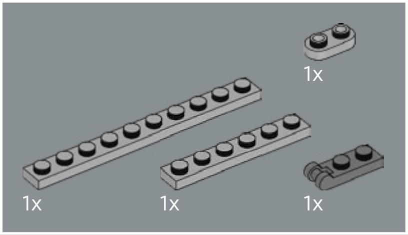

304

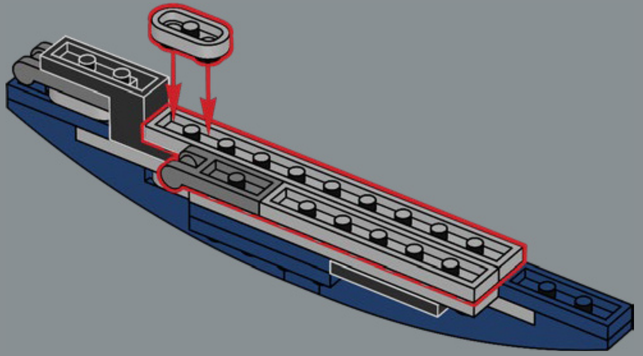

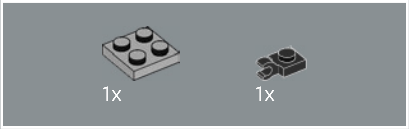

305

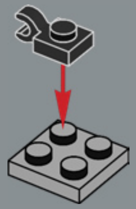

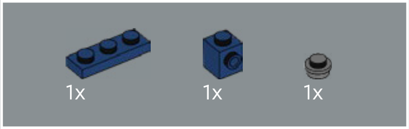

306

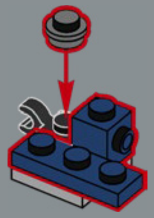

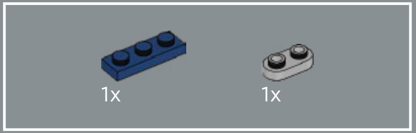

307

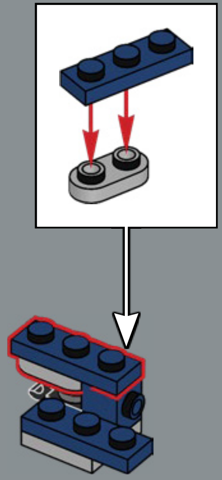

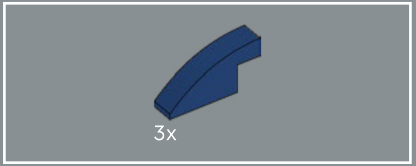

308

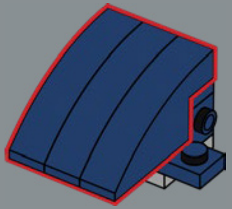

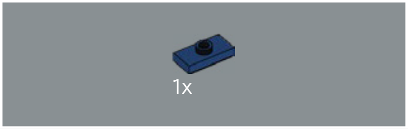

309

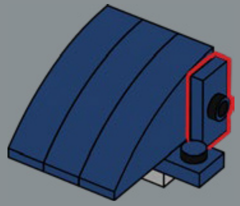

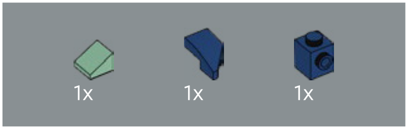

310

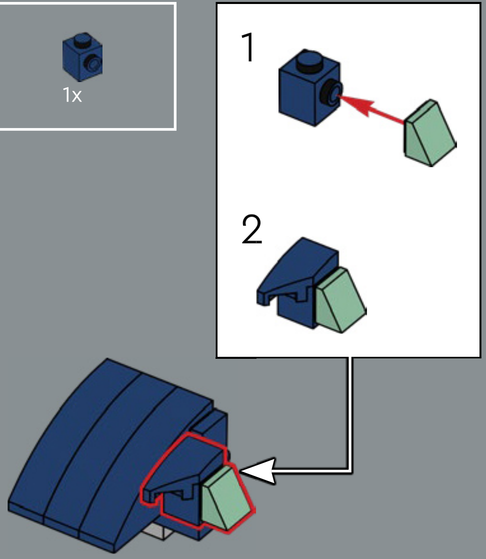

311

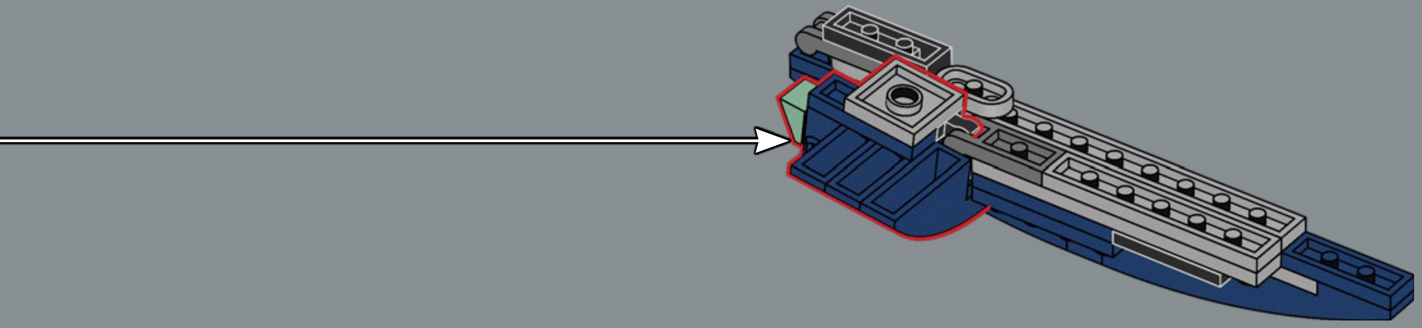

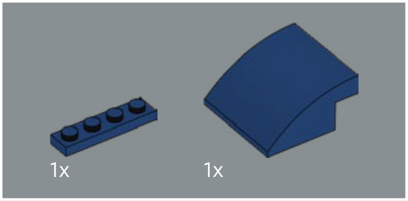

312

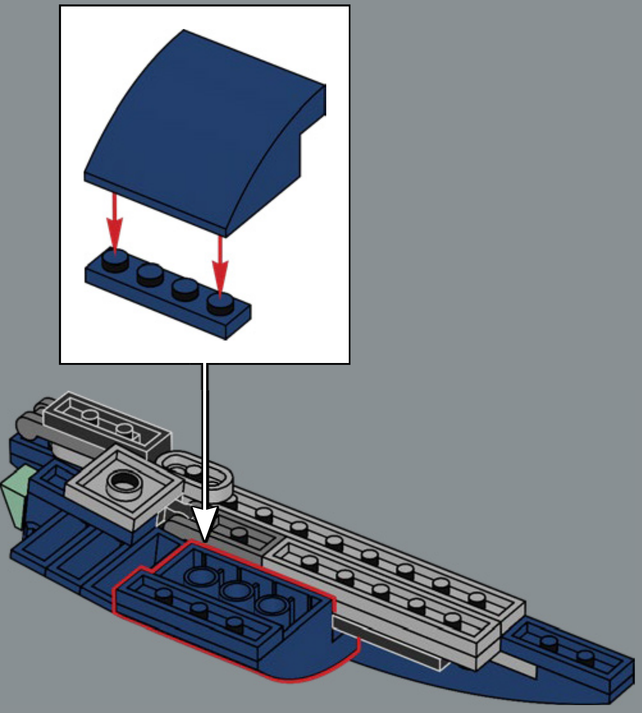

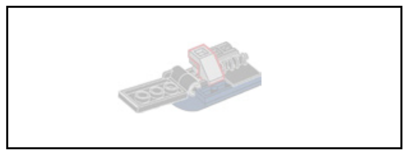

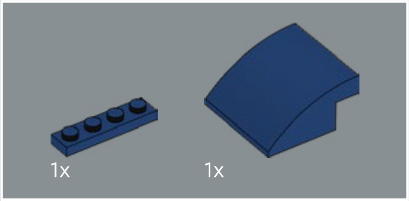

313

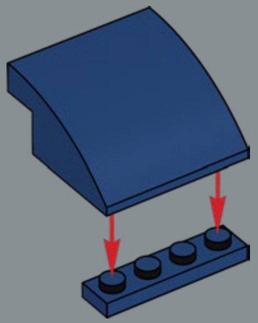

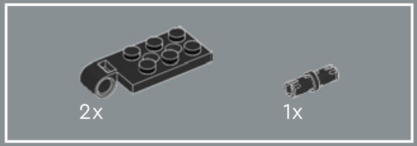

314

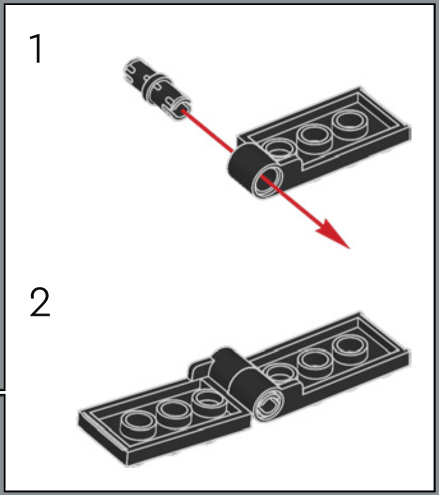

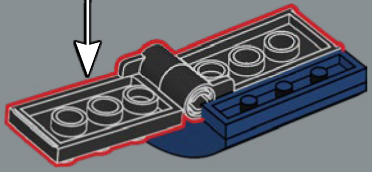

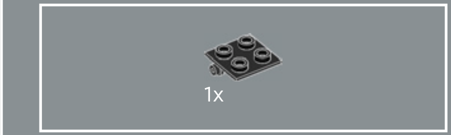

315

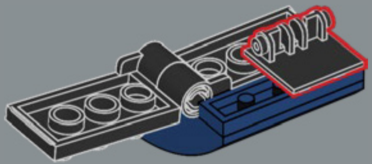

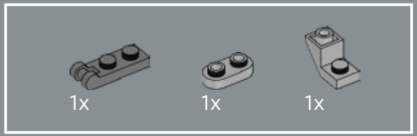

316

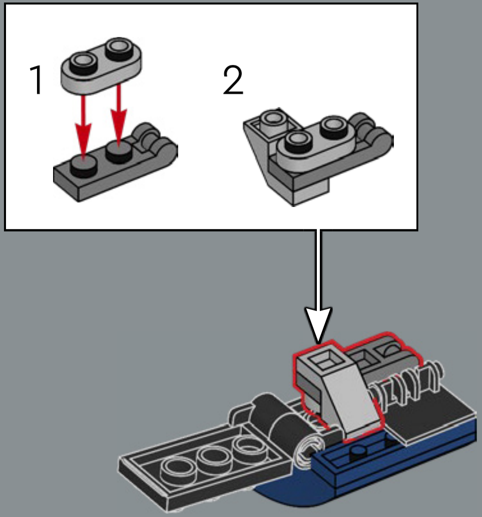

317

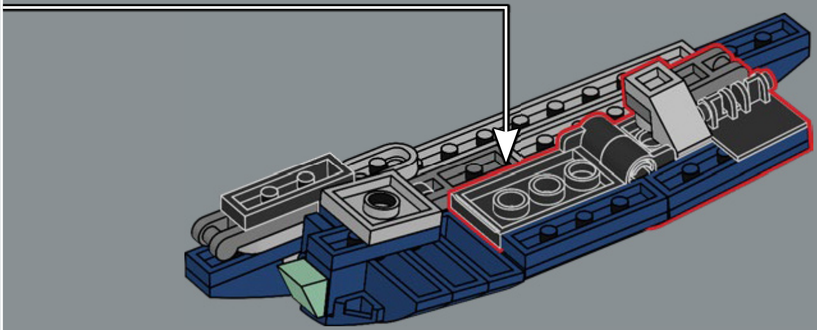

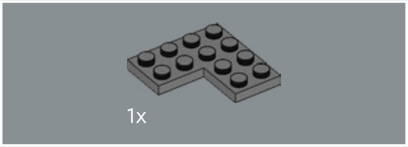

318

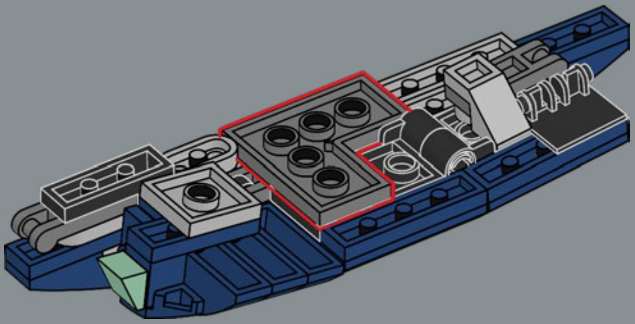

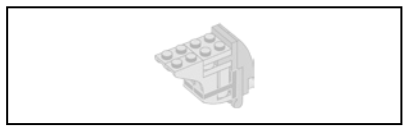

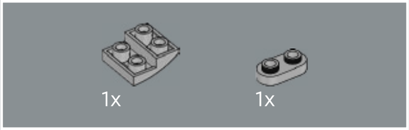

319

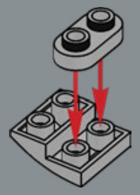

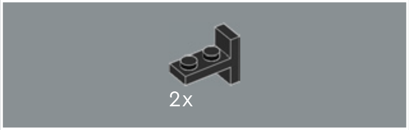

320

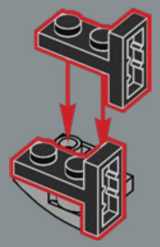

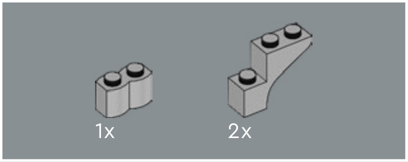

321

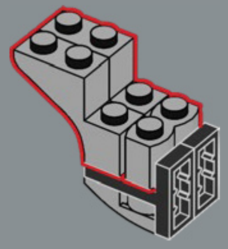

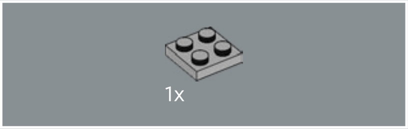

322

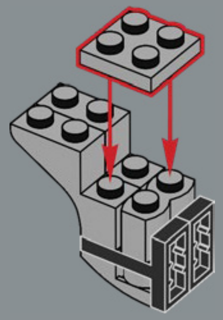

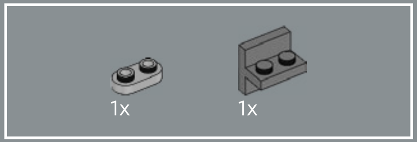

323

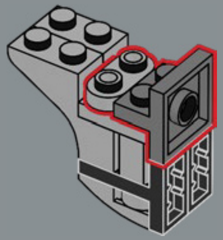

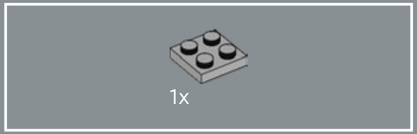

324

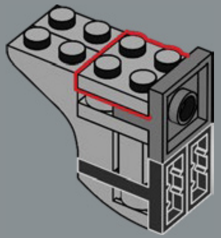

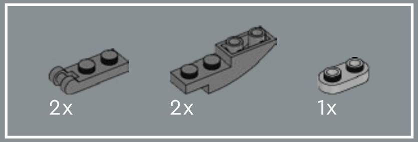

325

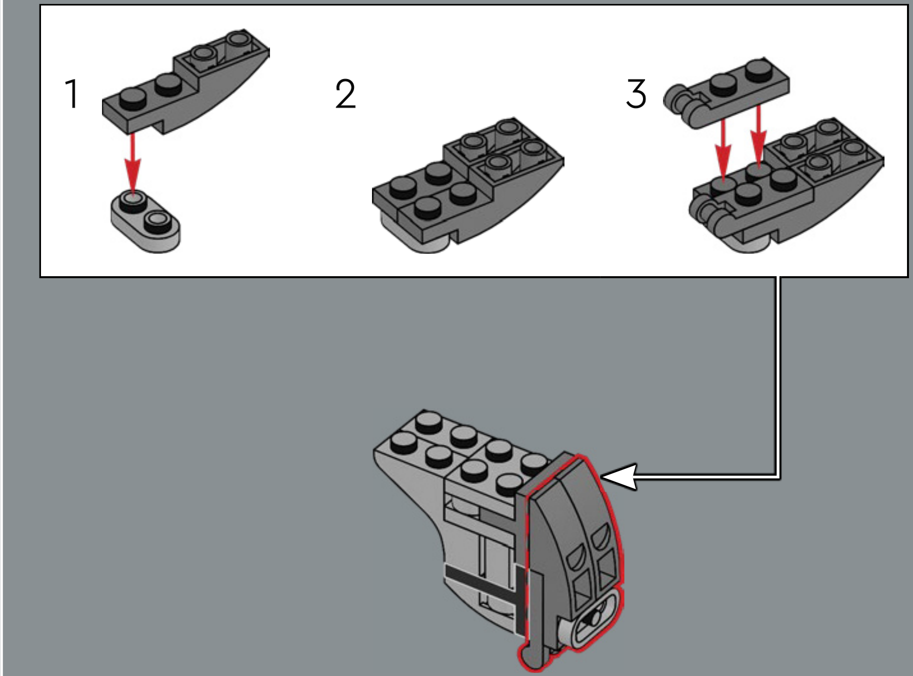

326

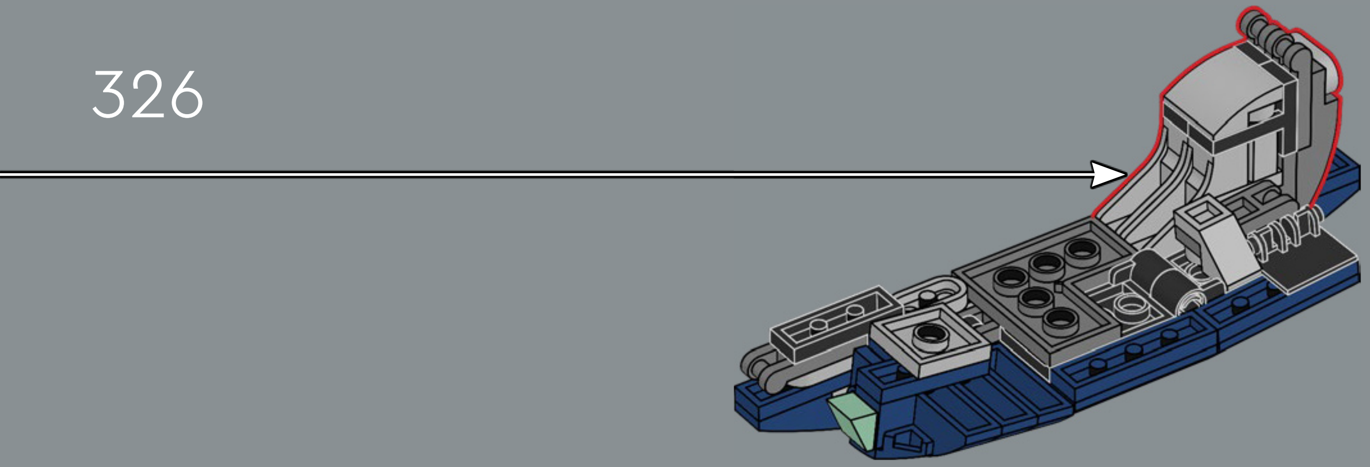

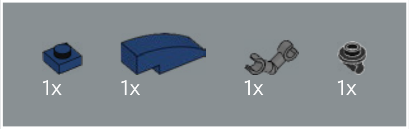

327

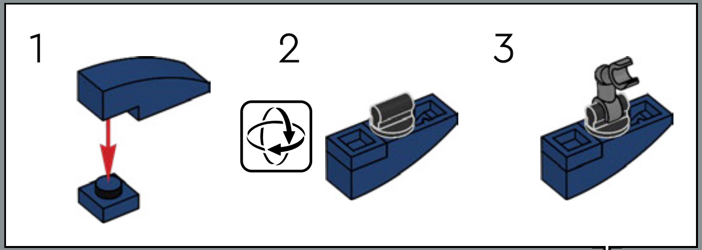

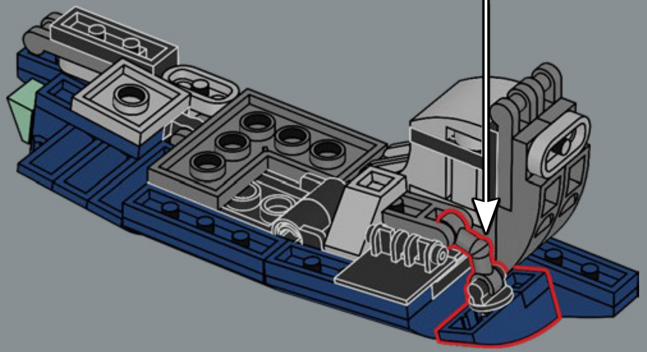

328

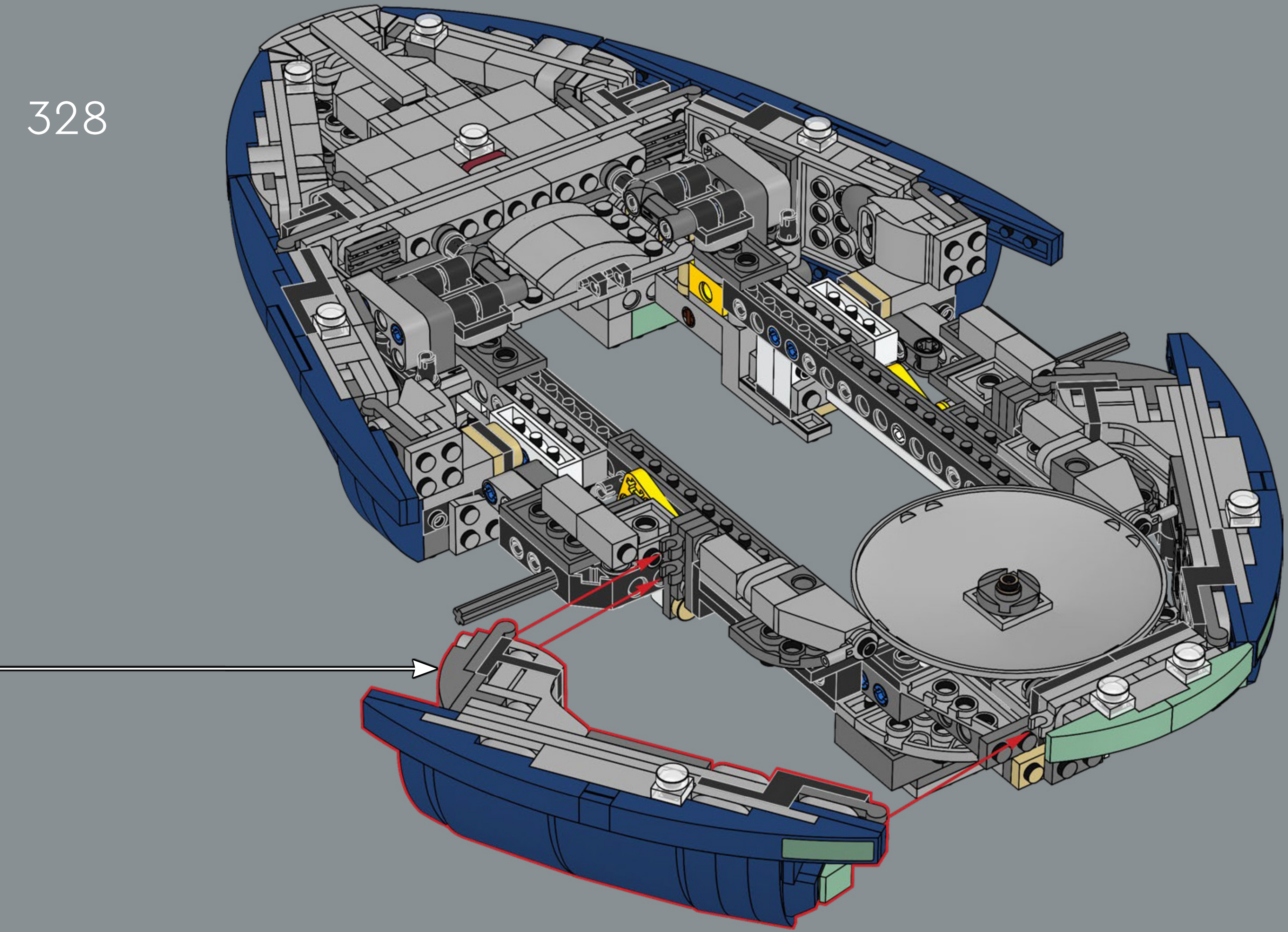

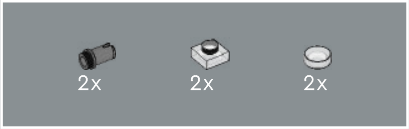

329

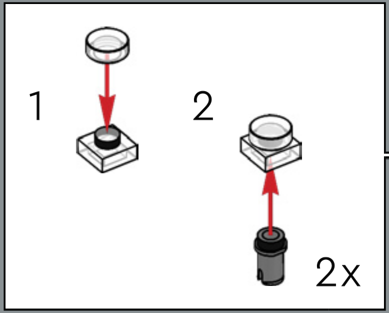

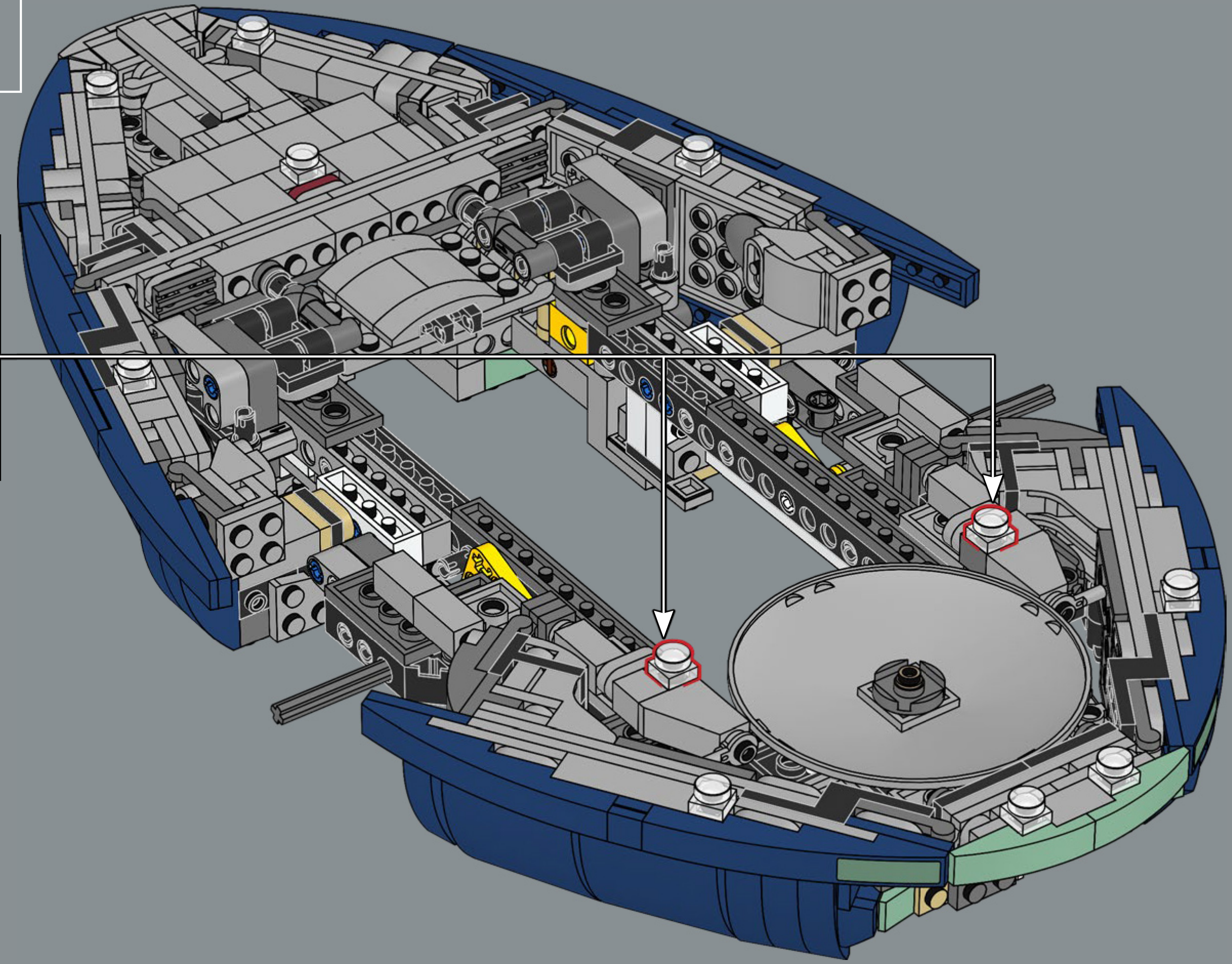

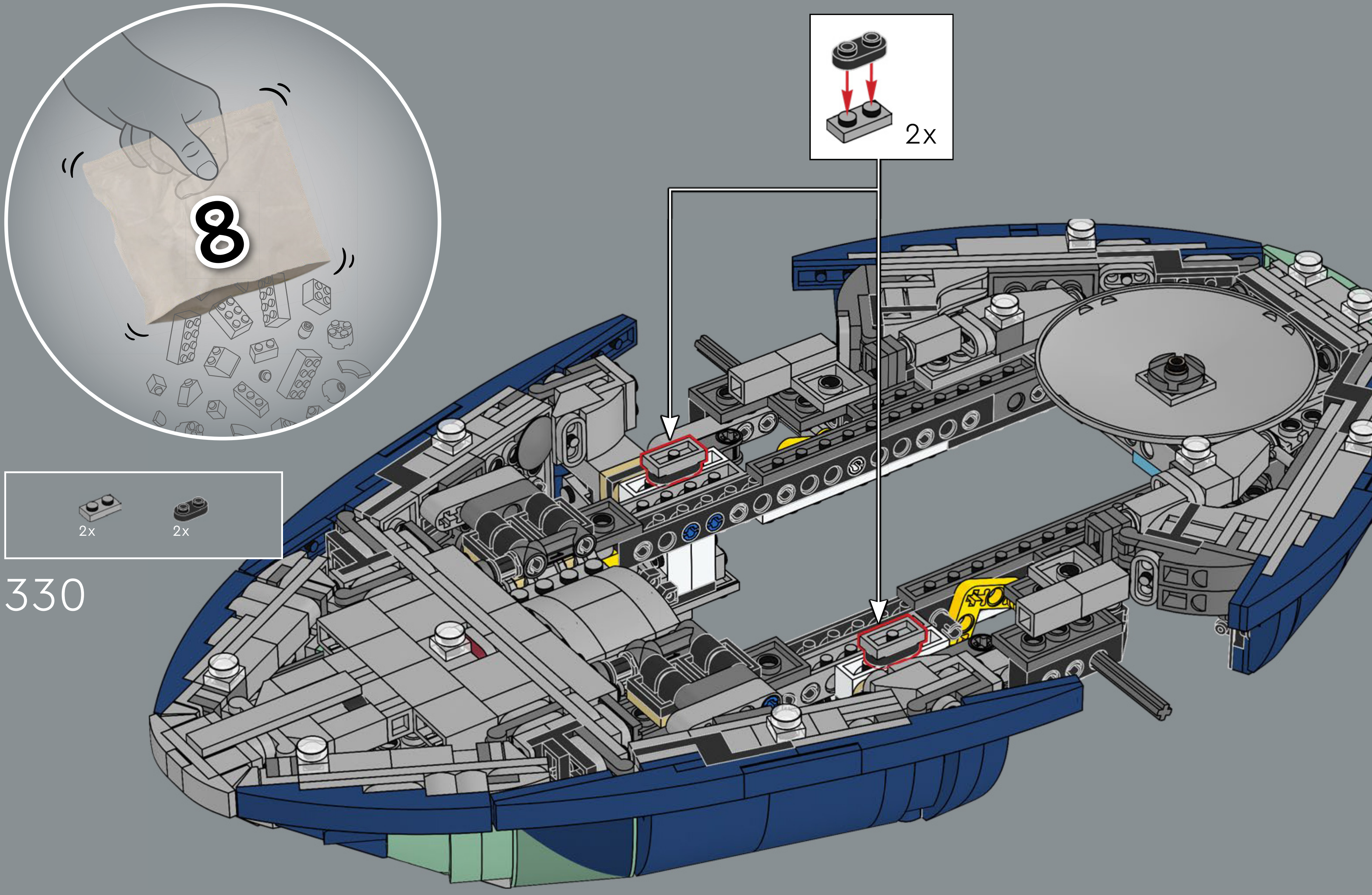
8
2x
2x
330
2x

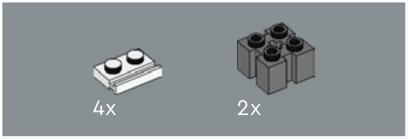

331

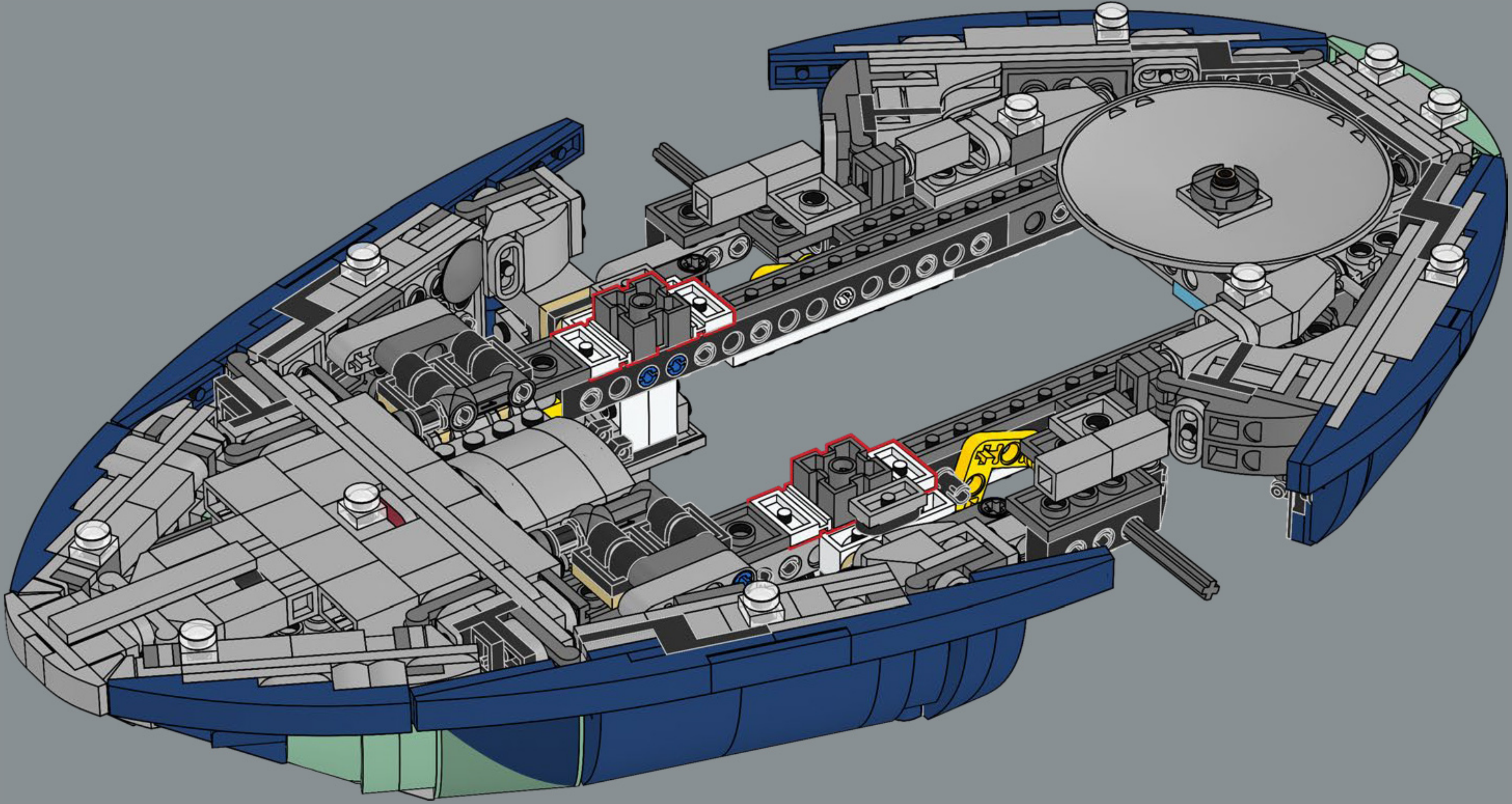

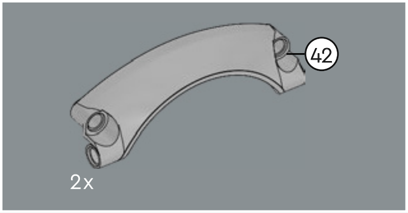

332

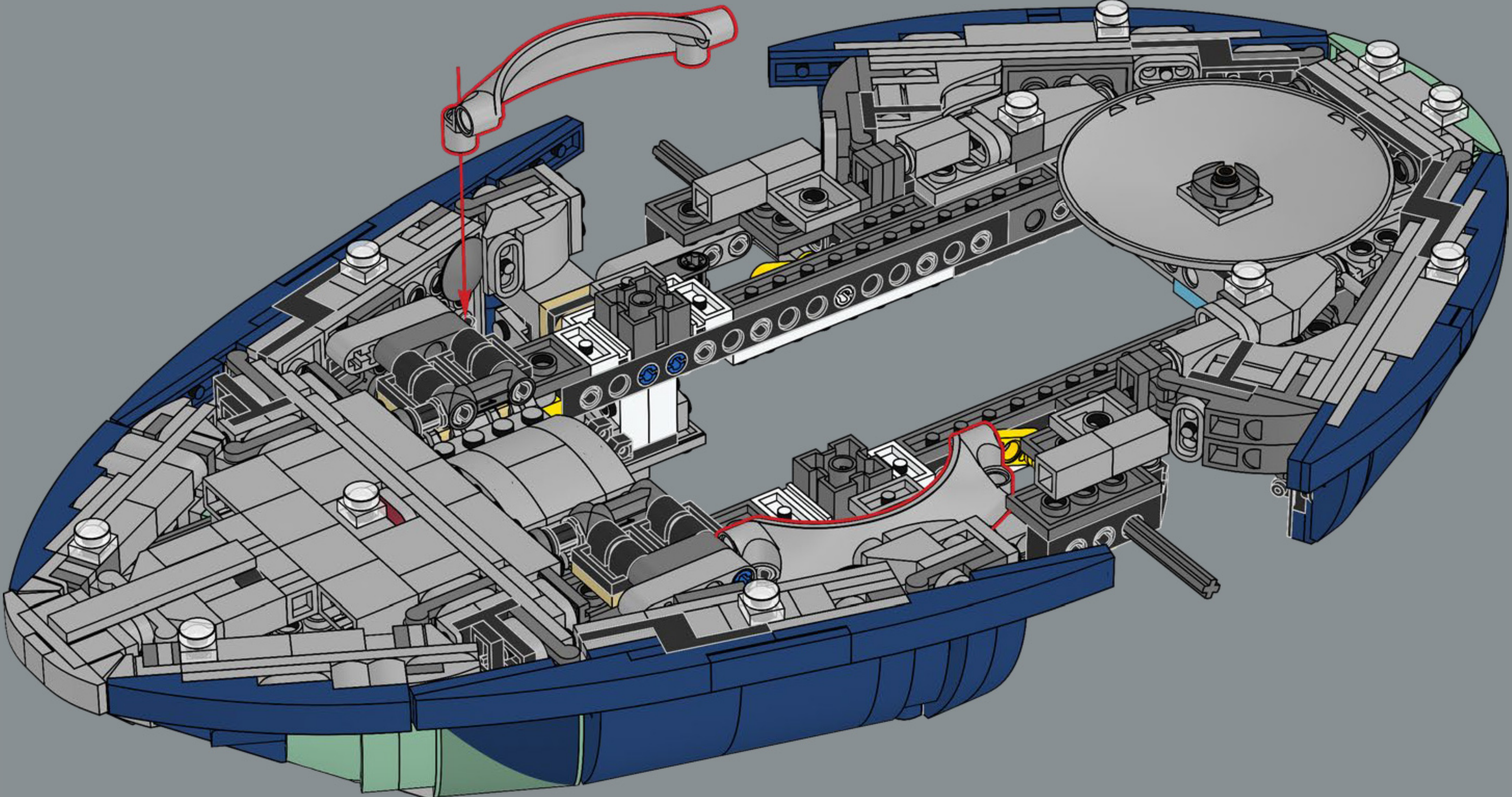

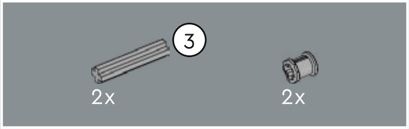

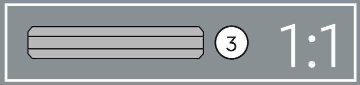

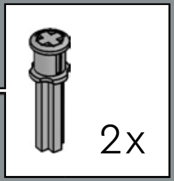

333

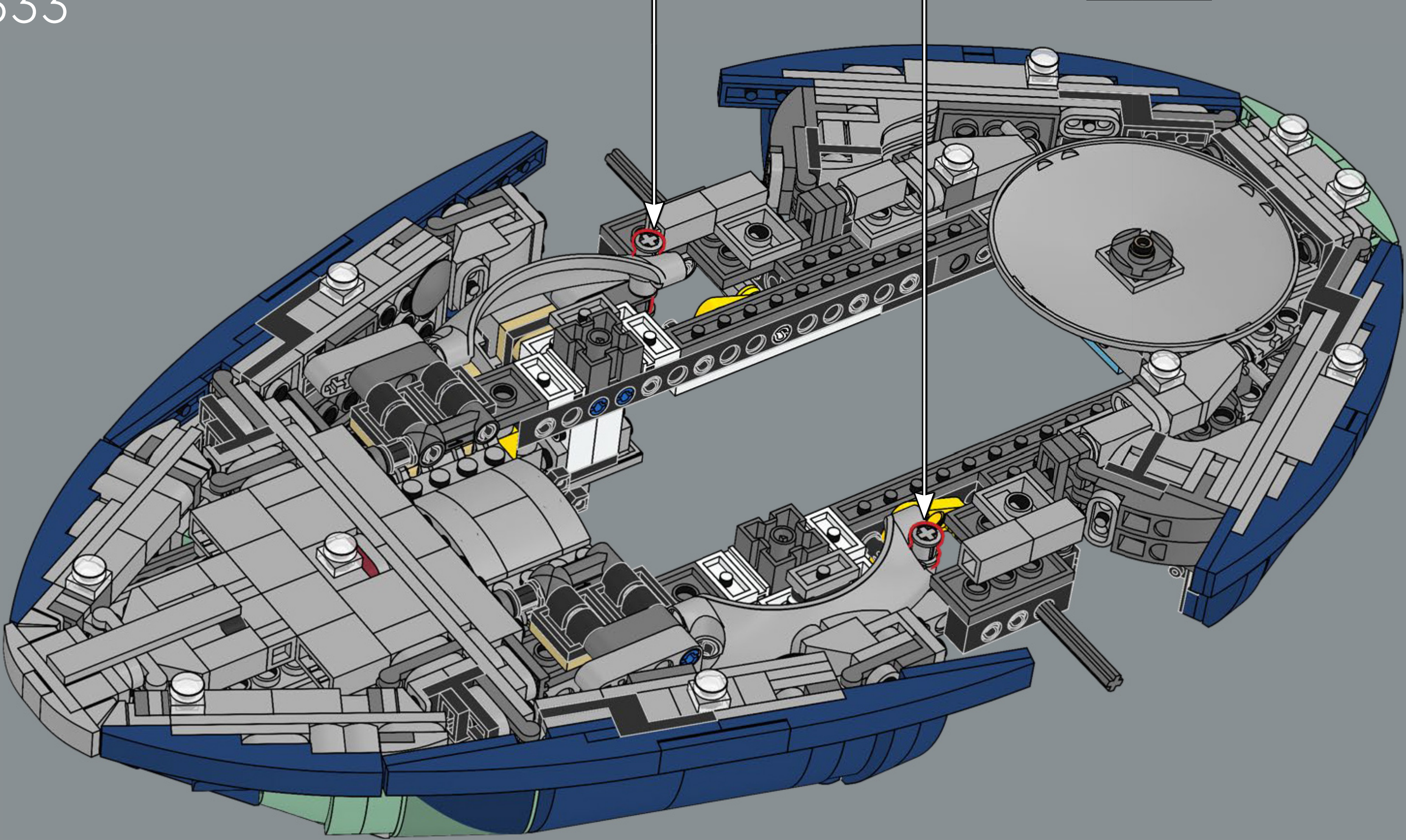

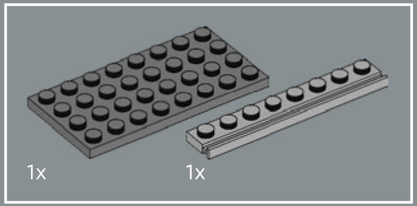

334

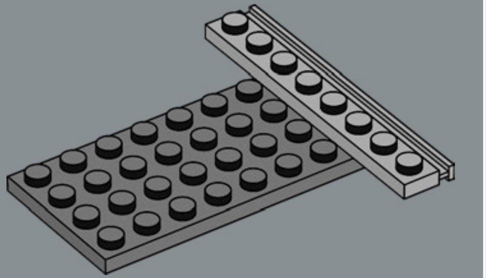

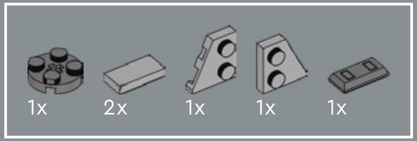
1x
2x
1x
1x
1x

335

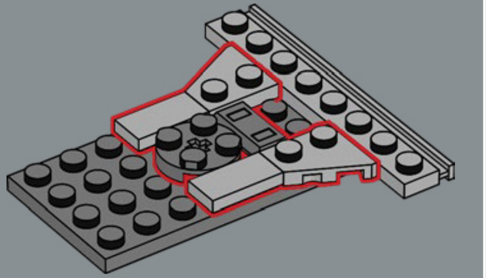

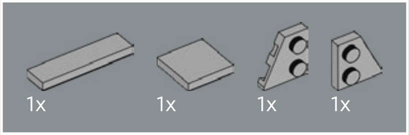

336

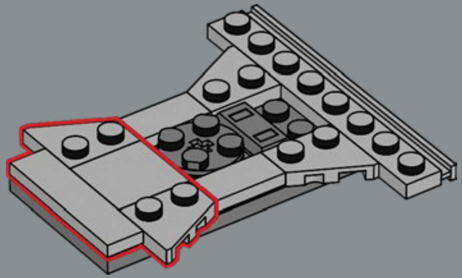

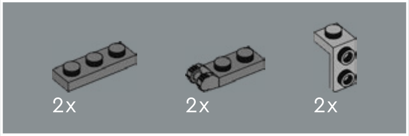

337

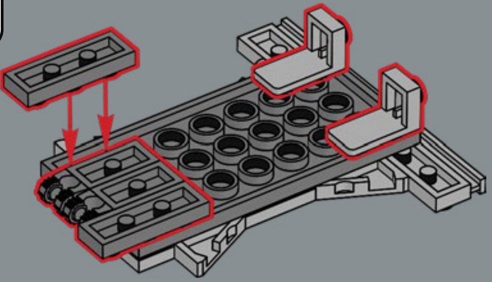

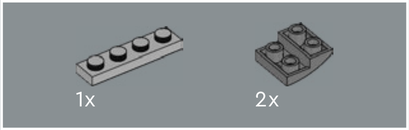

338

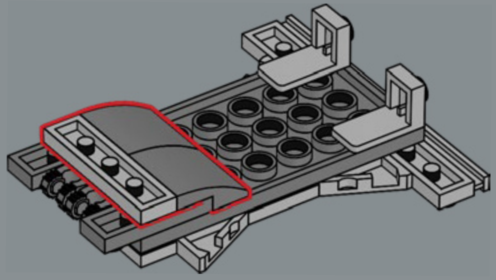

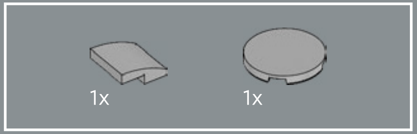

339

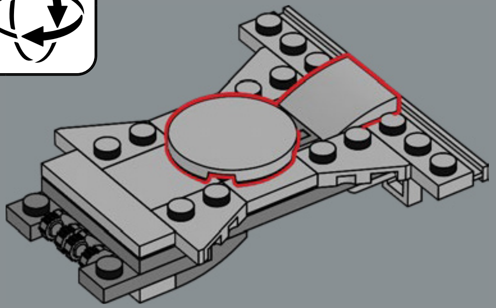

340

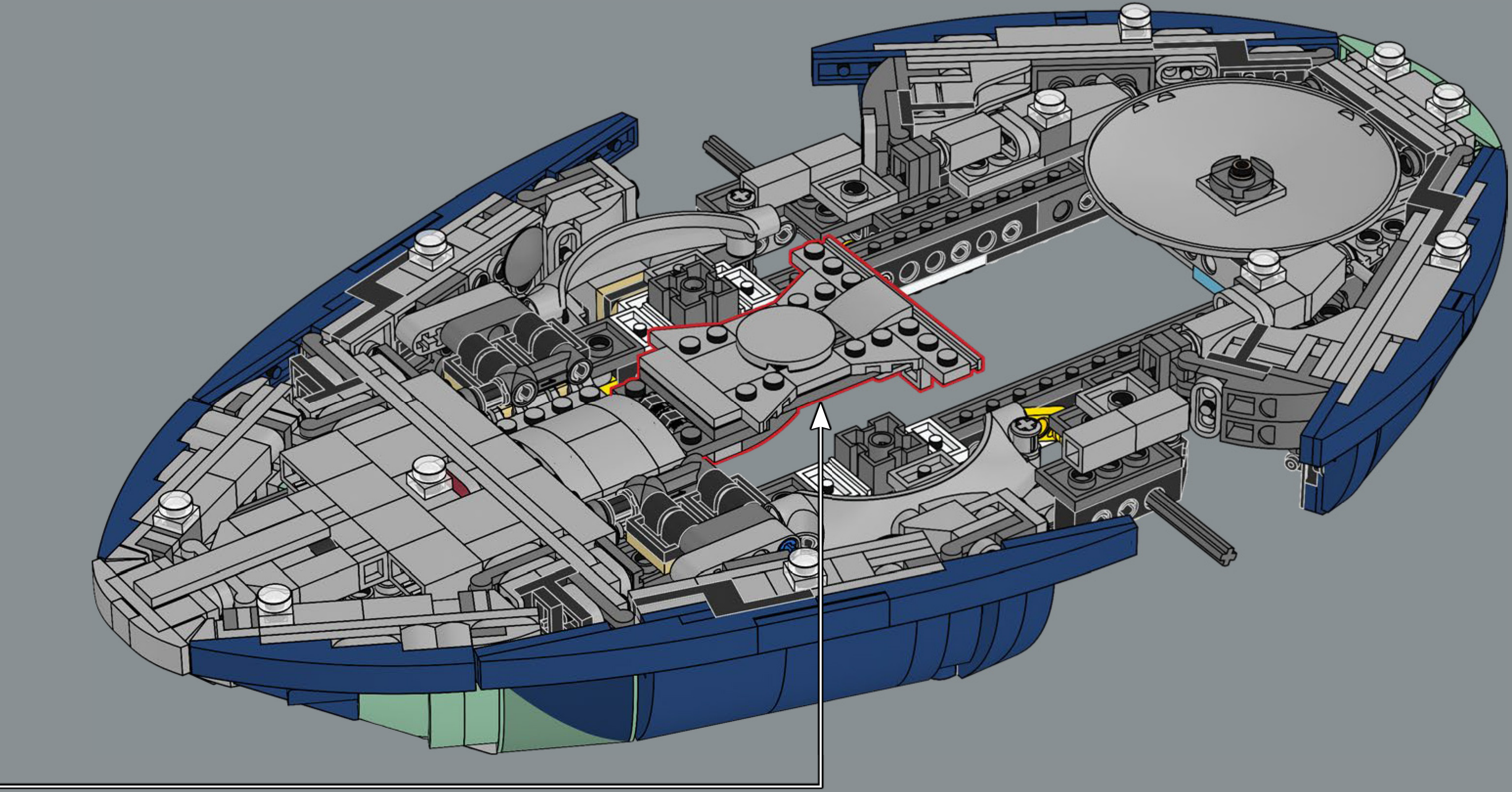

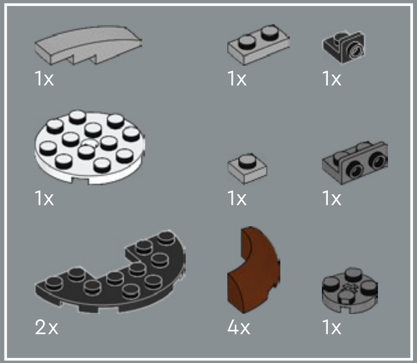
1x
1x
1x
1x
1x
1x
2x
4x
1x

341

1

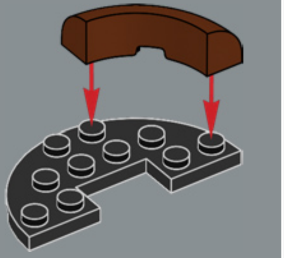

2

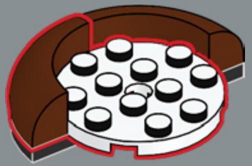

3

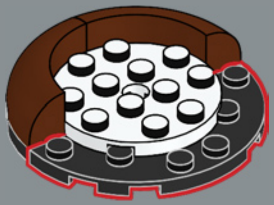

4

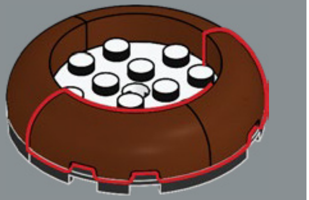

5

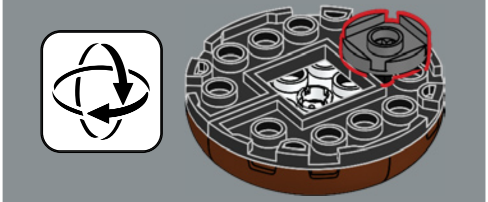

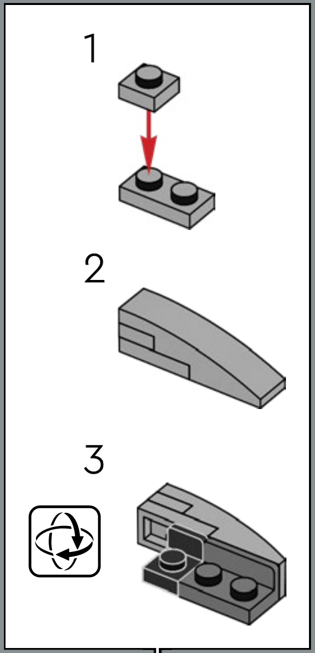

6

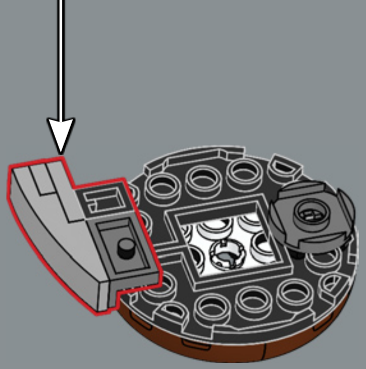

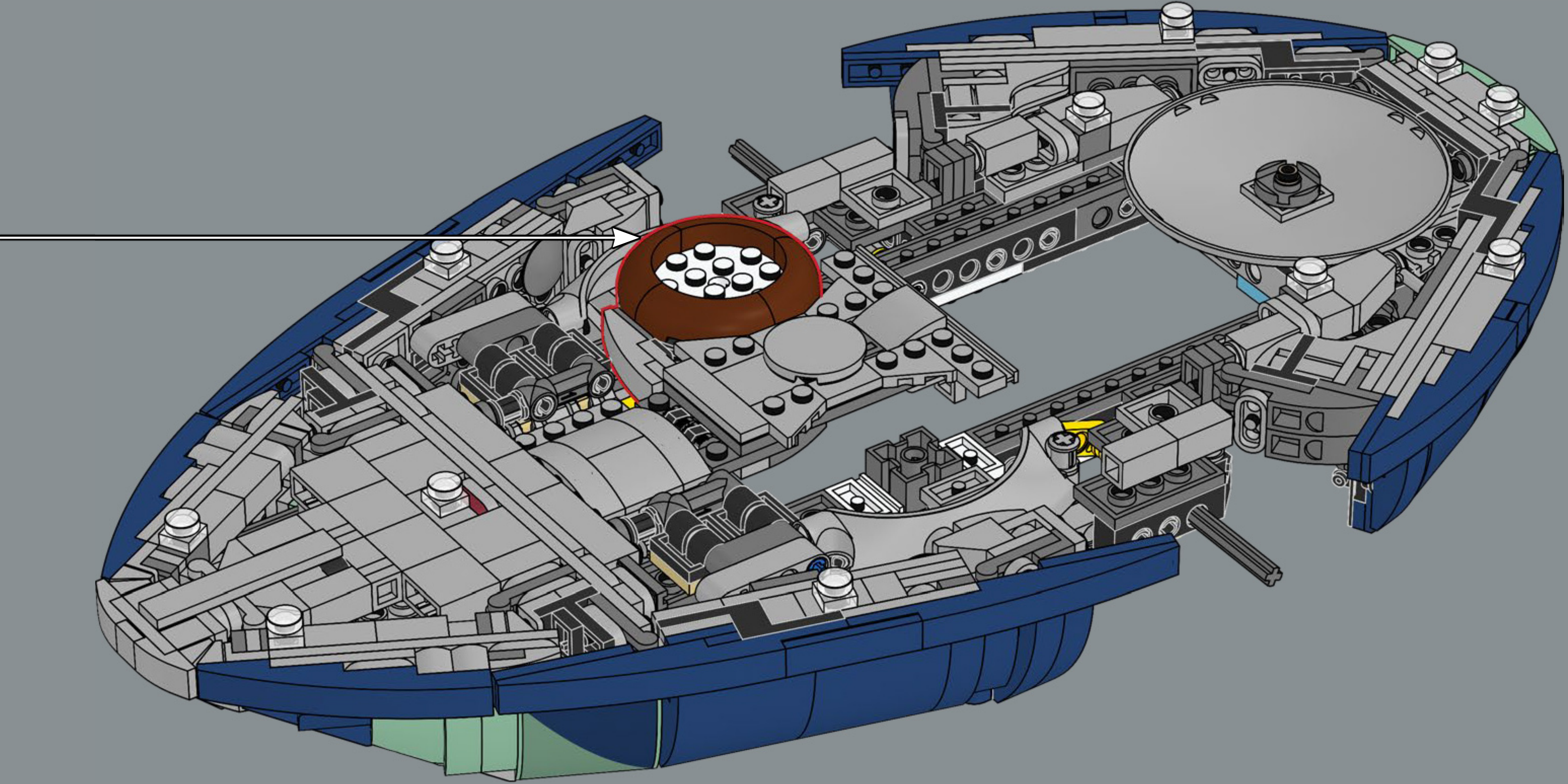

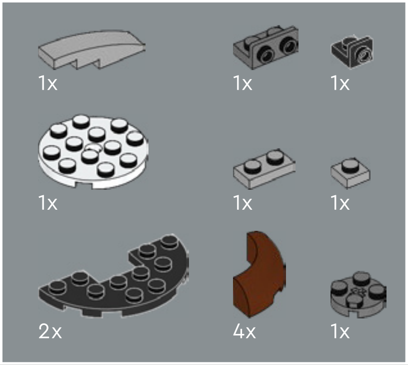
1x
1x
1x
1x
1x
1x
2x
4x
1x

342

1

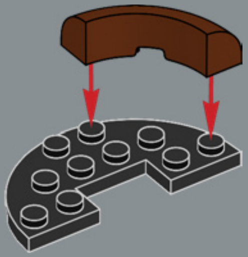

2

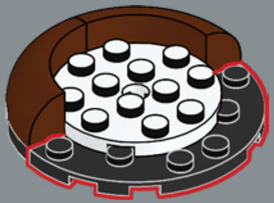

3

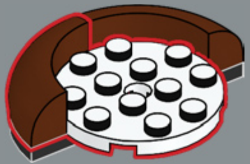

4

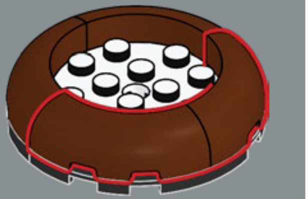

5

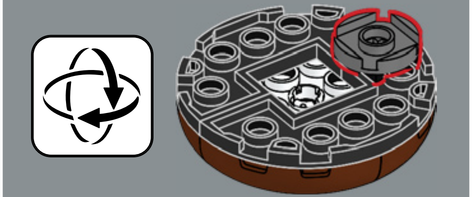

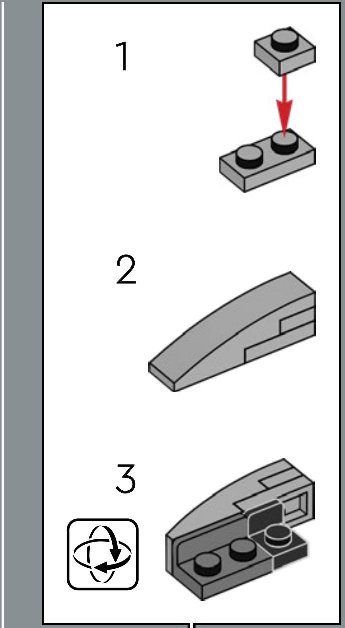

6

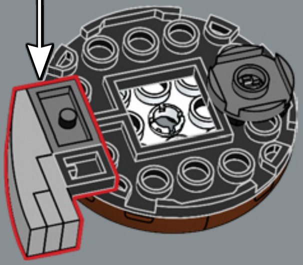

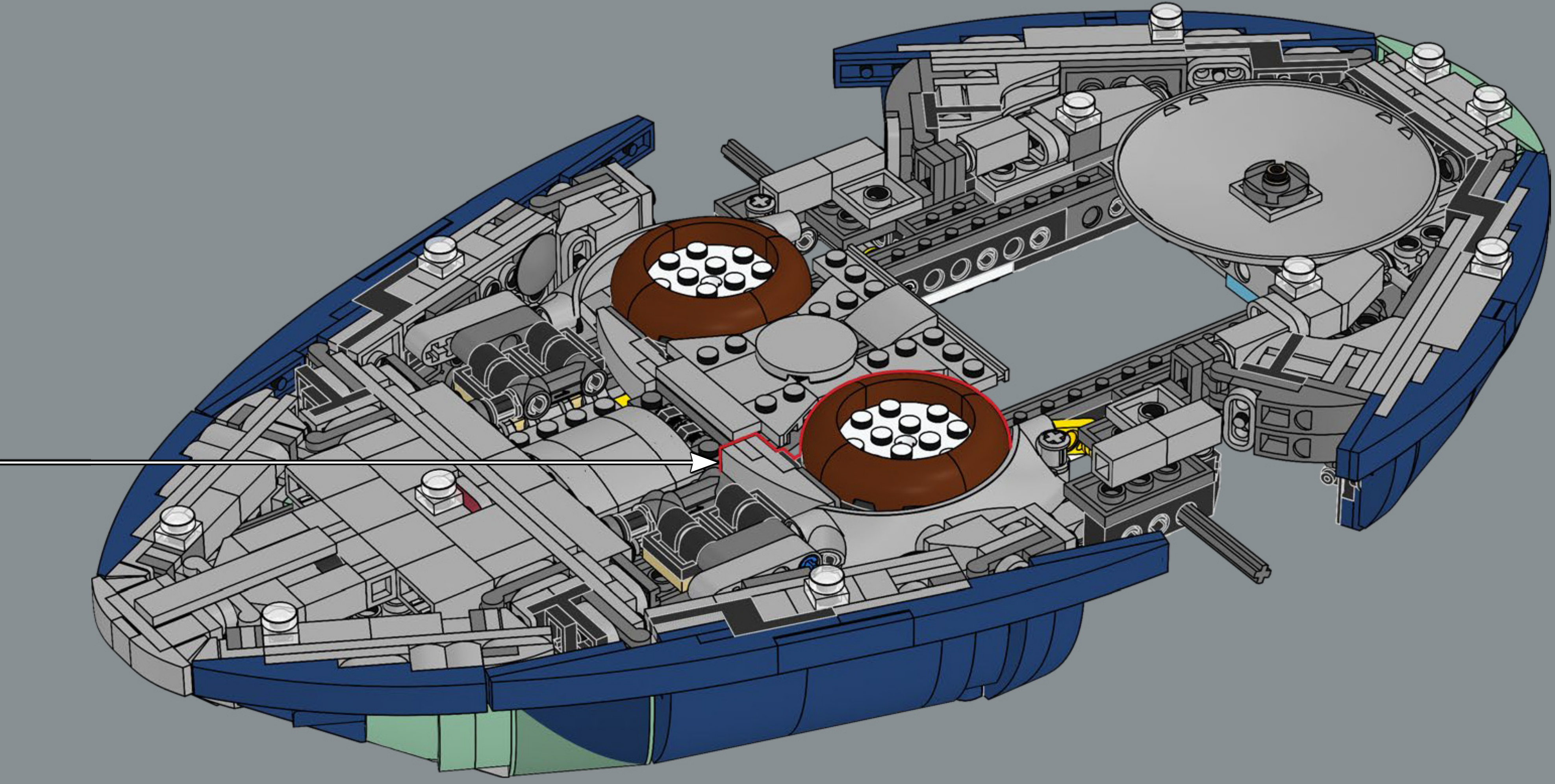

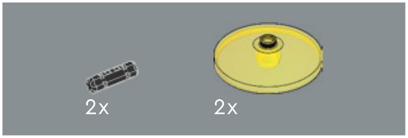

343

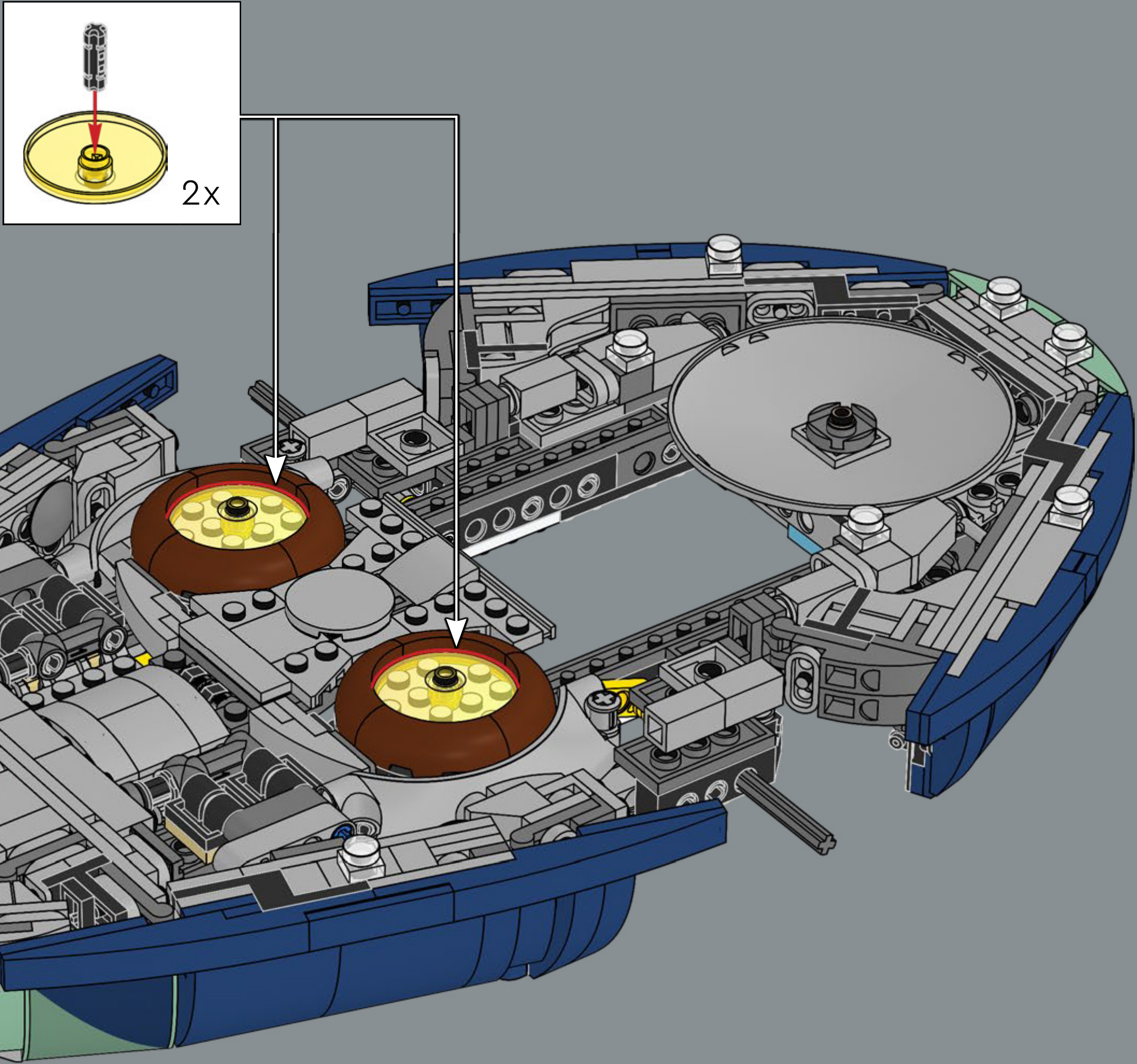

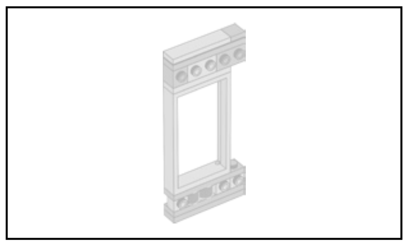

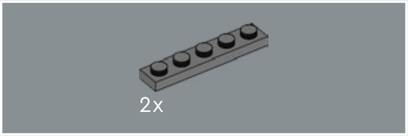

344

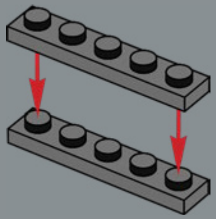

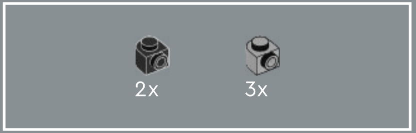

345

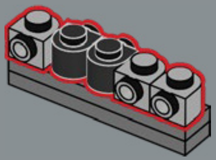

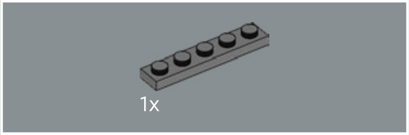

346

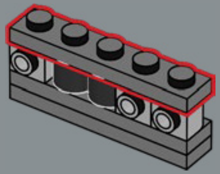

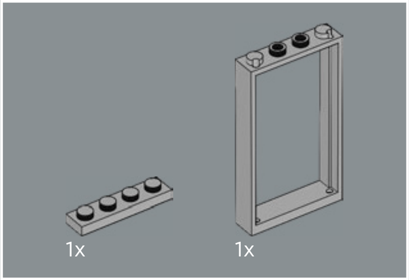

347

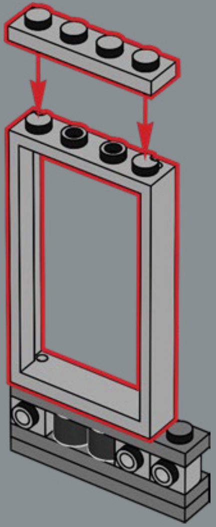

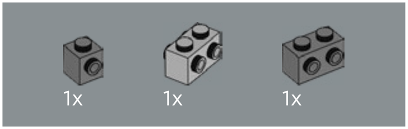

348

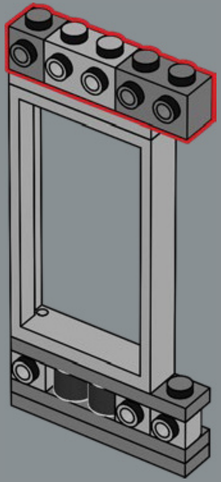

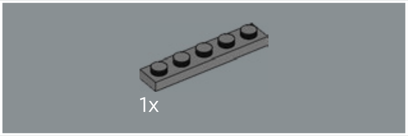

349

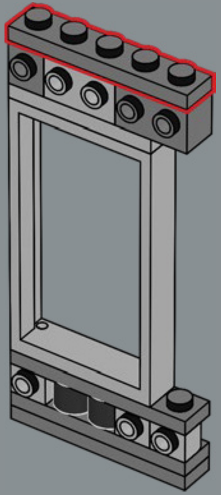

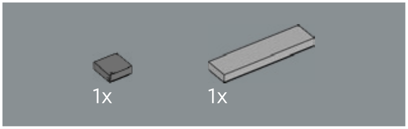

350

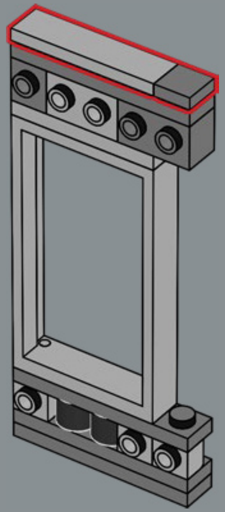

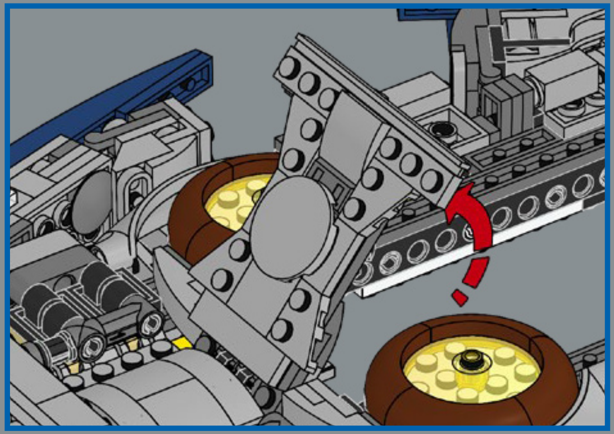

351

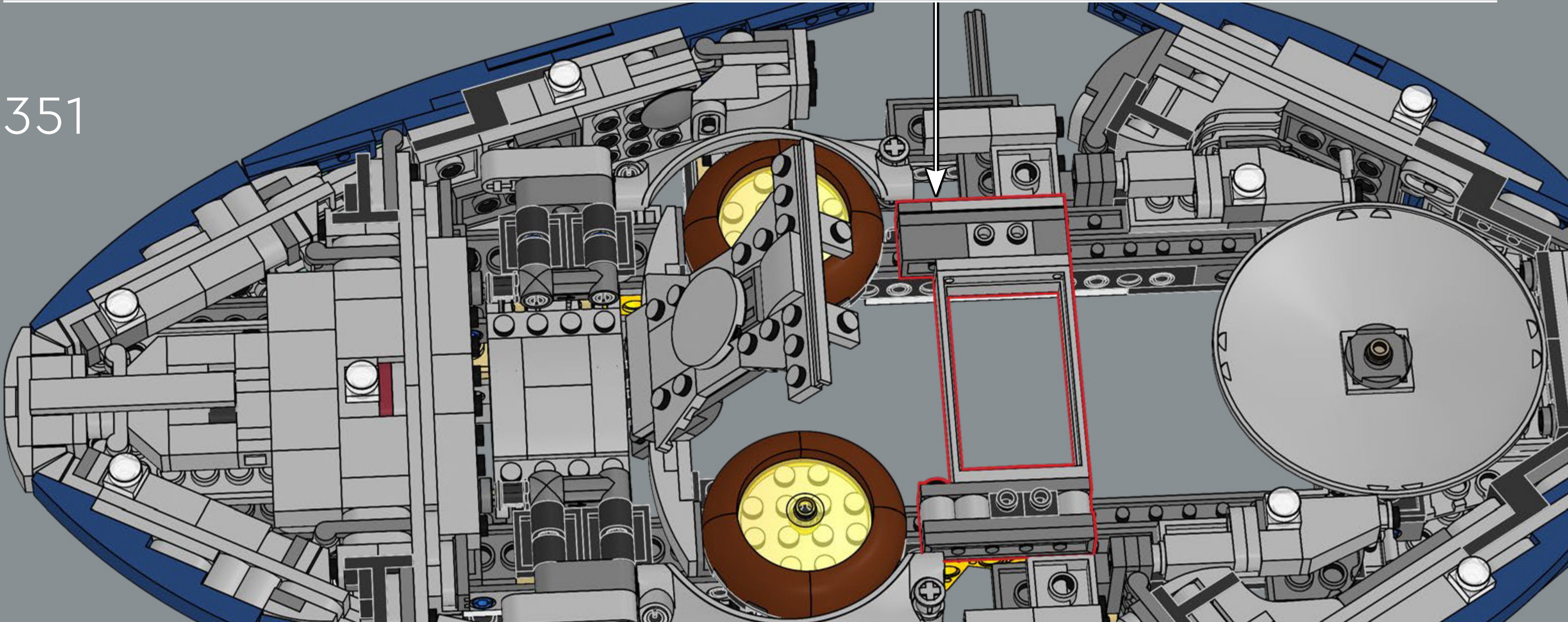

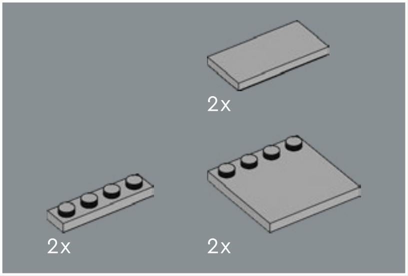

352

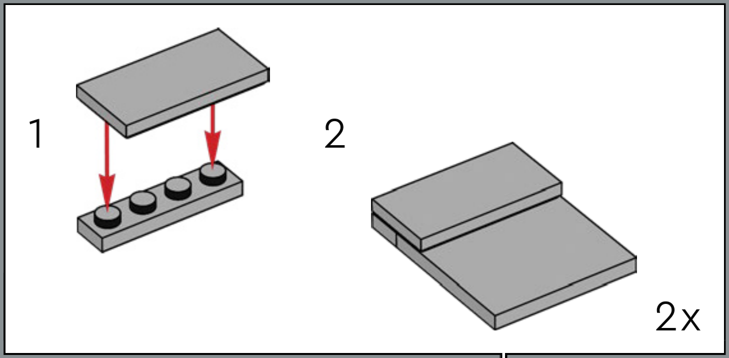

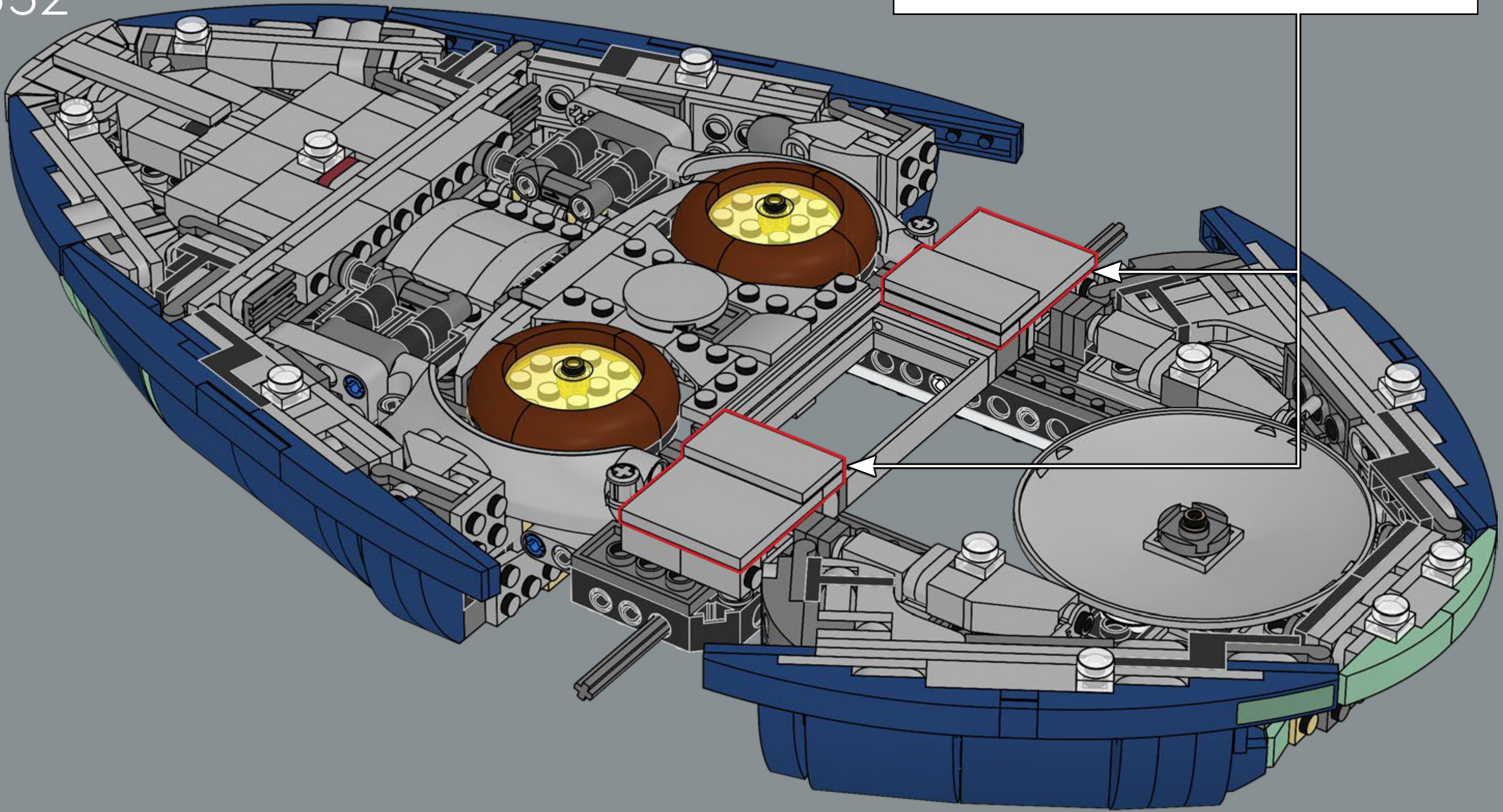

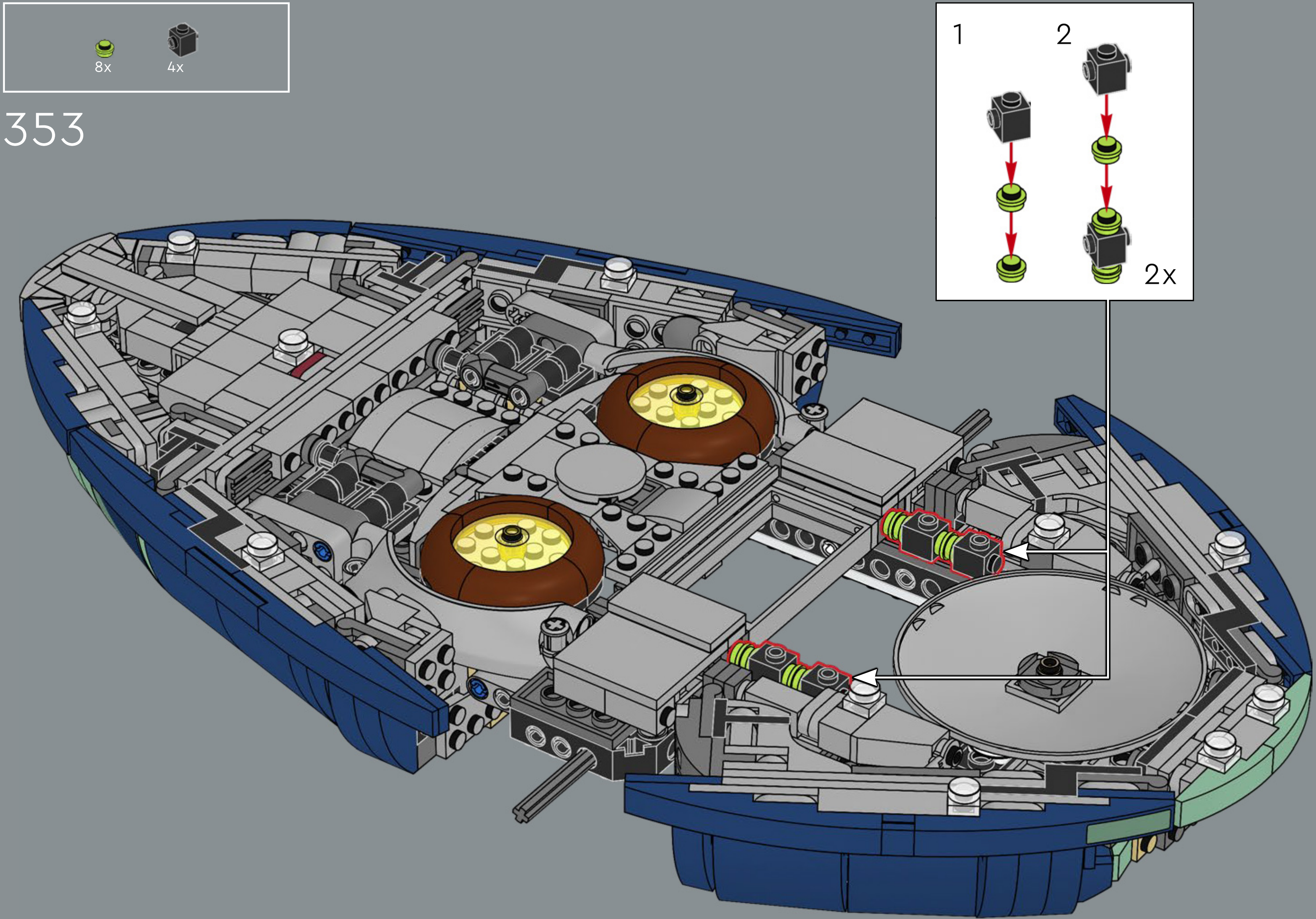

353

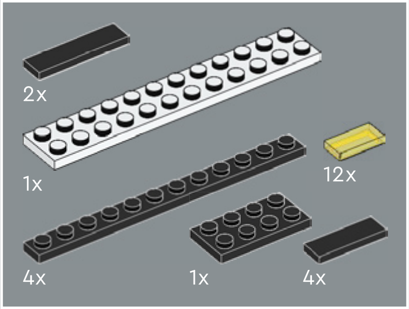
2x
1x
12x
4x
1x
4x

354

1

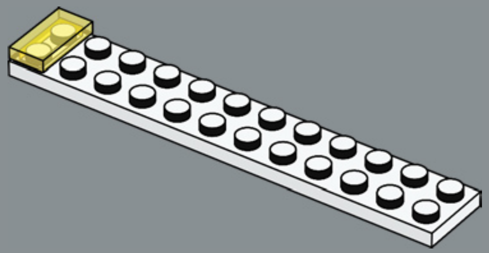

2

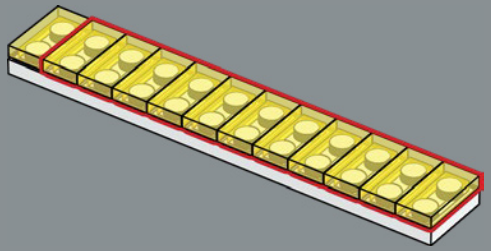

3

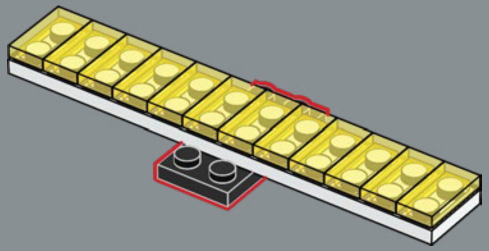

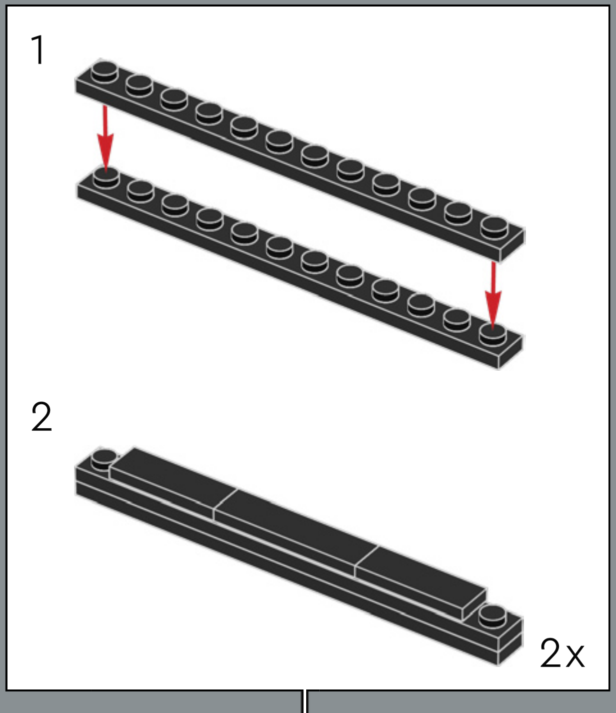

4

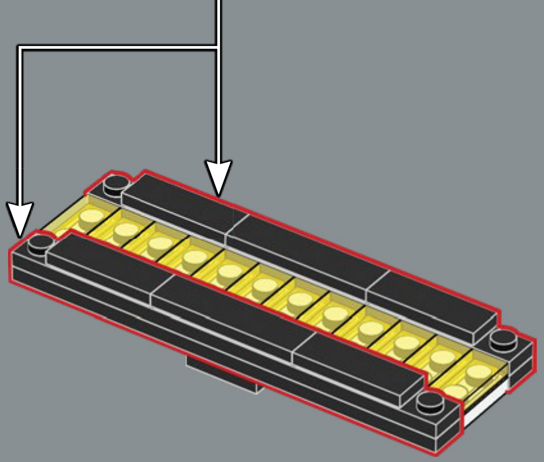

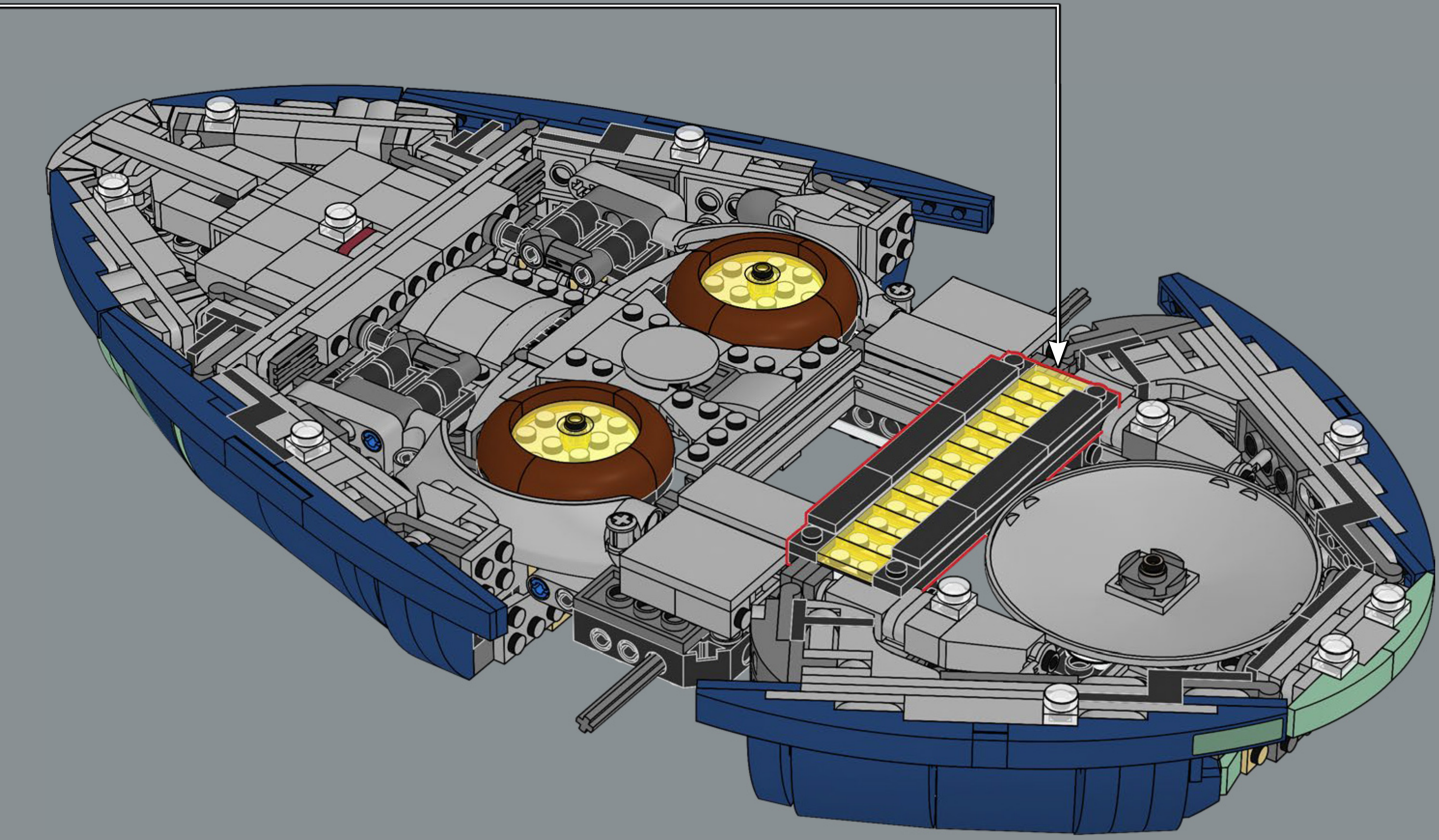

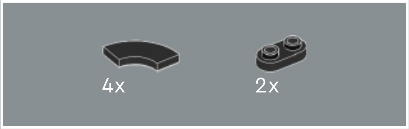

355

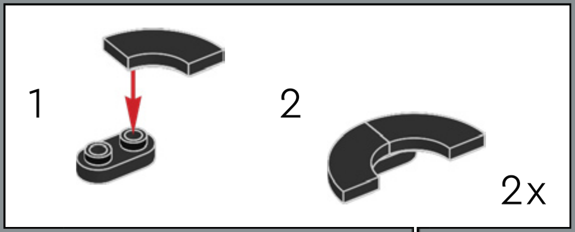

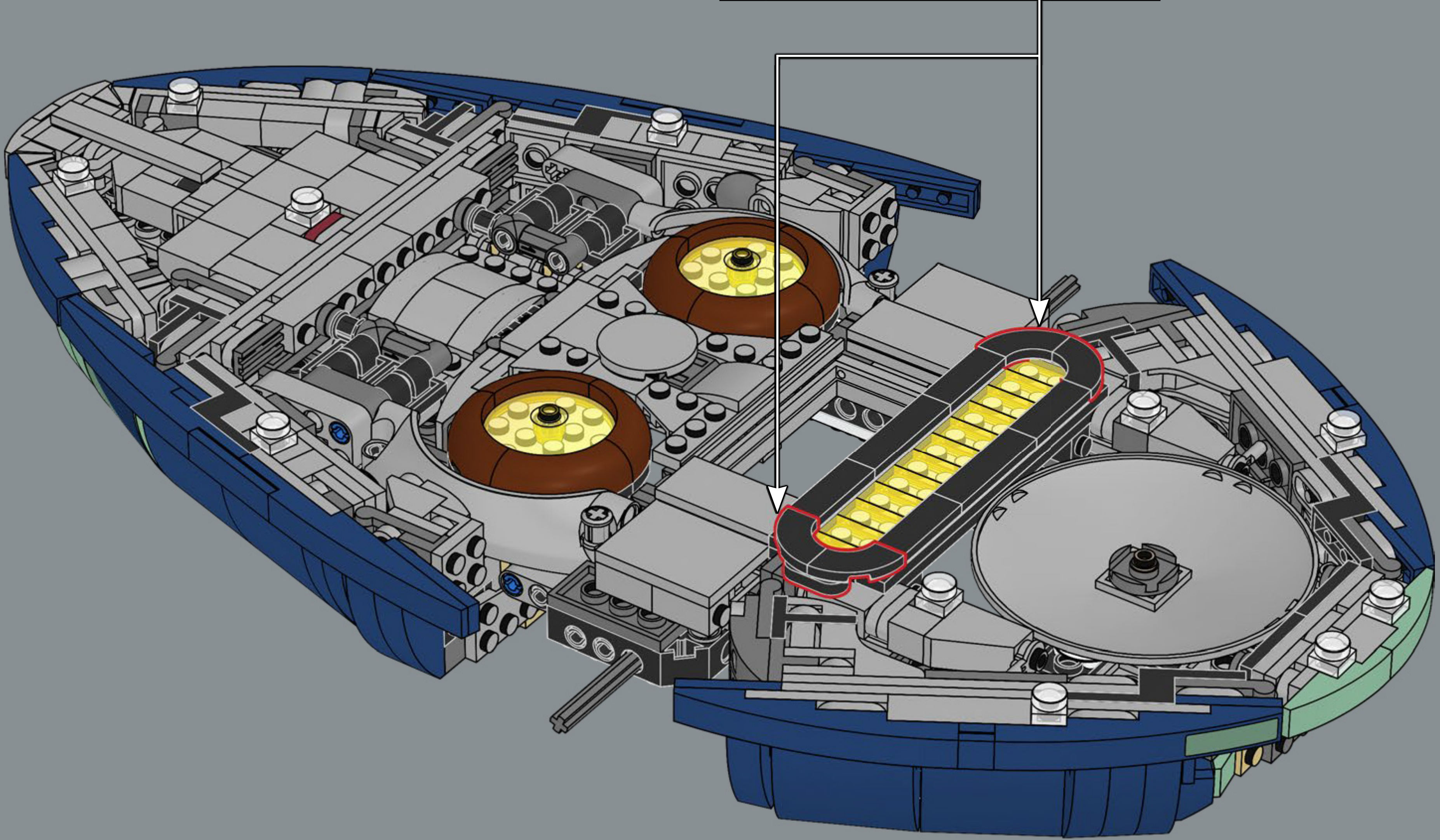

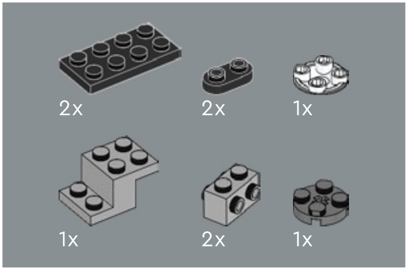
2x
2x
1x
1x
2x
1x

356

1

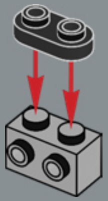

2

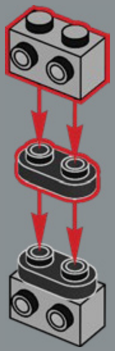

3

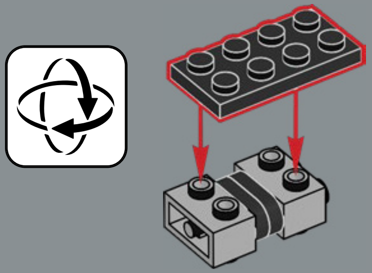

4

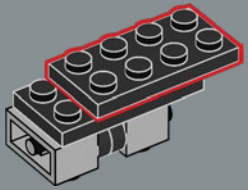

5

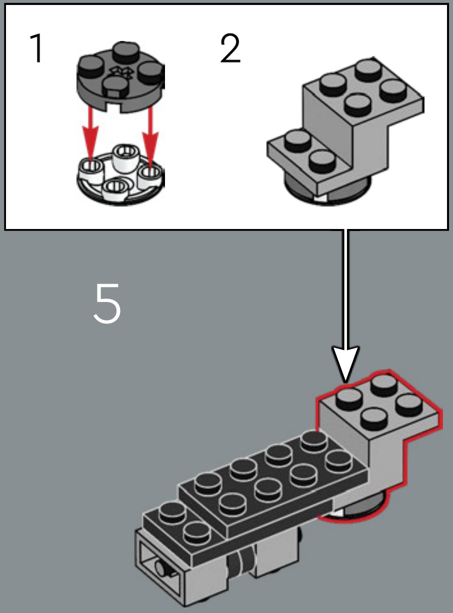

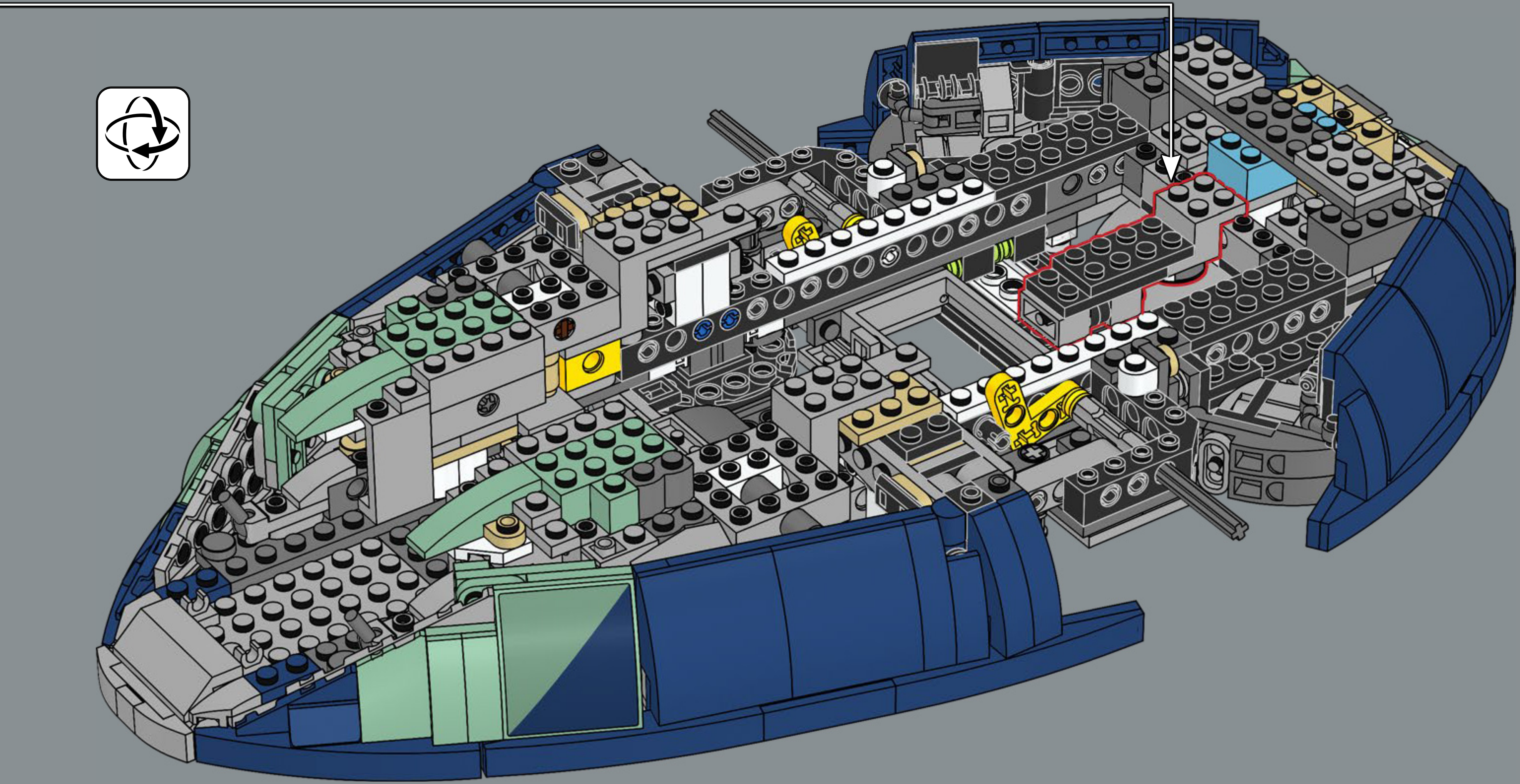

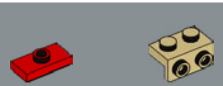

357

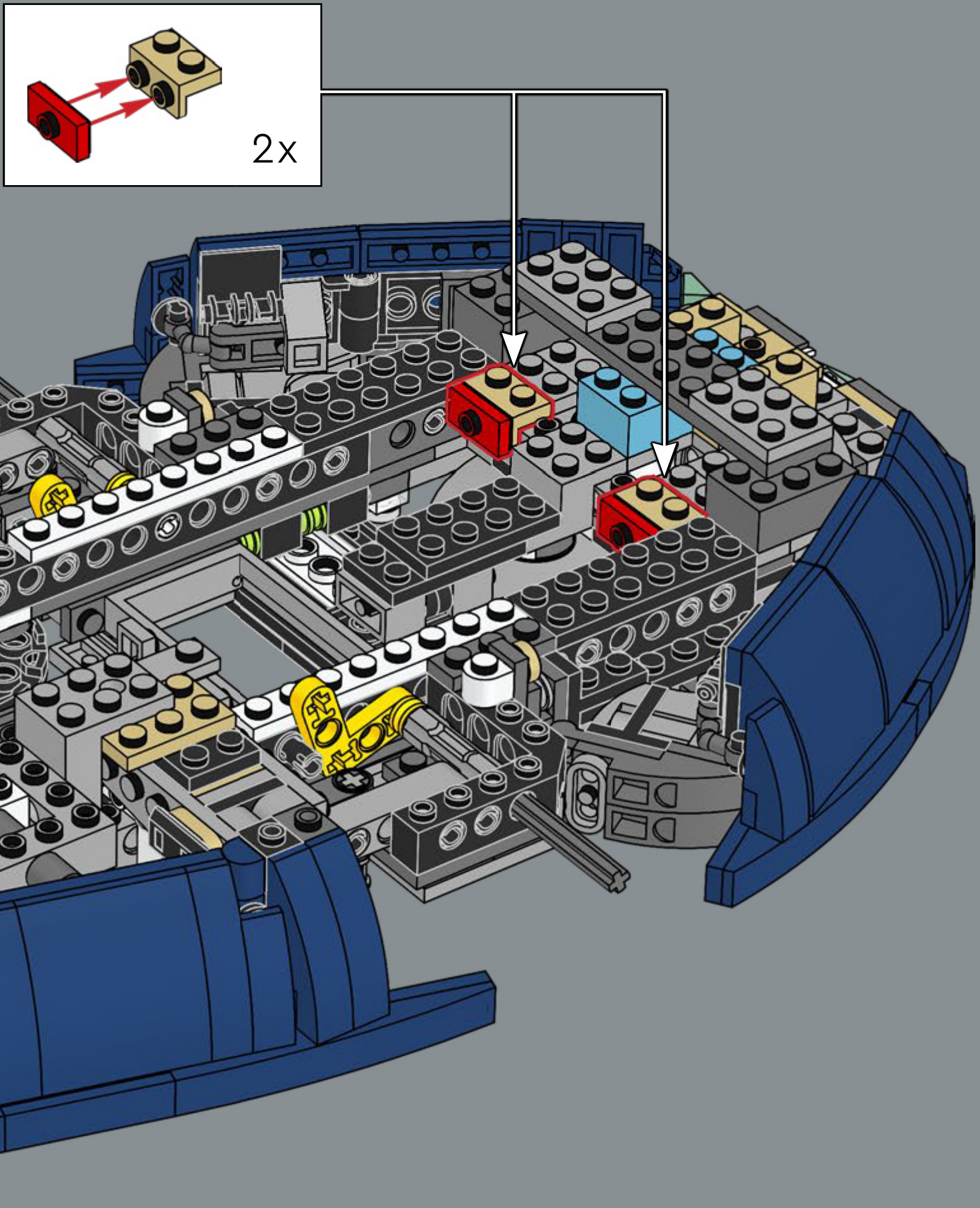

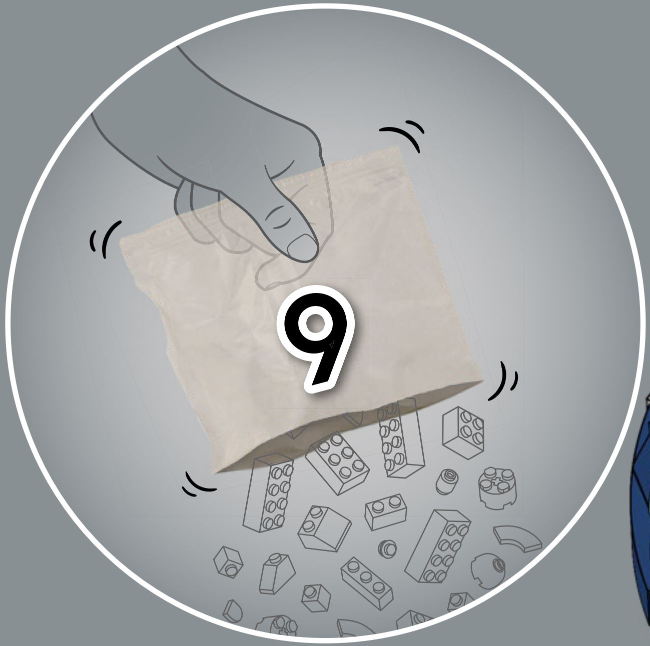

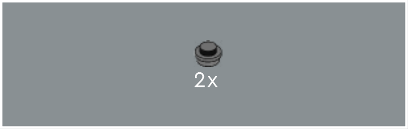

358

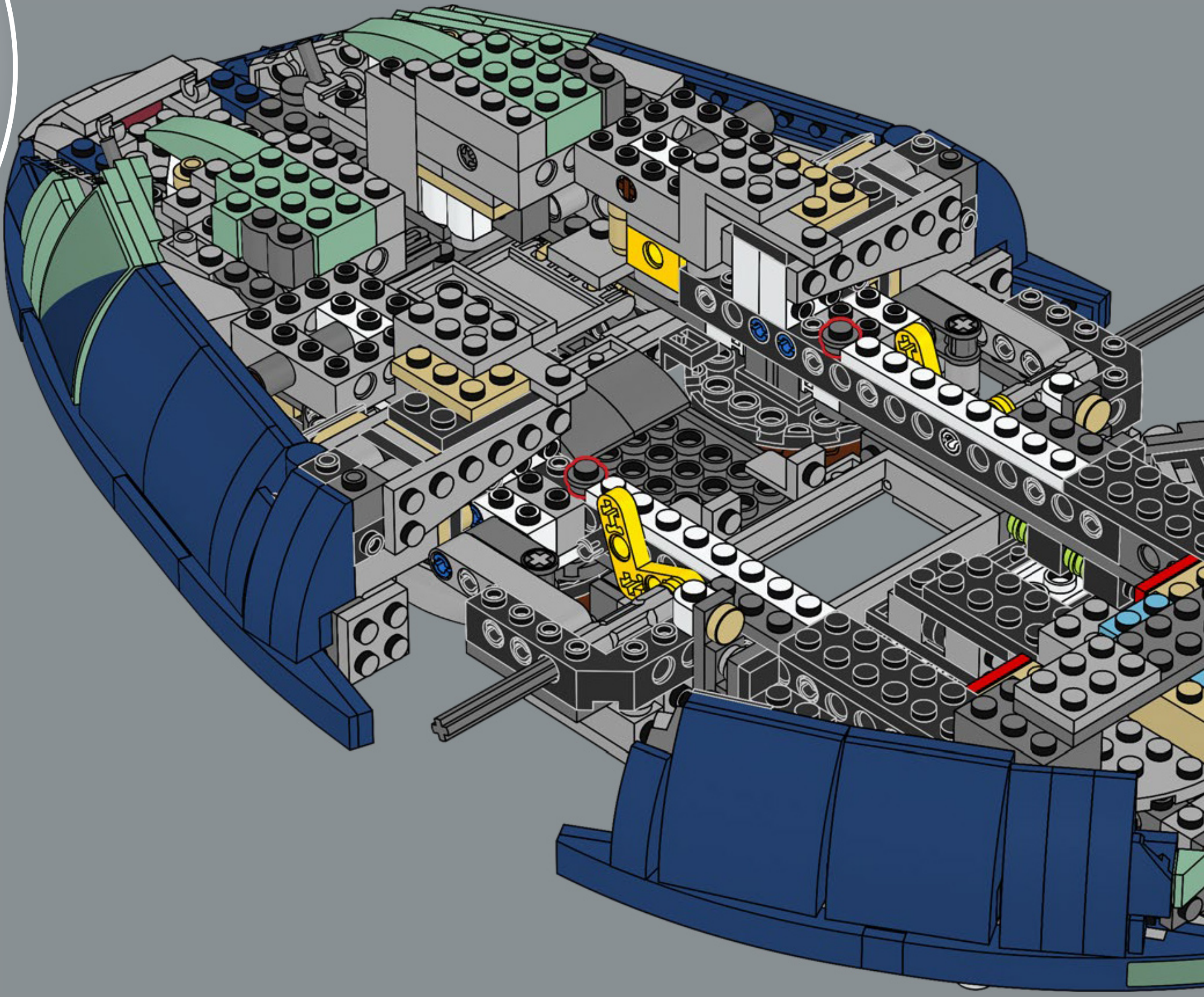

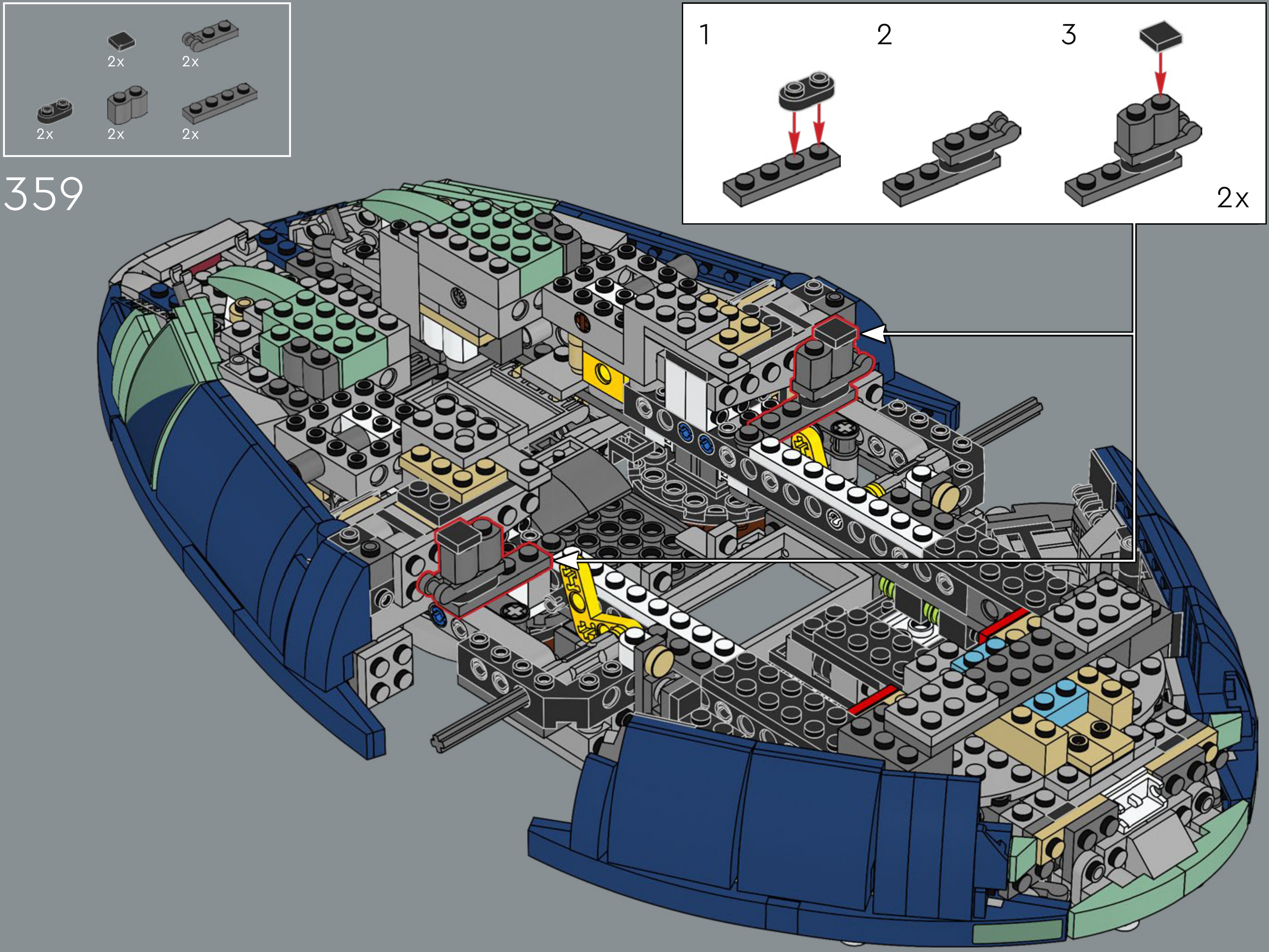
2x
2x
2x
2x
2x

359

1
2
3
2x

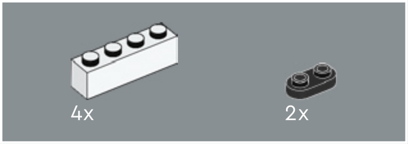

360

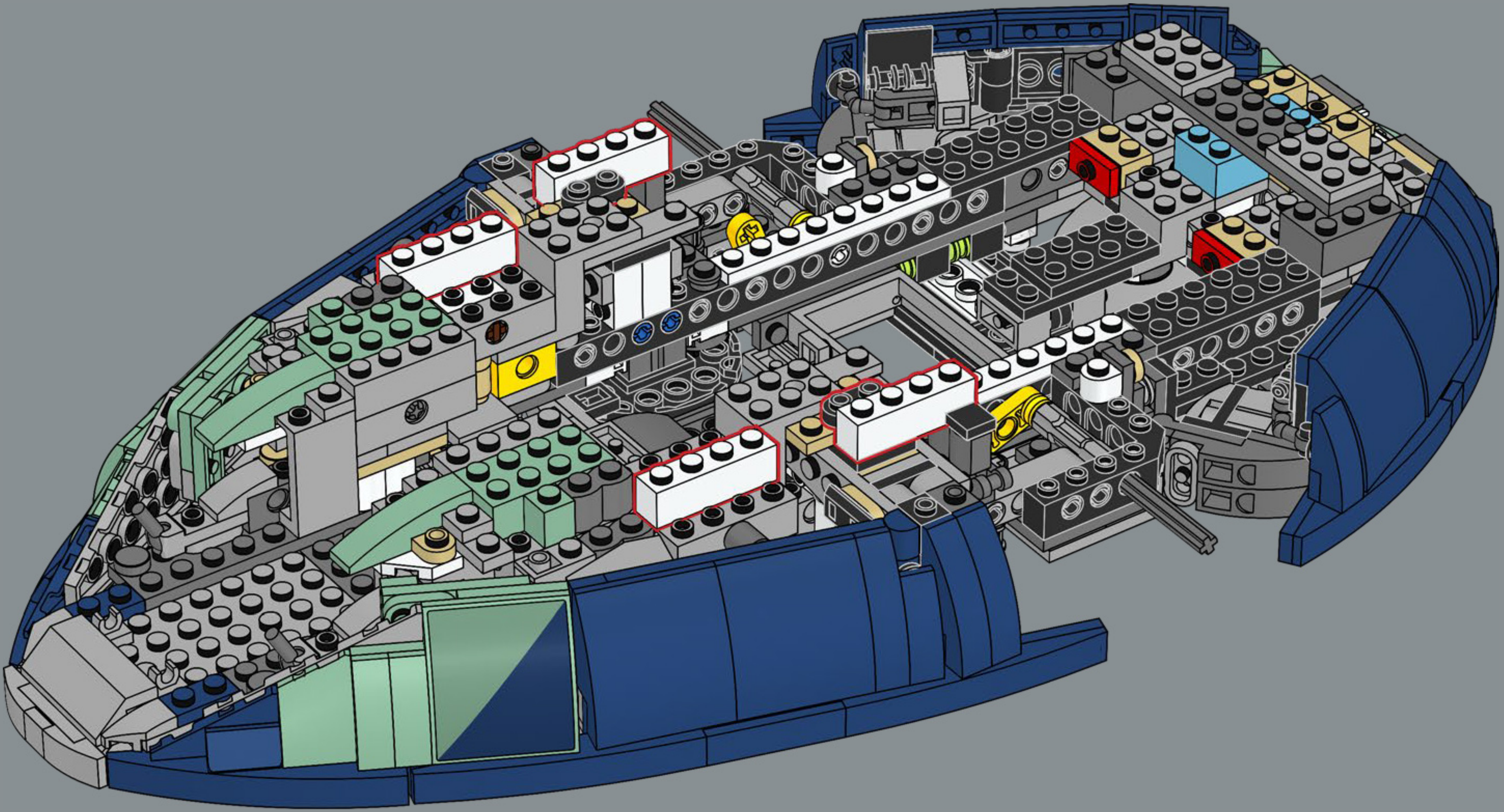

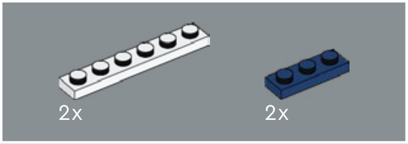

361

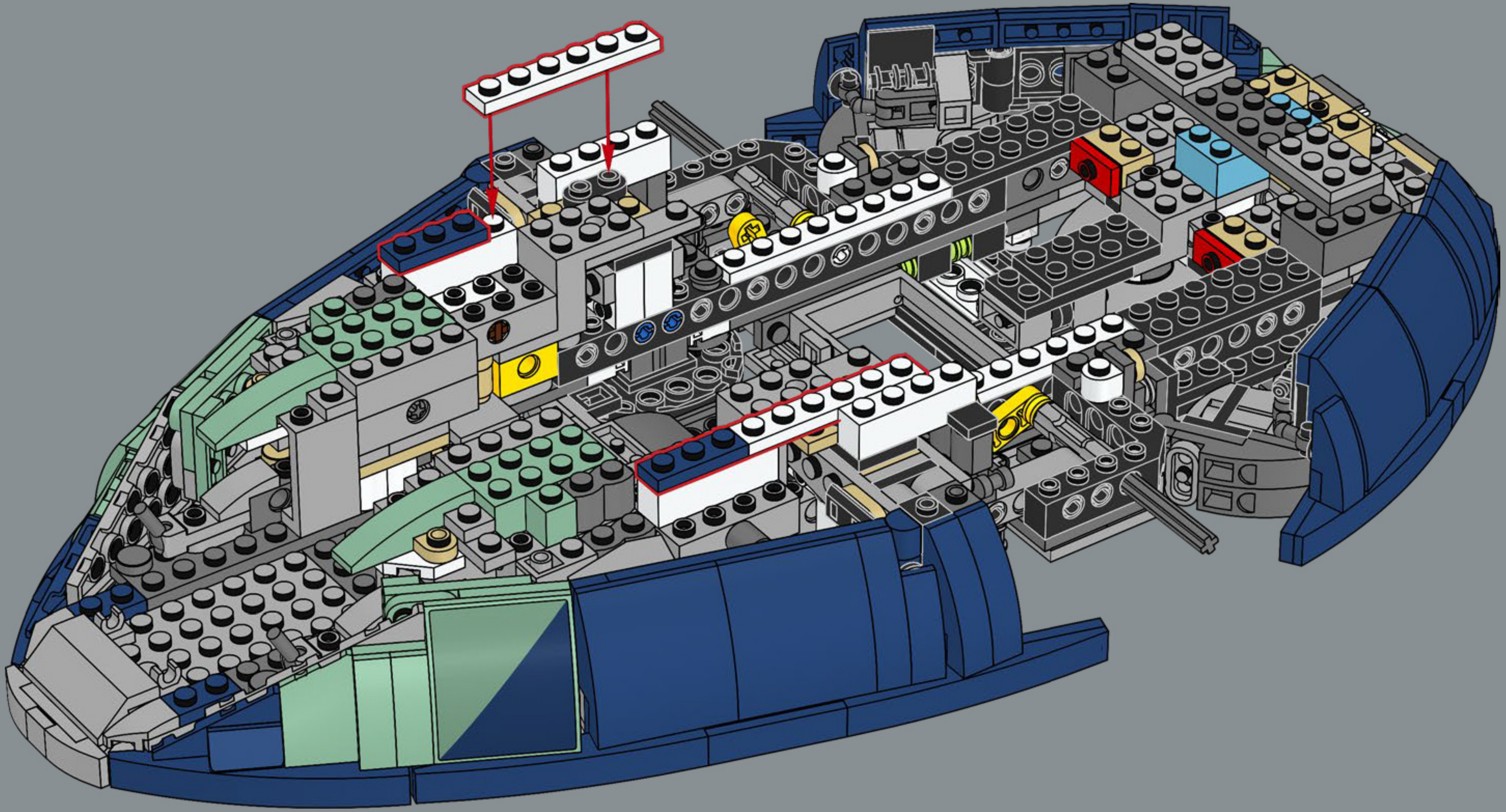

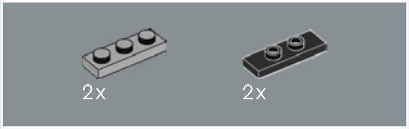

362

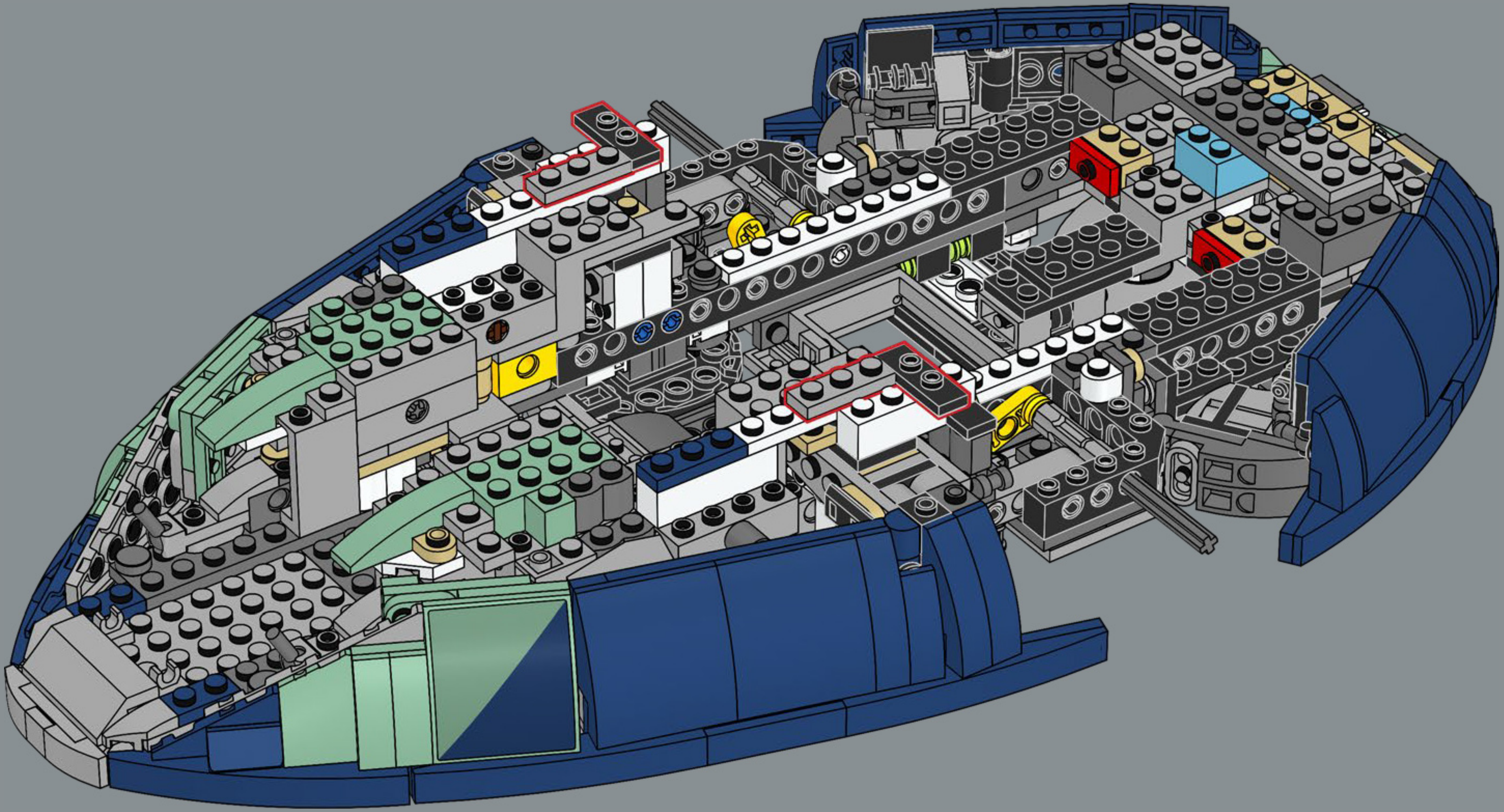

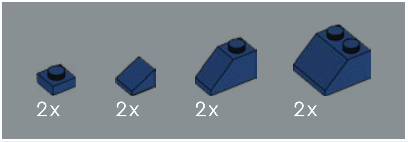

363

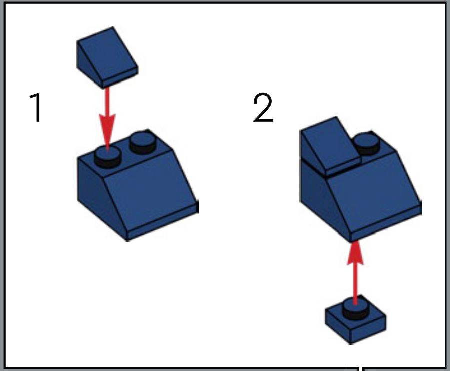

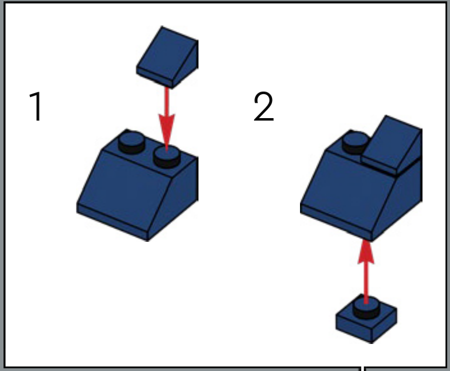

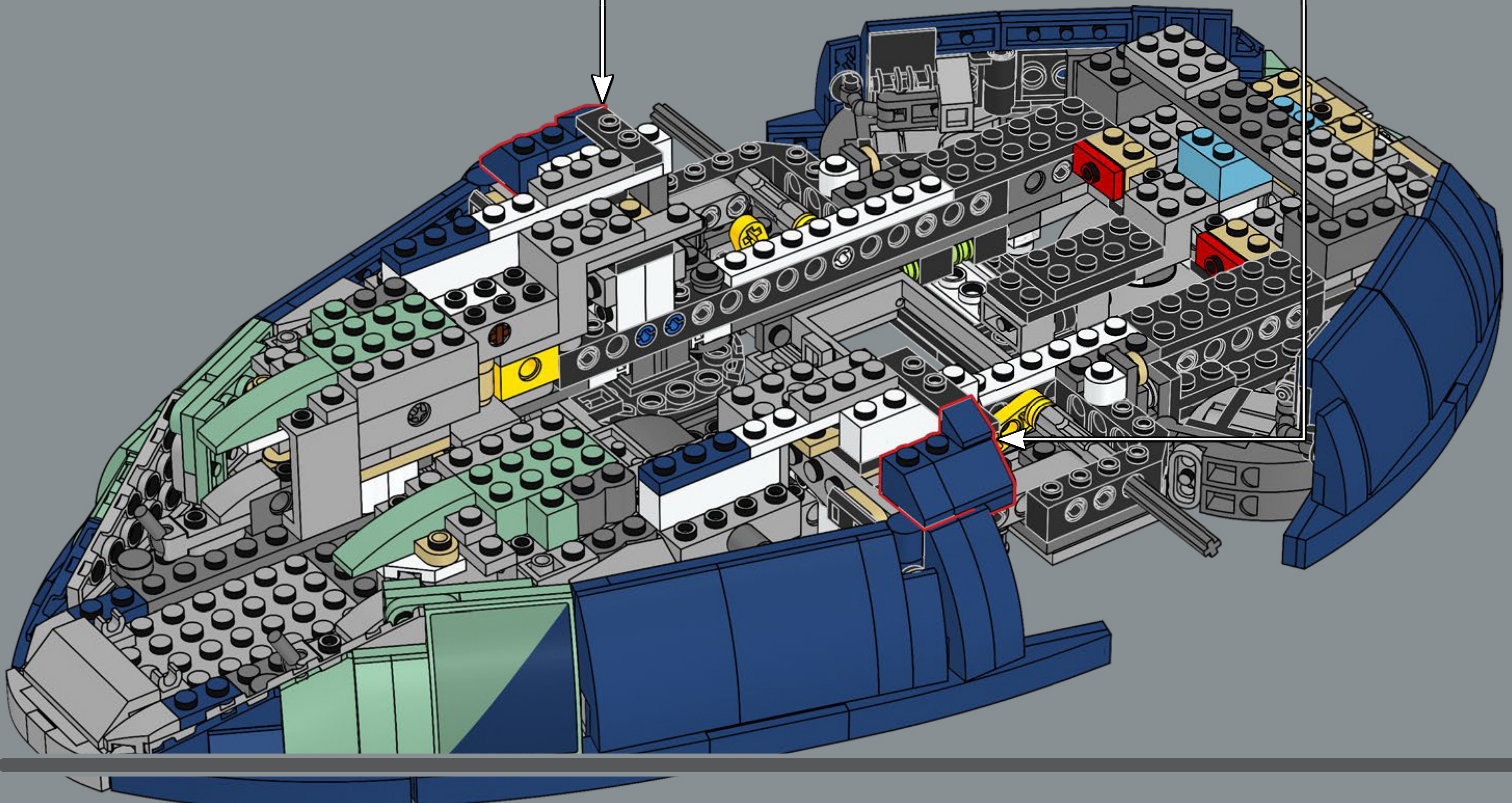

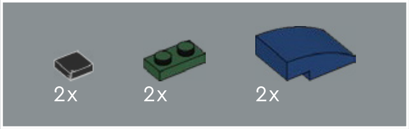

364

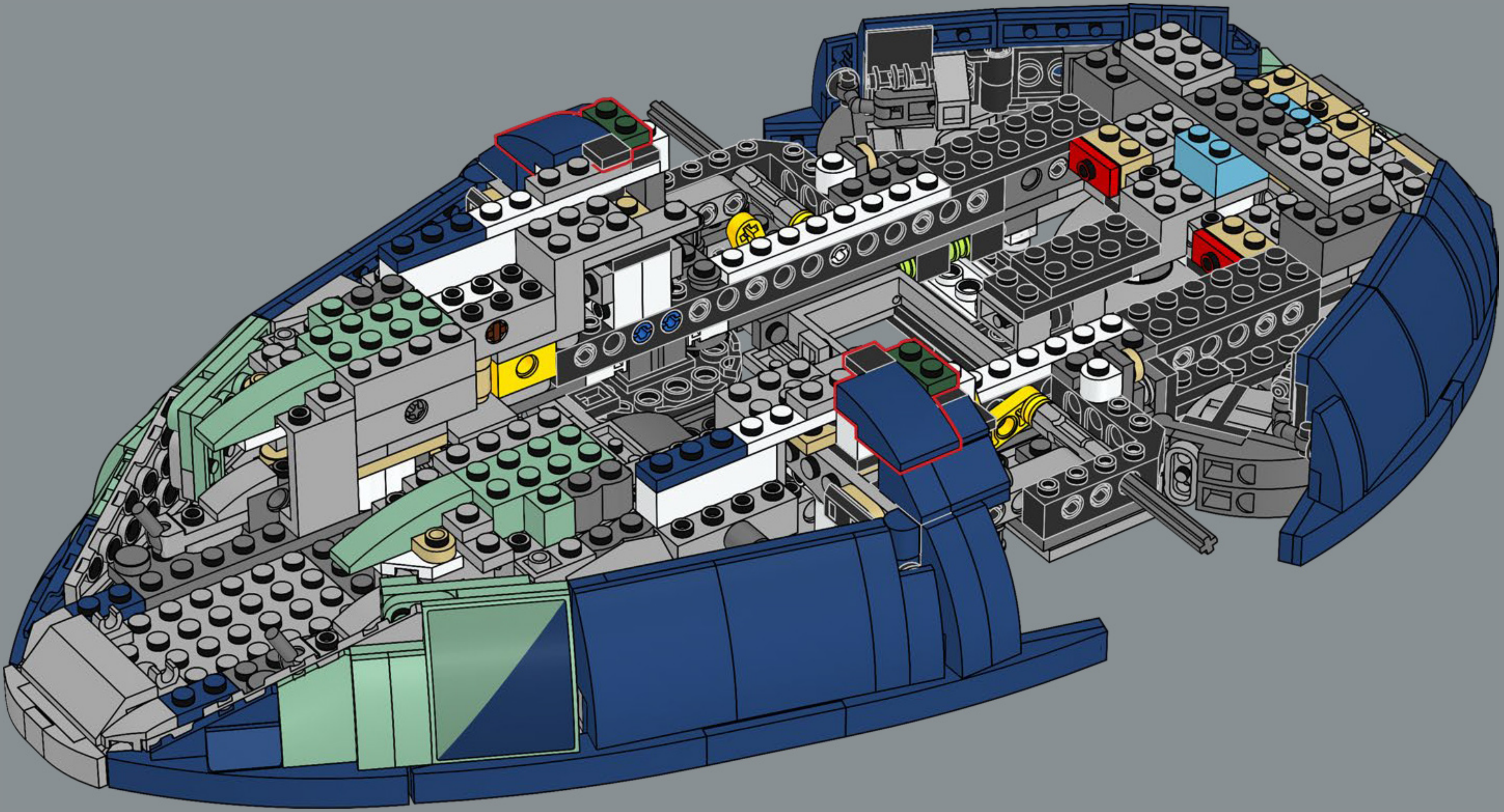

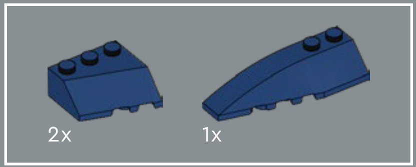

365

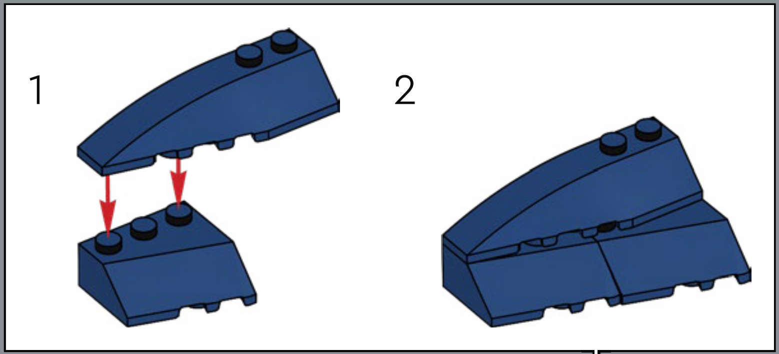

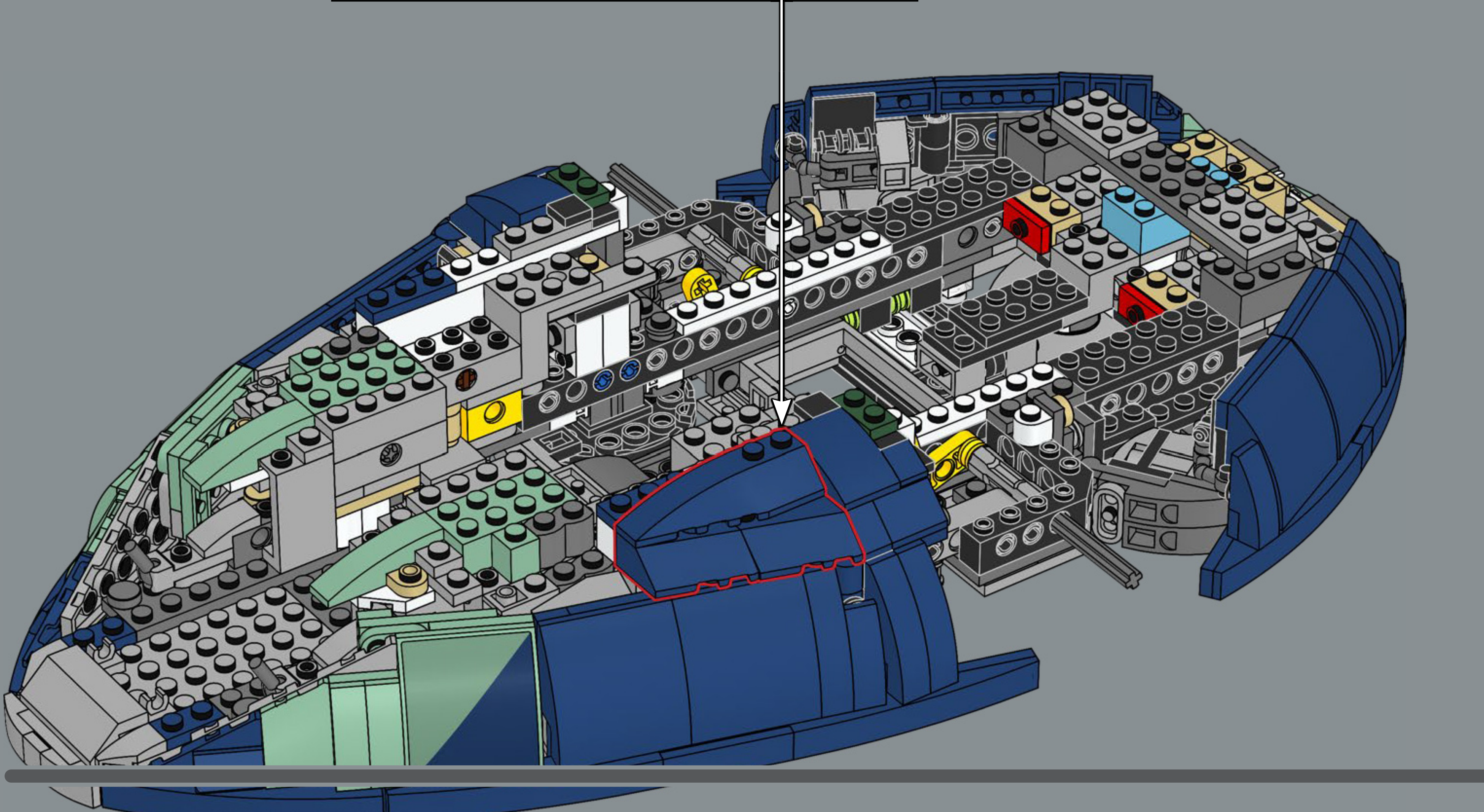

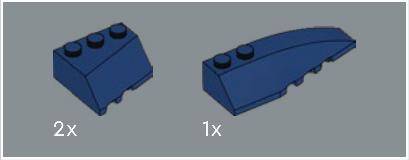

366

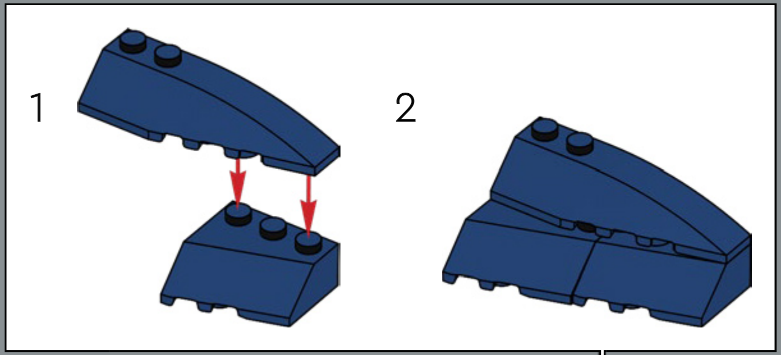

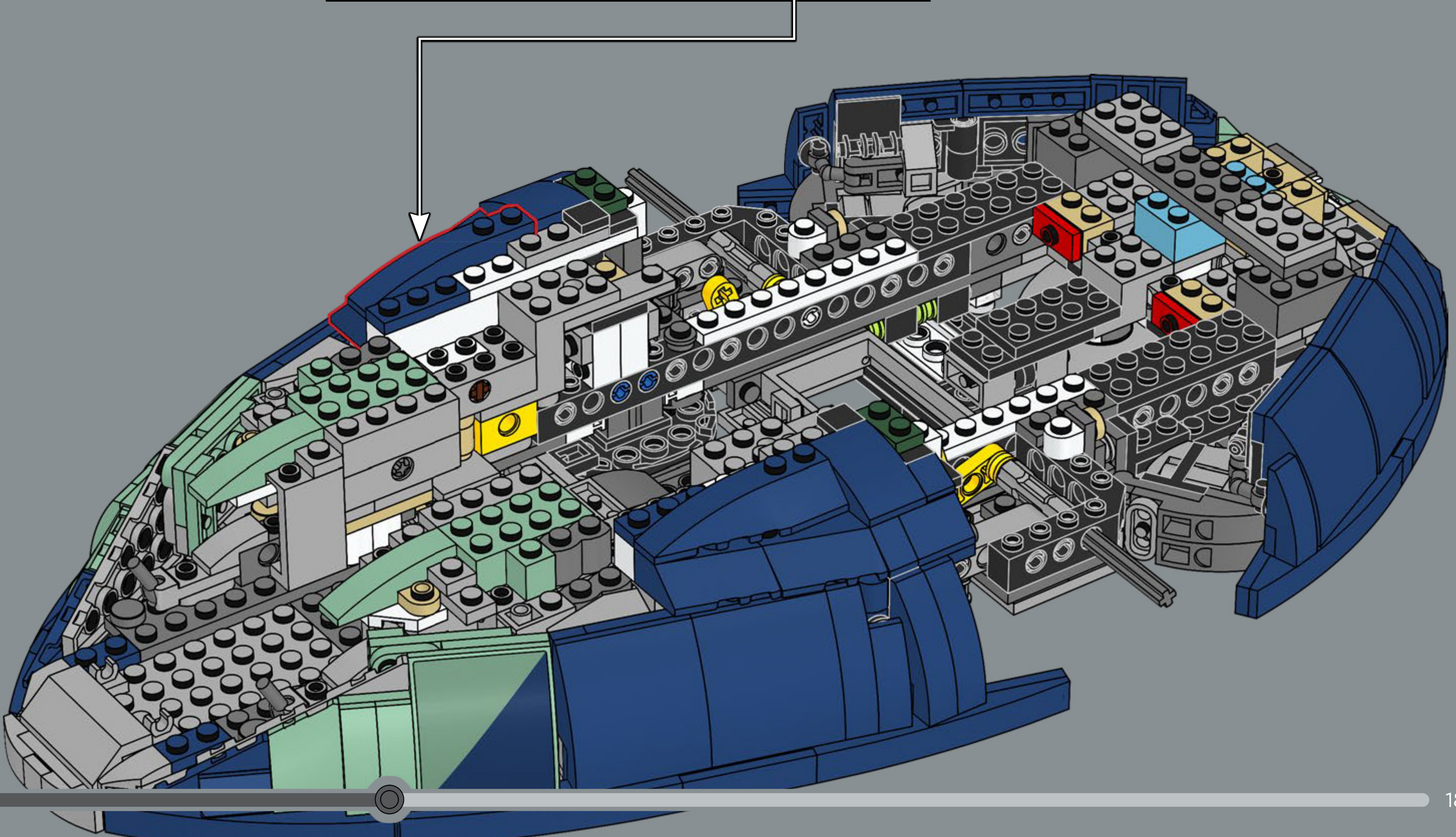

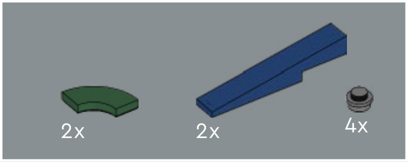

367

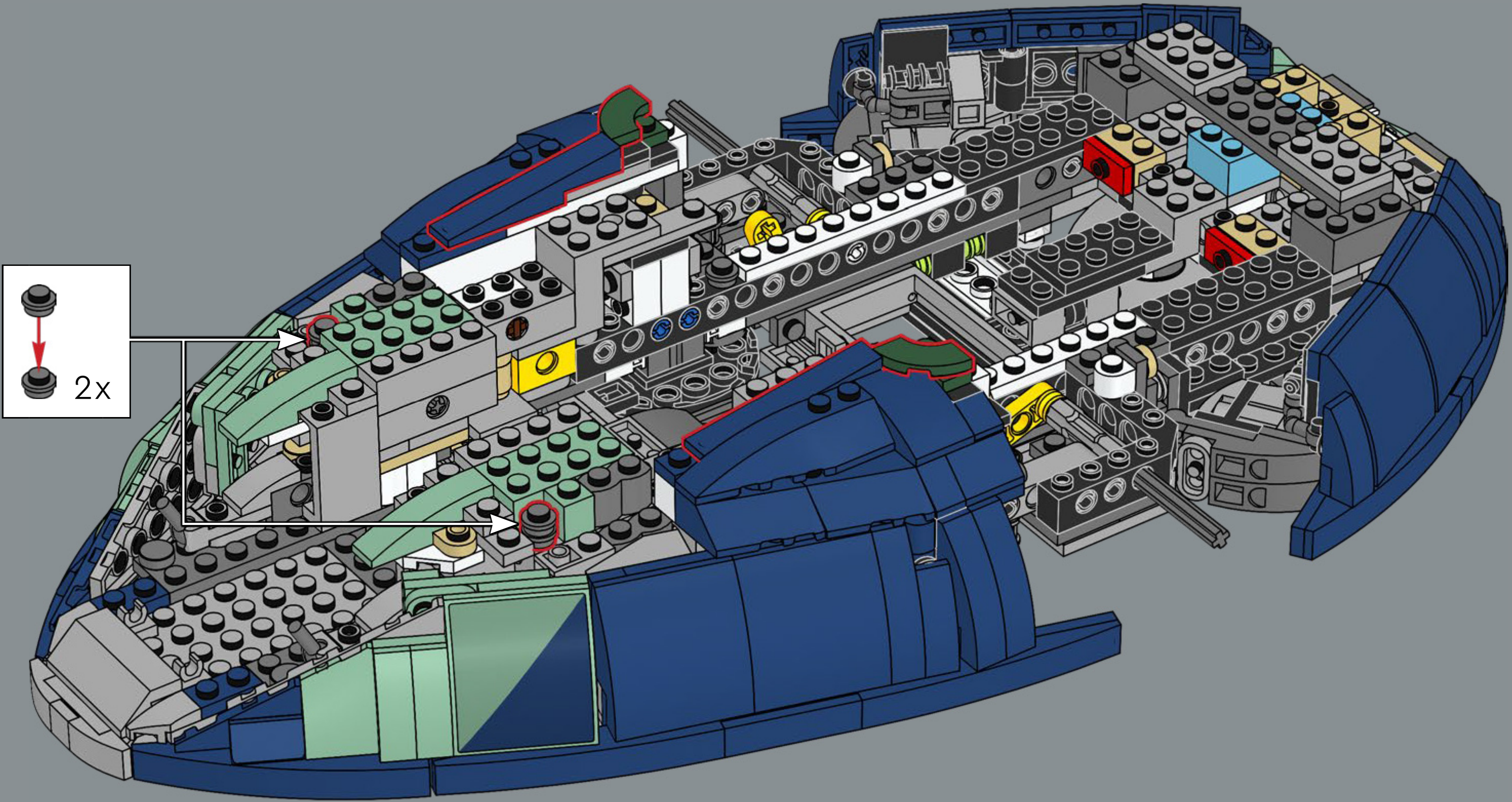

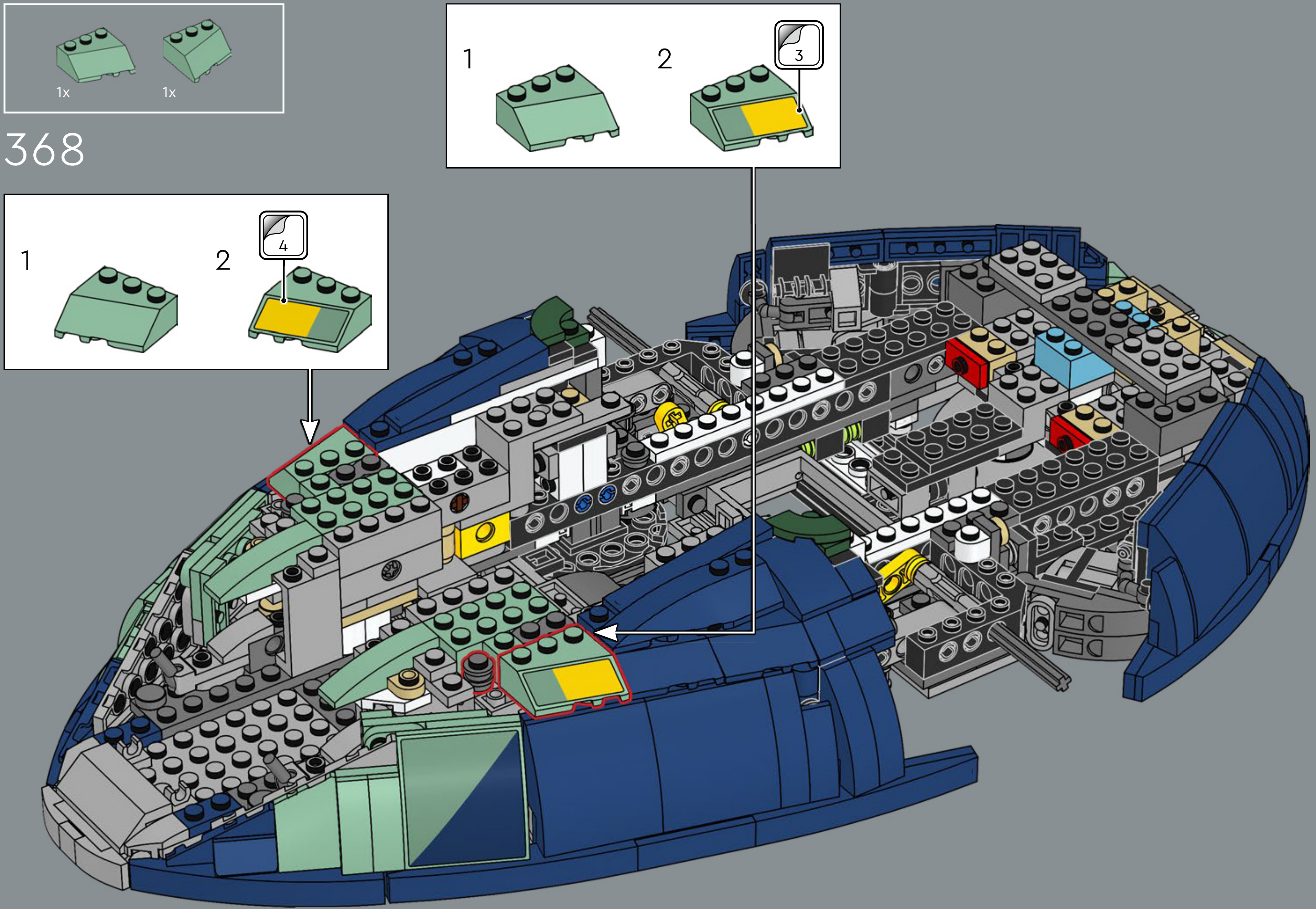
1x
1x
1
2
3
1
2
4

368

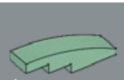

369

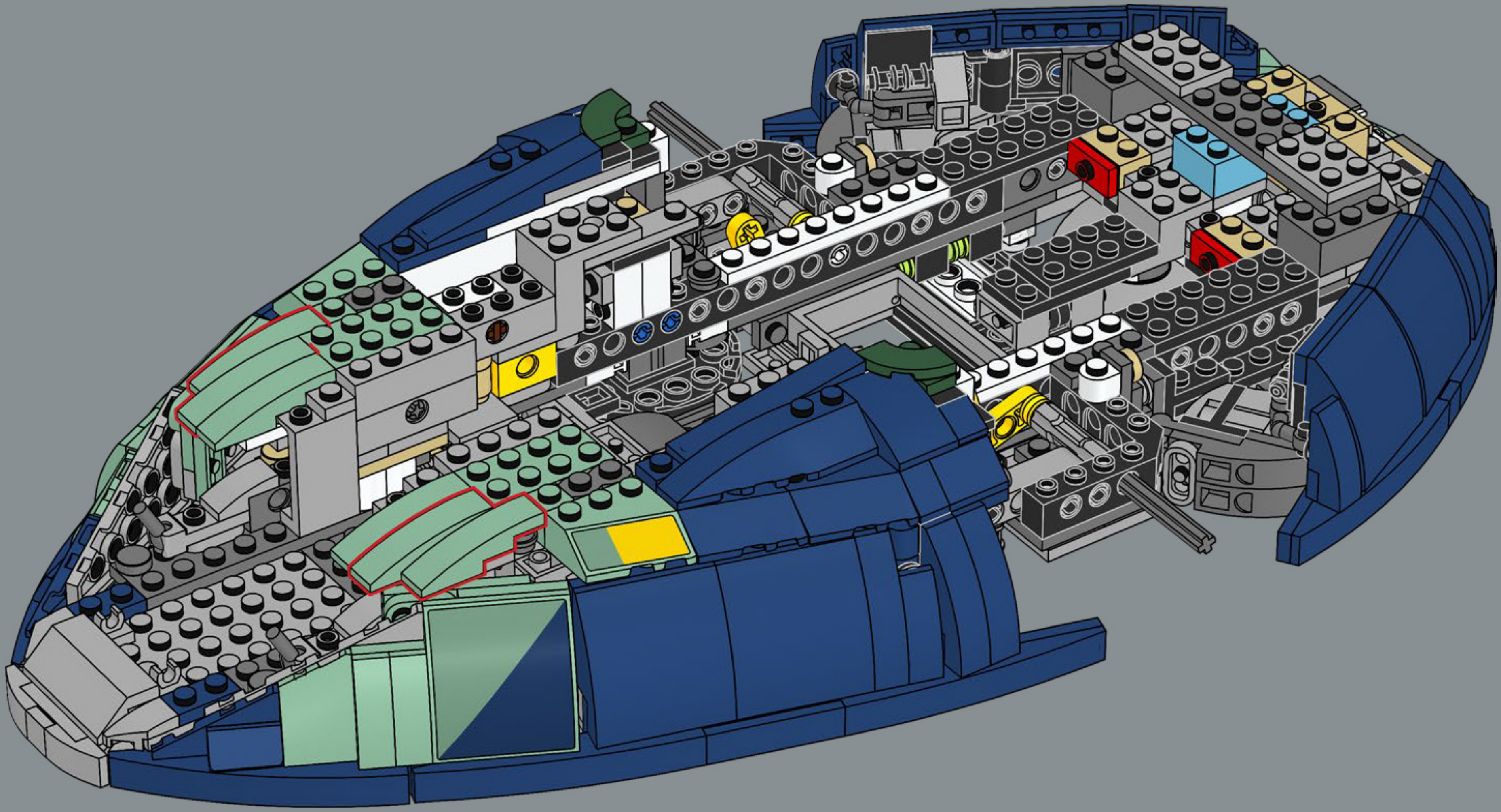

370

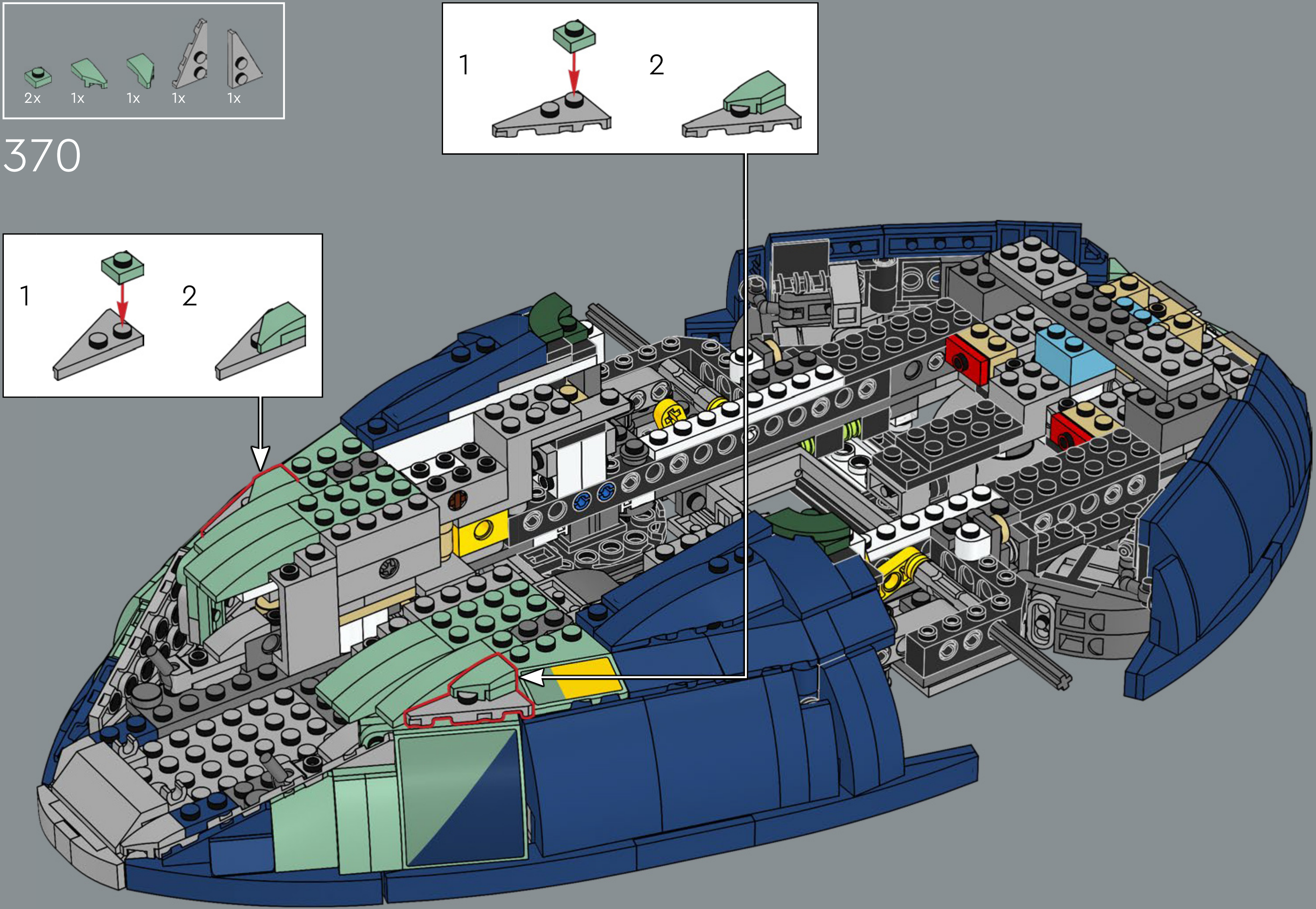
2x
1x
1x
1x
1x
1
2
1
2

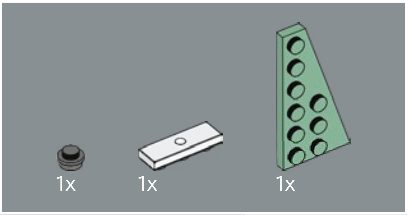

371

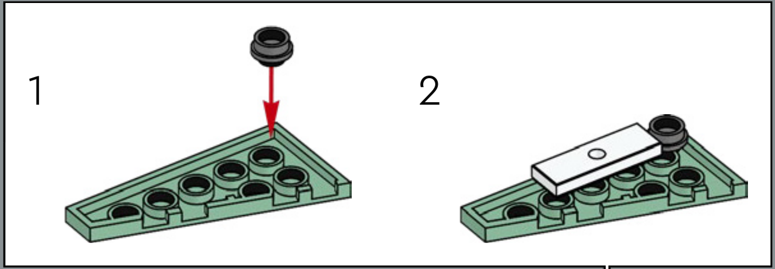

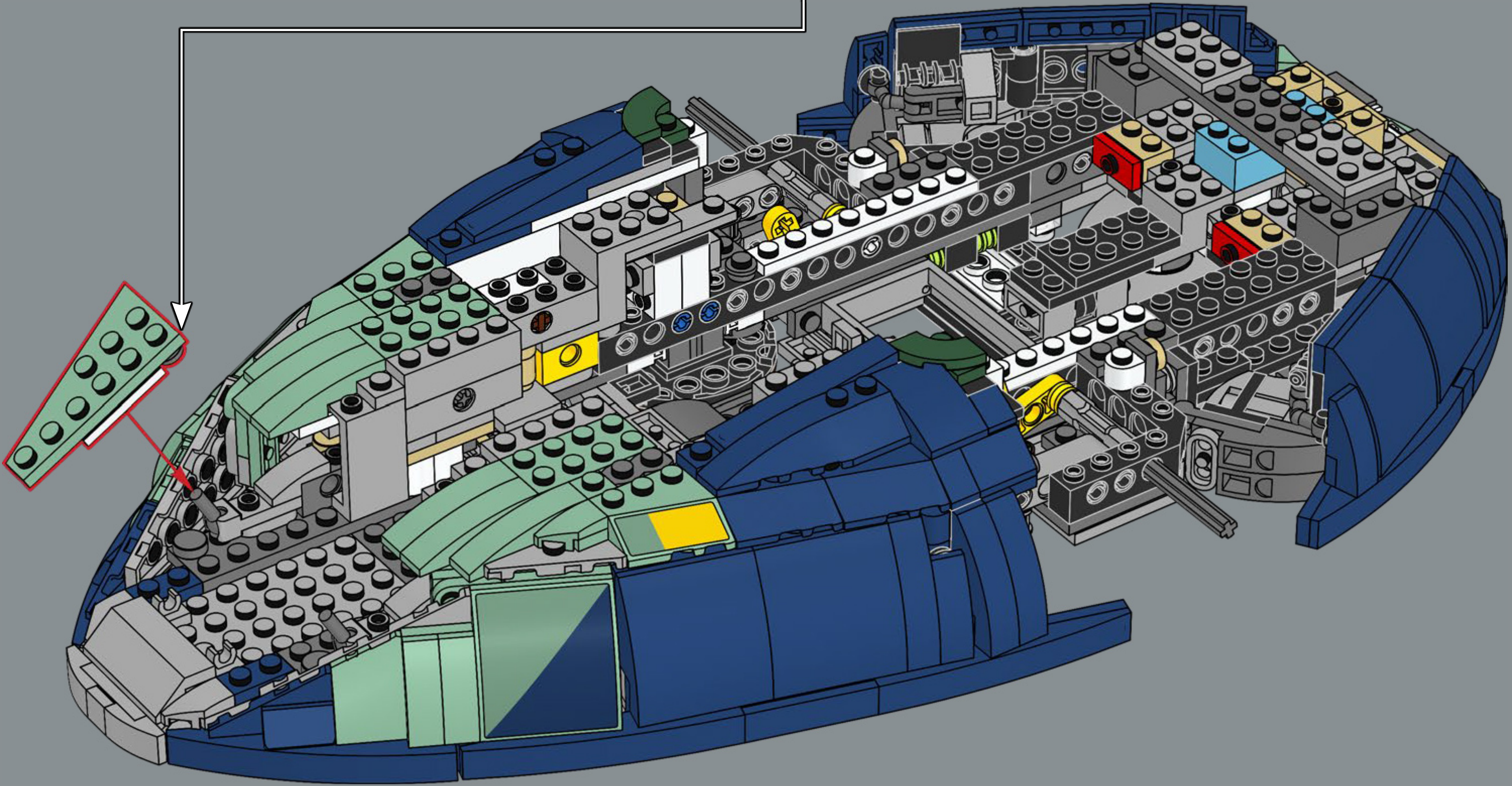

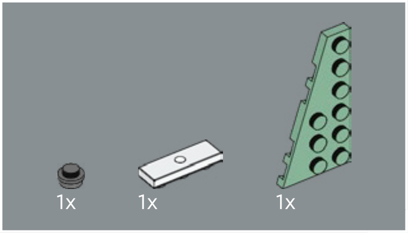

372

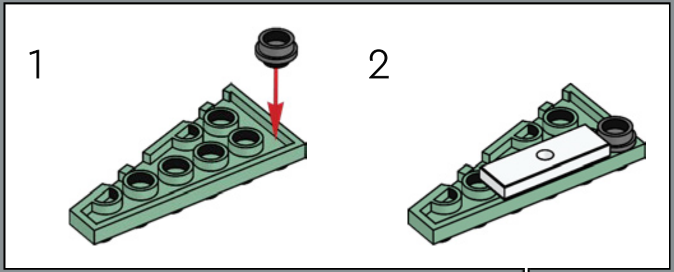

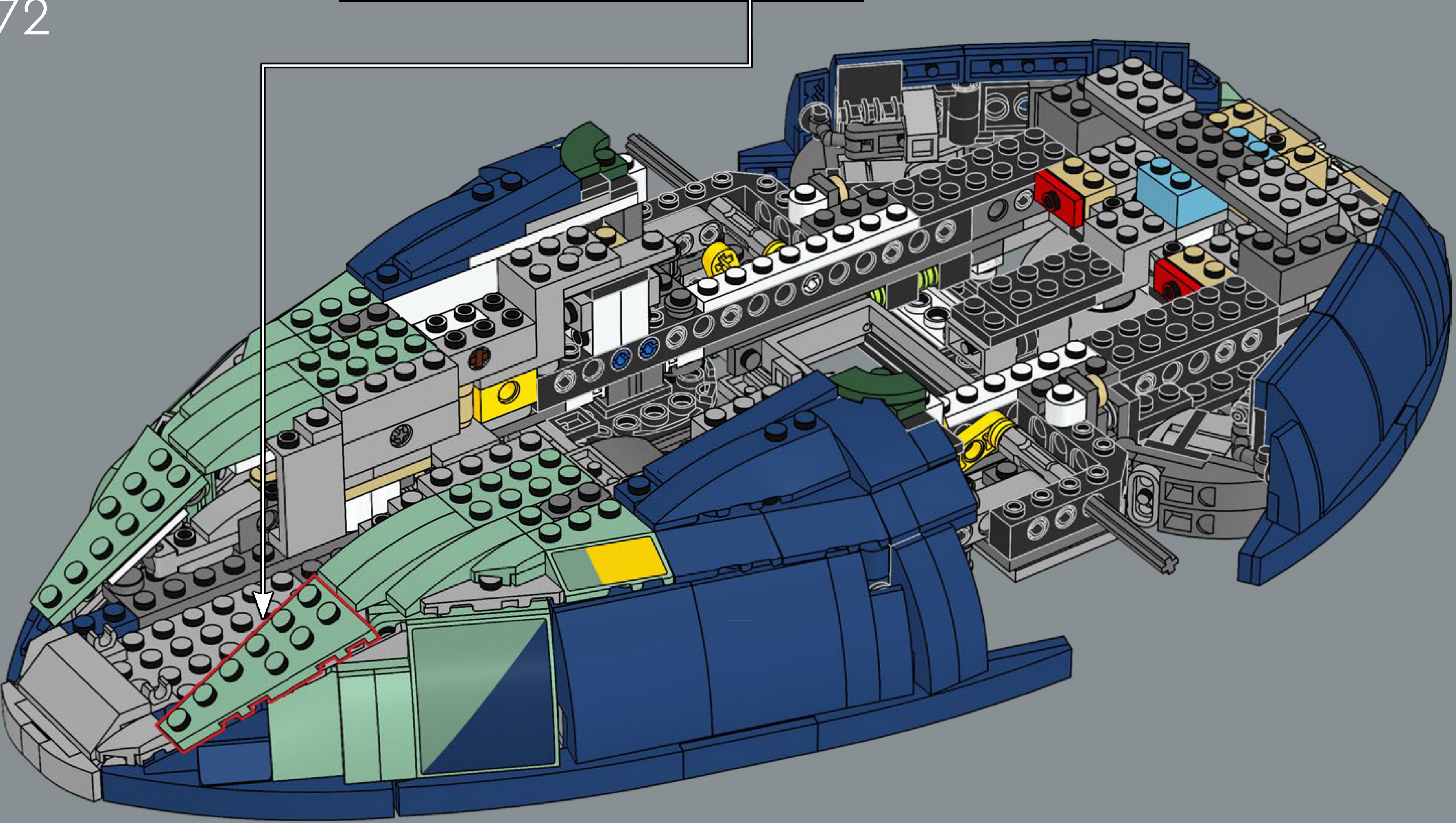

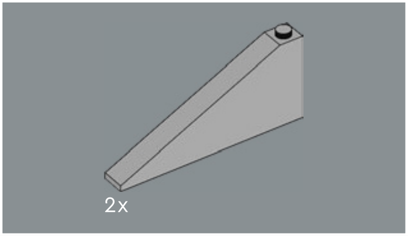

373

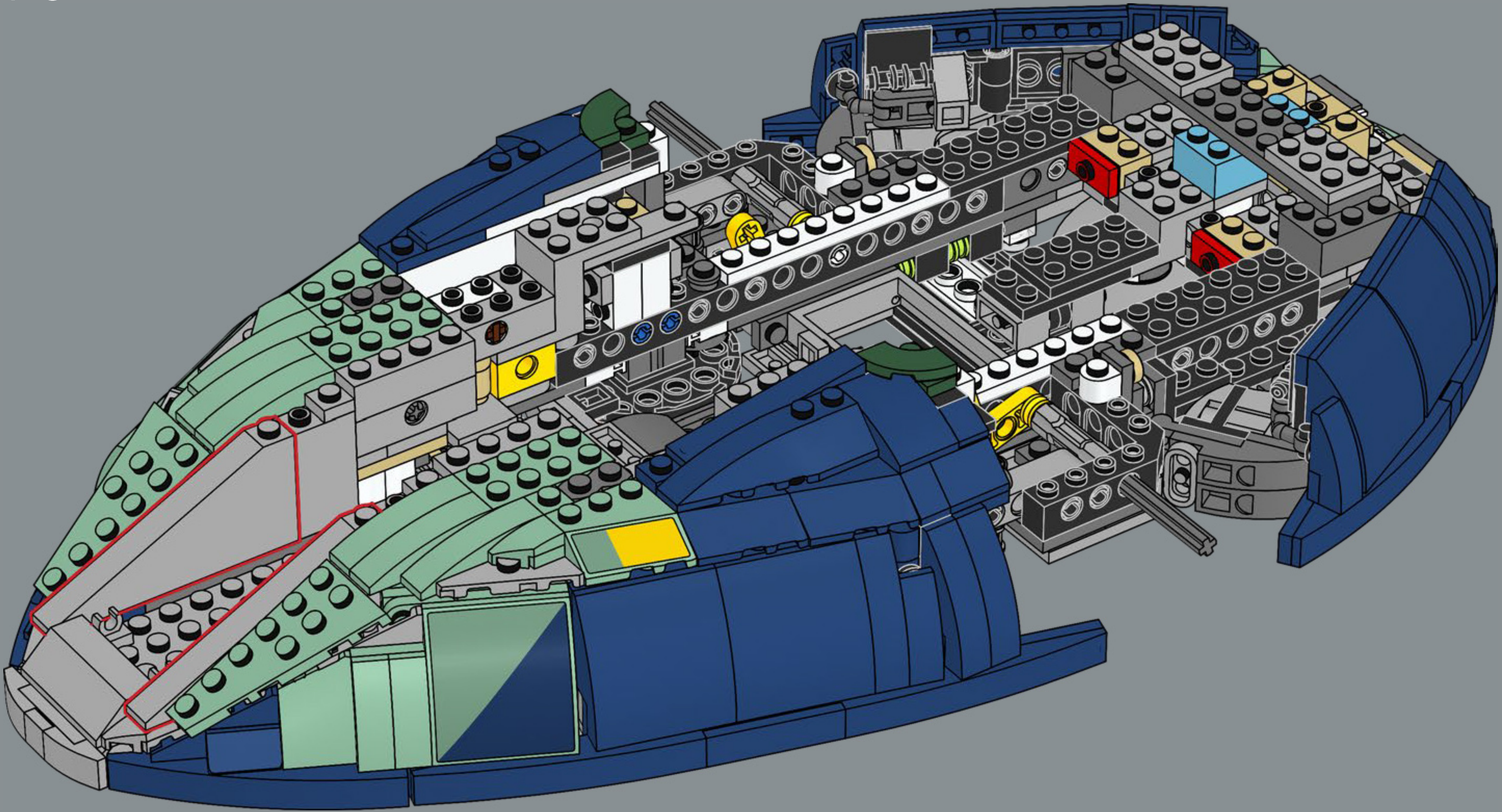

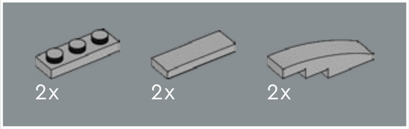

374

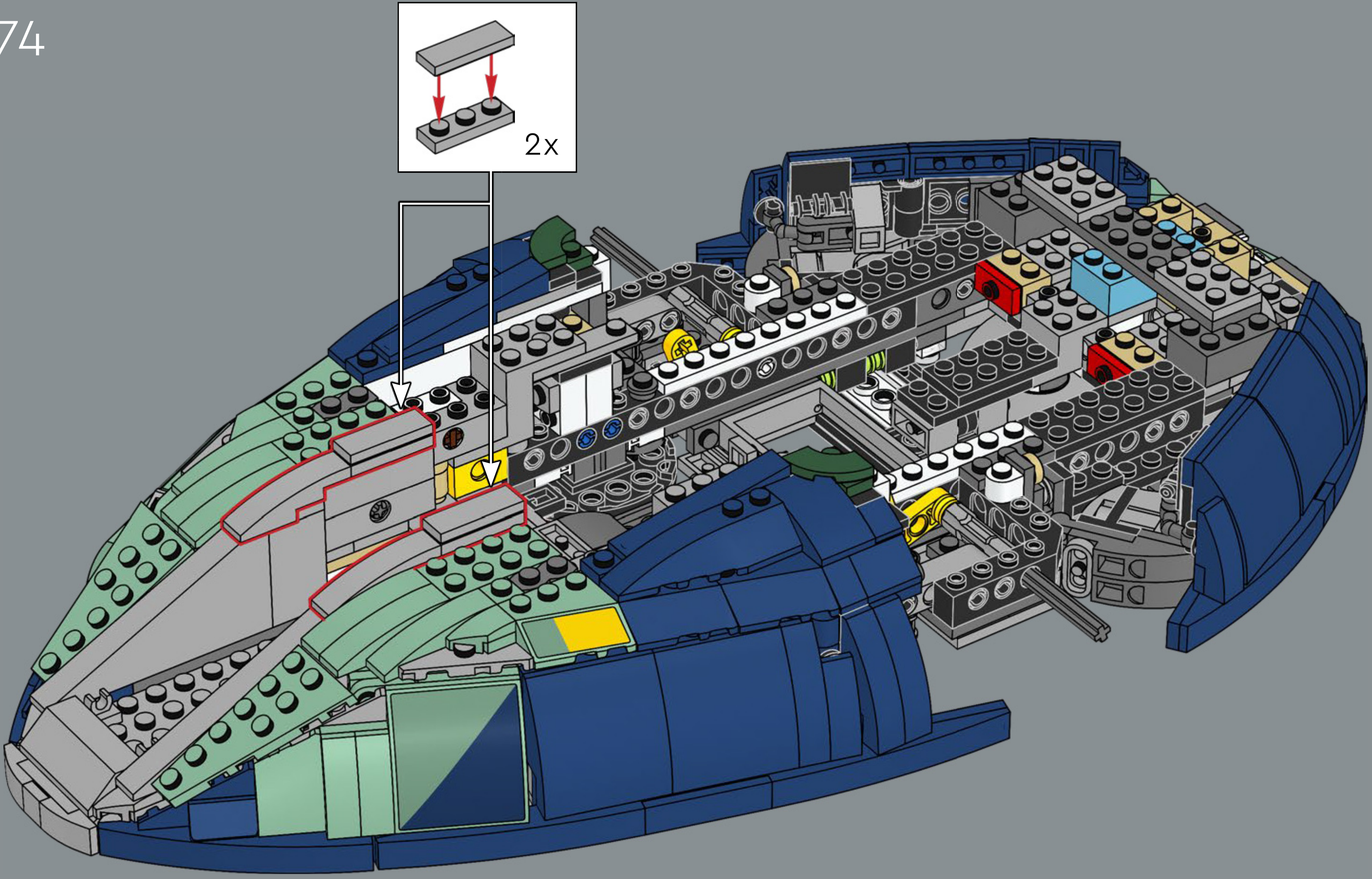

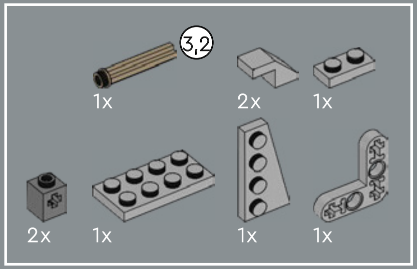
3,2
1x
2x
1x
2x
1x
1x
1x

375

1

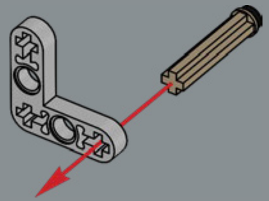

2

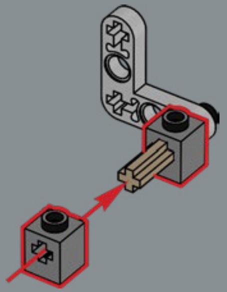

3

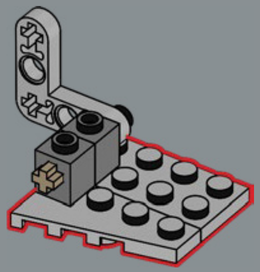

4

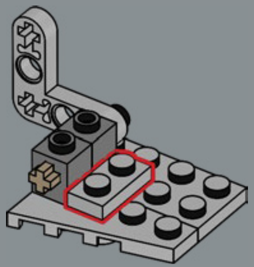

5

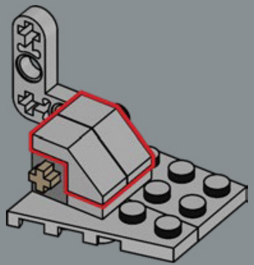

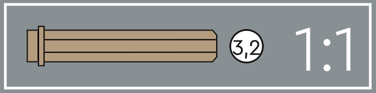

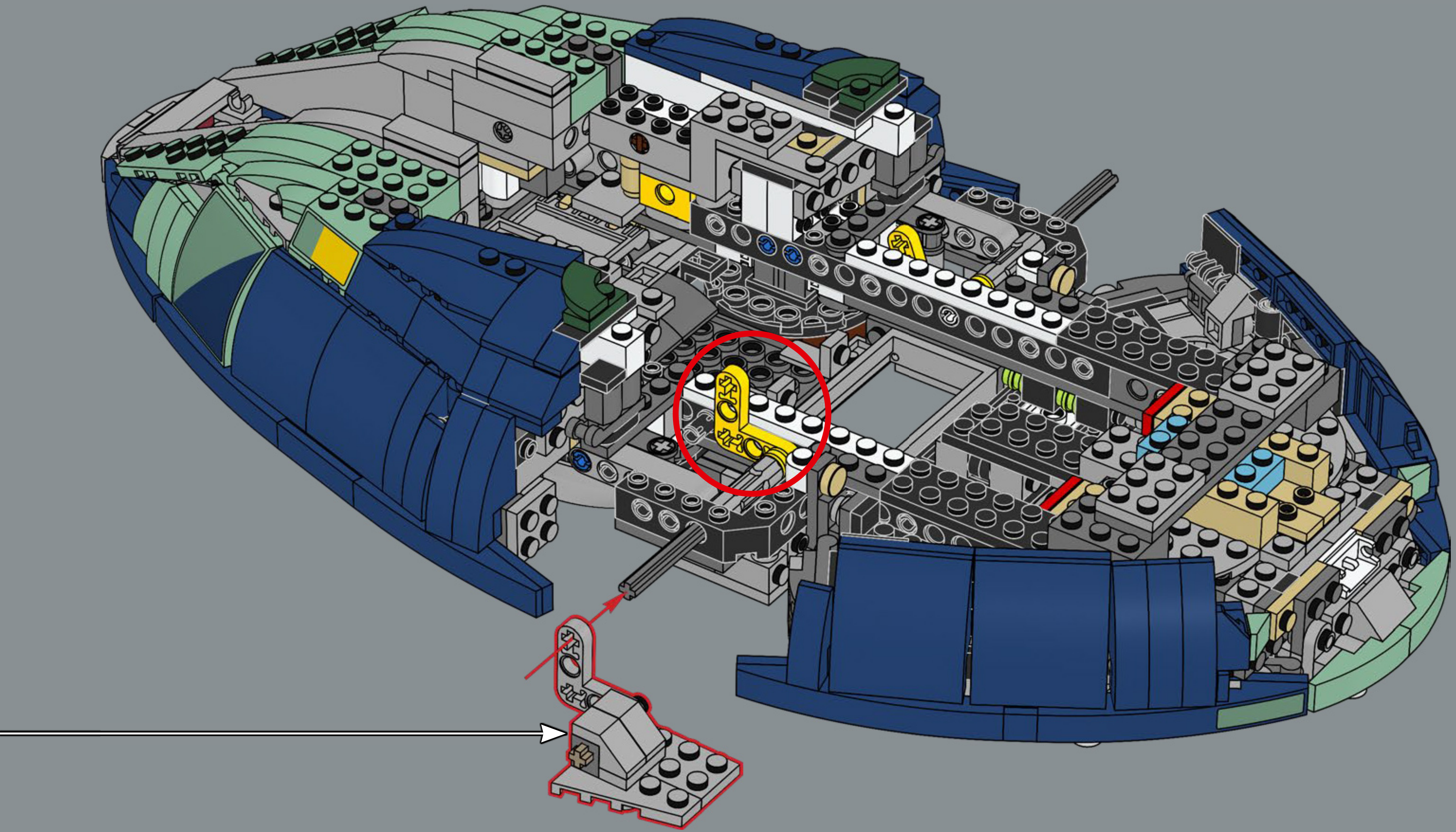

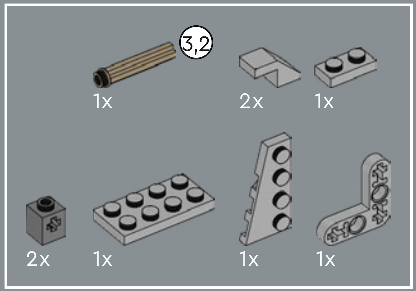
3,2
1x
2x
1x
2x
1x
1x
1x

376

1

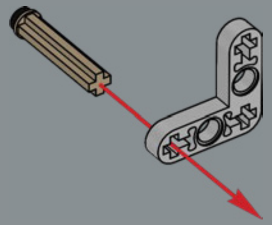

2

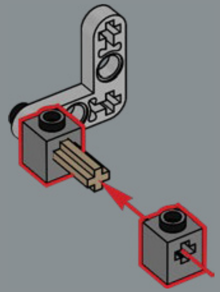

3

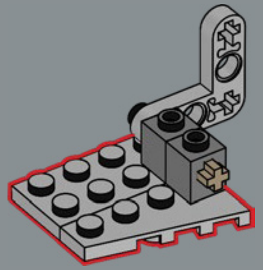

4

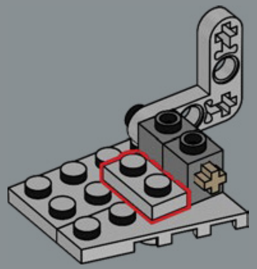

5

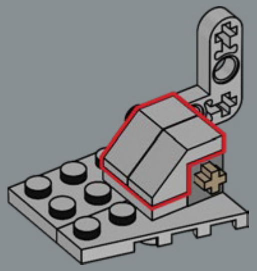

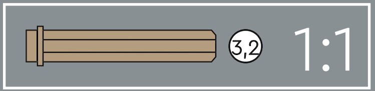

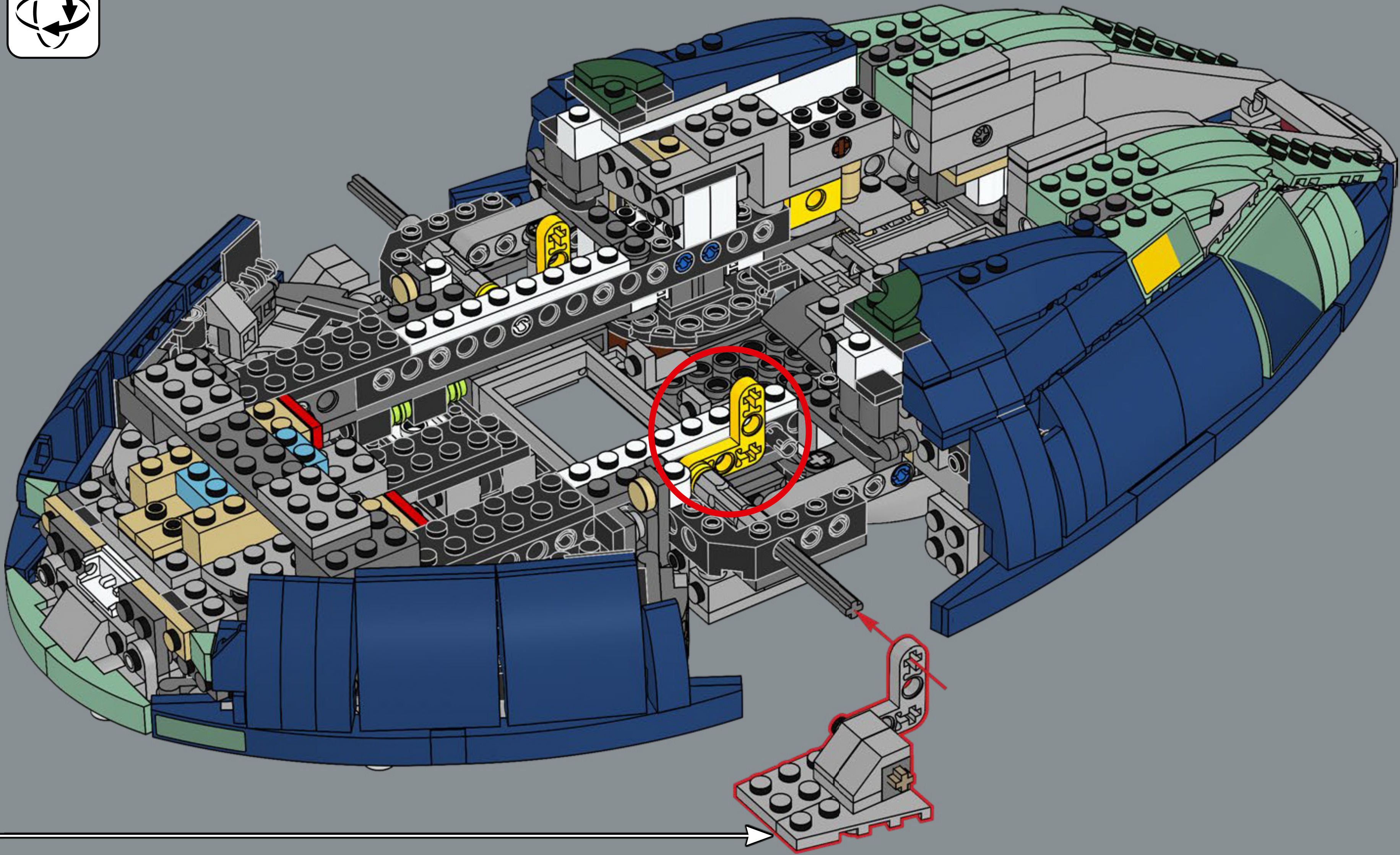

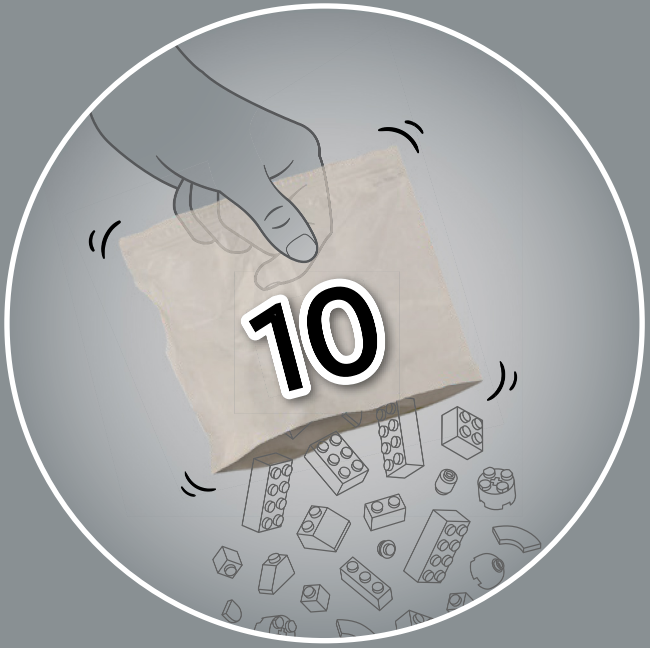

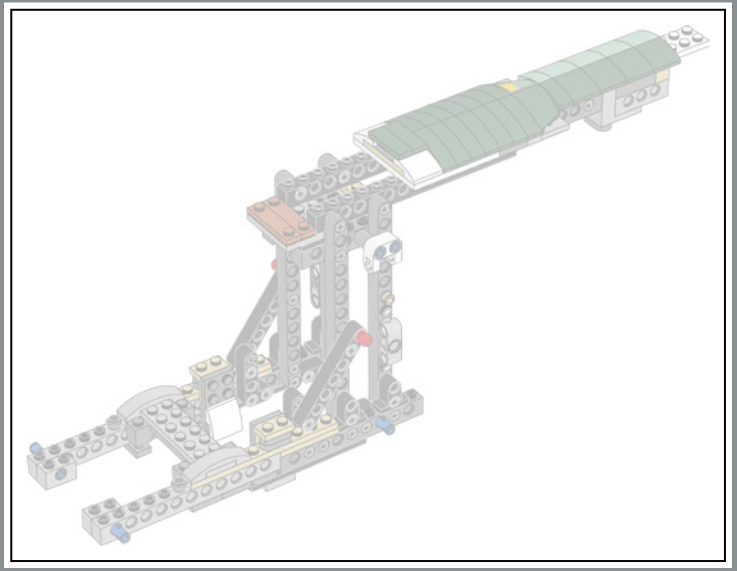

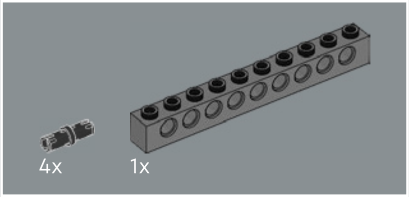

377

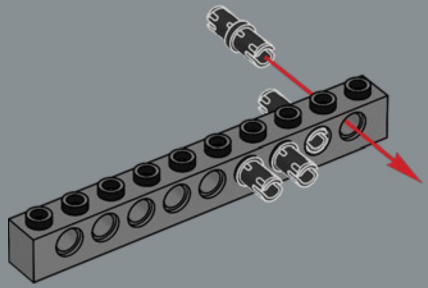

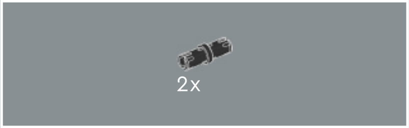

378

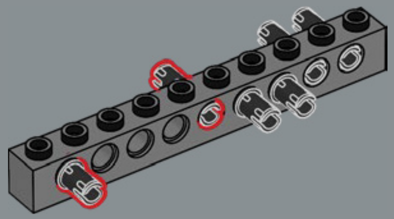

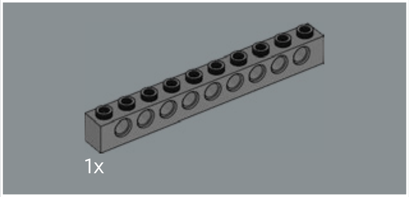

379

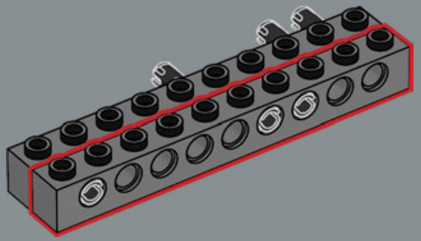

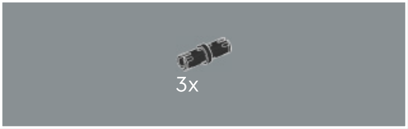

380

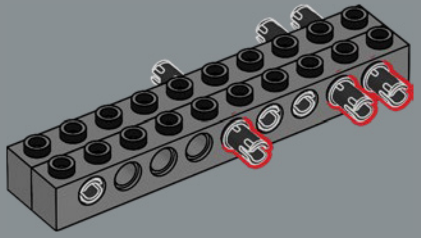

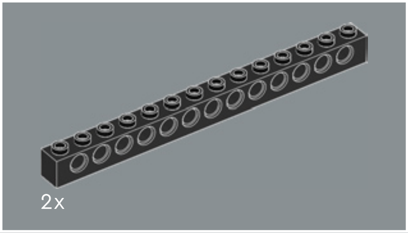

381

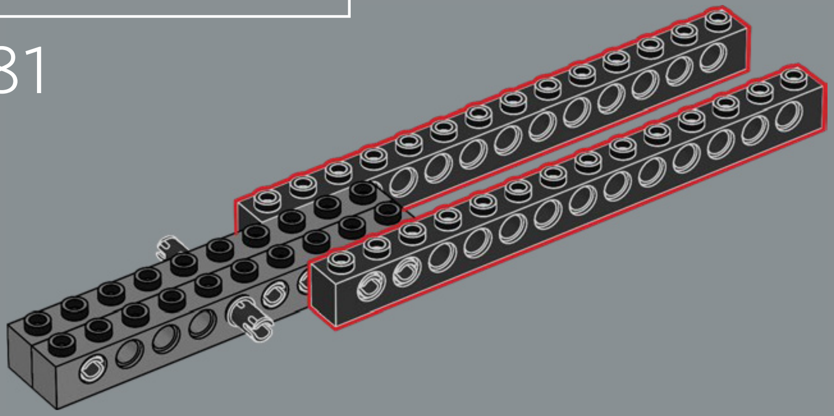

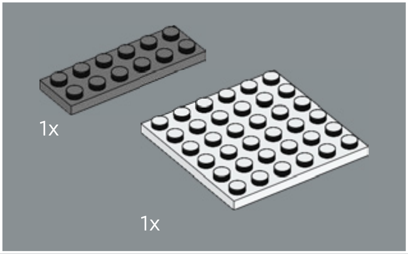

382

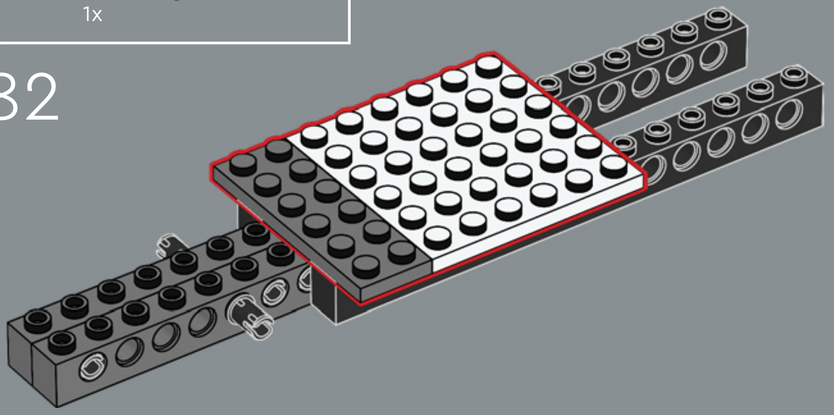

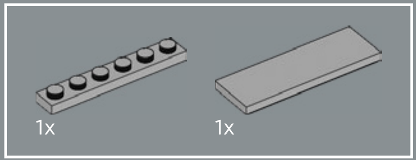

383

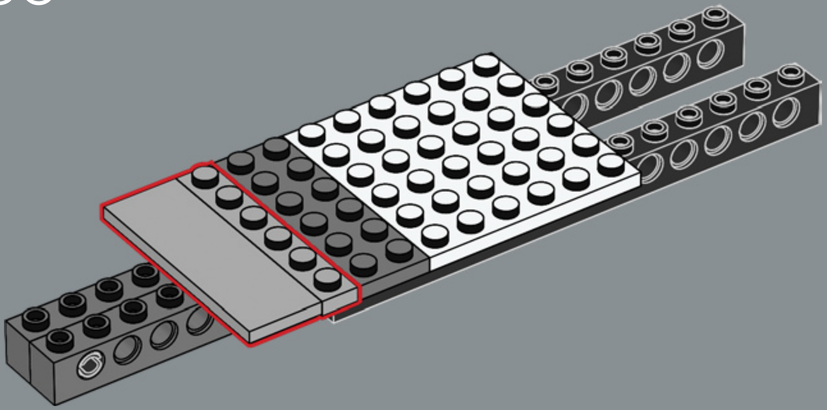

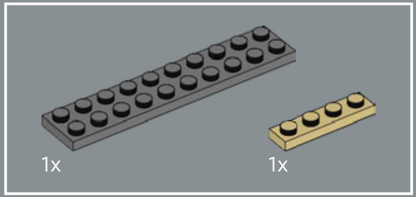

384

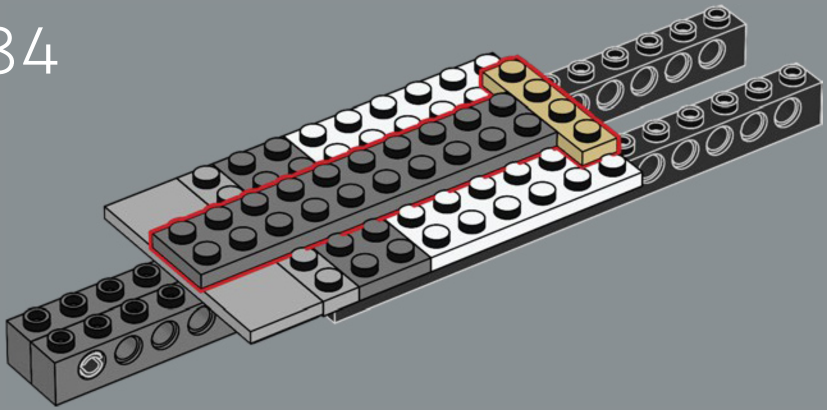

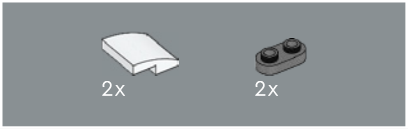

385

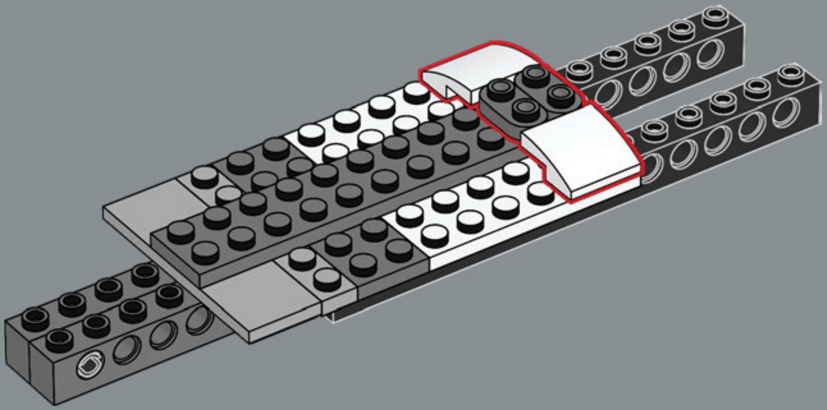

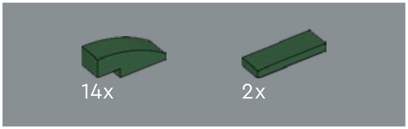

386

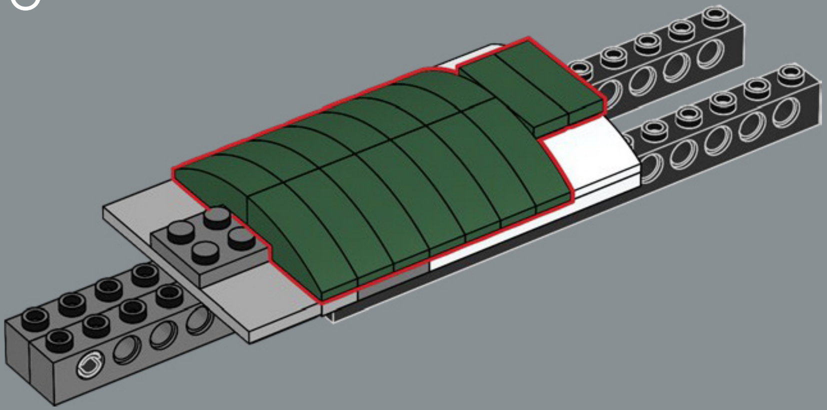

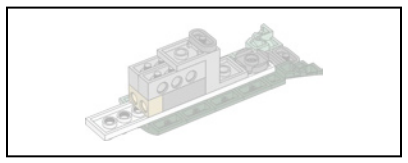

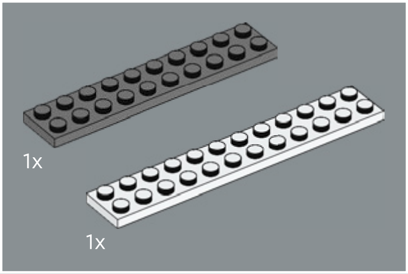

387

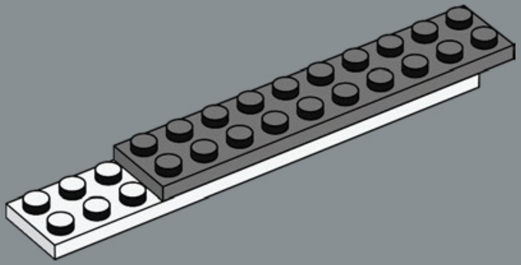

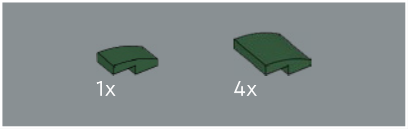

388

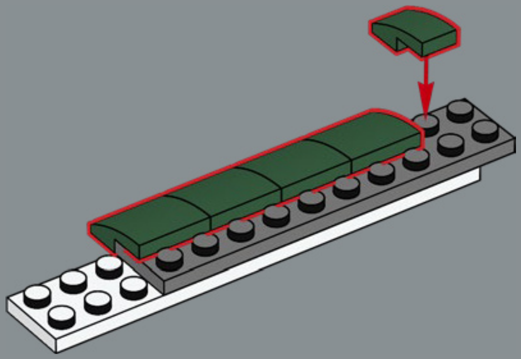

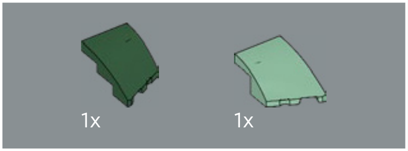

389

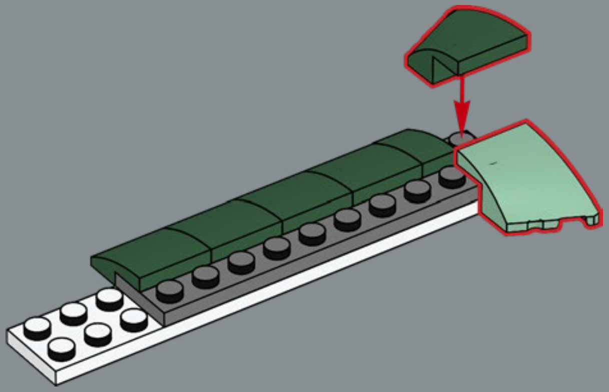

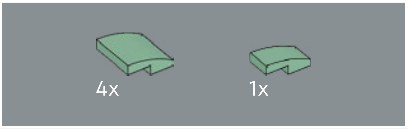

390

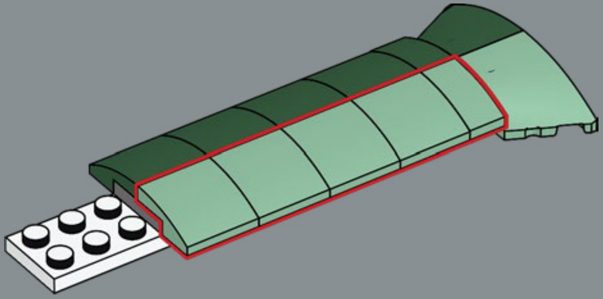

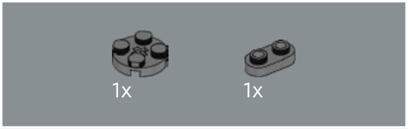

391

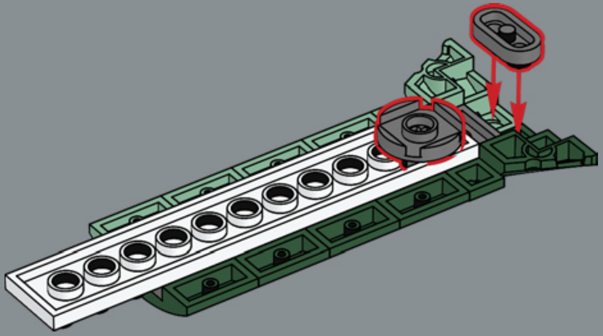

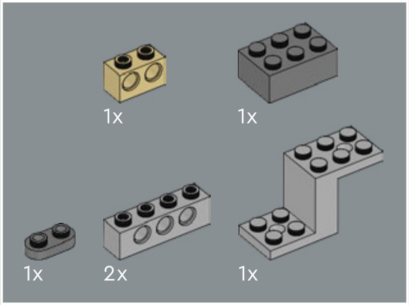
1x
1x
1x
2x
1x

392

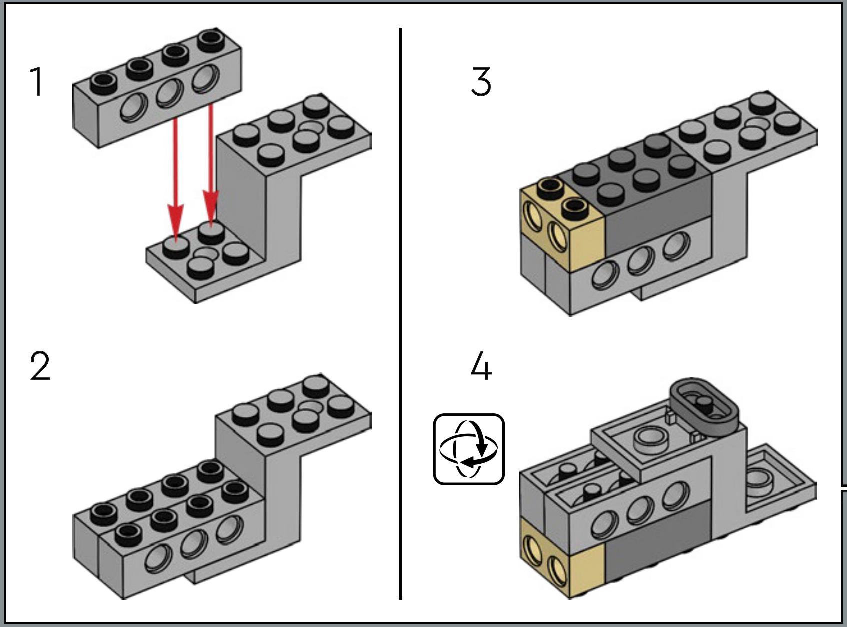

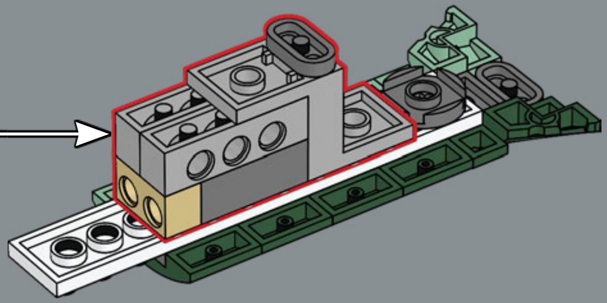

393

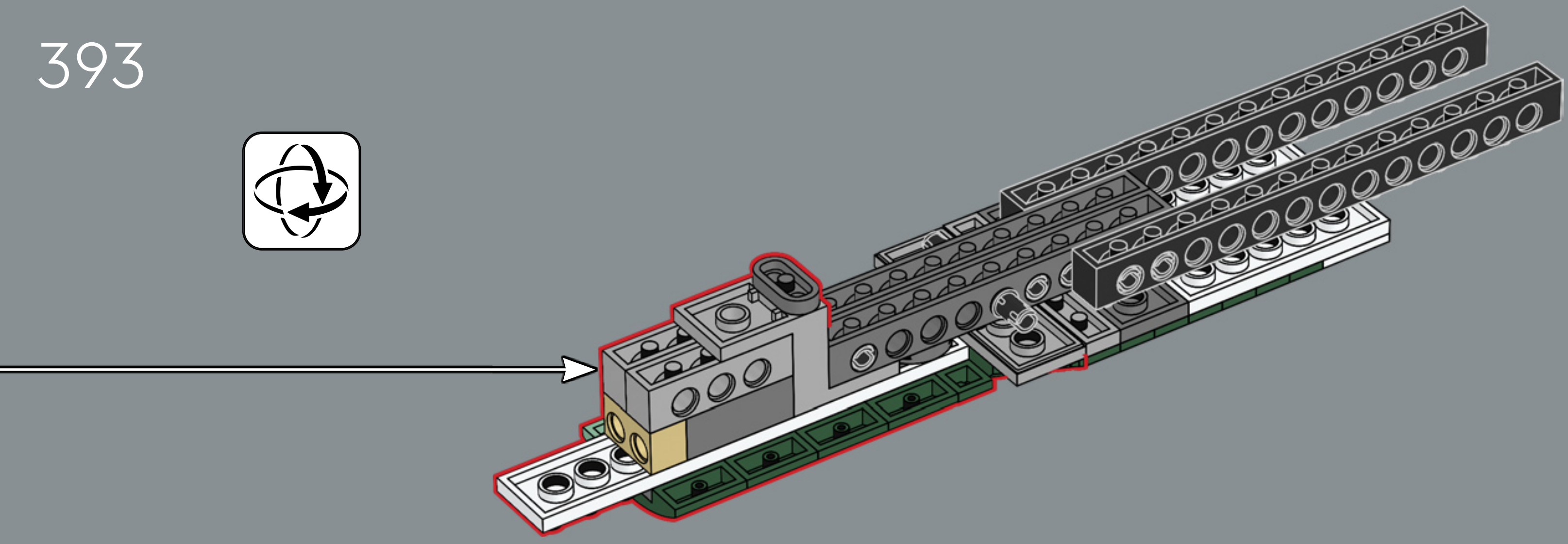

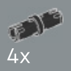

394

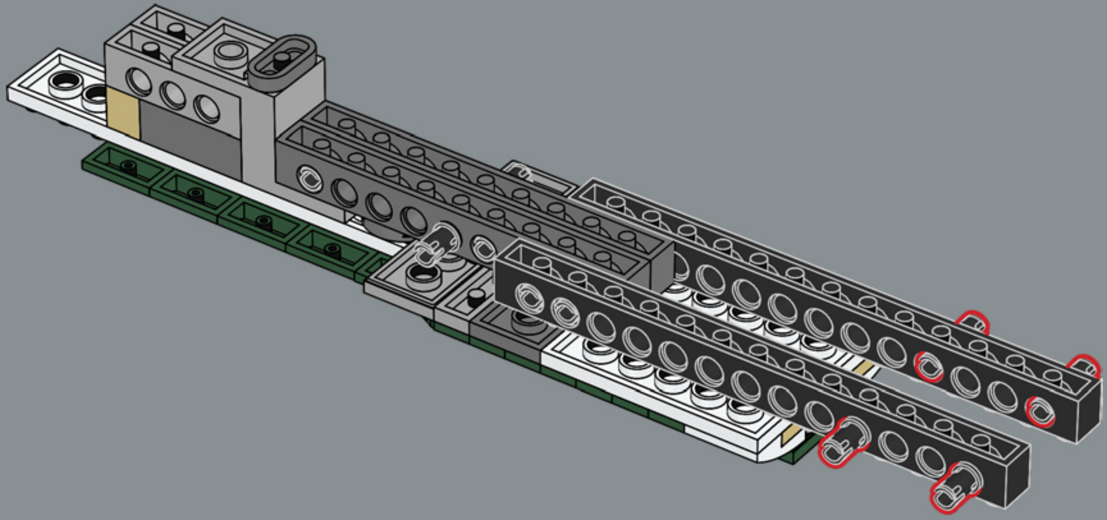

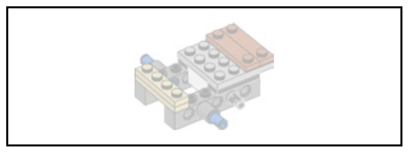

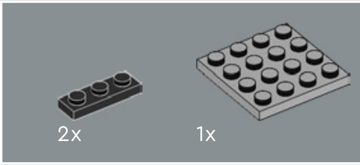

395

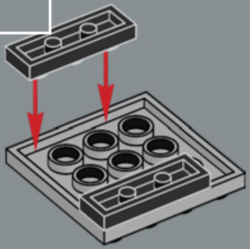

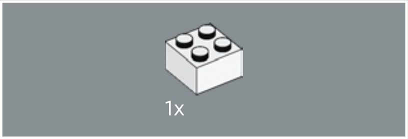

396

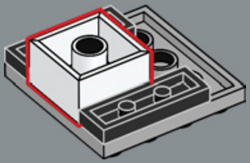

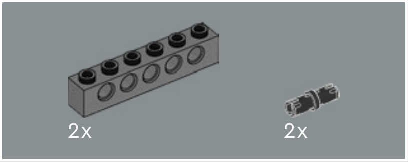

397

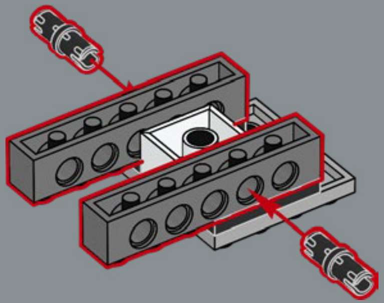

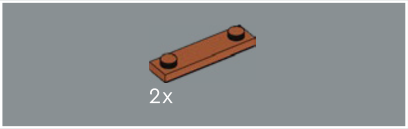

398

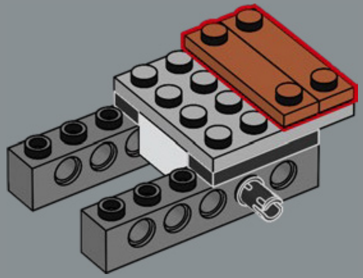

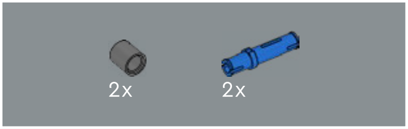

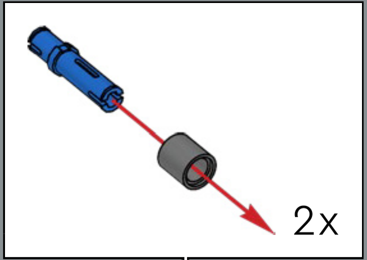

399

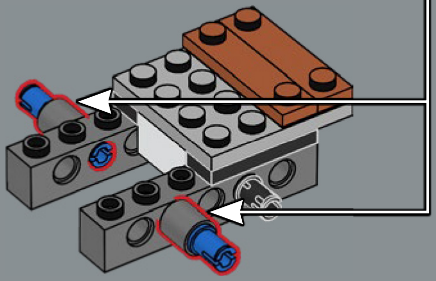

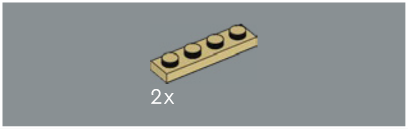

400

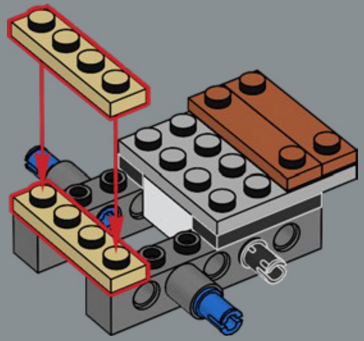

401

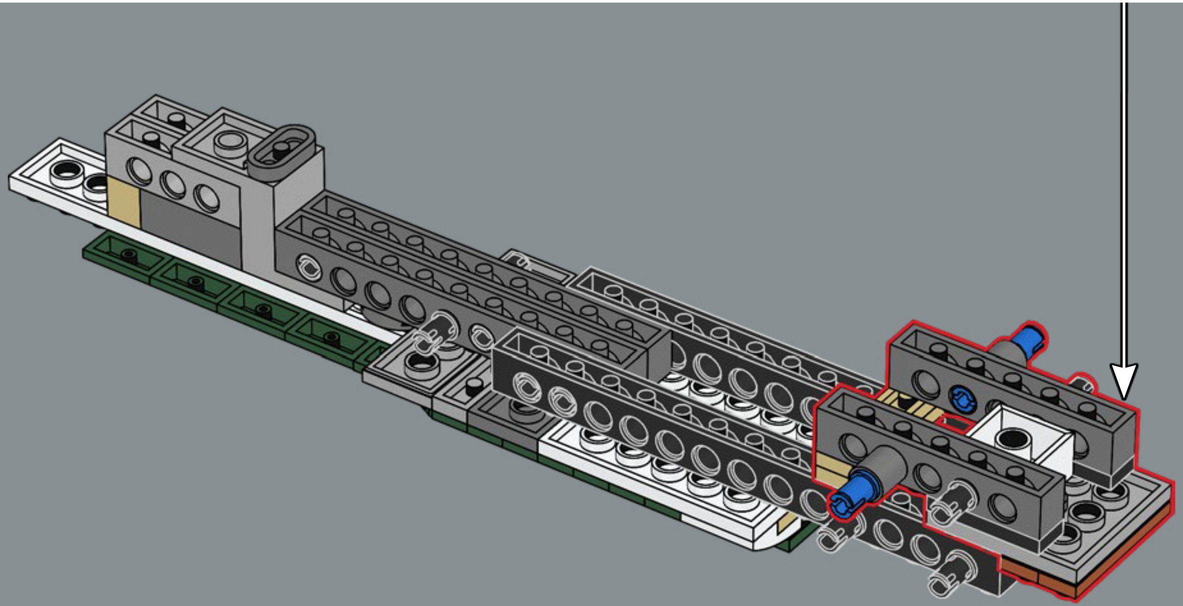

402

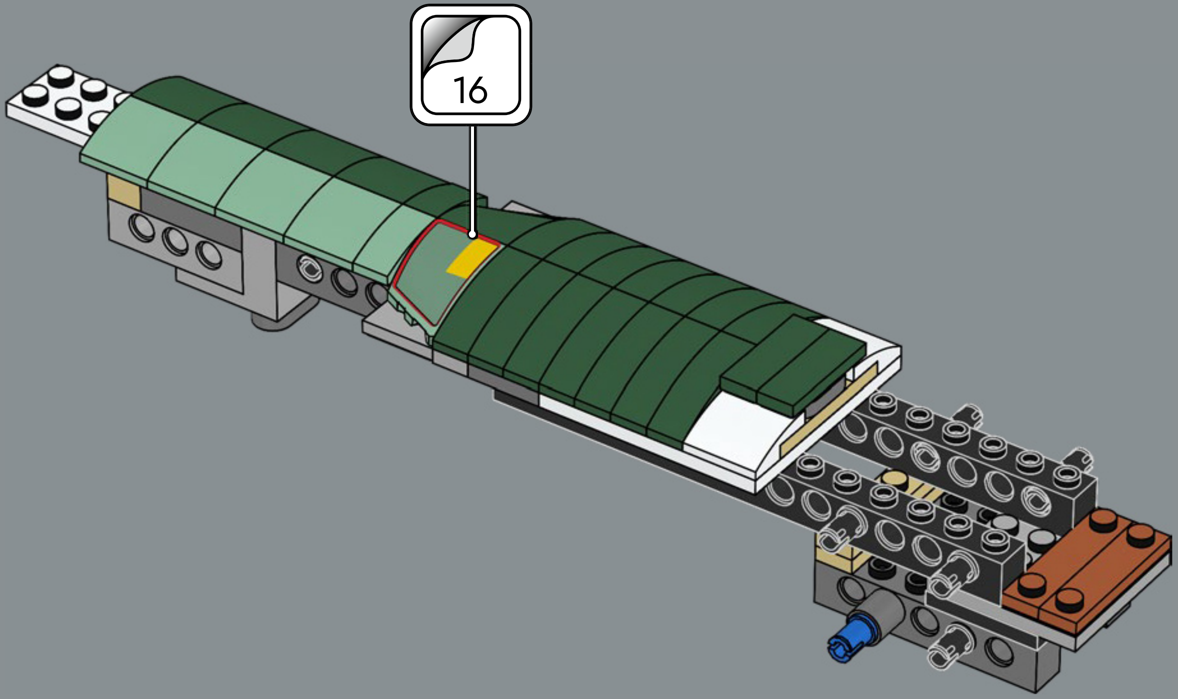

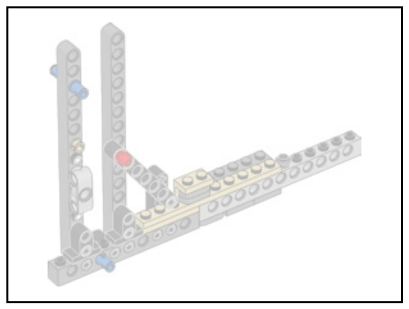

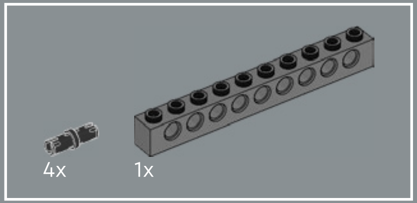

403

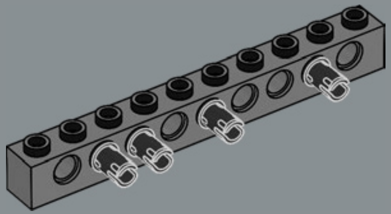

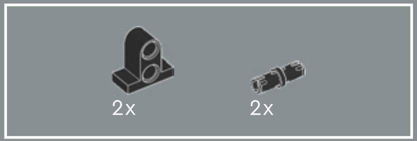

404

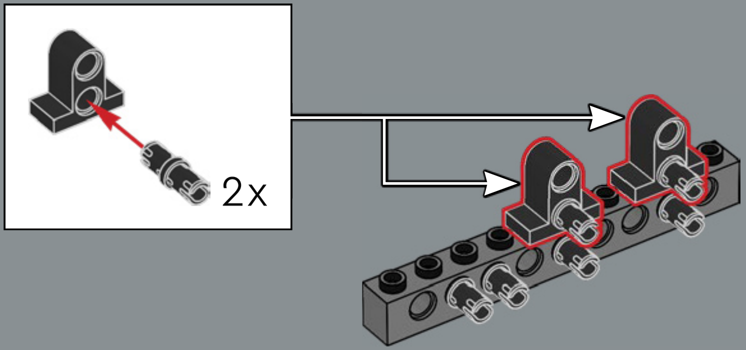

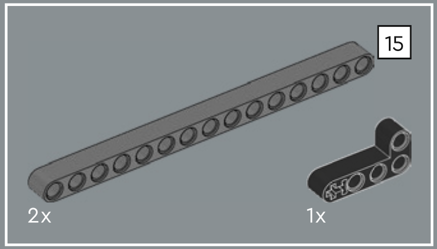

405

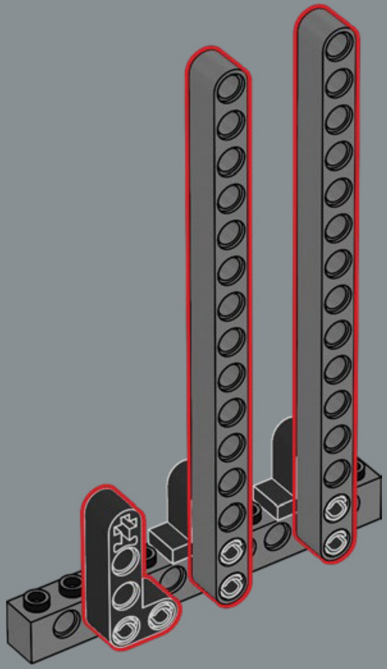

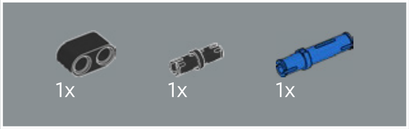

406

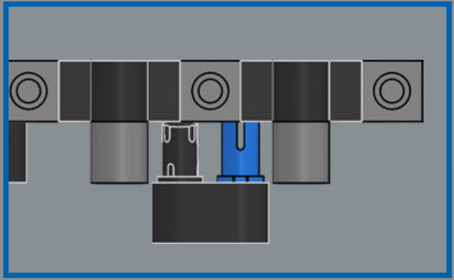

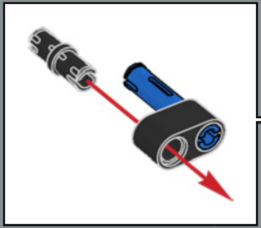

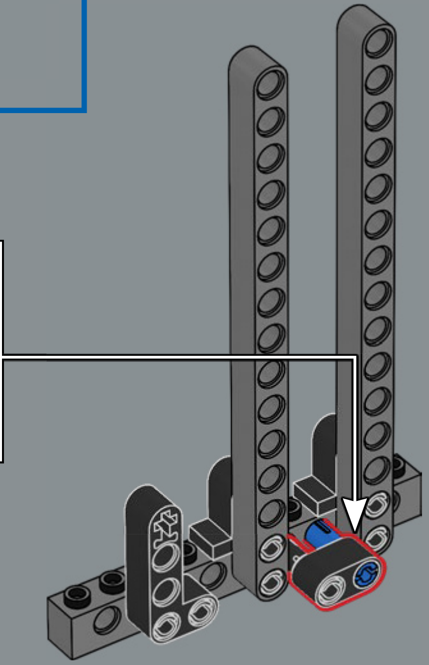

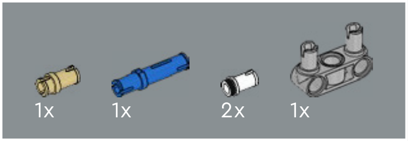

407

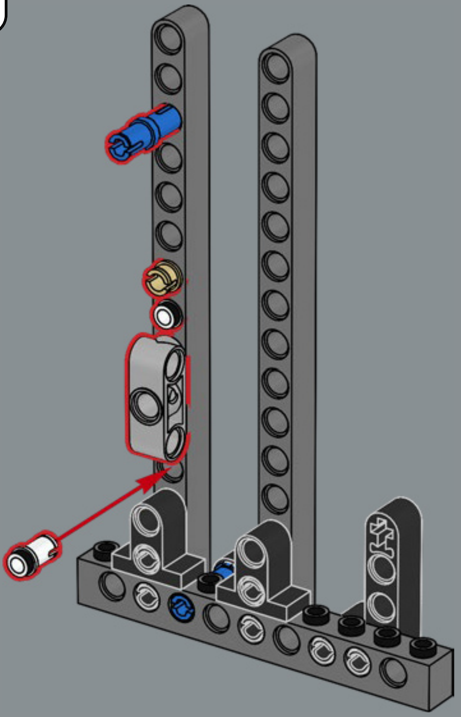

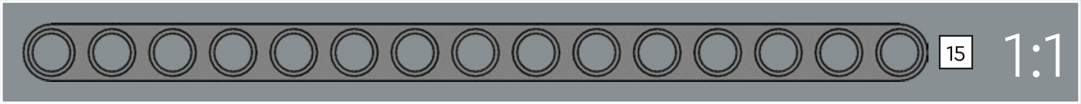

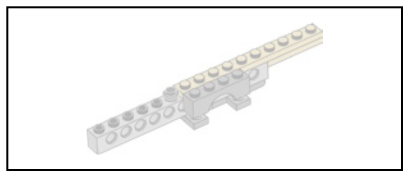

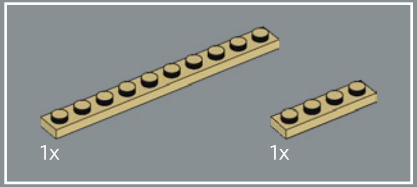

408

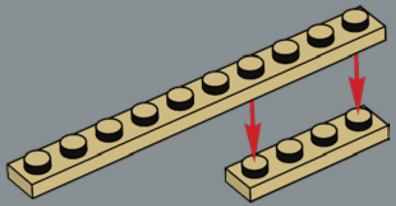

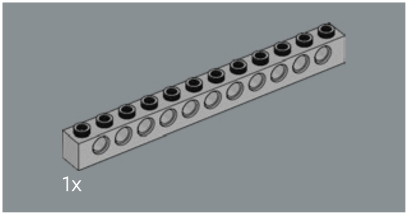

409

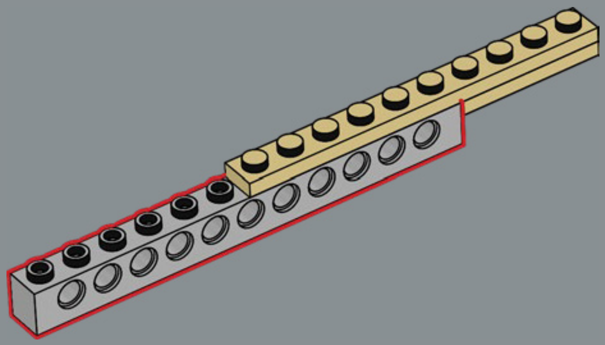

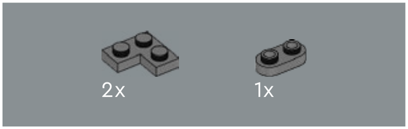

410

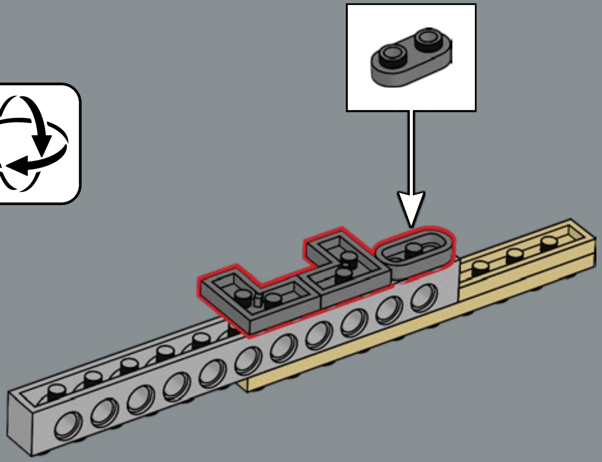

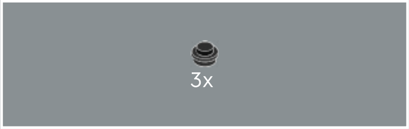

411

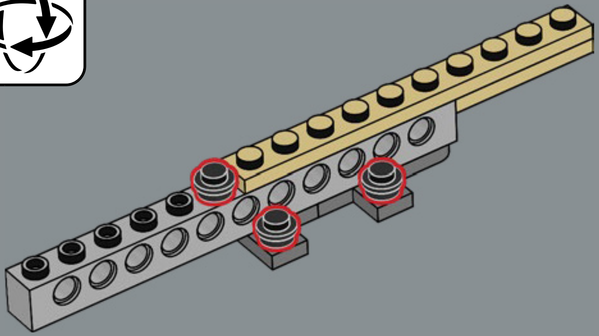

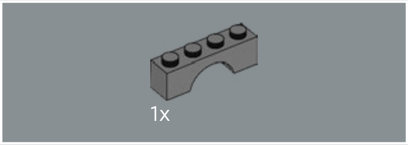

412

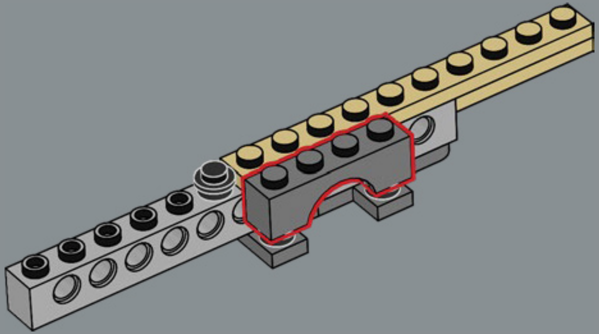

413

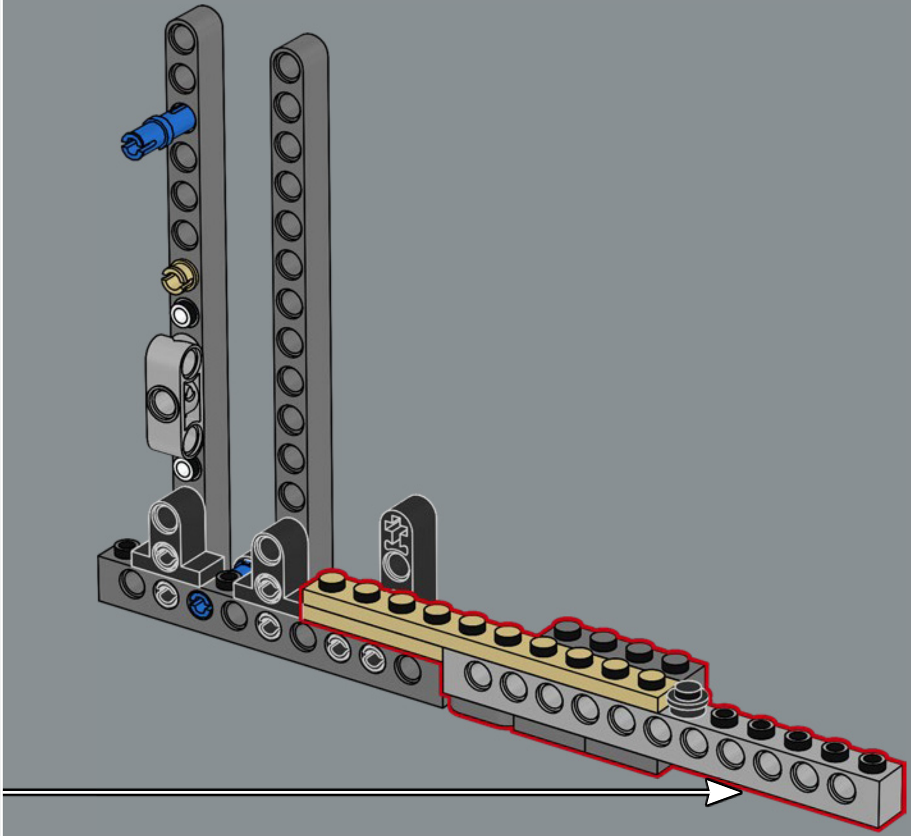

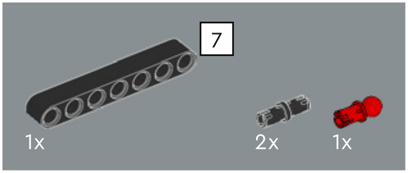

414

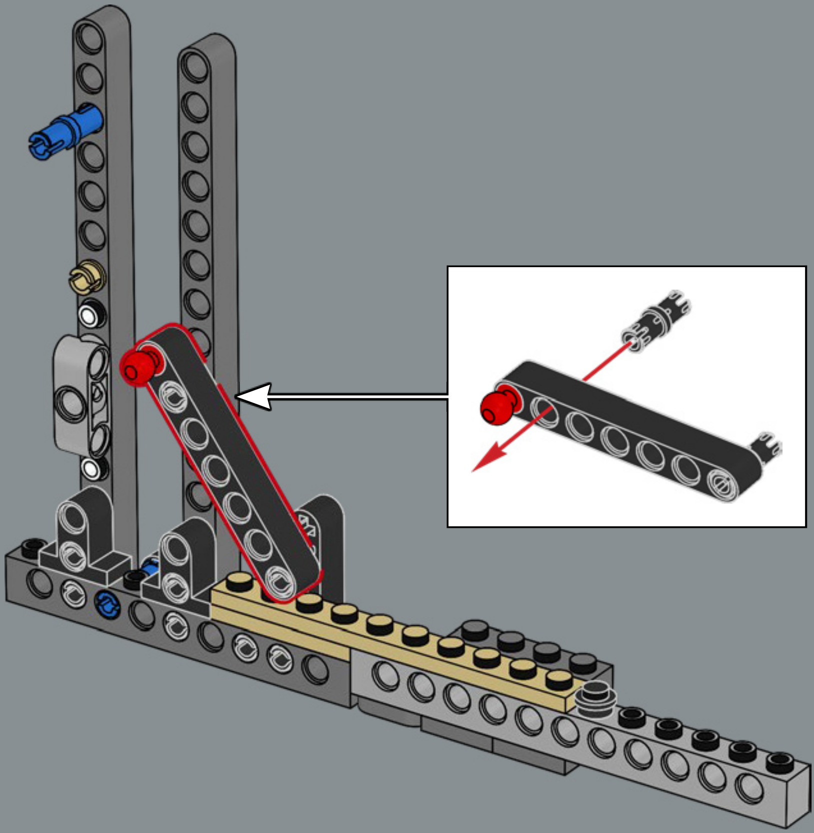

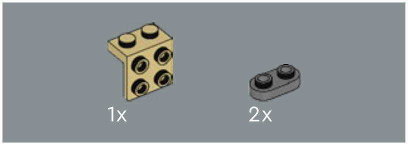

415

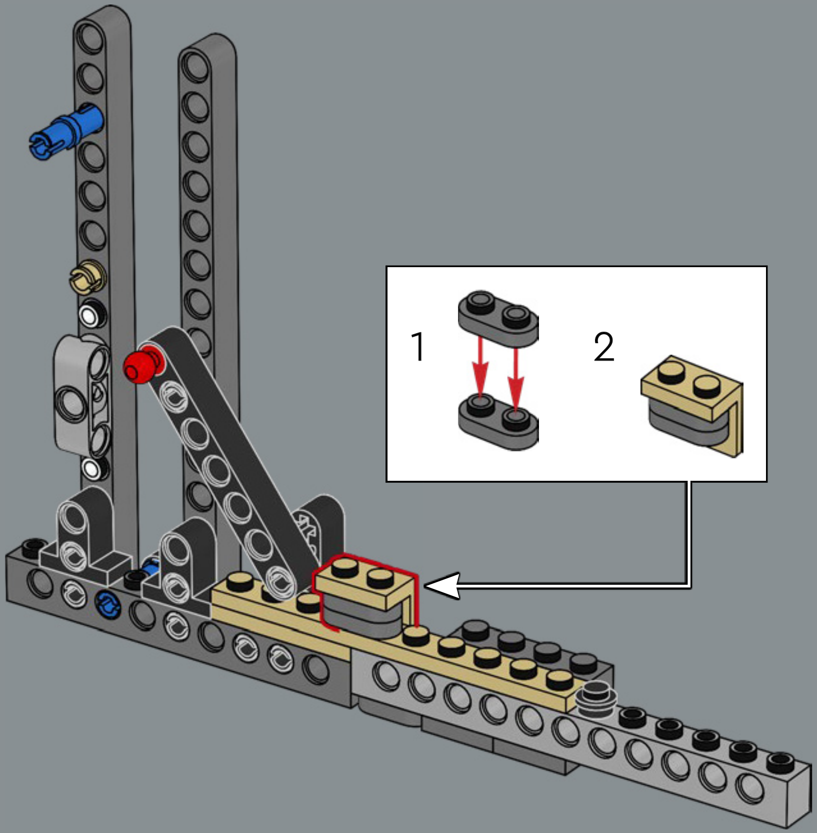

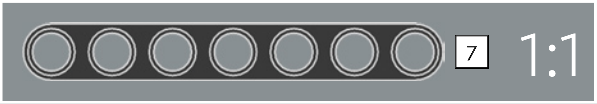

416

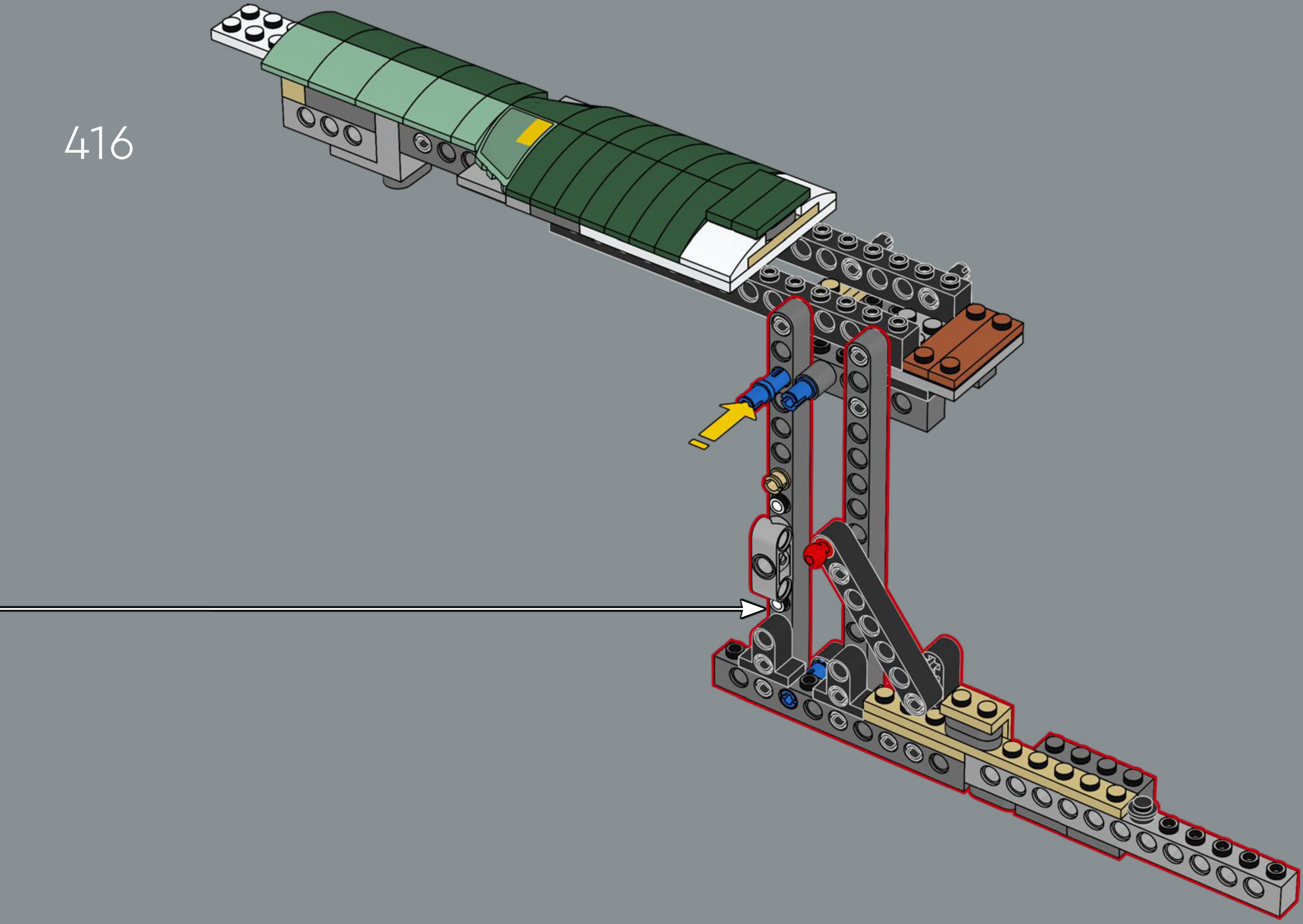

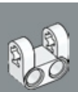

1x

417

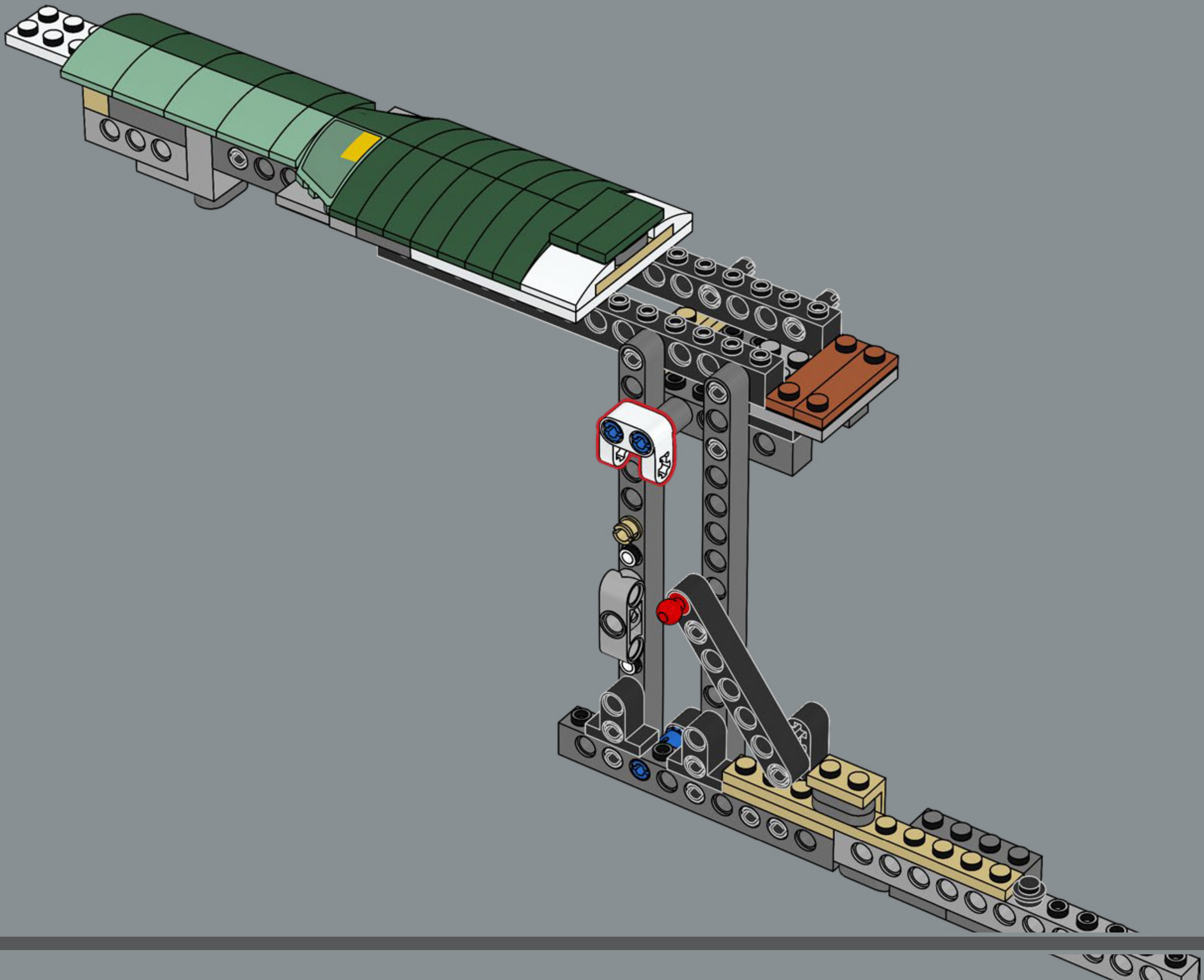

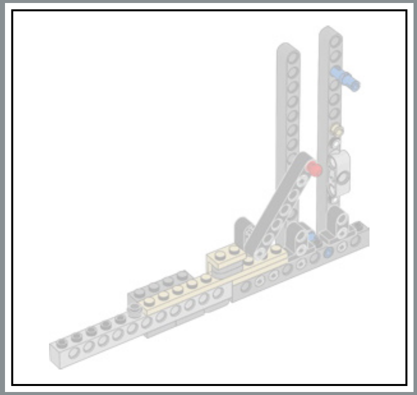

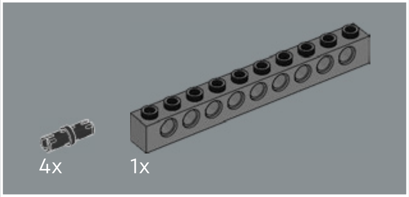

418

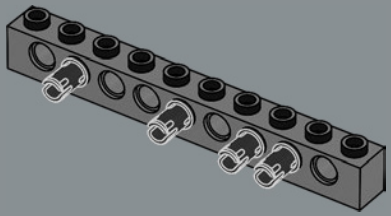

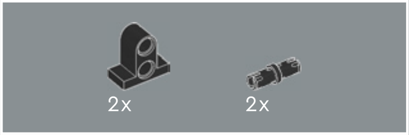

419

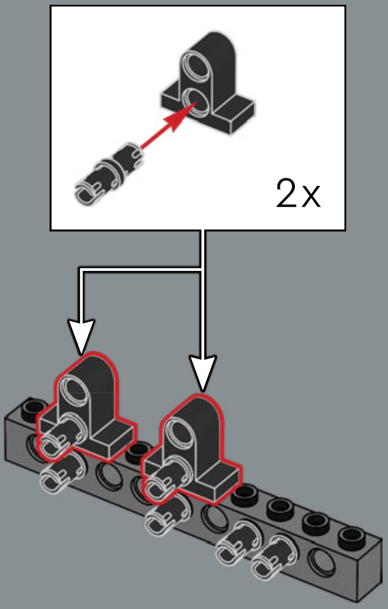

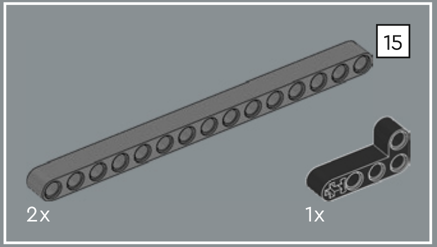

420

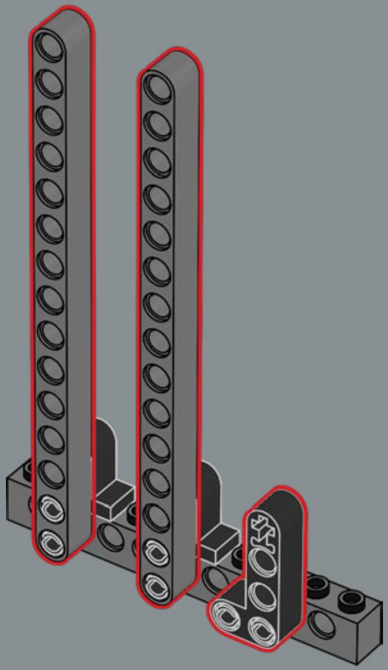

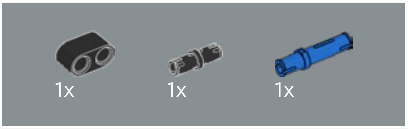

421

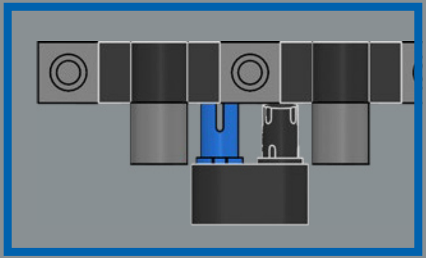

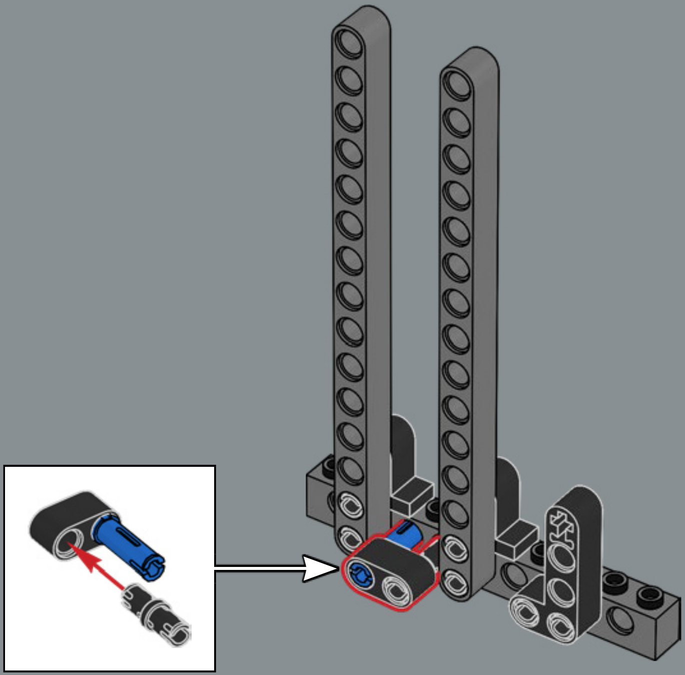

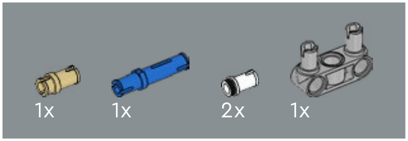

422

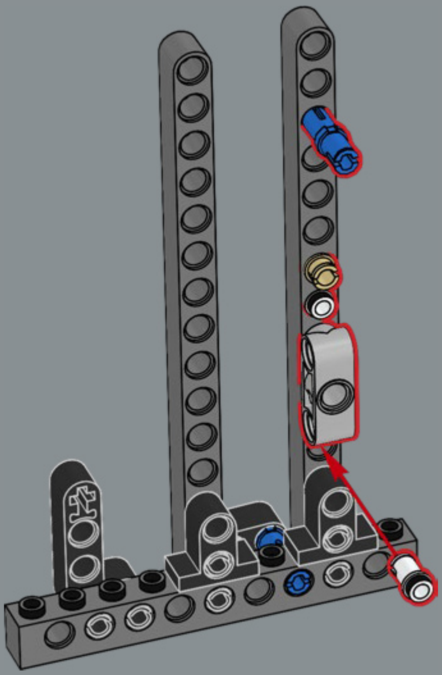

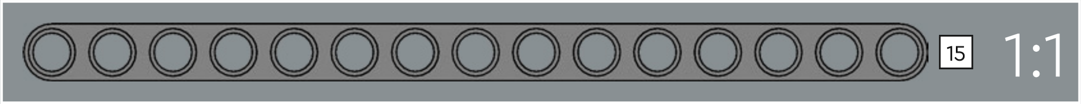

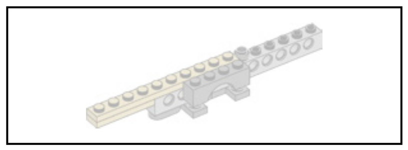

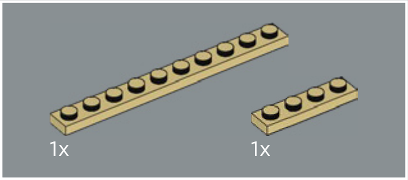

423

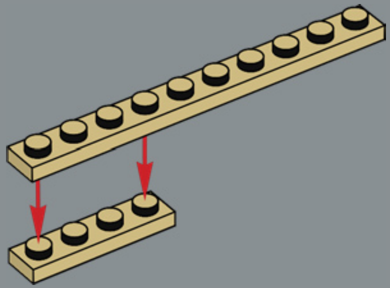

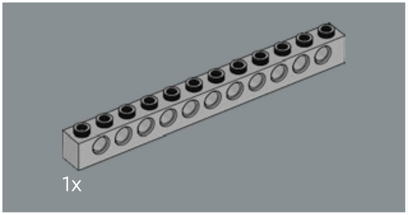

424

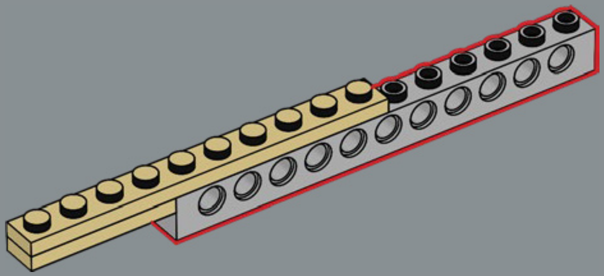

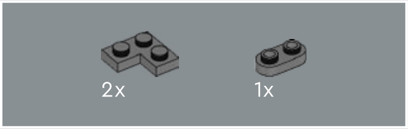

425

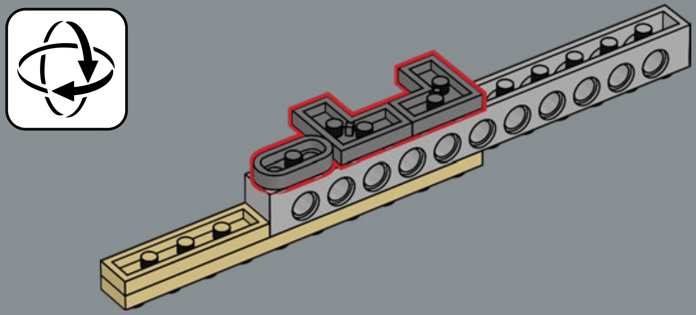

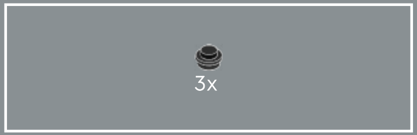

426

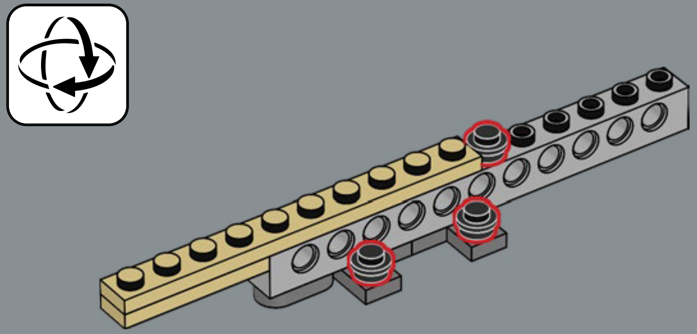

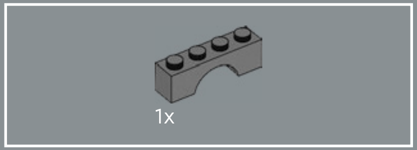

427

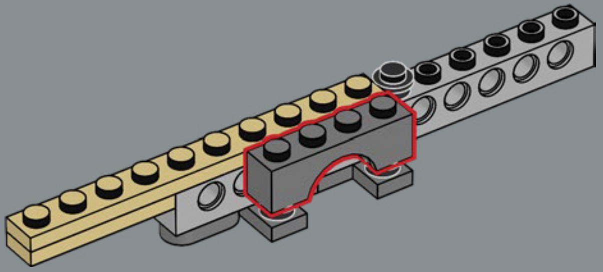

428

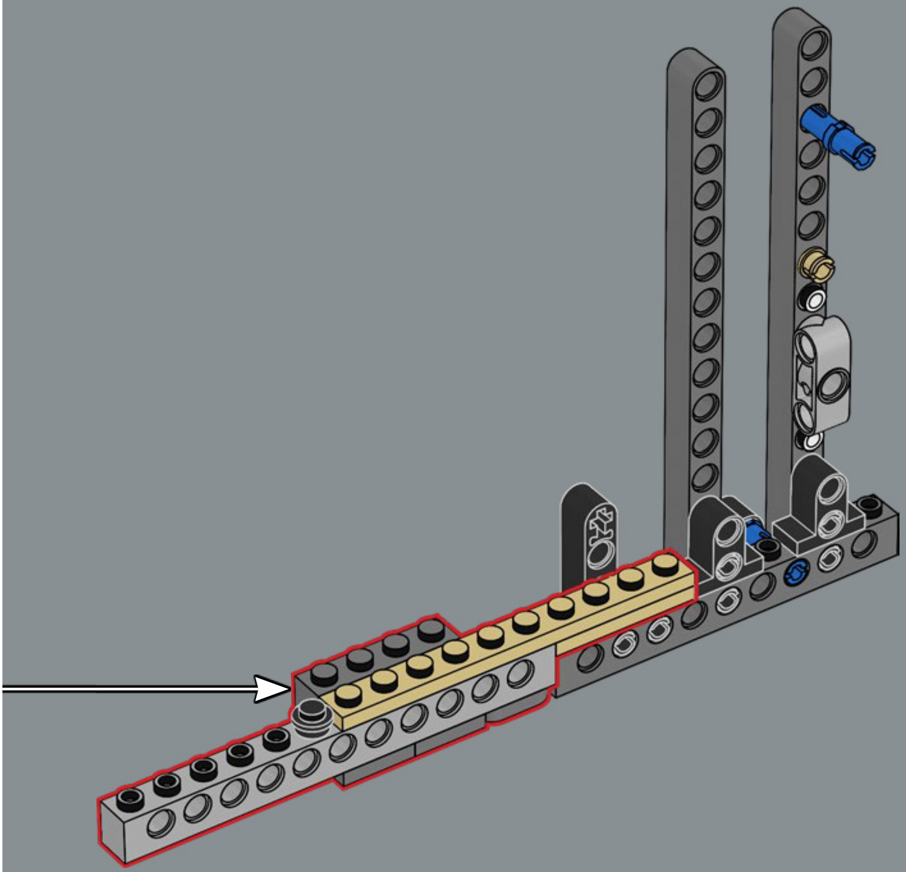

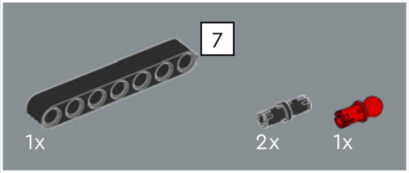

429

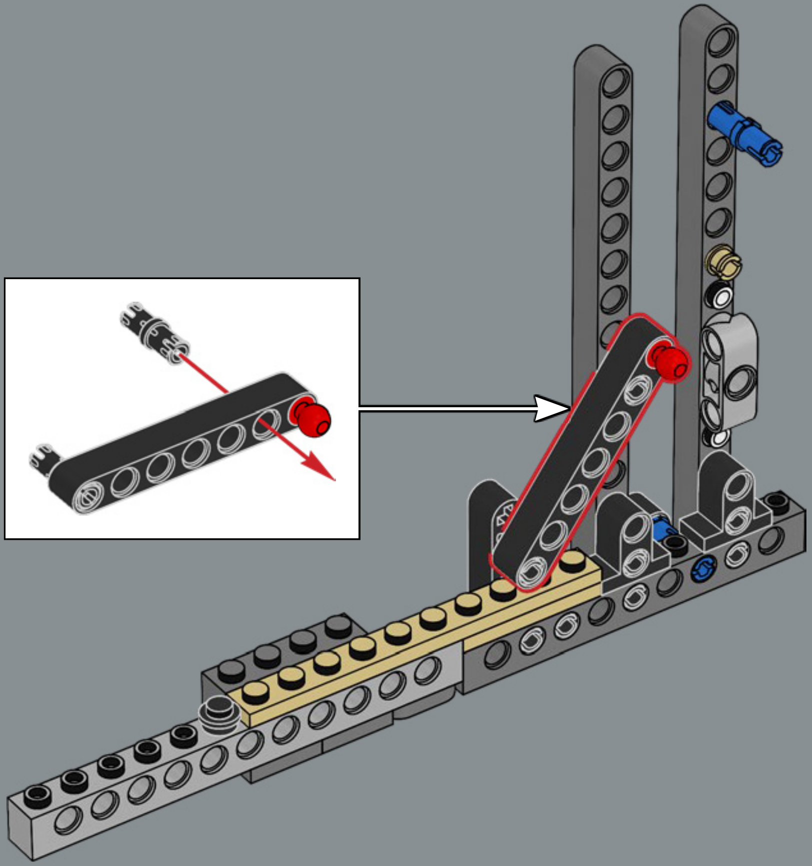

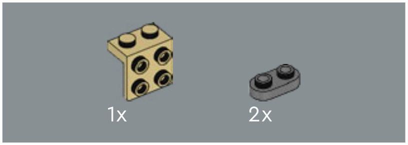

430

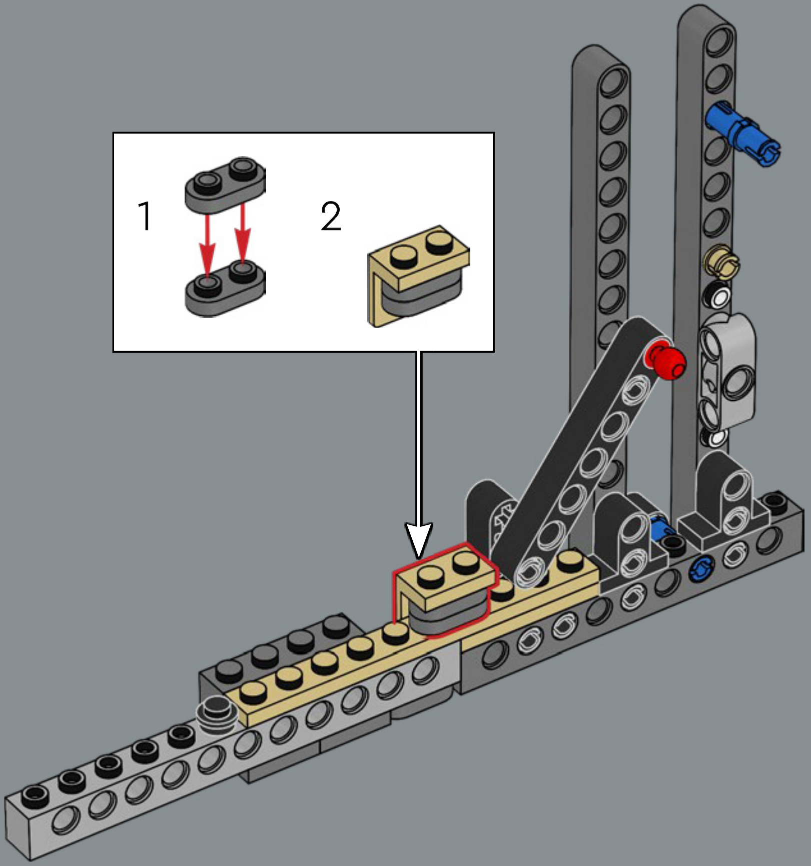

431

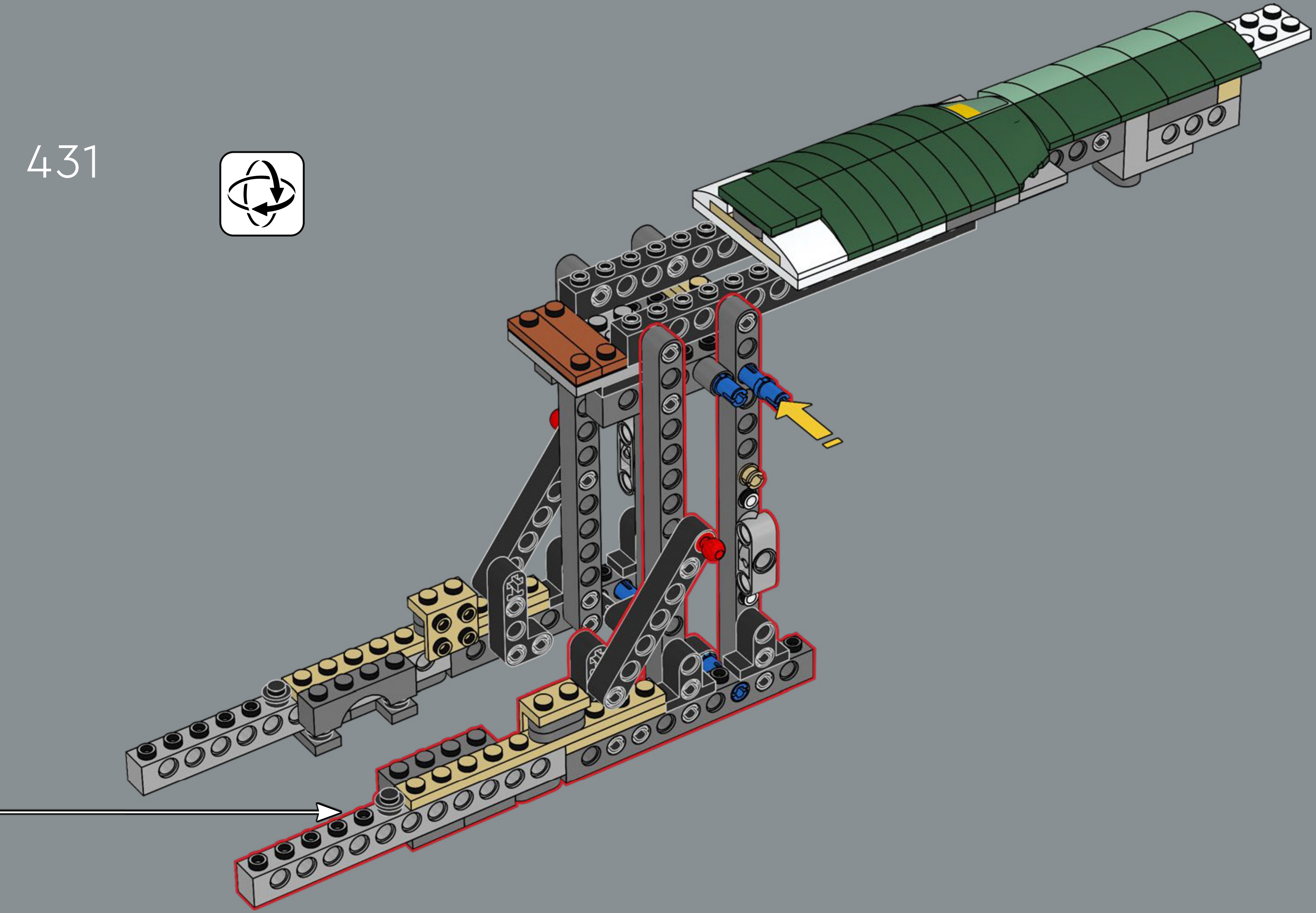

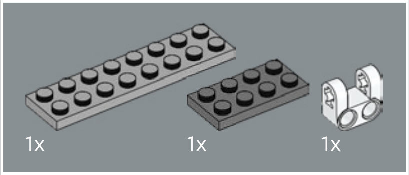

432

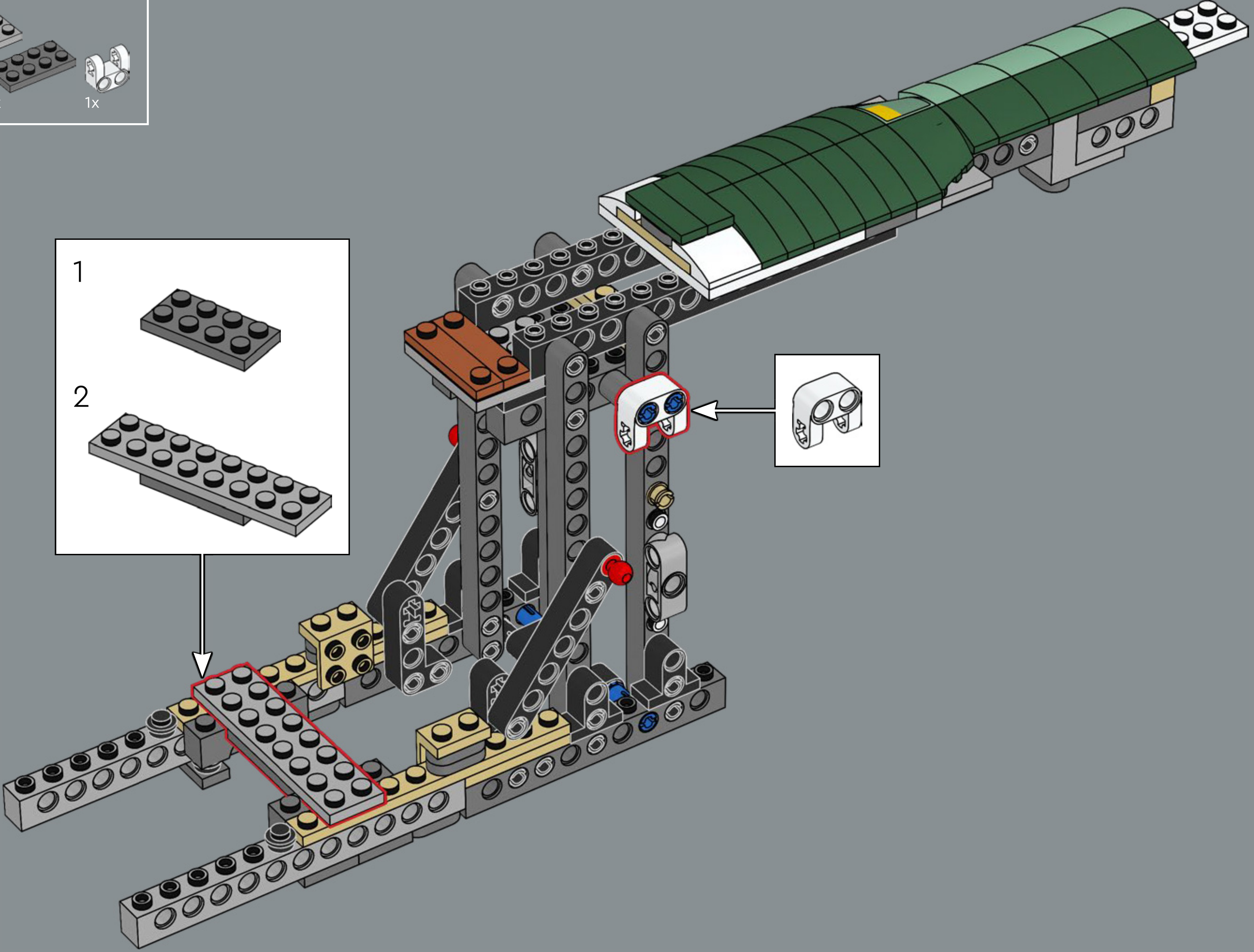

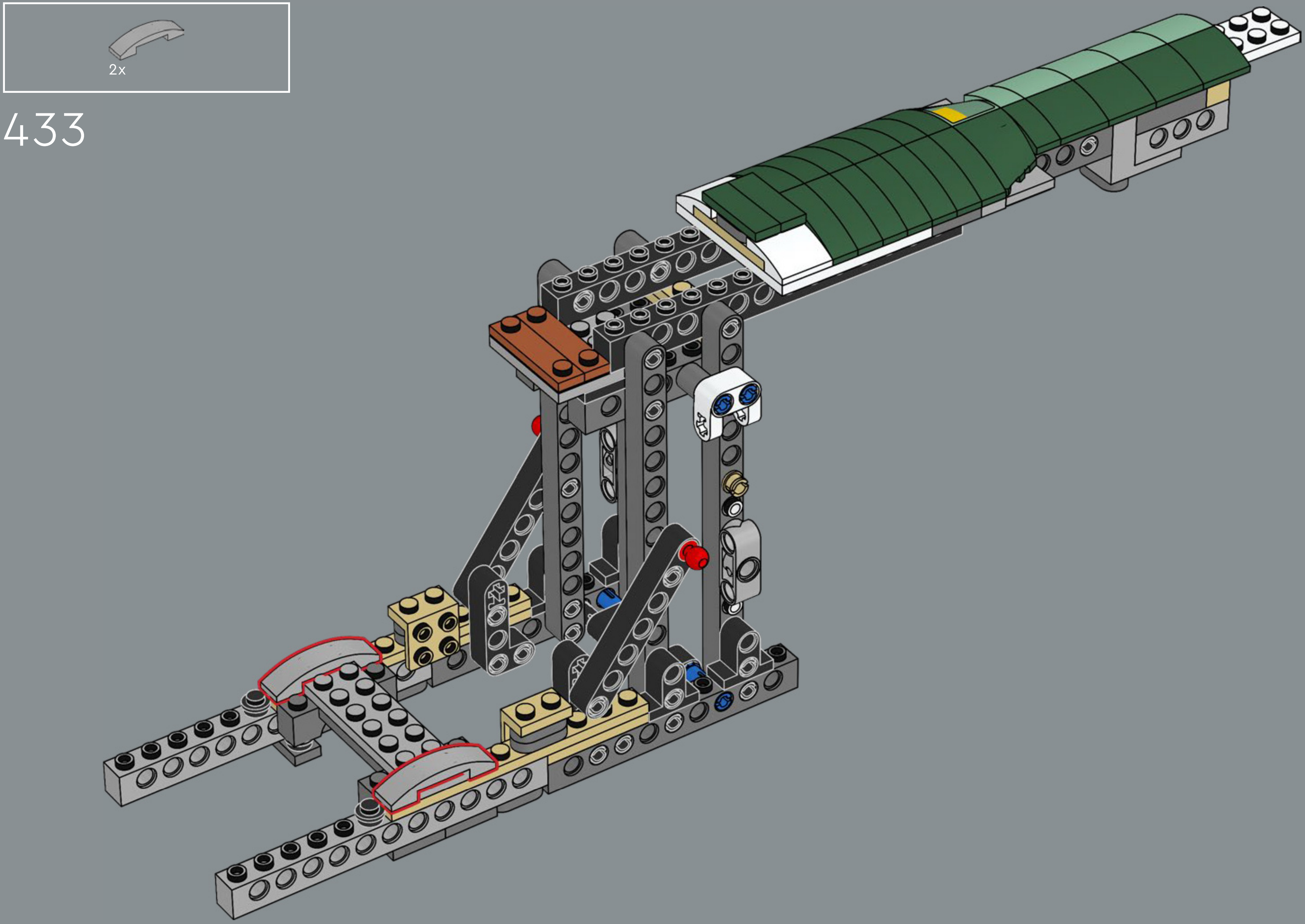

433

434

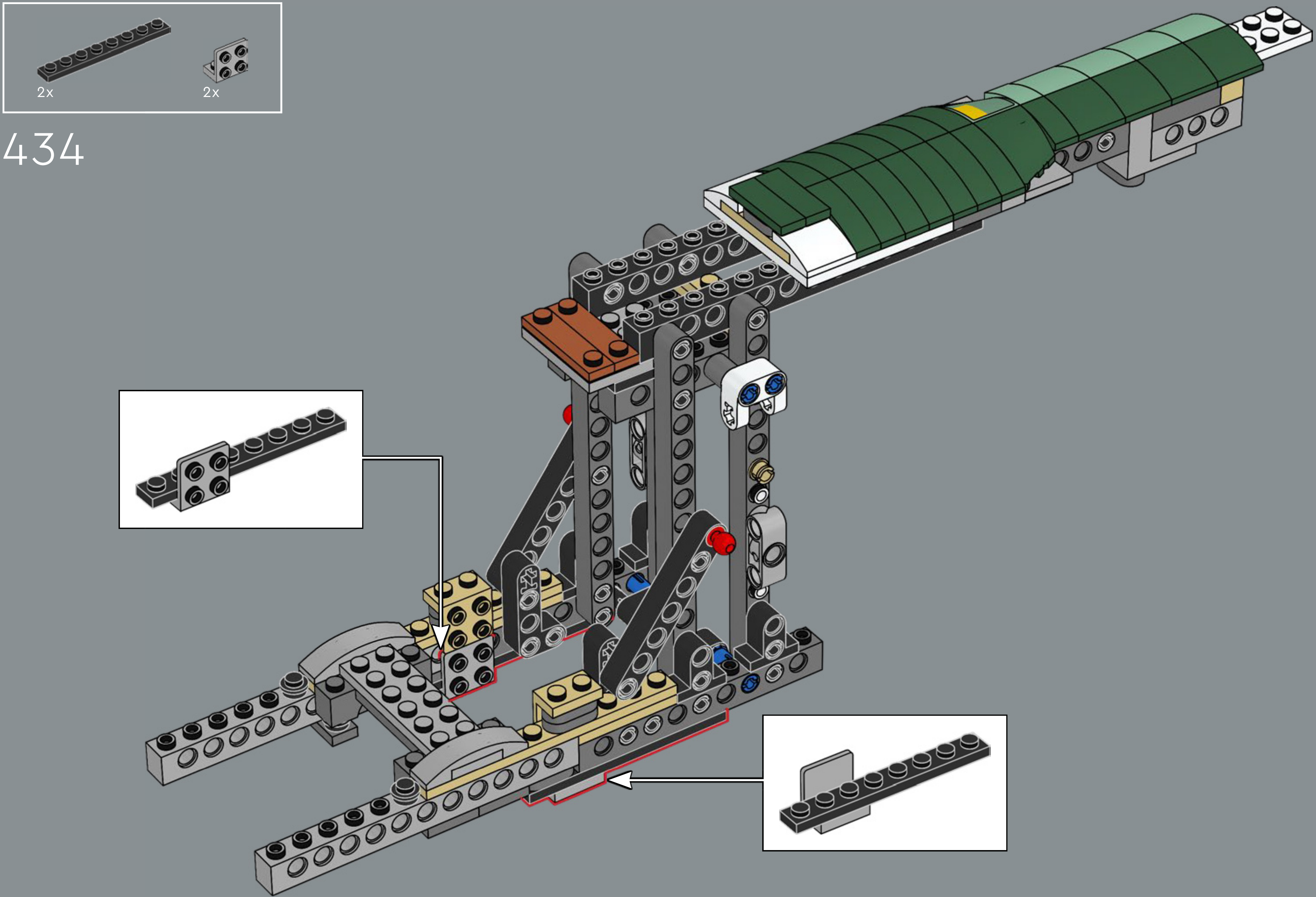

435

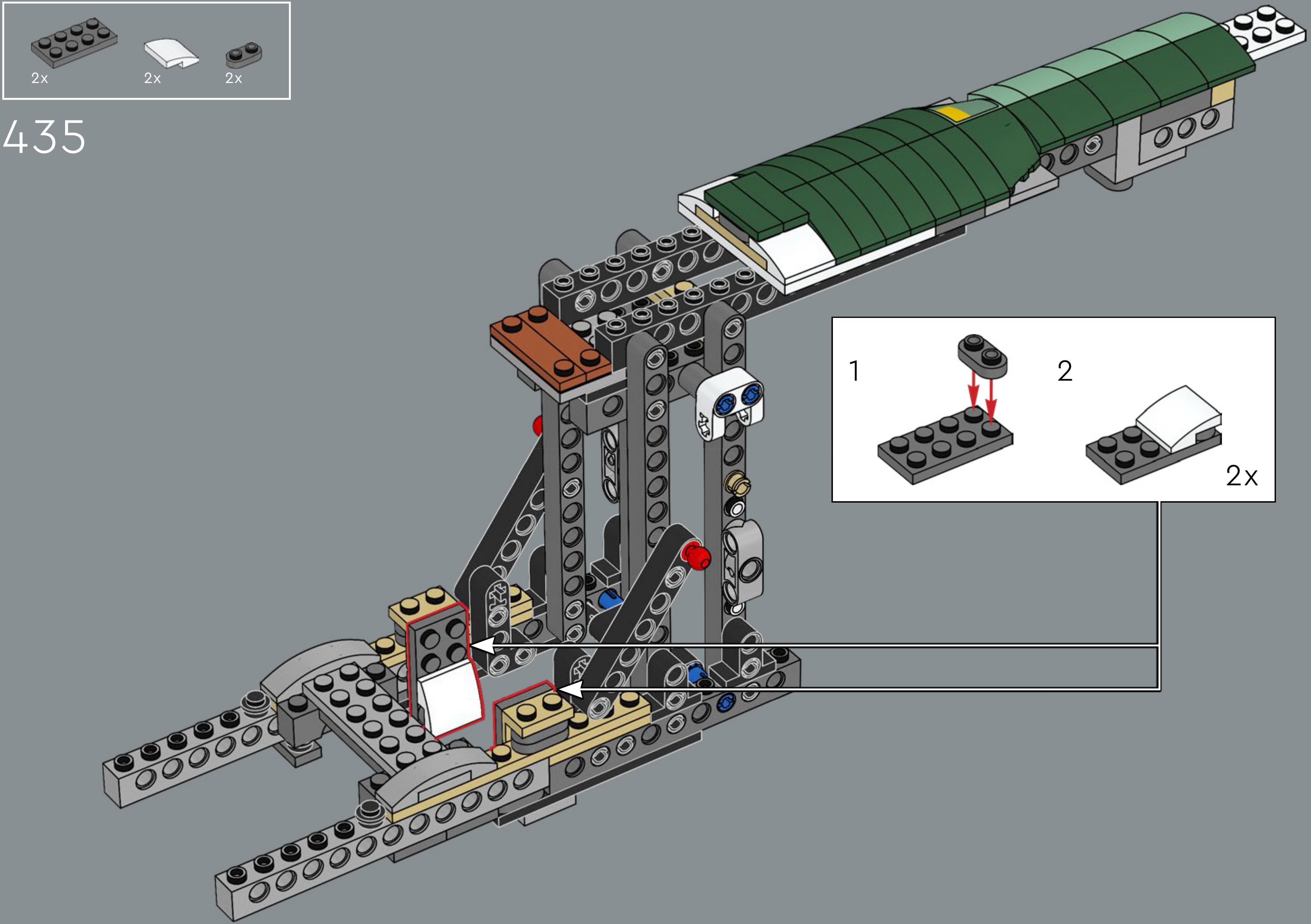

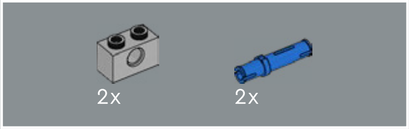

436

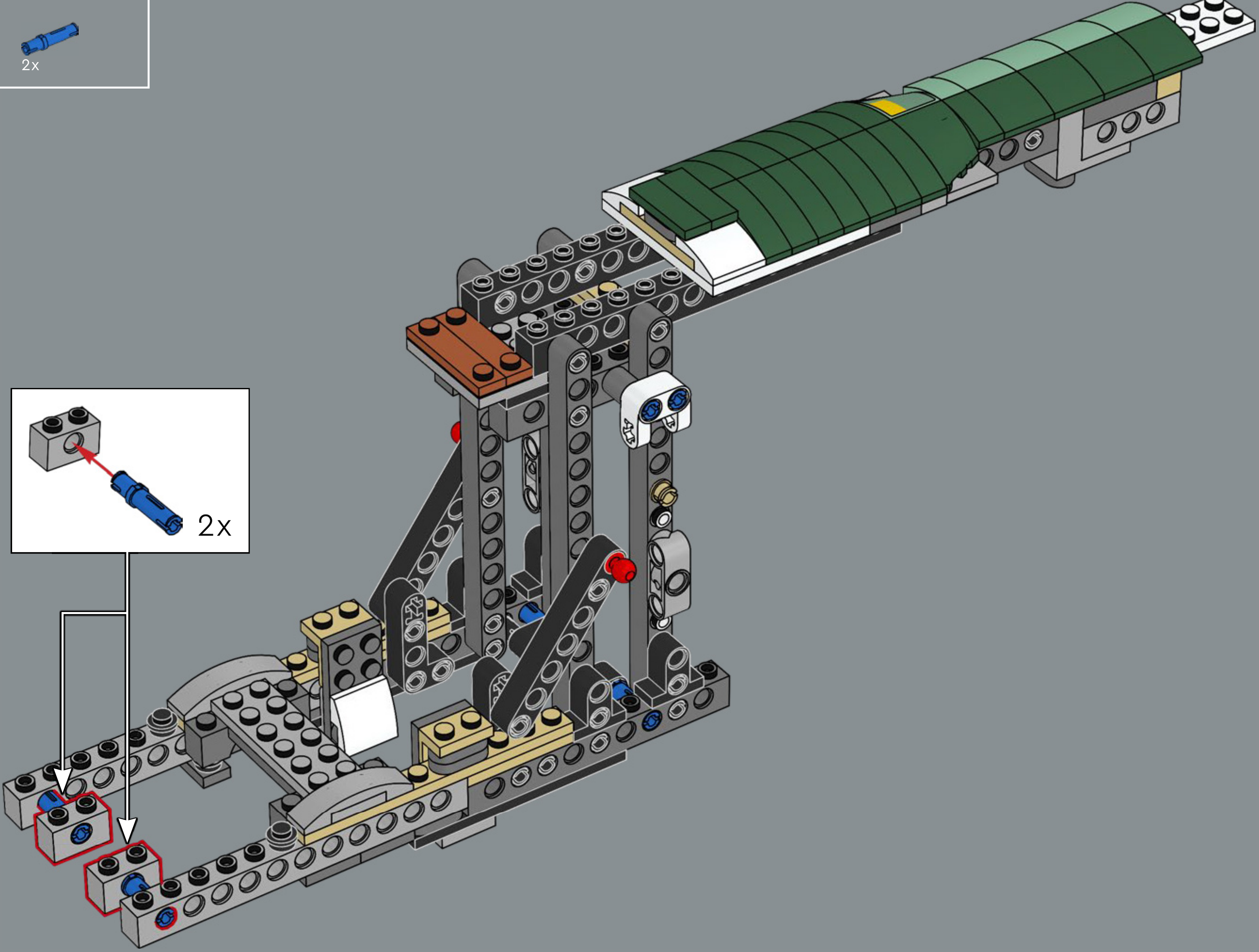

437

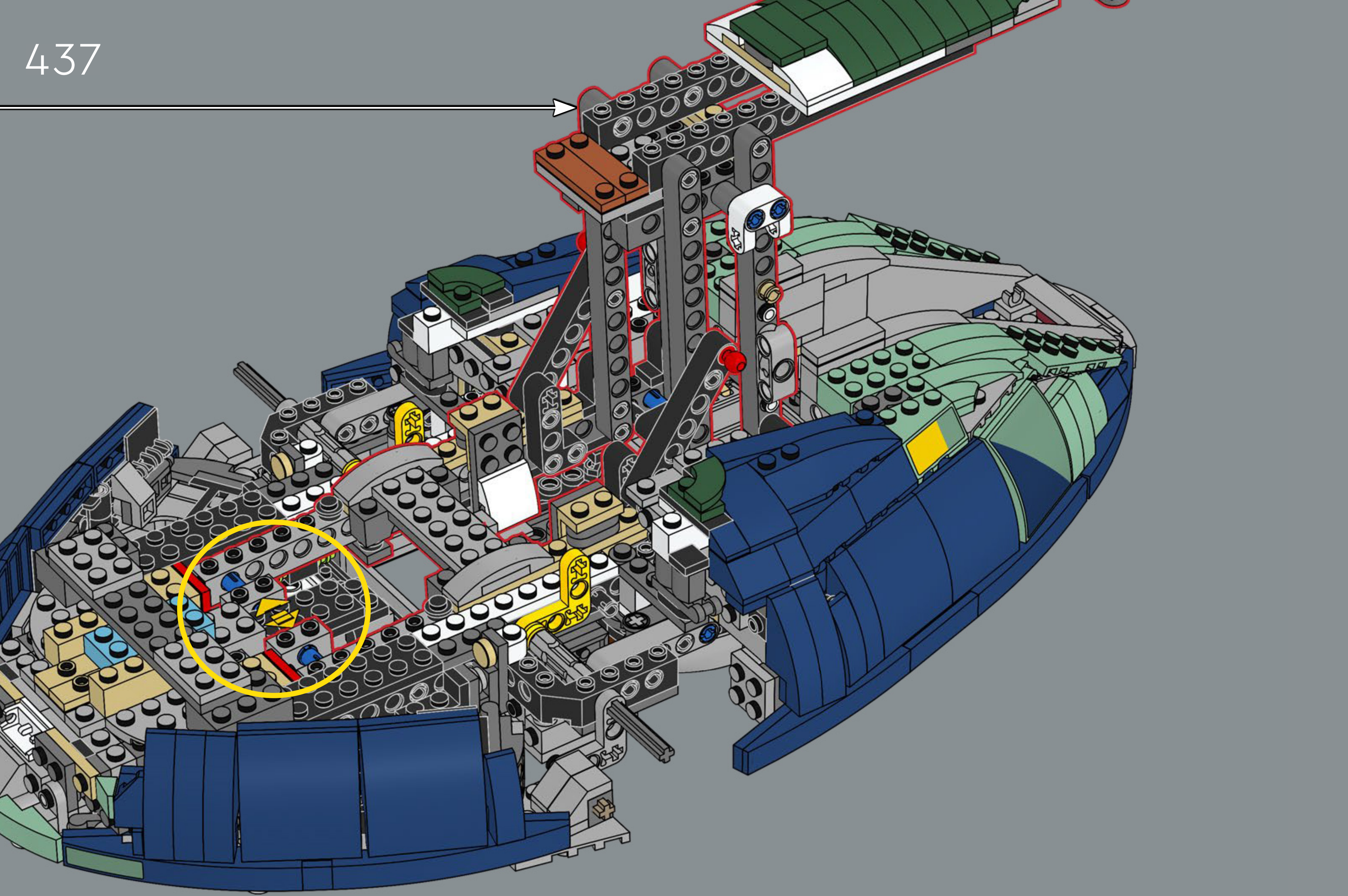

438

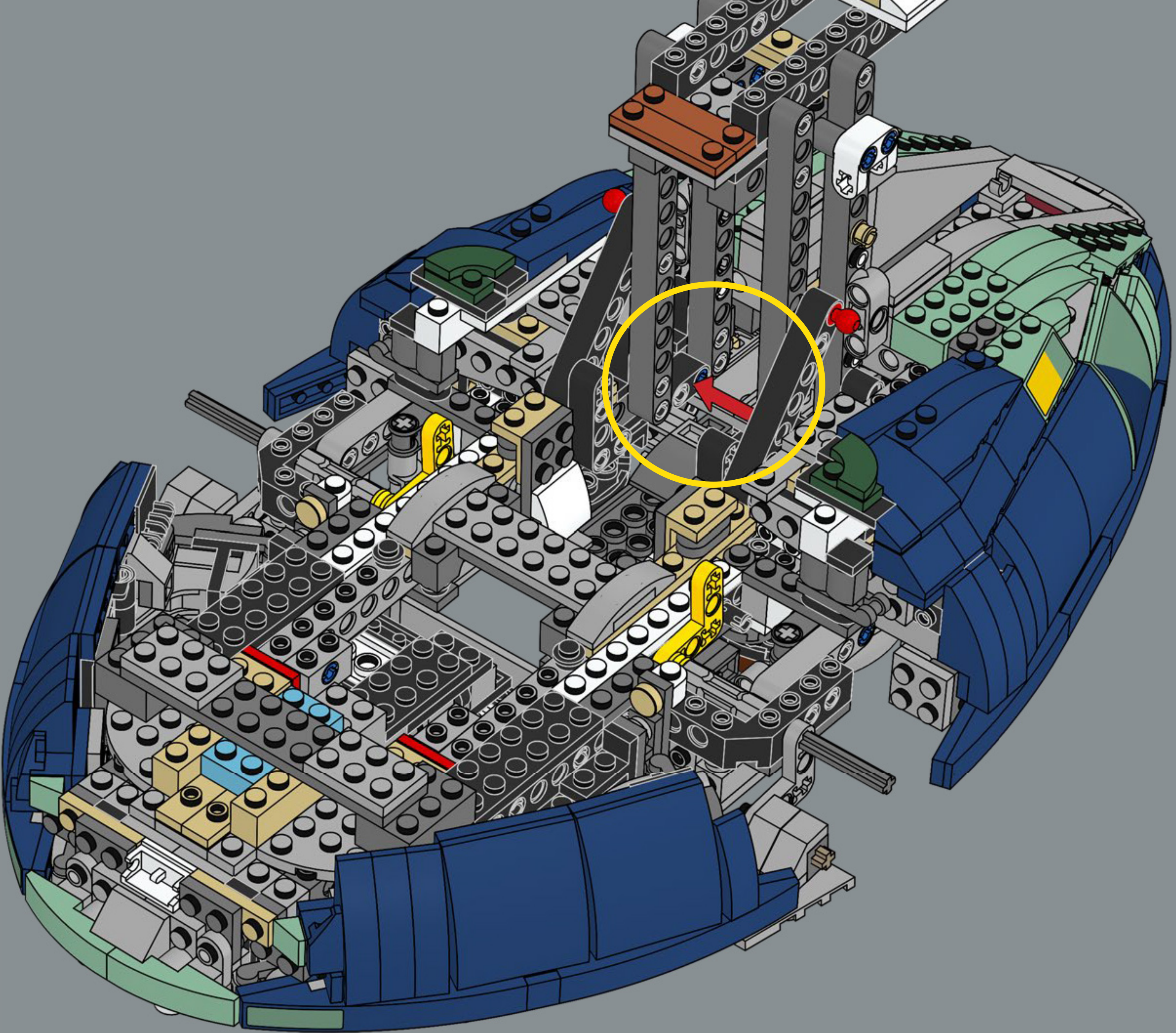

439

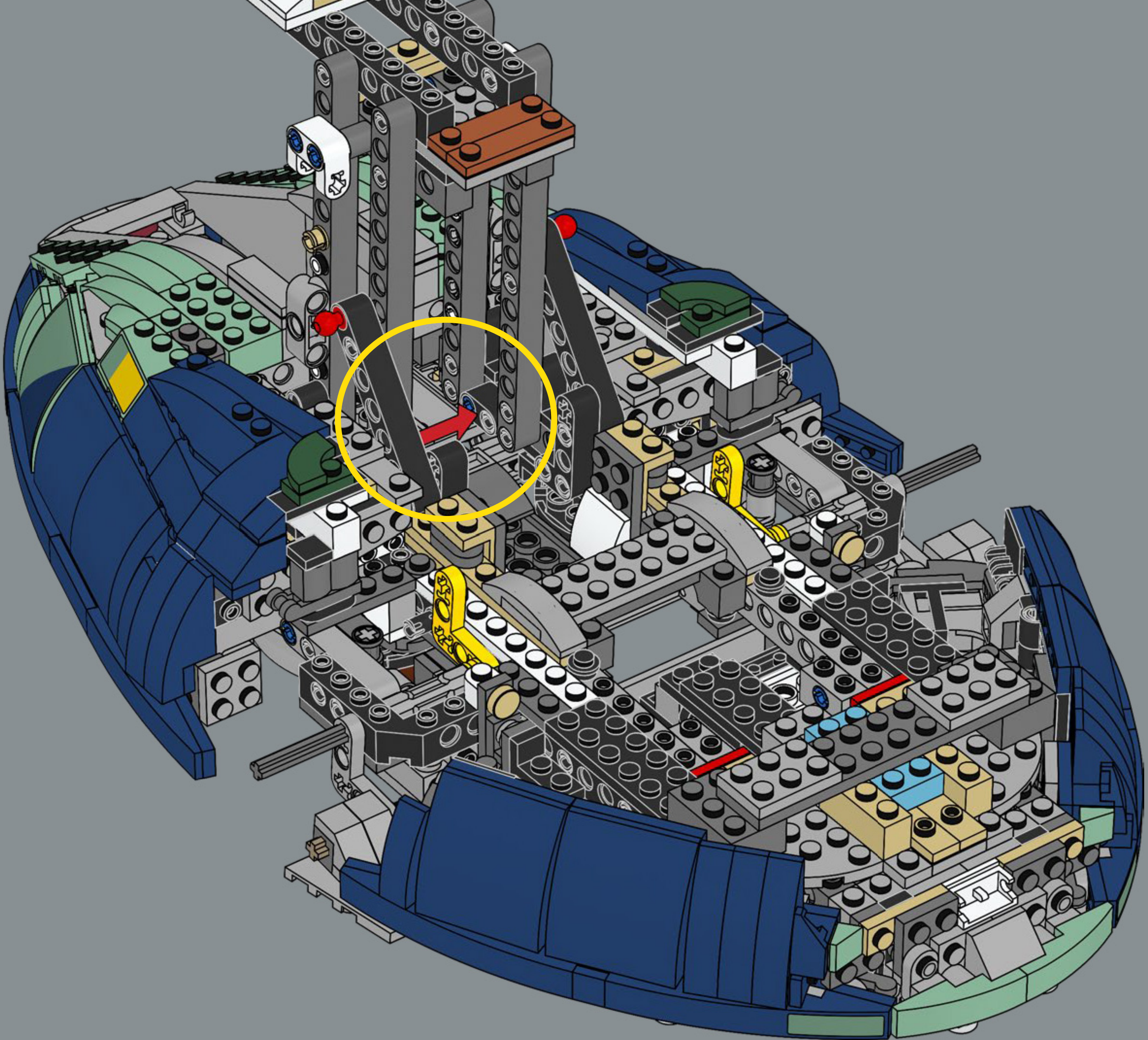

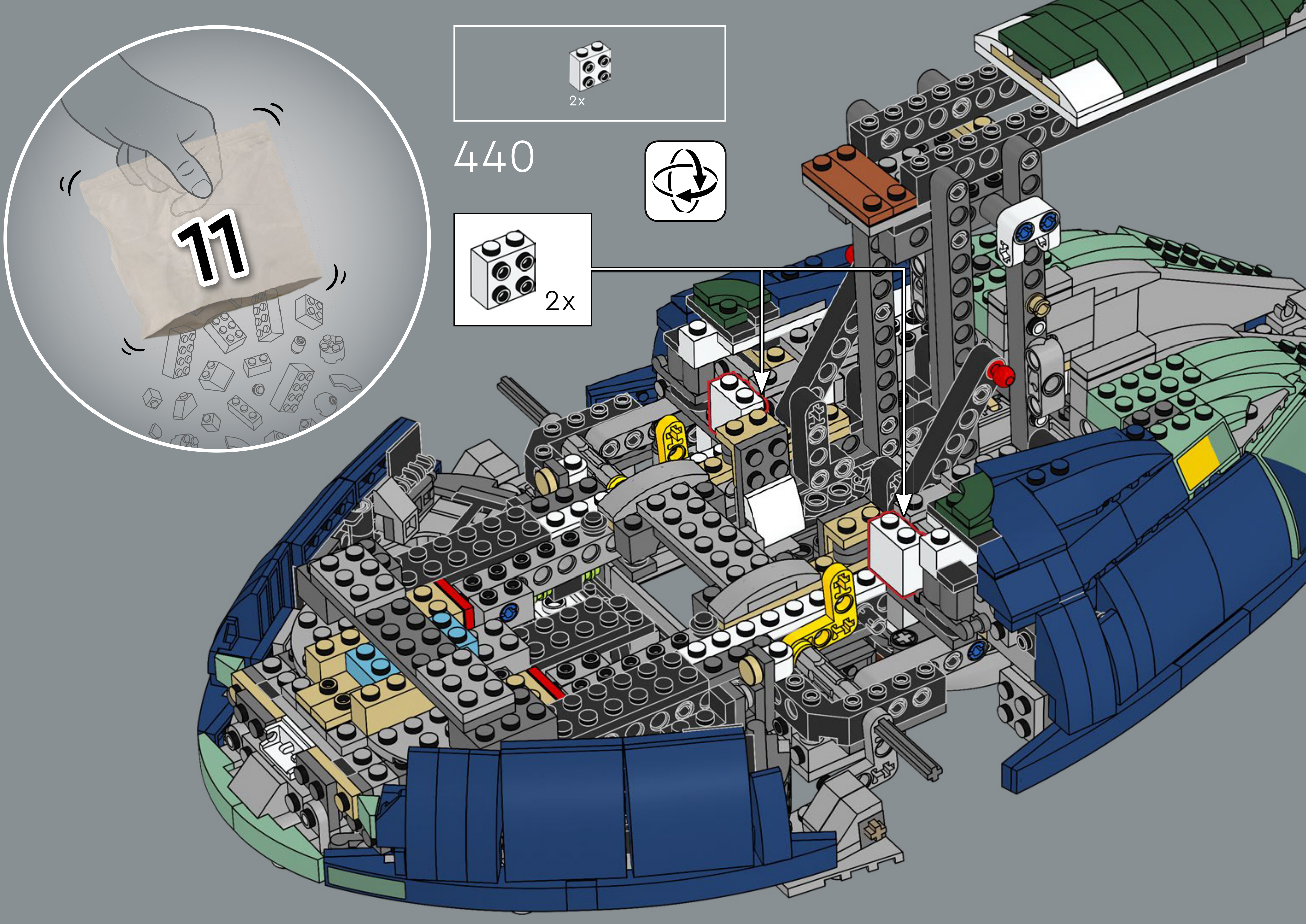

440

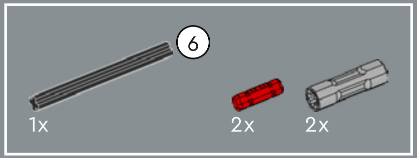

441

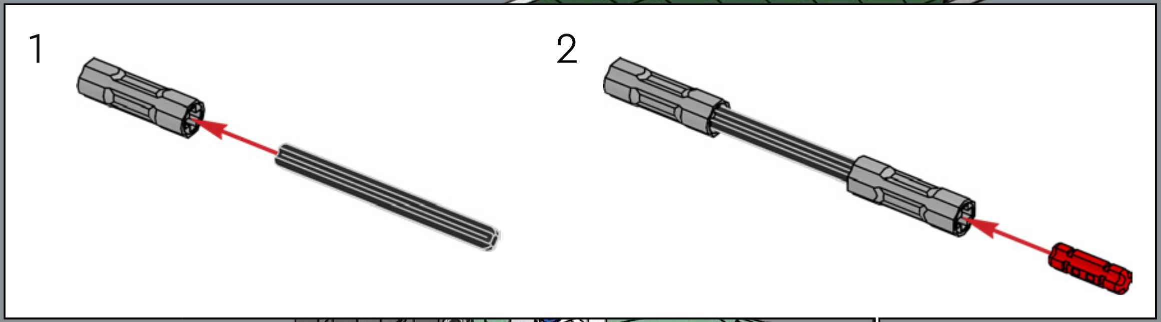

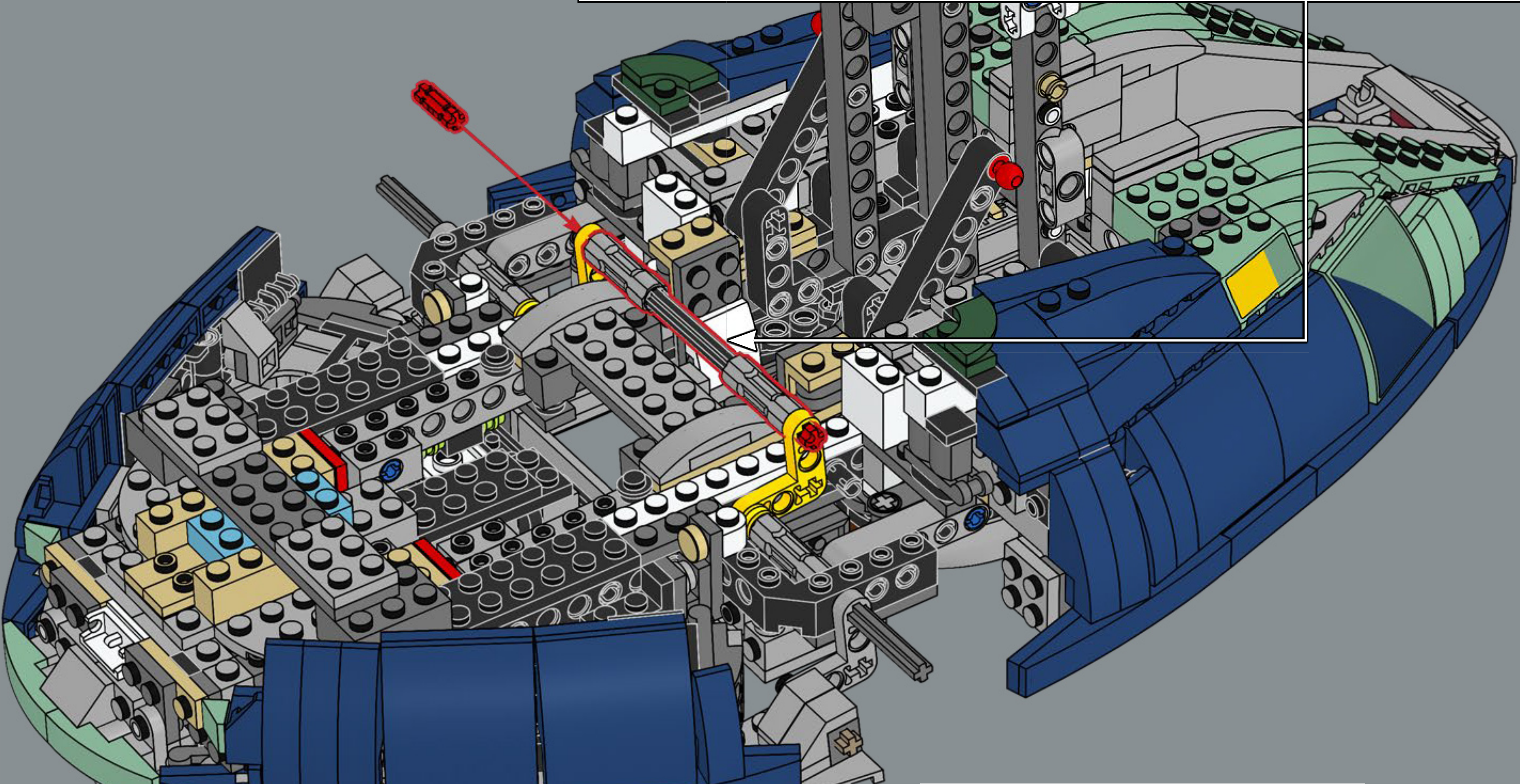

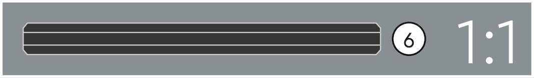

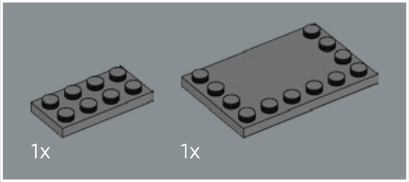

442

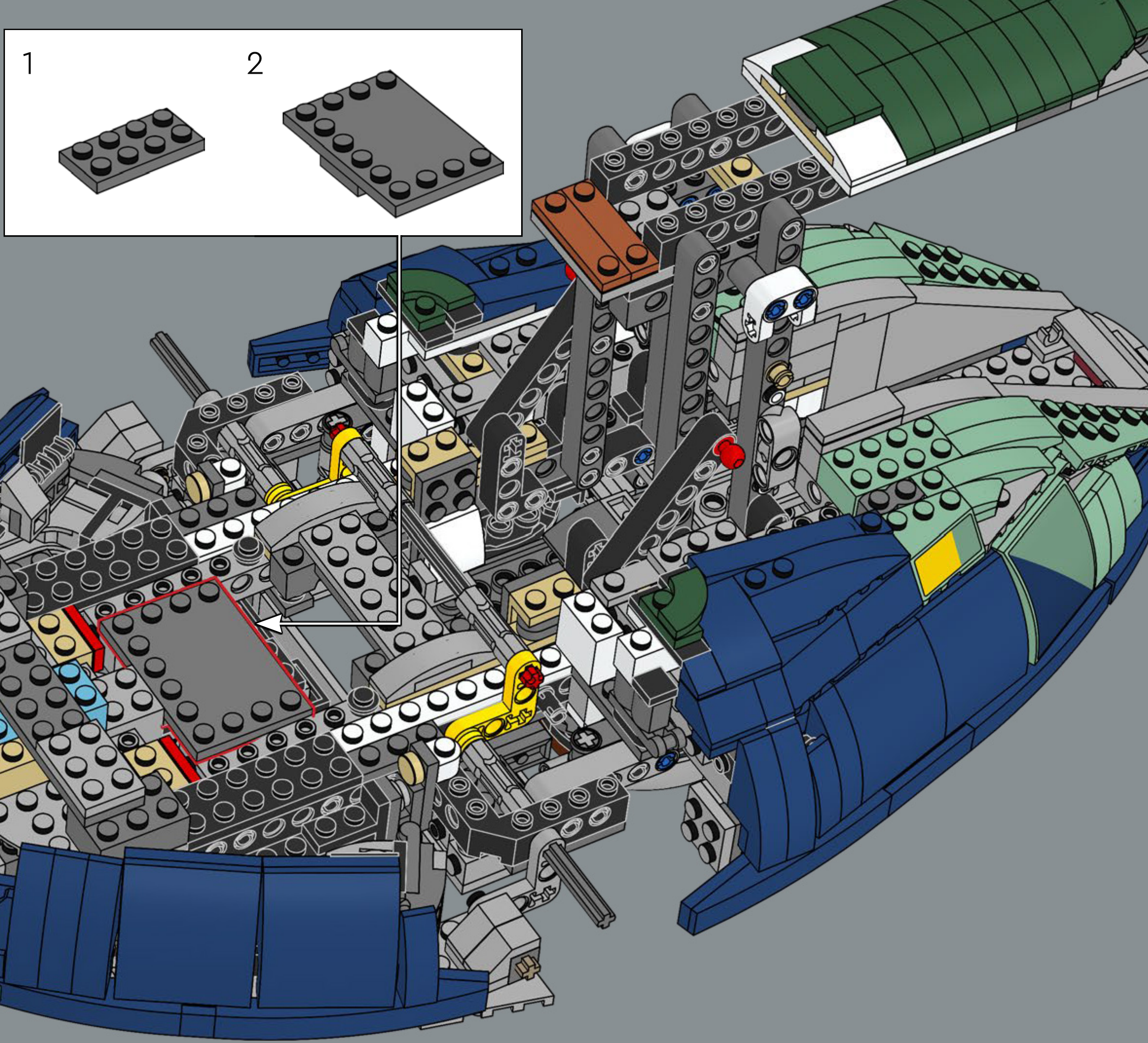

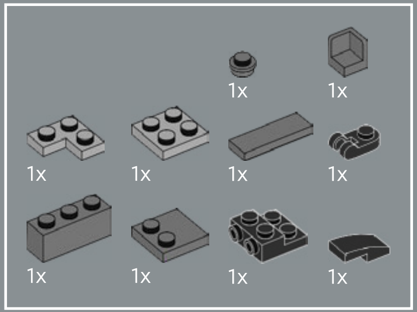
1x
1x
1x
1x
1x
1x
1x
1x
1x
1x

443

2

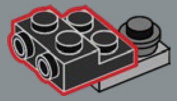

4

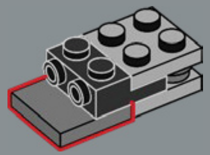

6

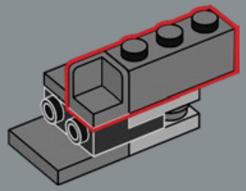

1

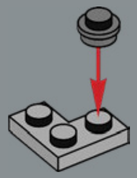

3

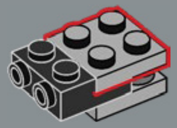

5

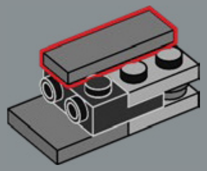

7

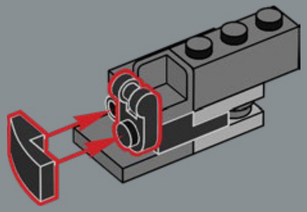

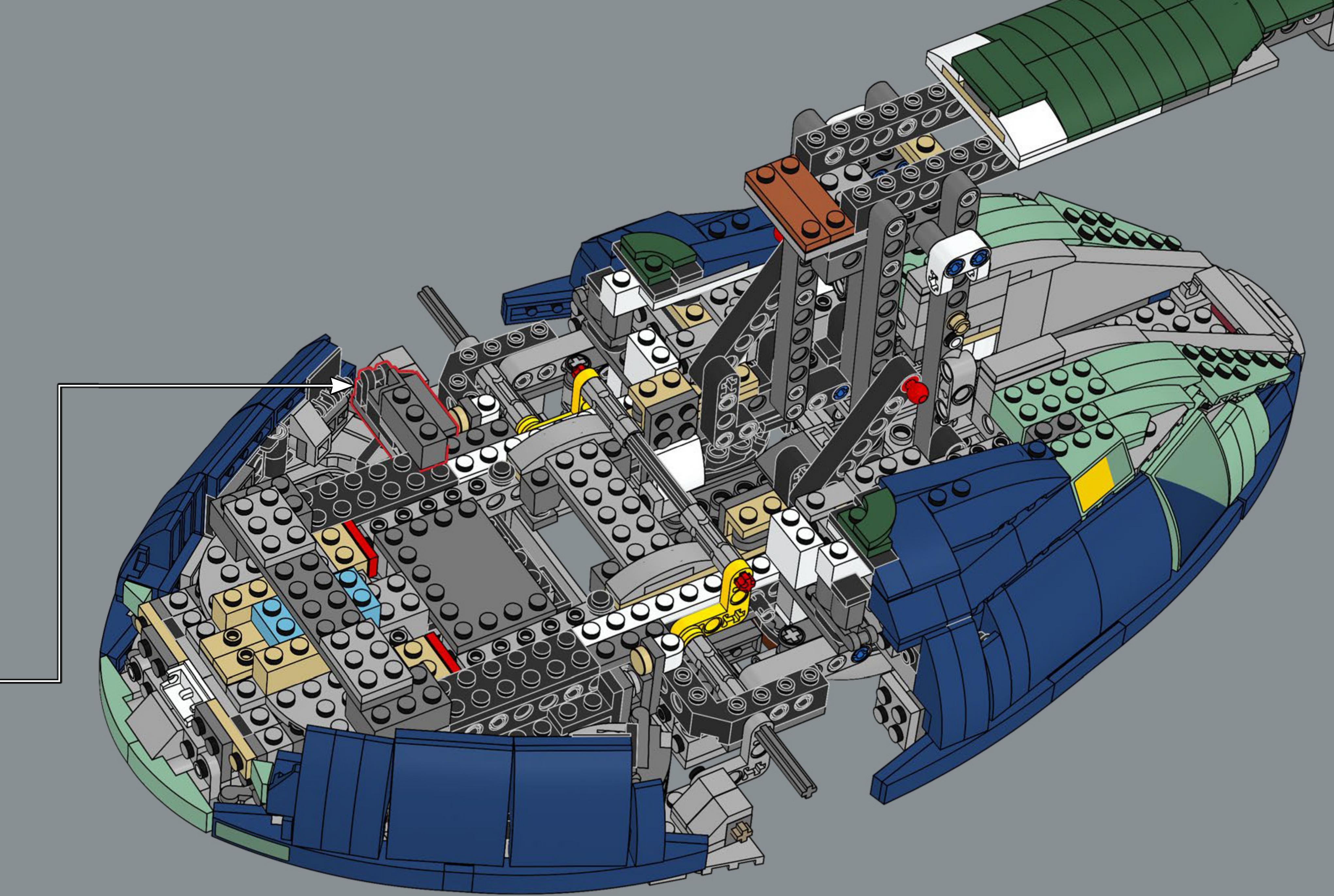

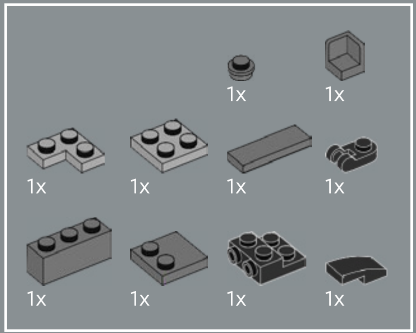
1x
1x
1x
1x
1x
1x
1x
1x
1x
1x

444

1

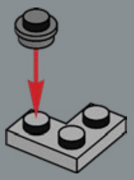

2

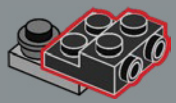

3

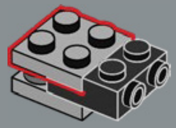

4

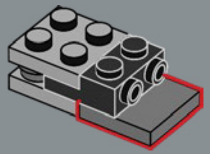

5

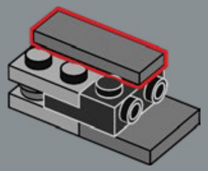

6

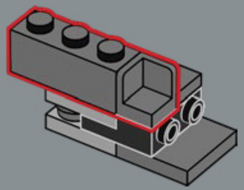

7

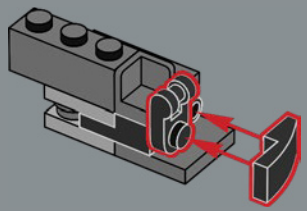

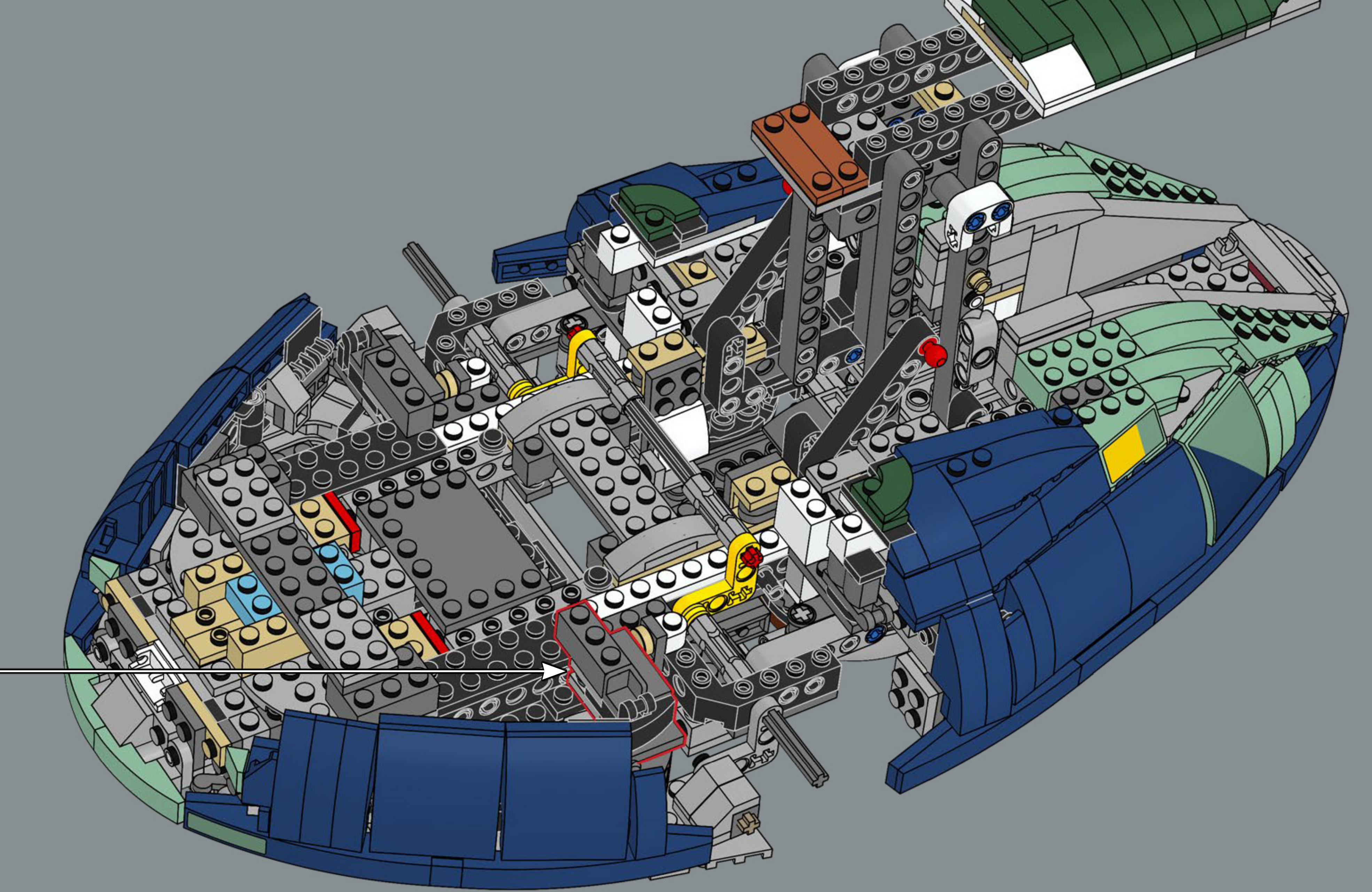

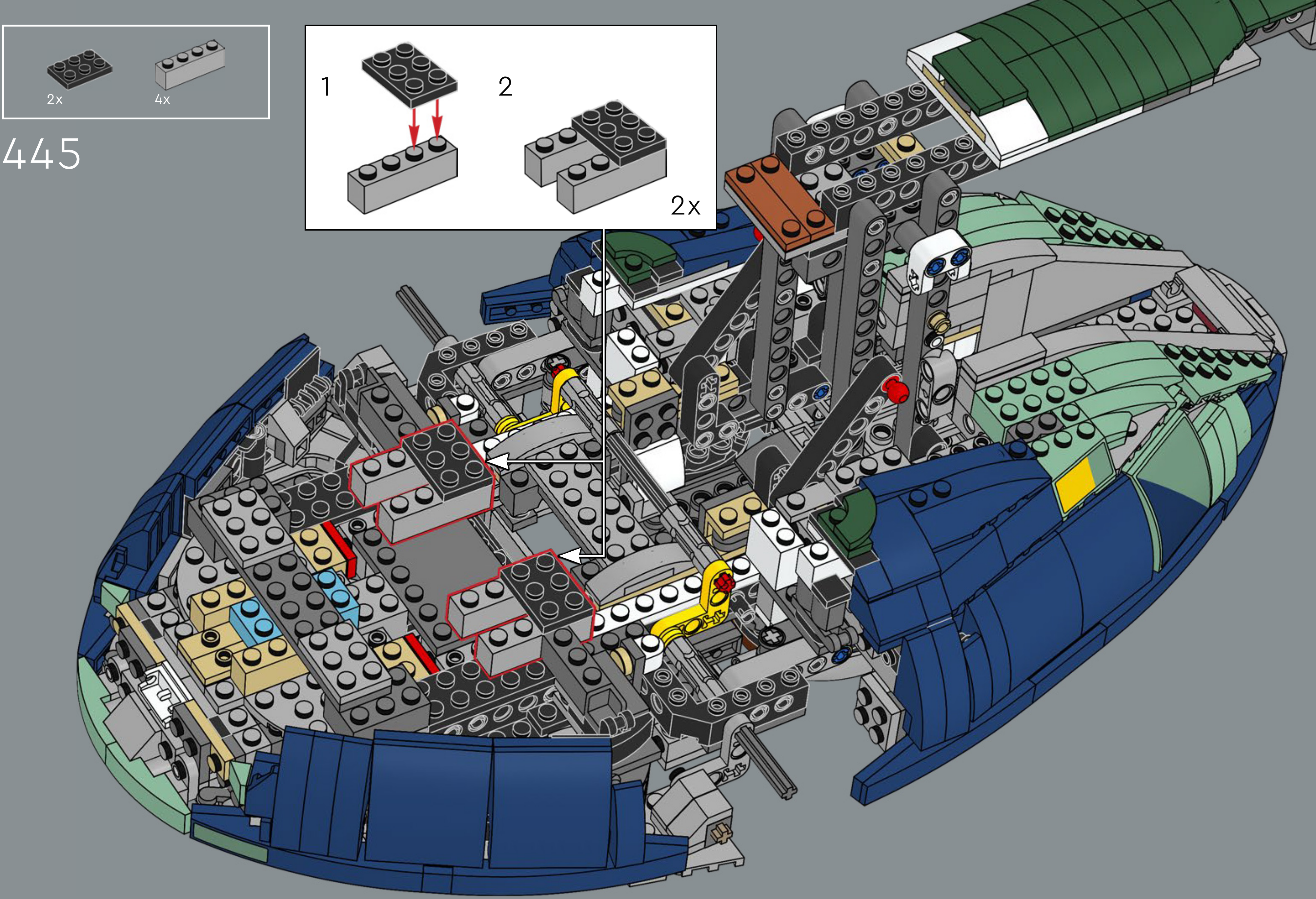

445

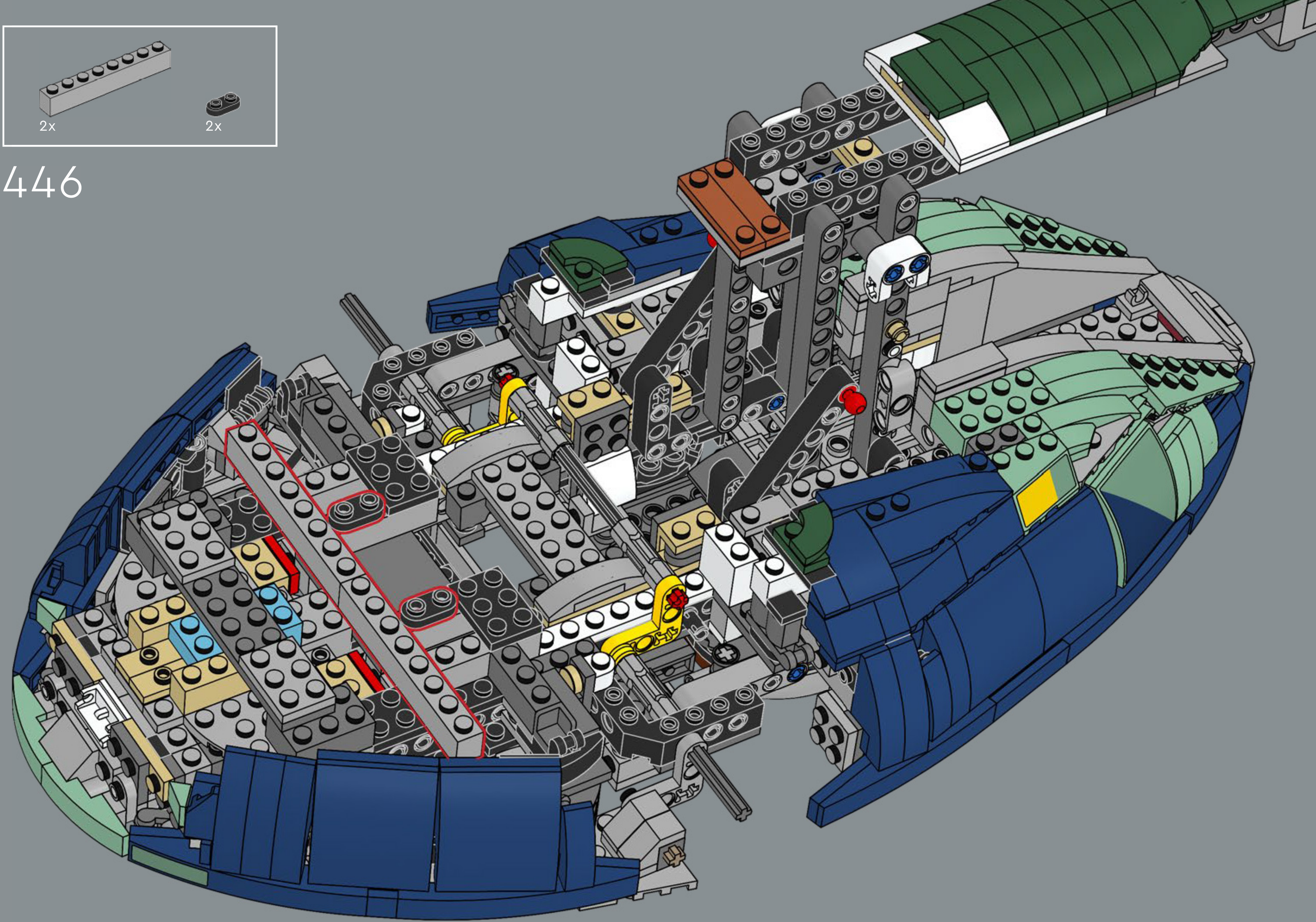

446

447

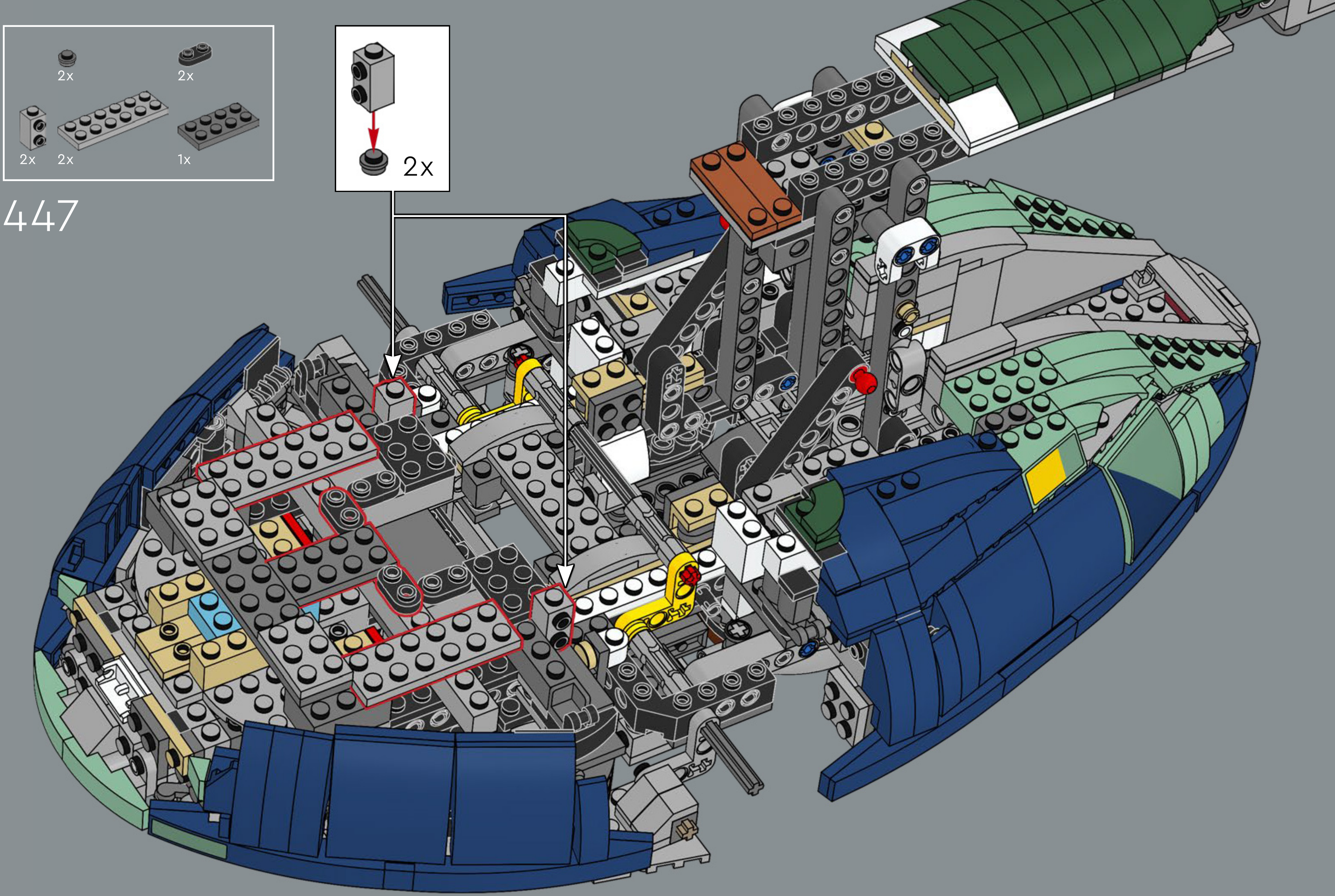
2x
2x
2x
2x
1x
2x

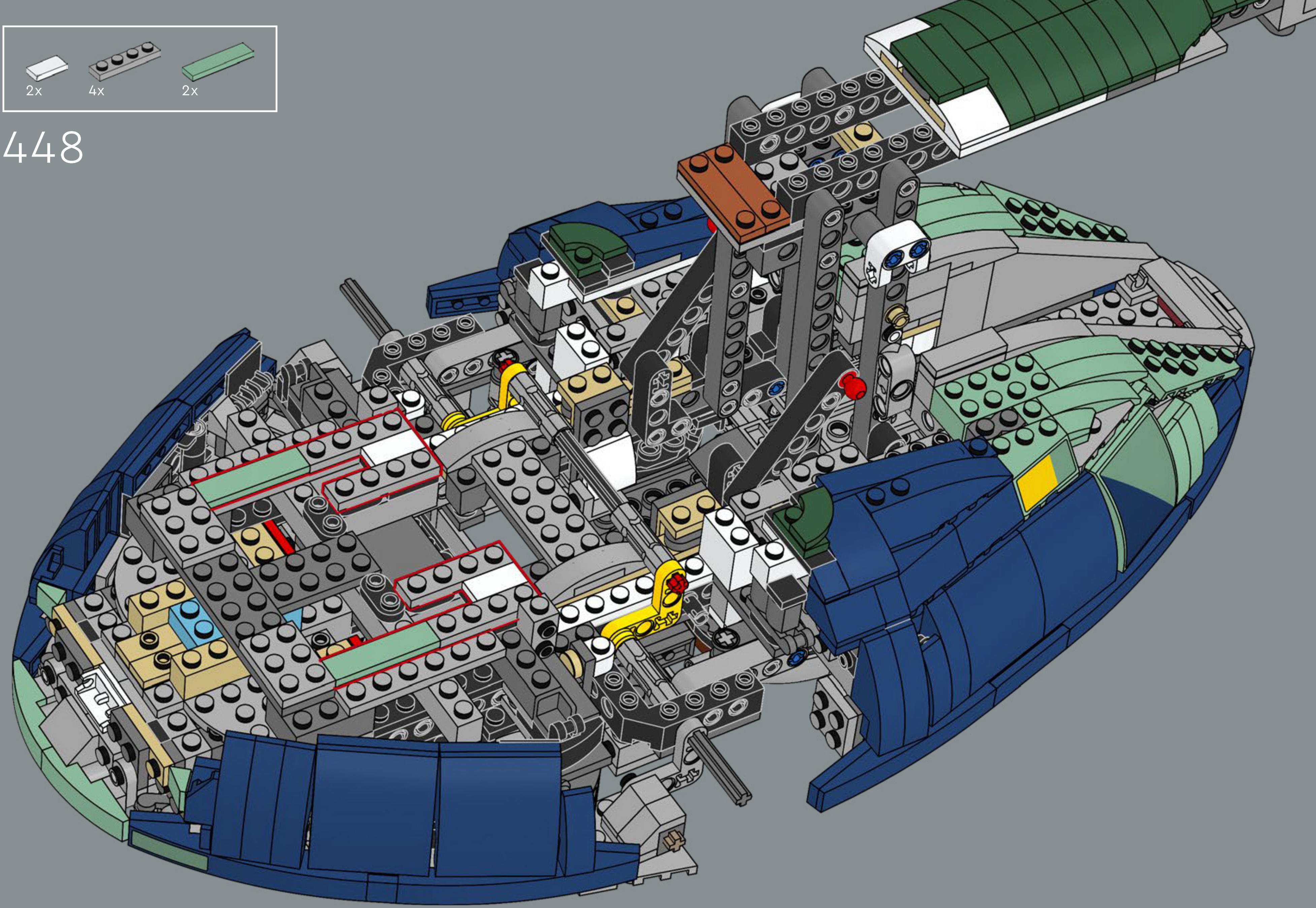

448

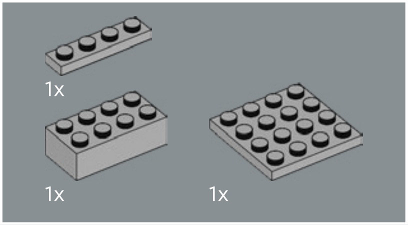

449

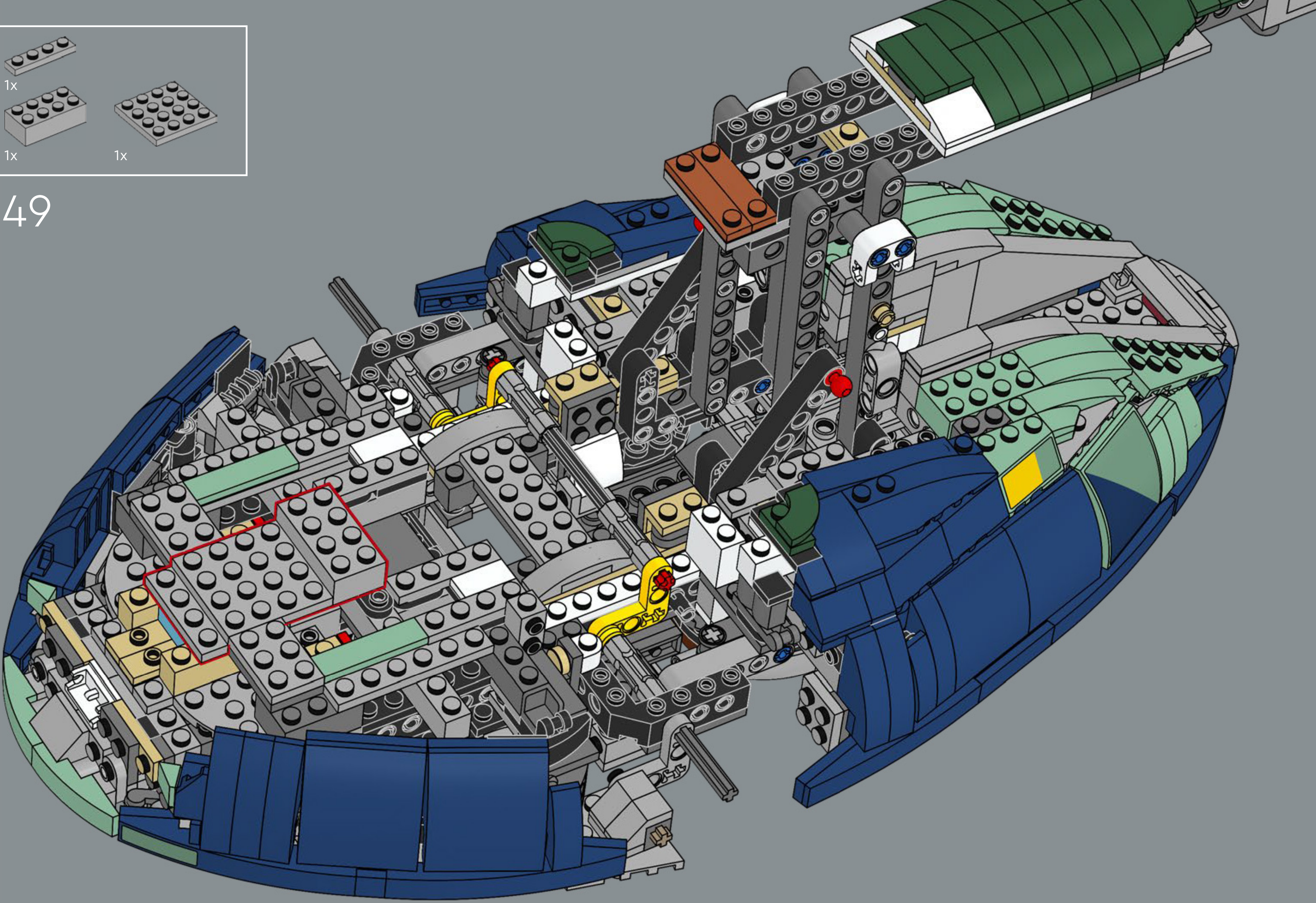

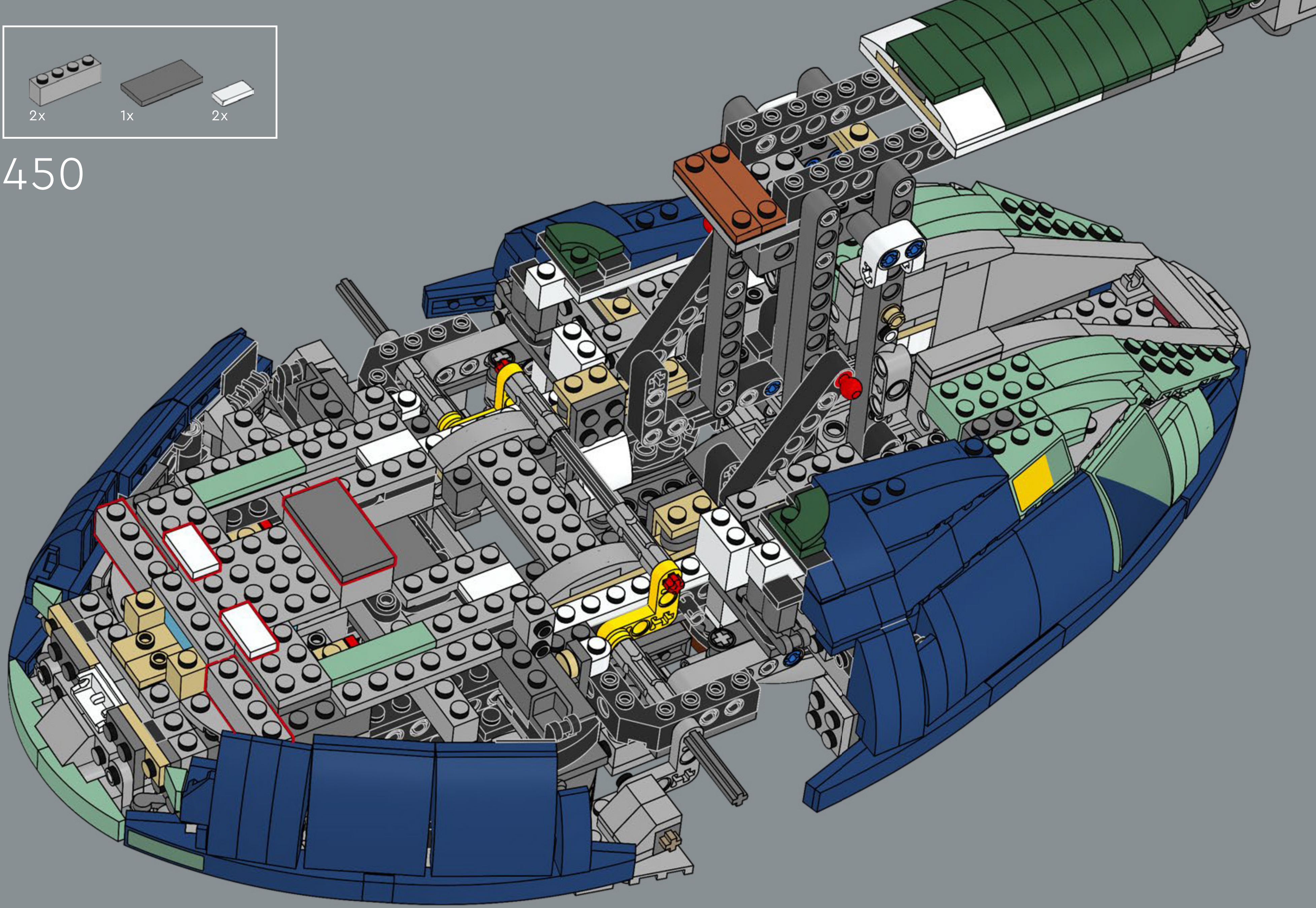

450

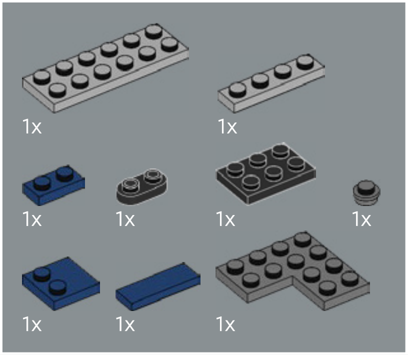
1x
1x
1x
1x
1x
1x
1x
1x
1x

451

1

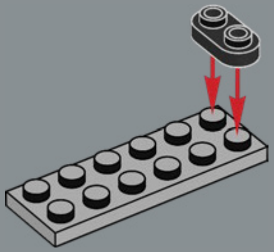

2

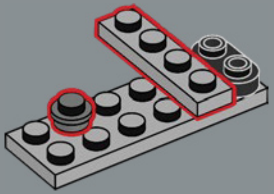

3

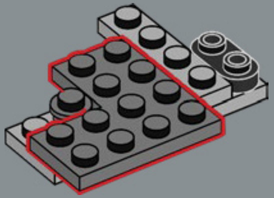

4

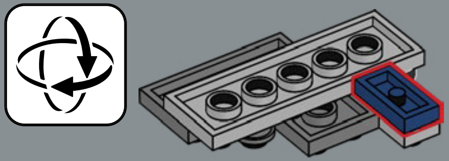

5

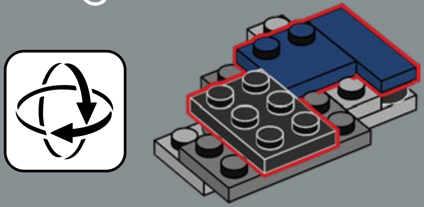

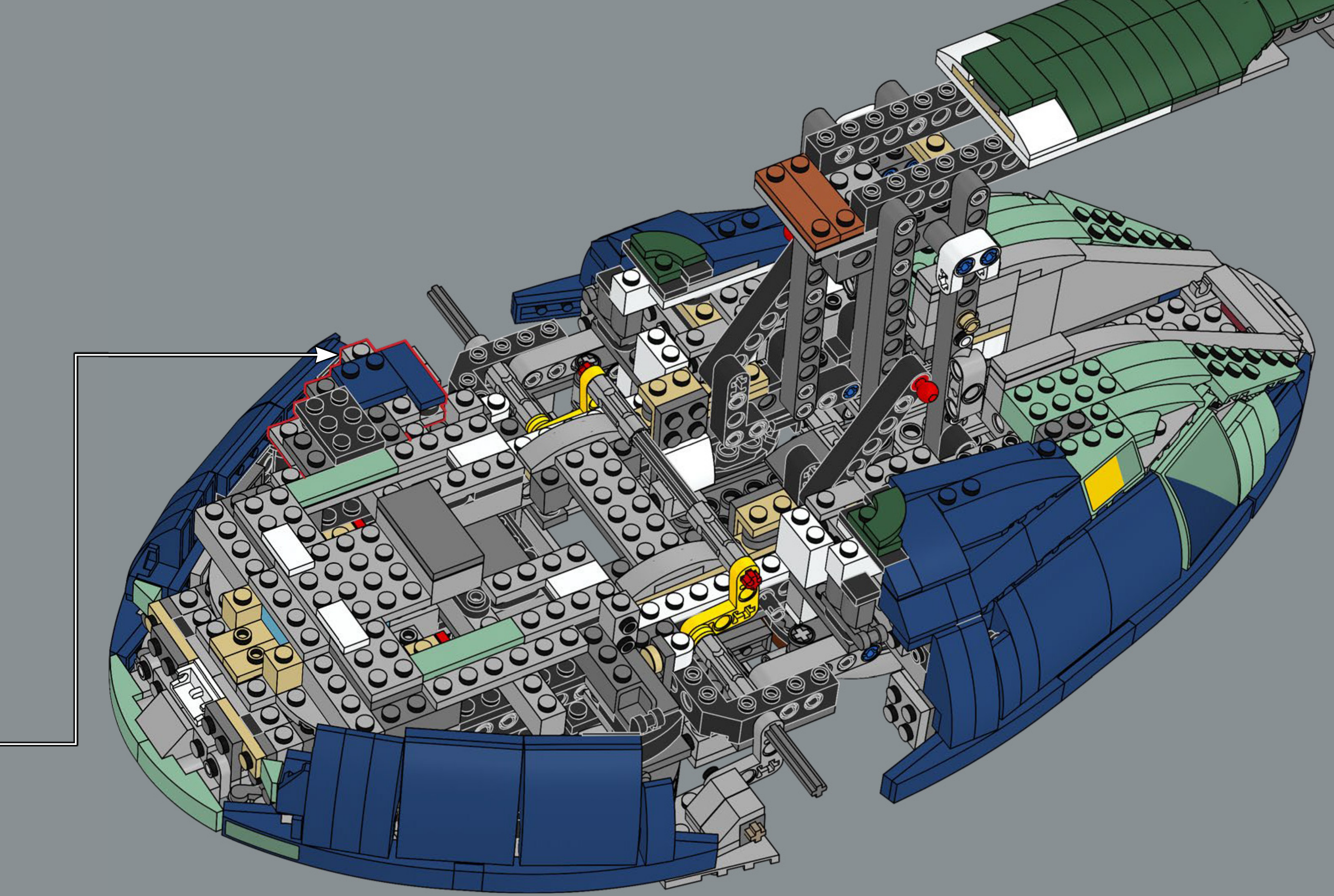

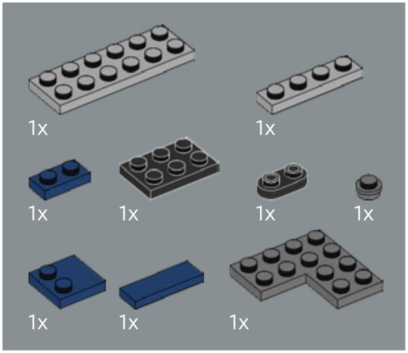
1x
1x
1x
1x
1x
1x
1x
1x
1x

452

1

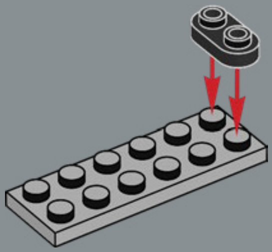

2

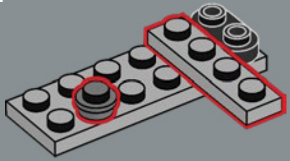

3

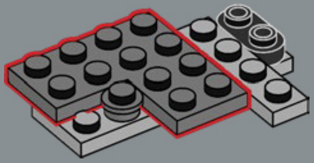

4

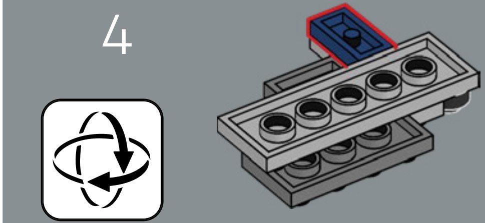

5

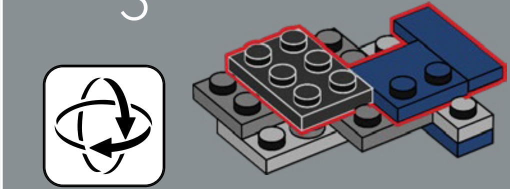

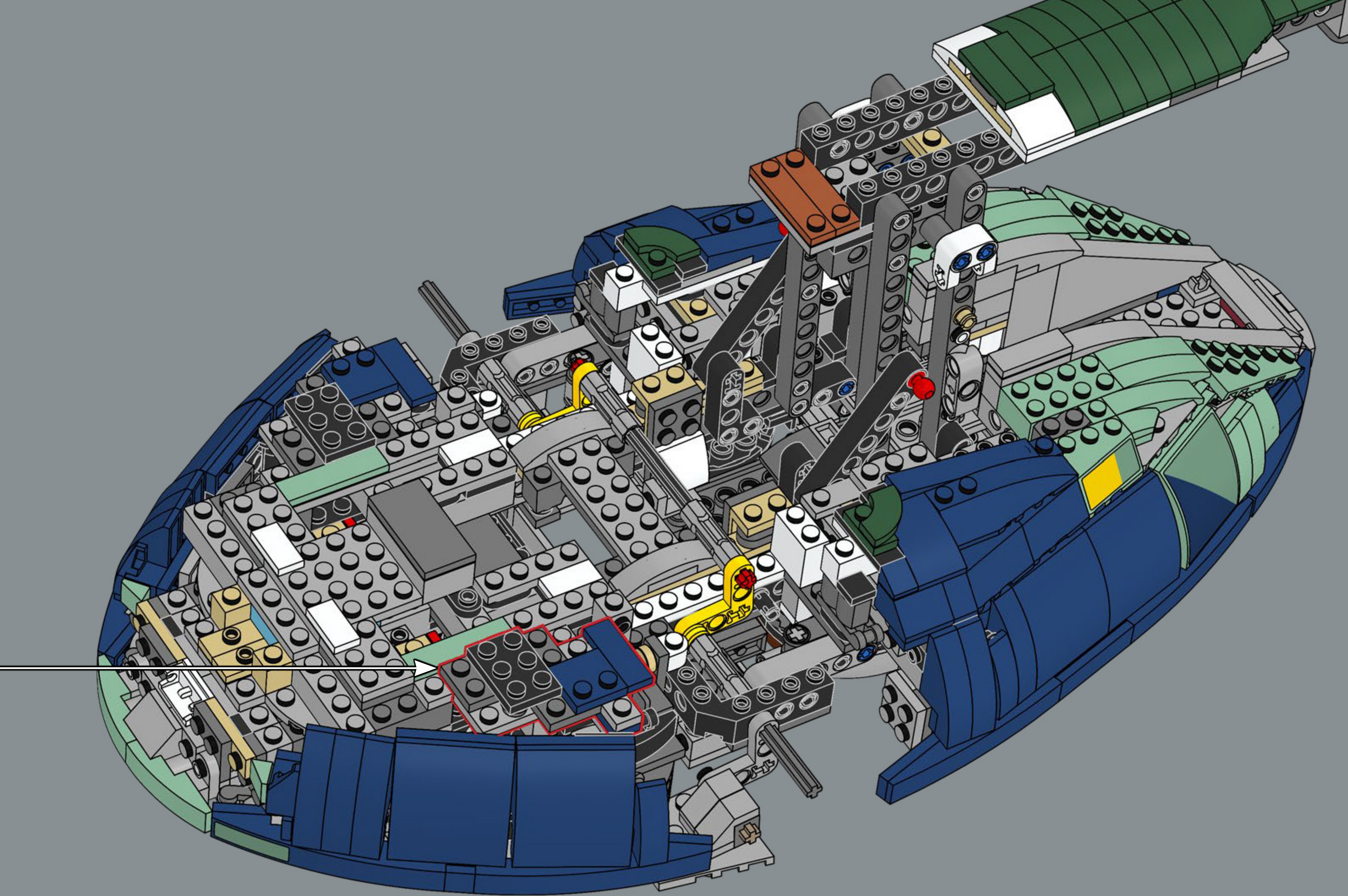

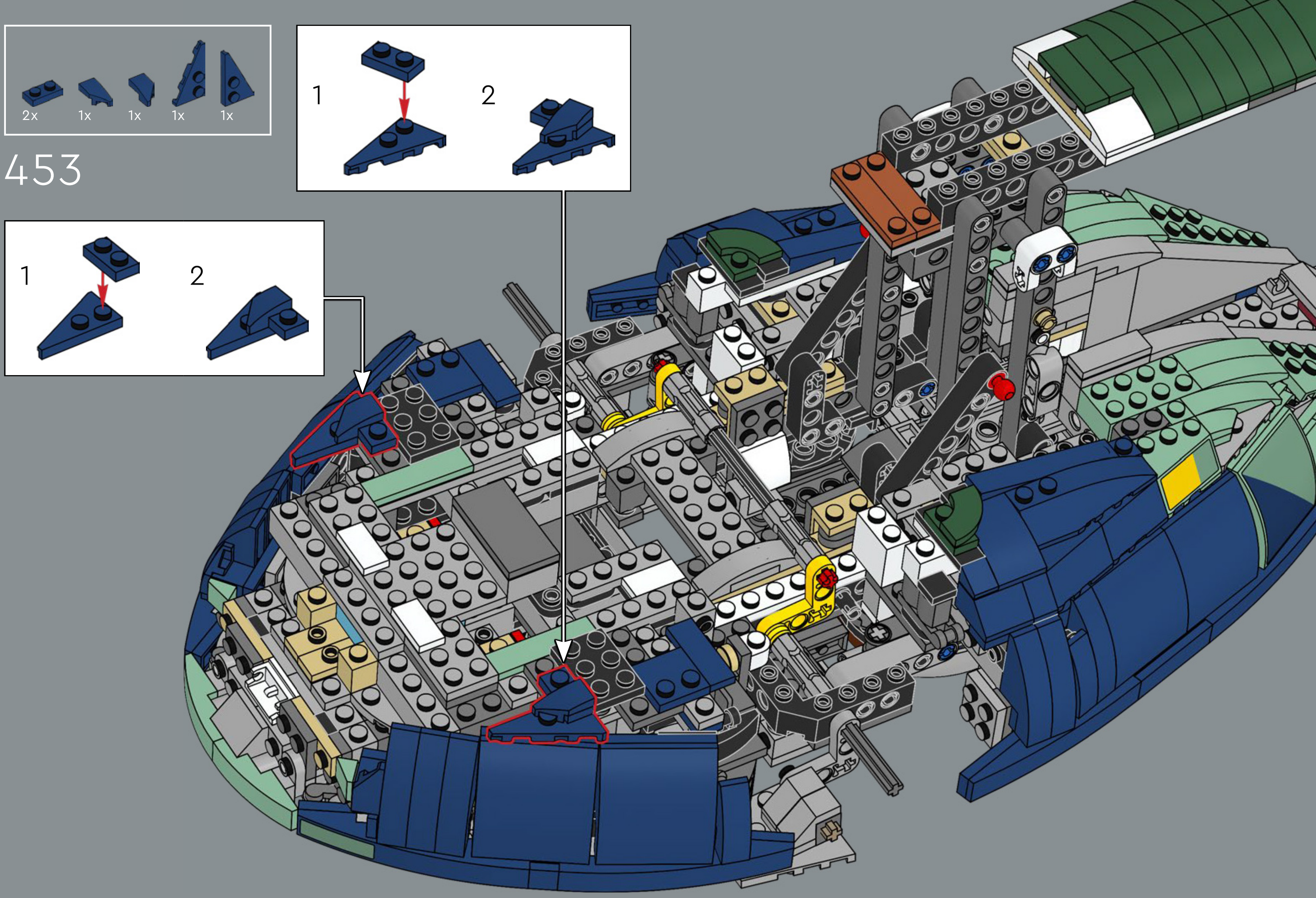
2x
1x
1x
1x
1x
453
1
2
1
2

454

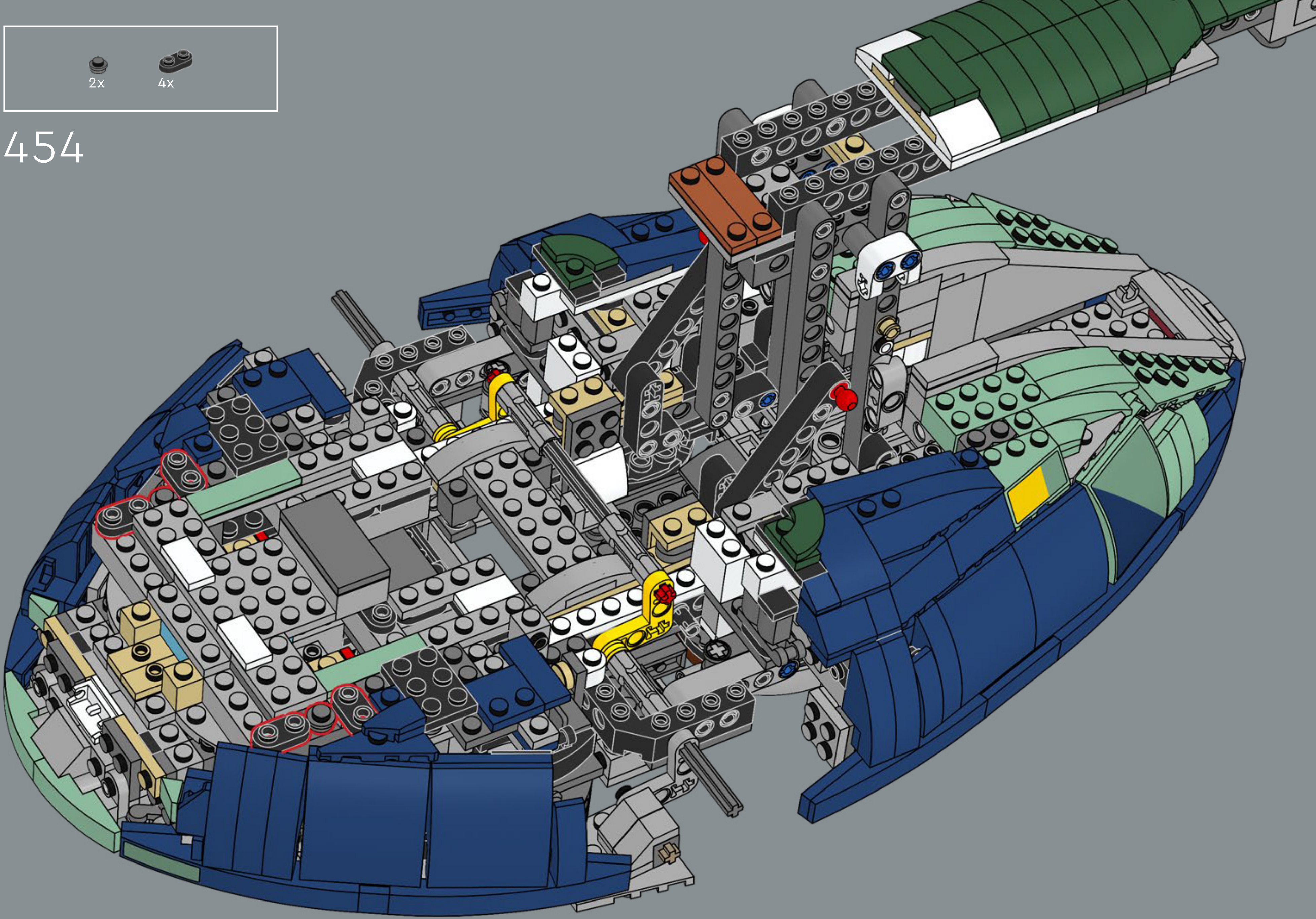

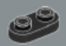
2x

455

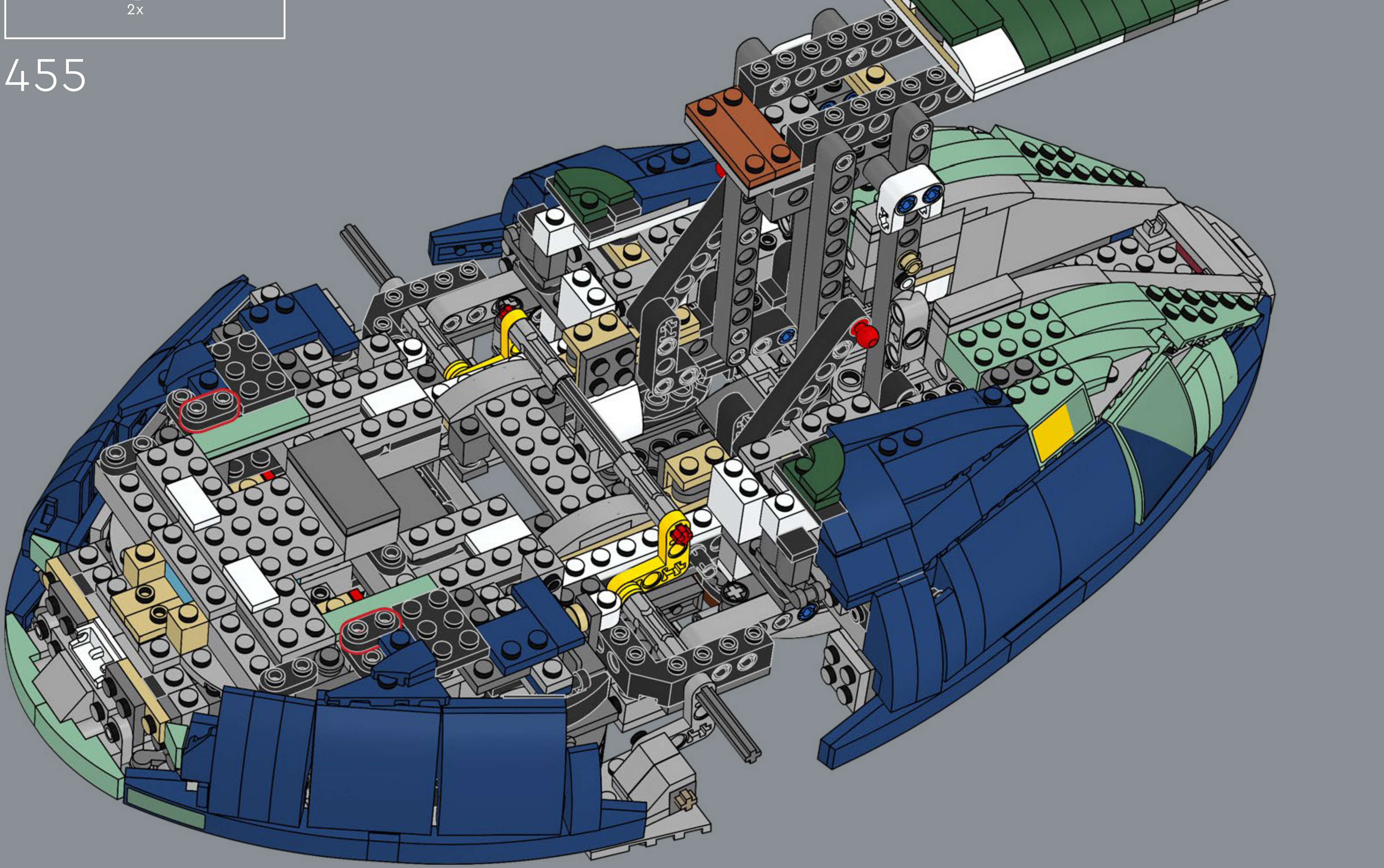

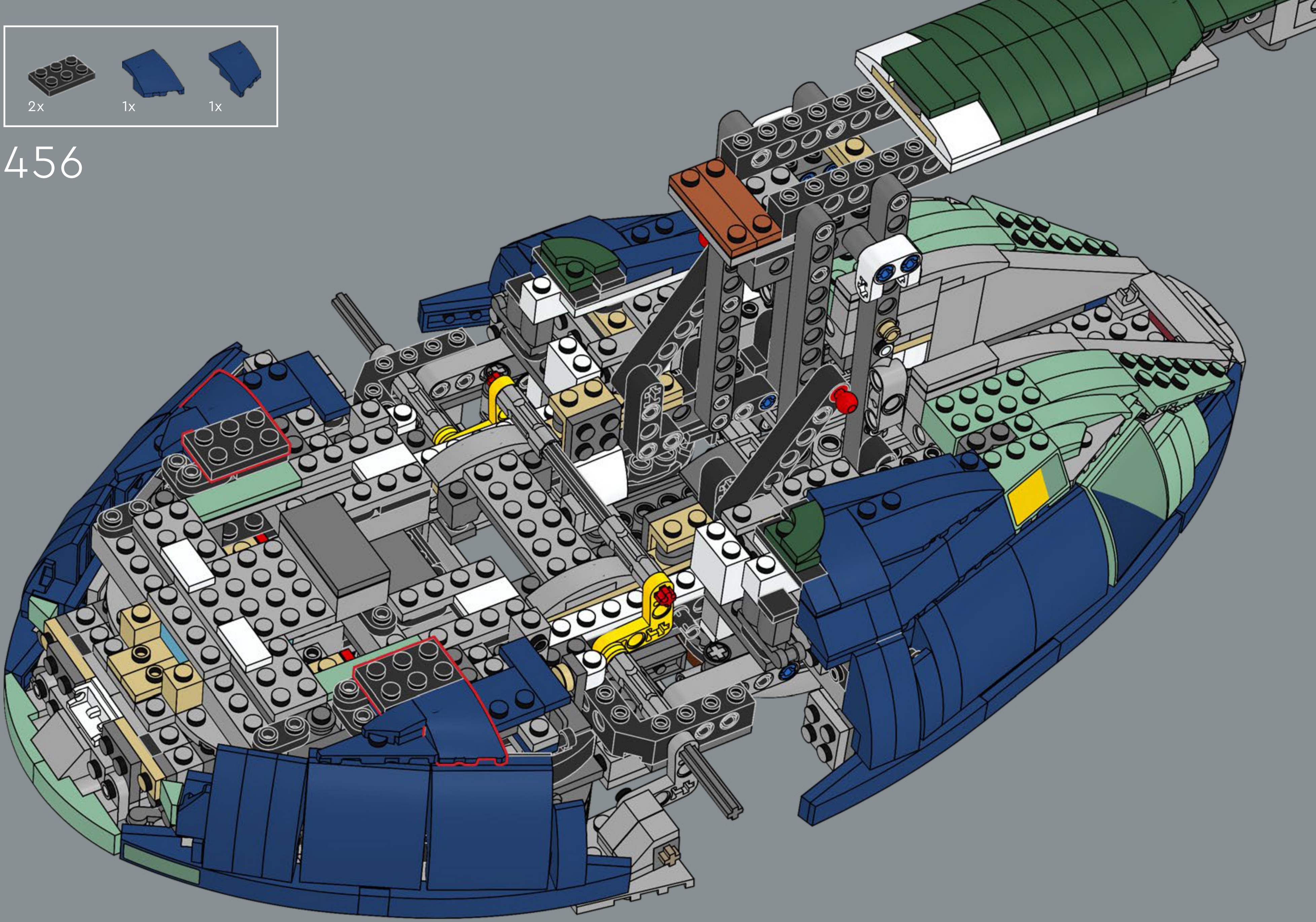

456

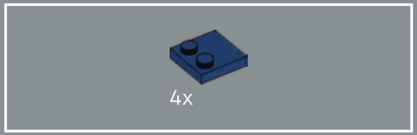

457

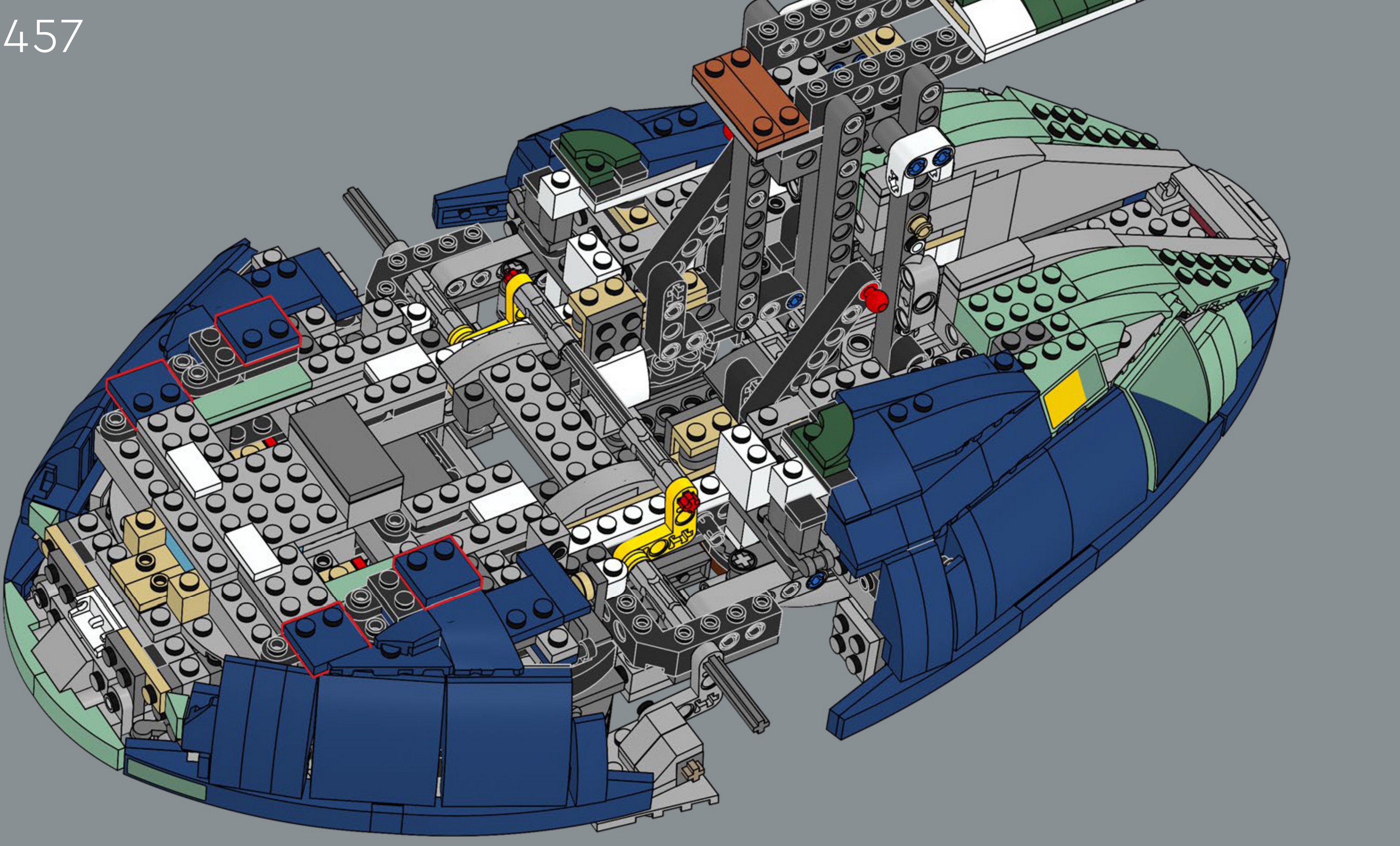

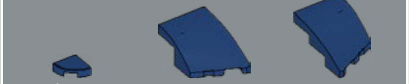

458

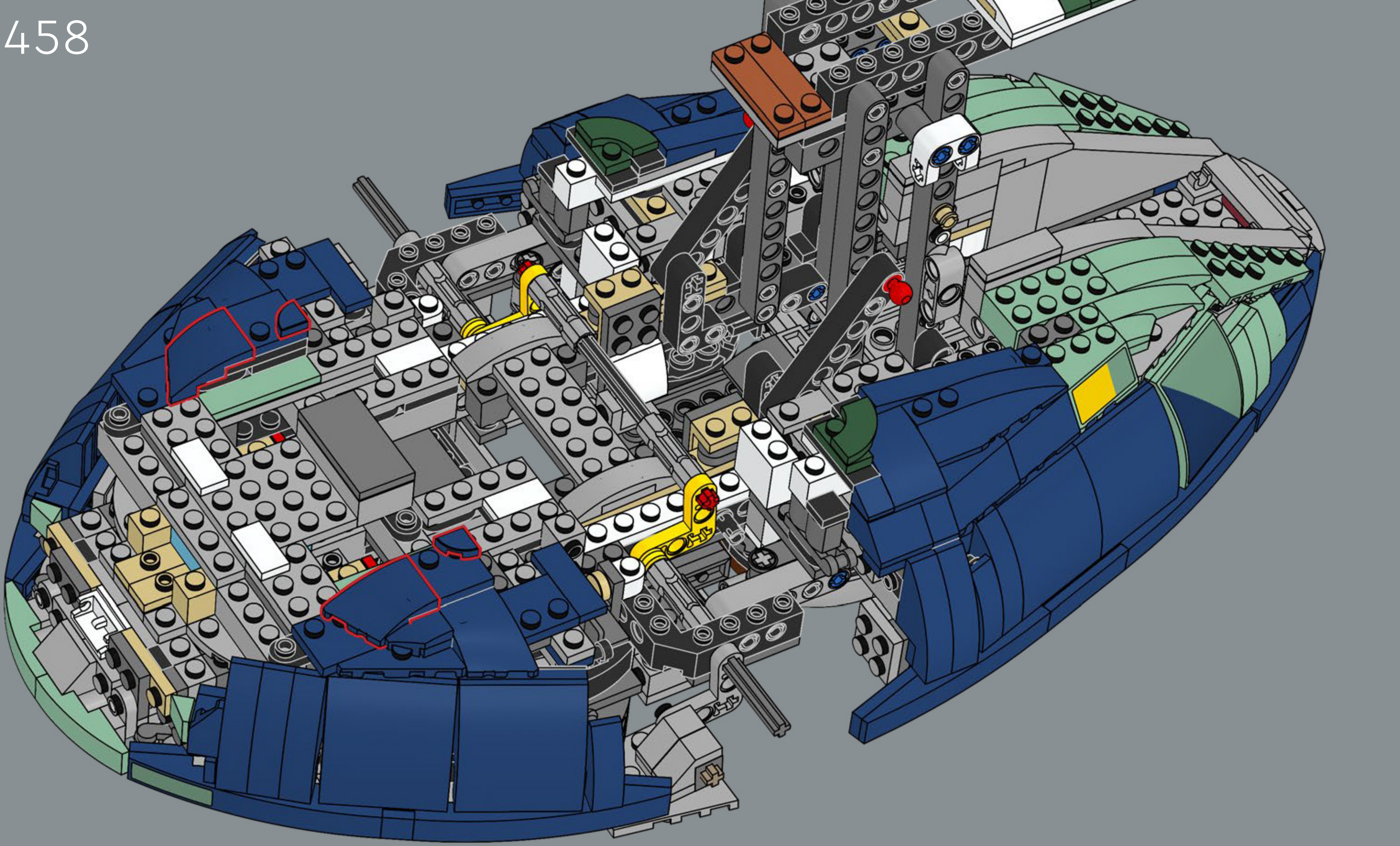

459

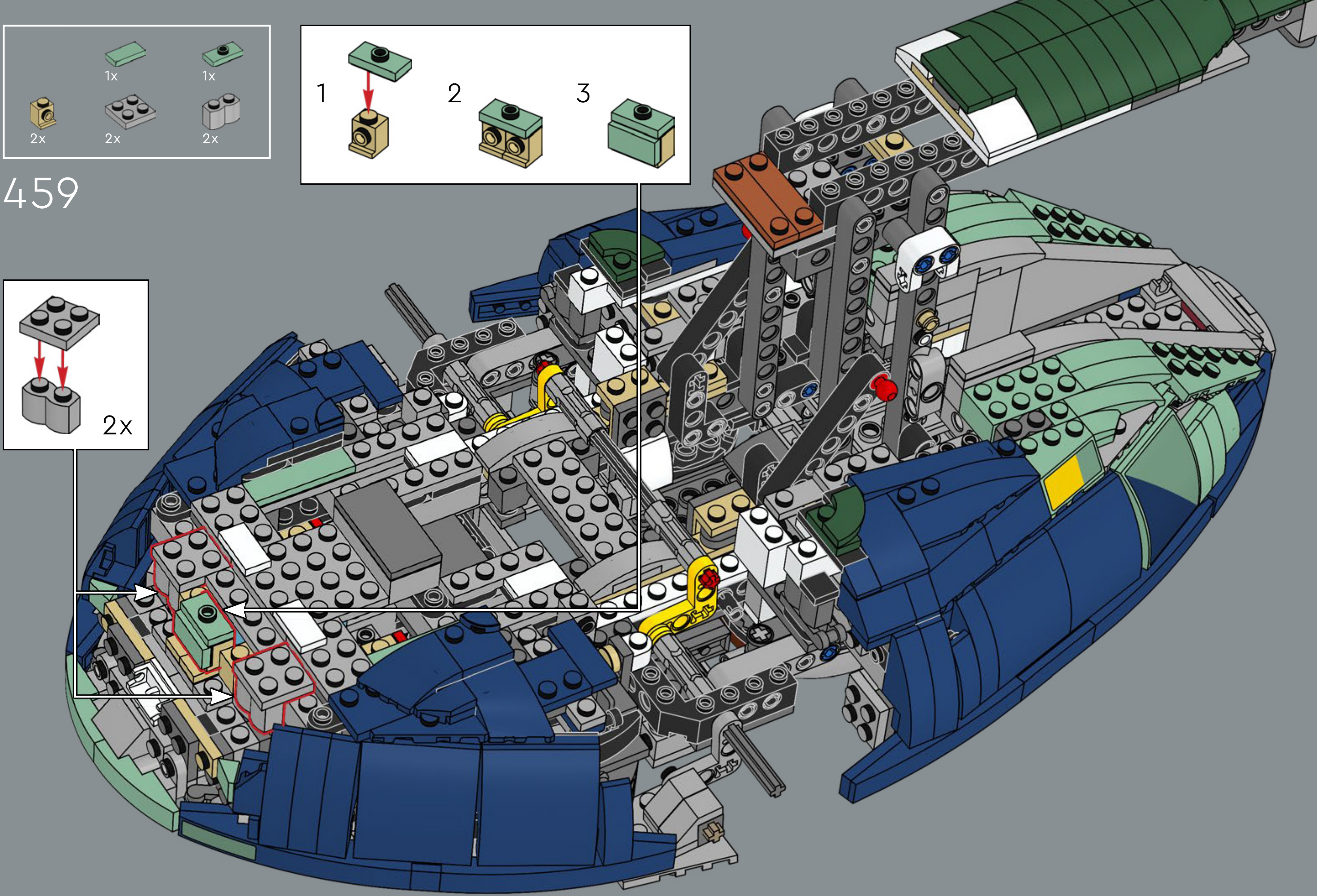
1x
1x
2x
2x
2x
1
2
3
2x

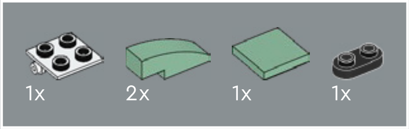

460

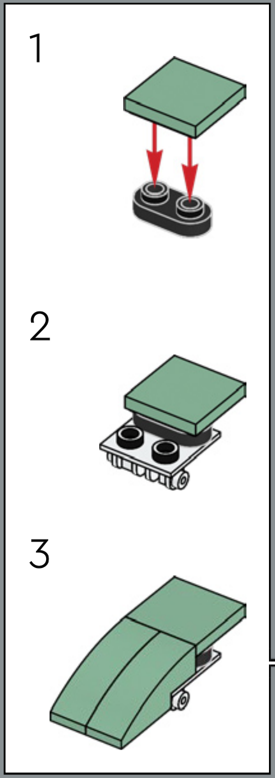

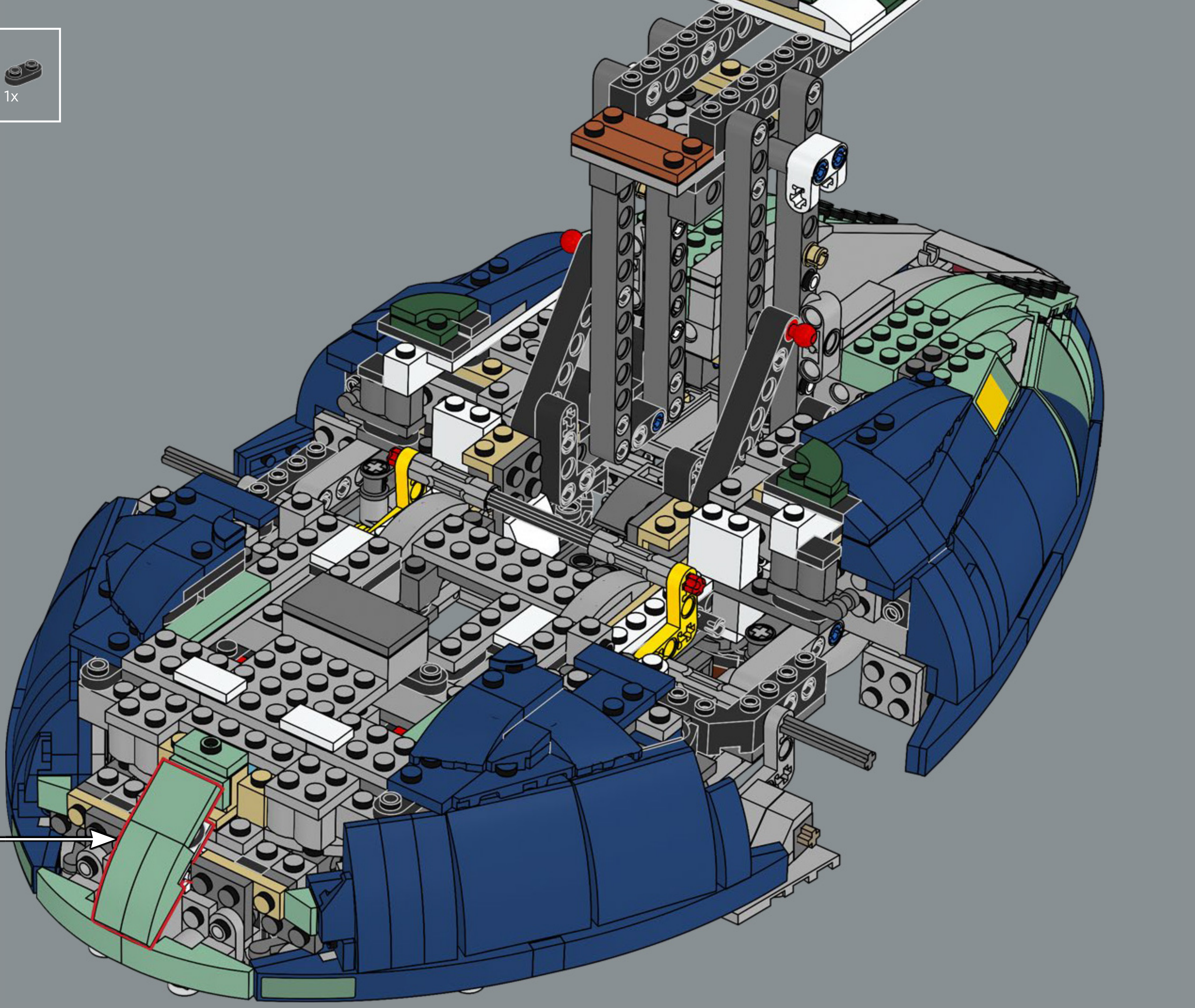

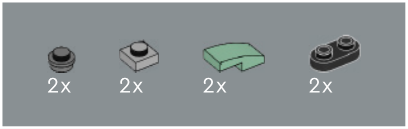

461

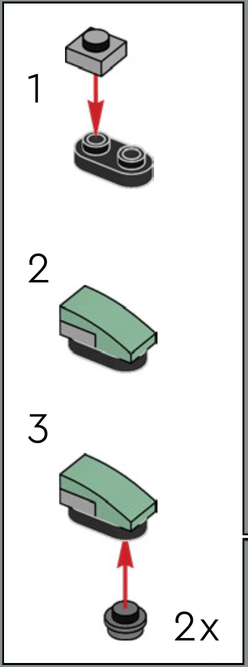

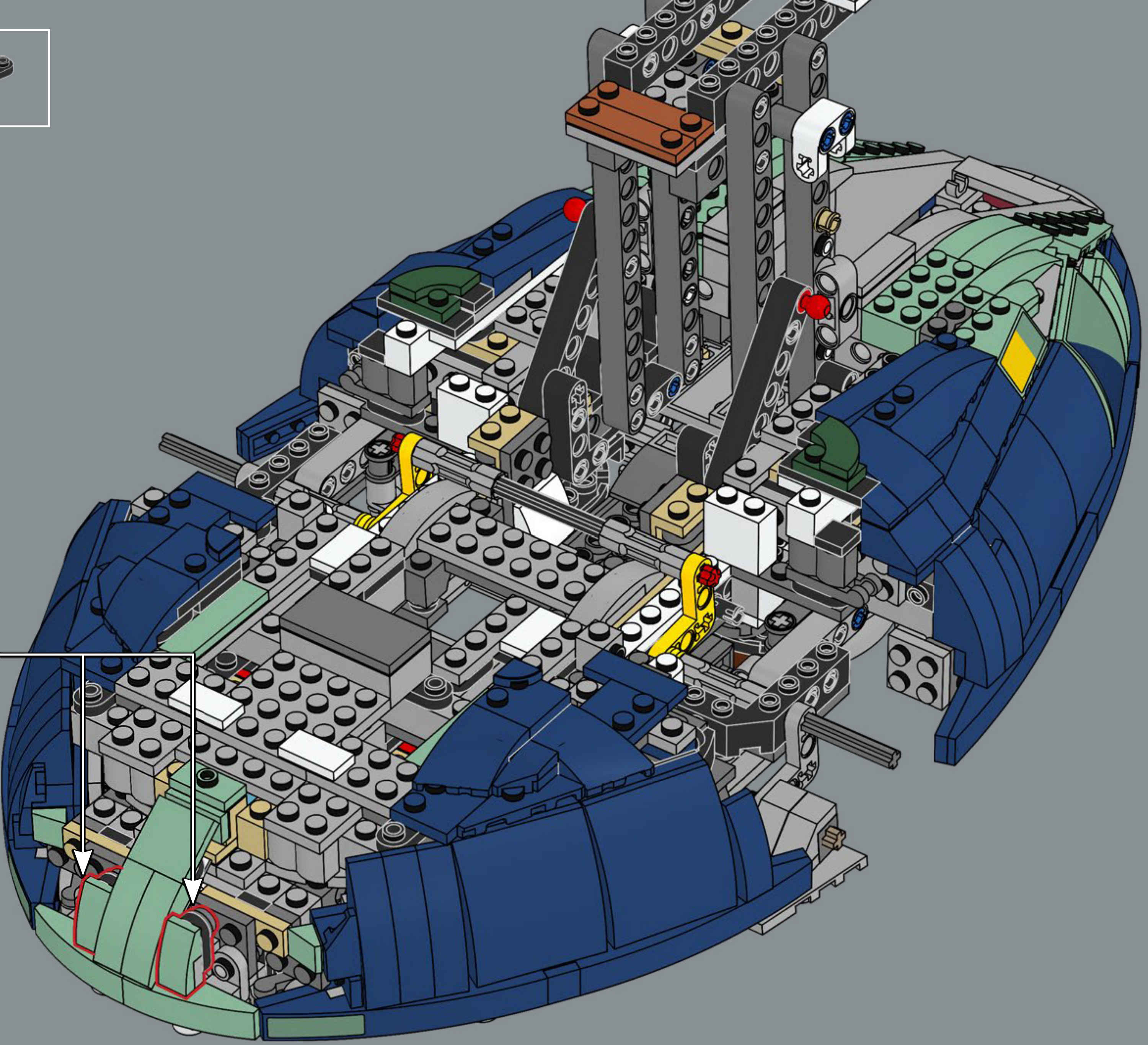

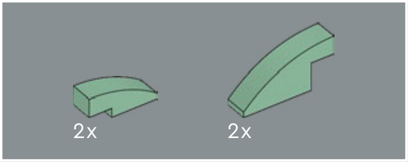

462

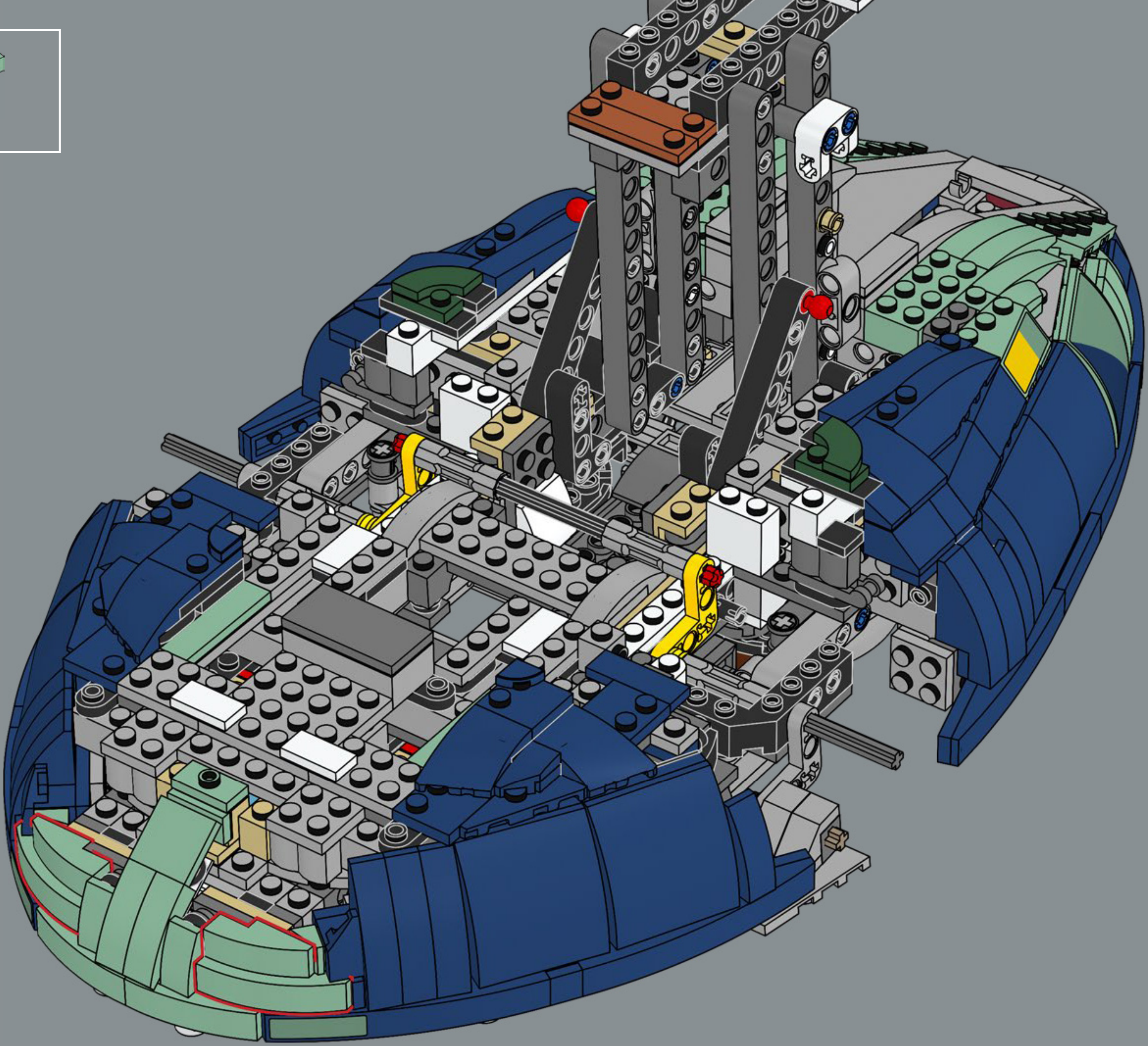

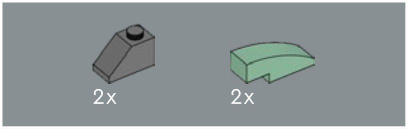

463

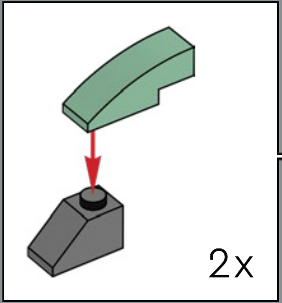

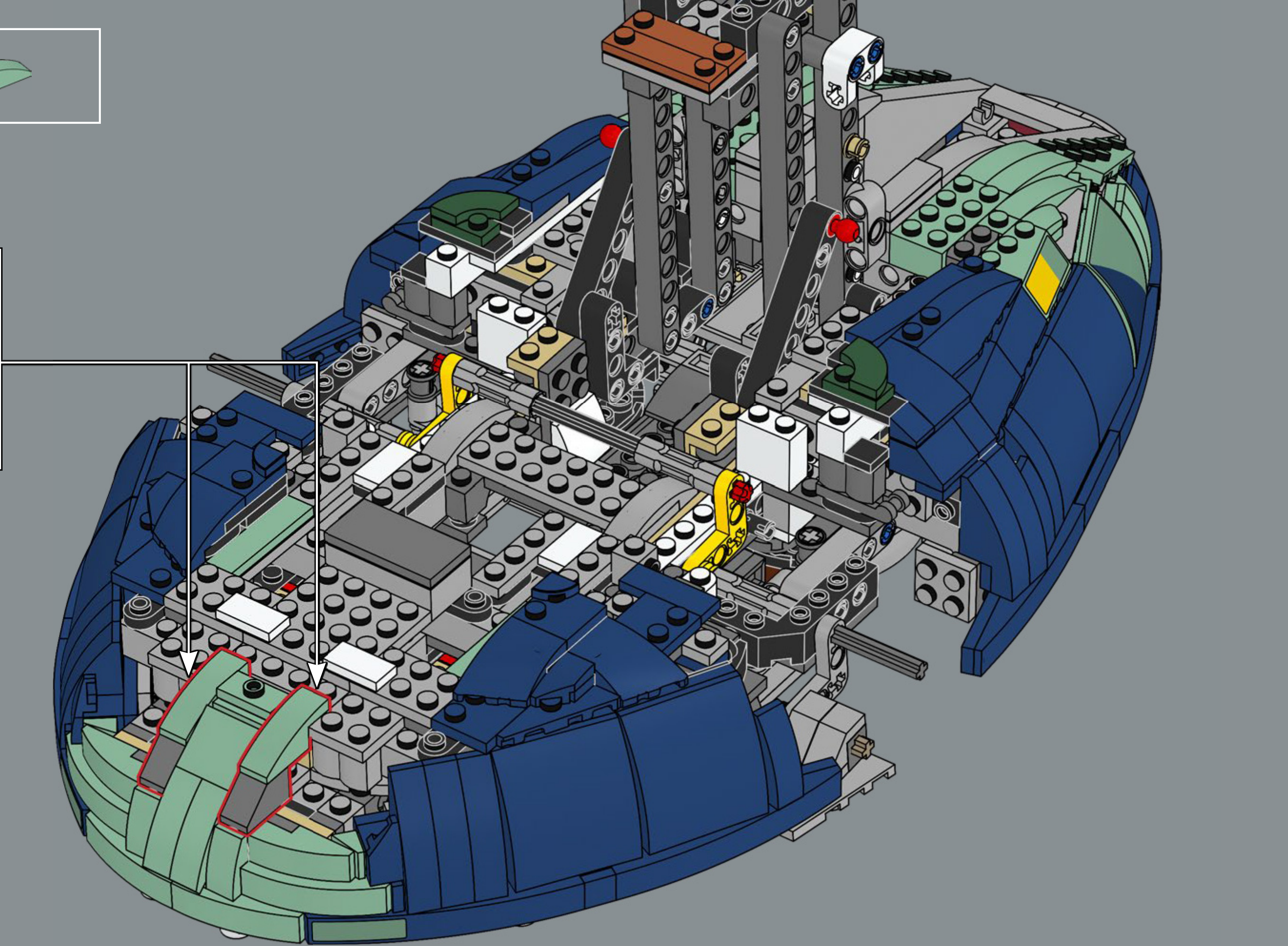

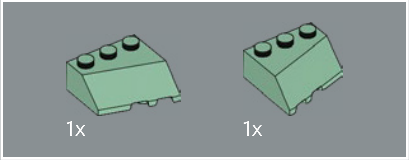

464

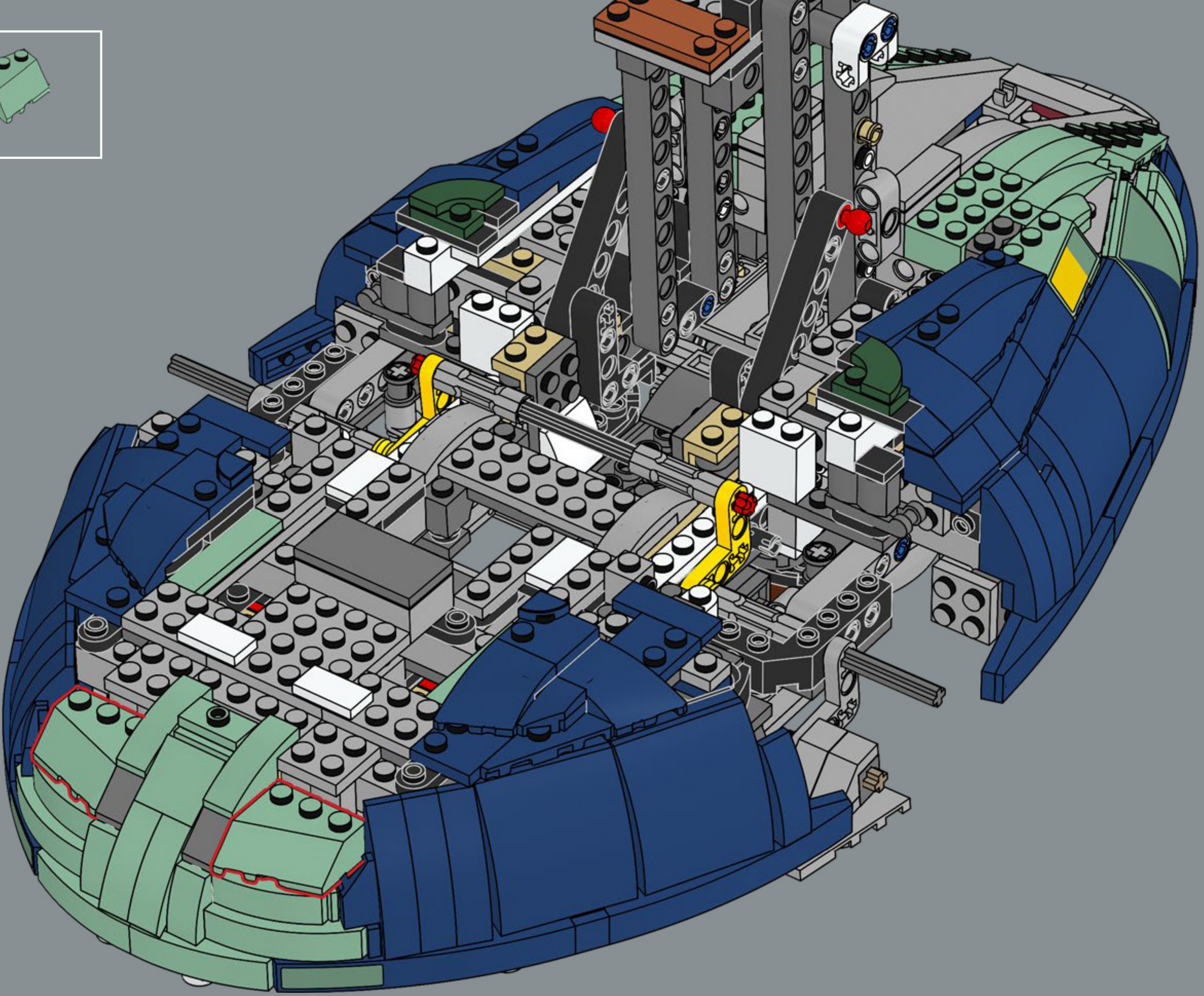

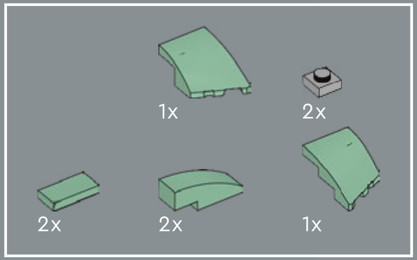
1x
2x
2x
2x
1x

465

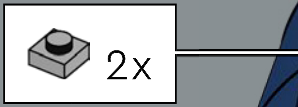

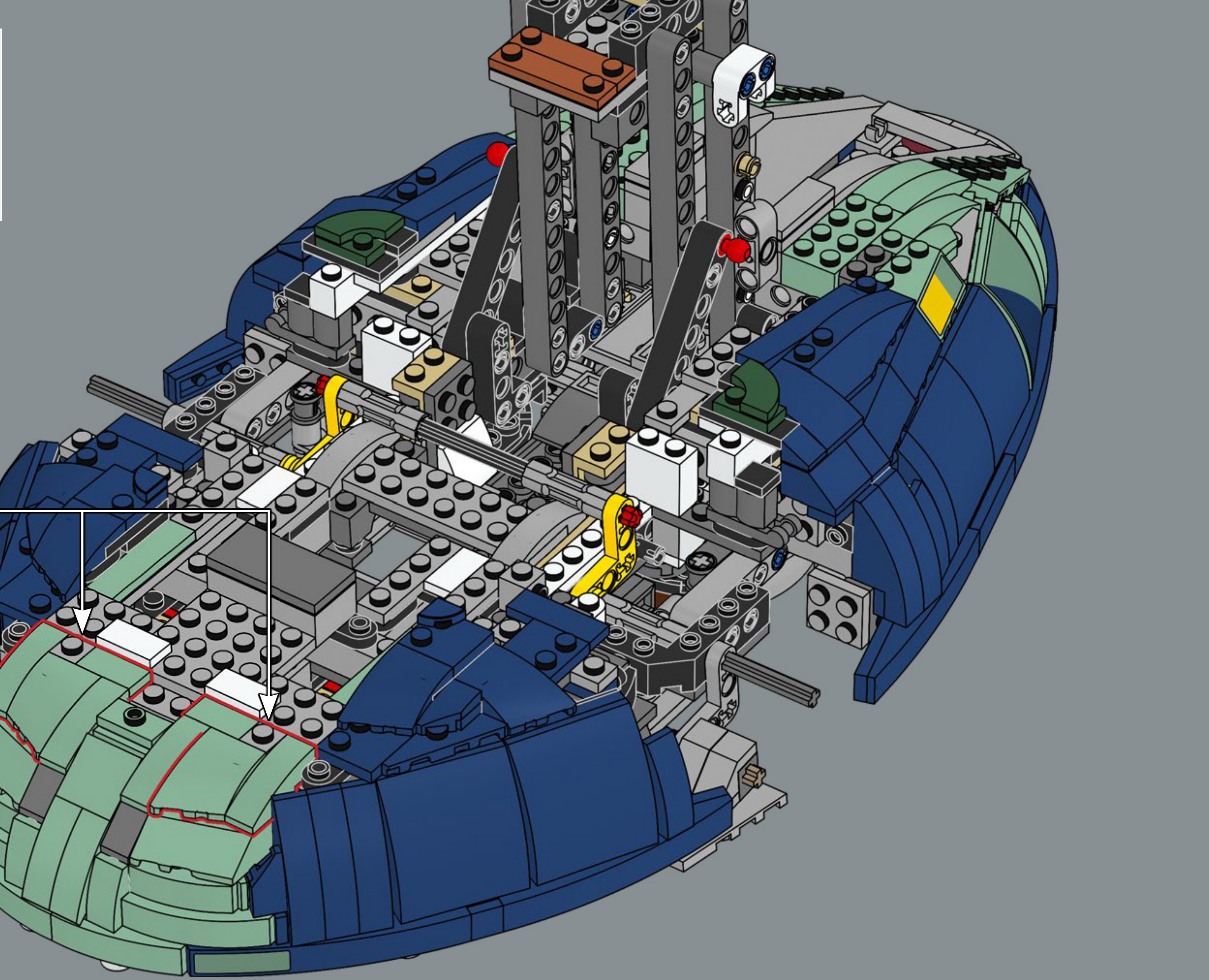

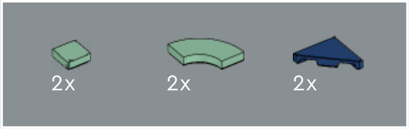

466

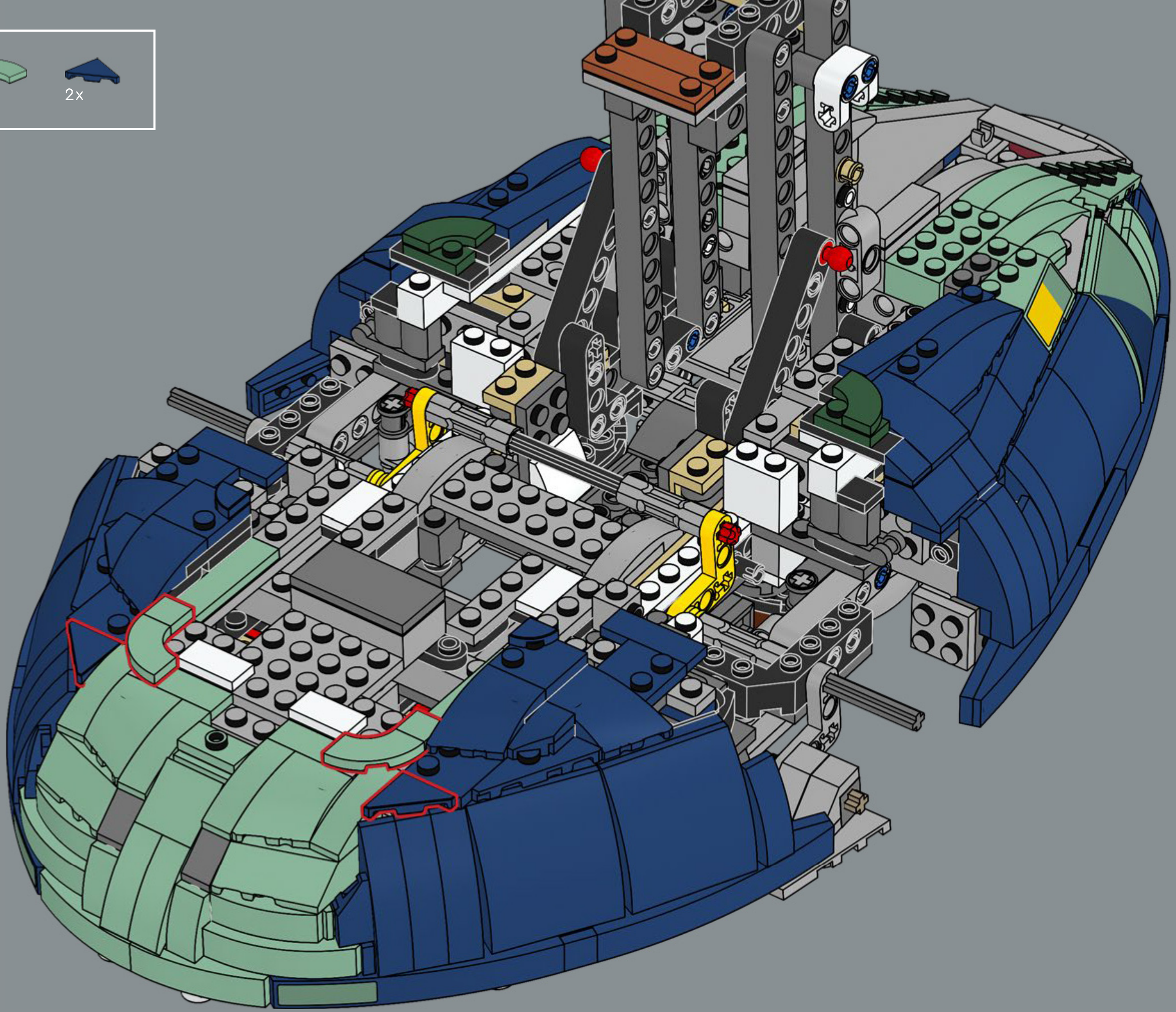

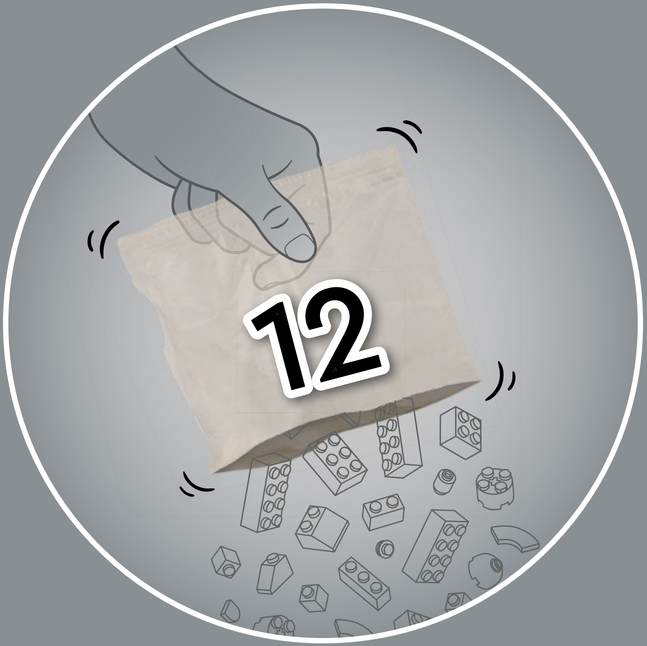

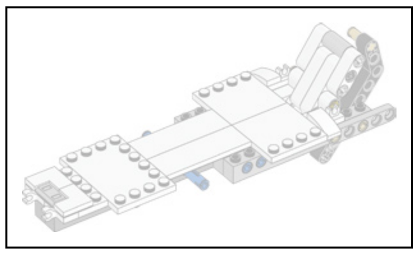

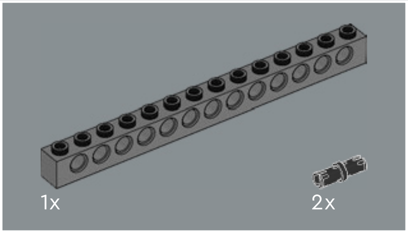

467

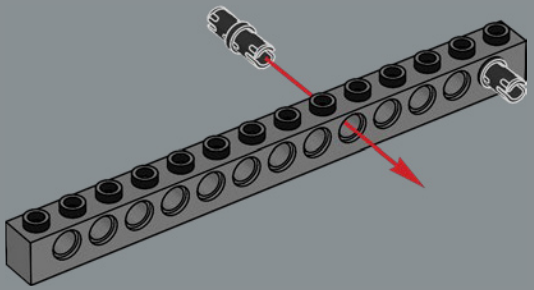

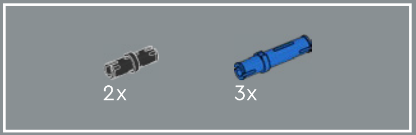

468

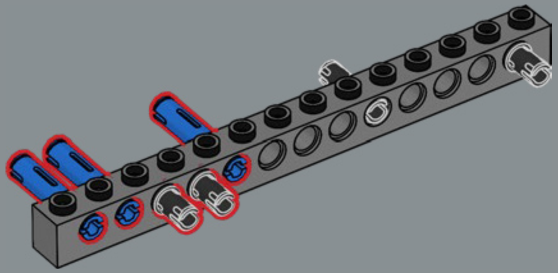

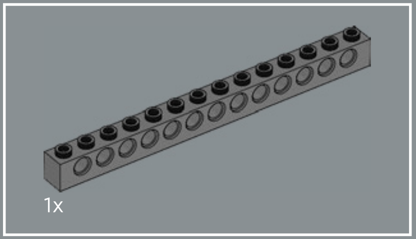

469

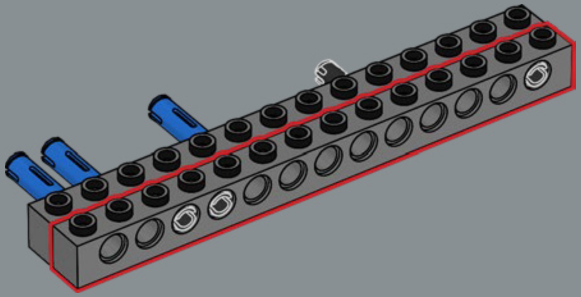

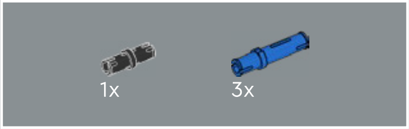

470

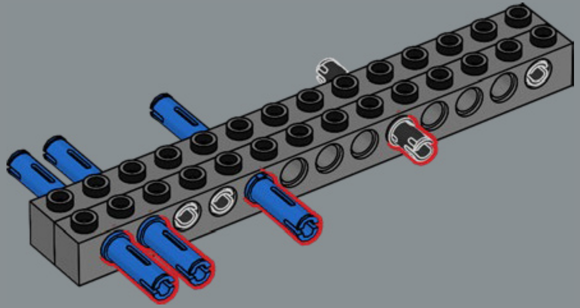

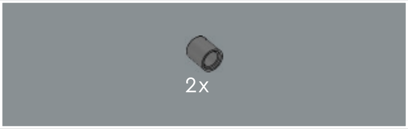

471

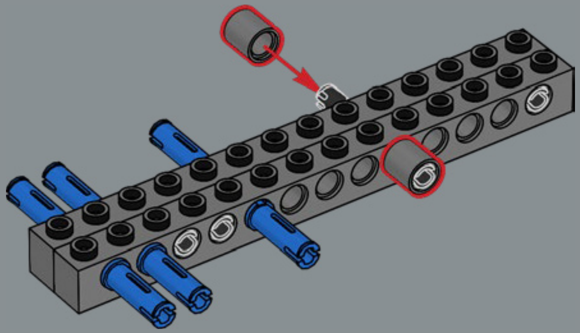

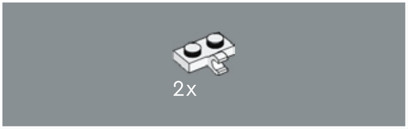

472

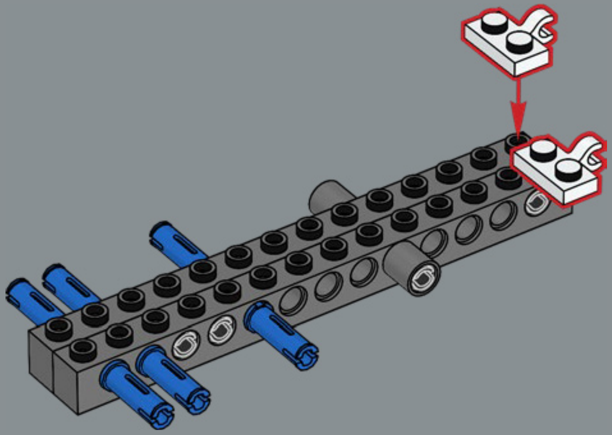

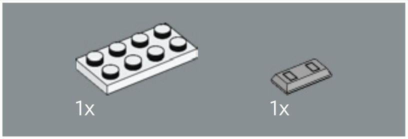

473

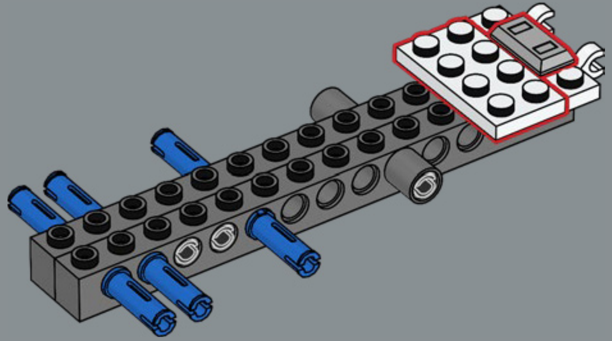

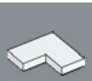

474

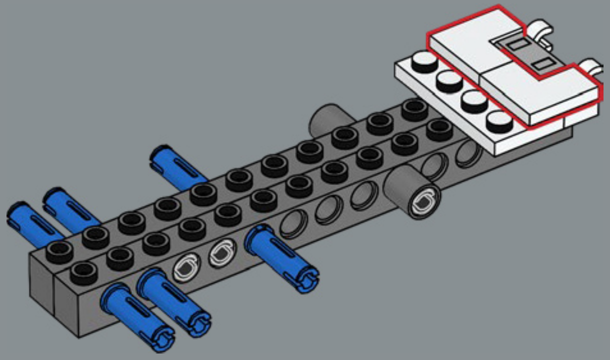

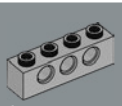

475

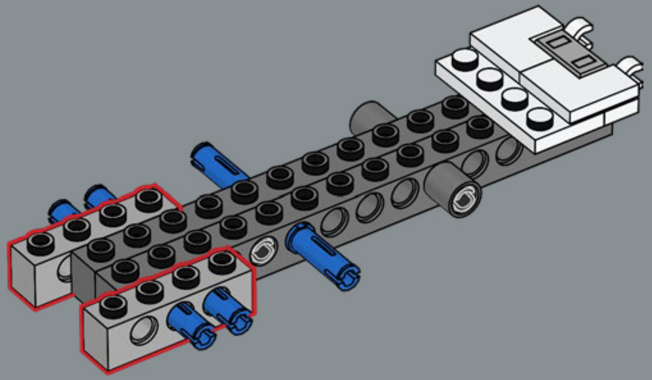

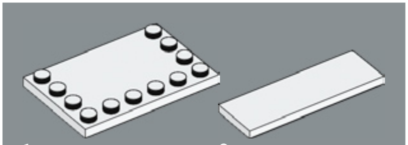

476

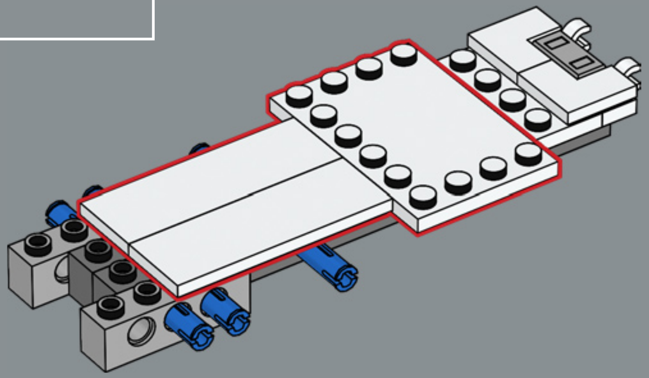

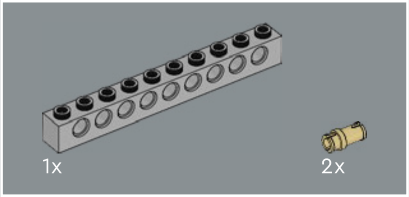

477

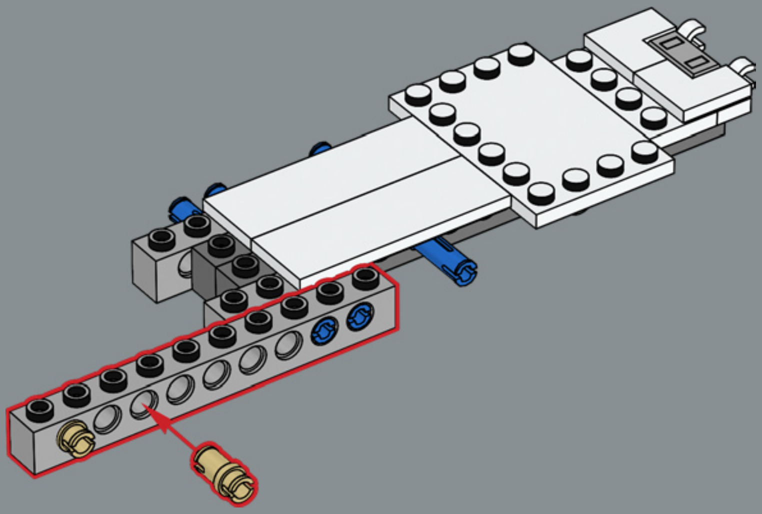

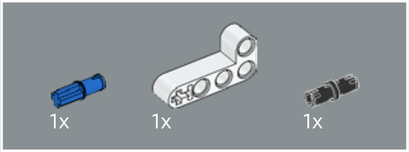

478

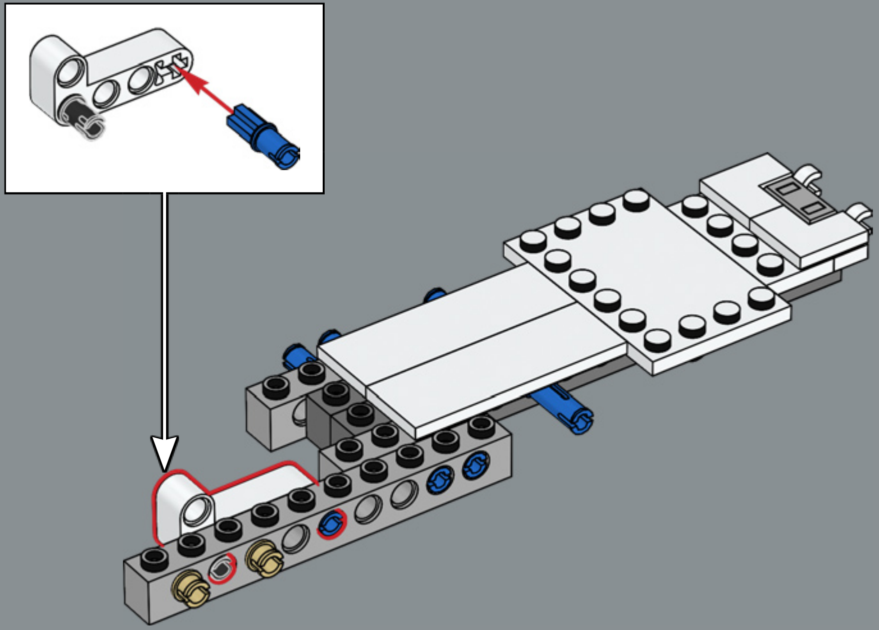

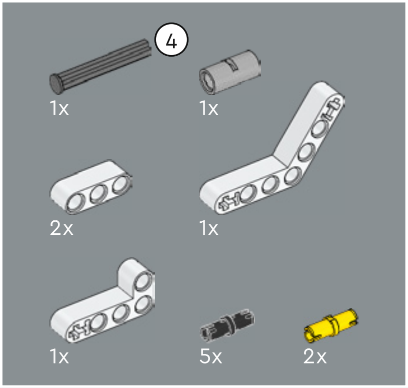
④
1x
1x
2x
1x
1x
5x
2x

479

1

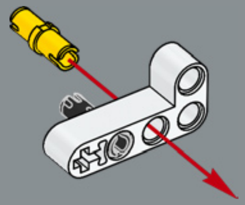

2

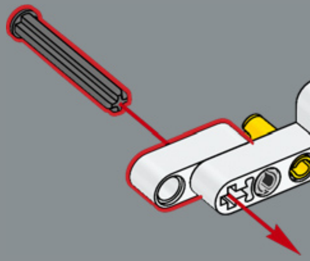

3

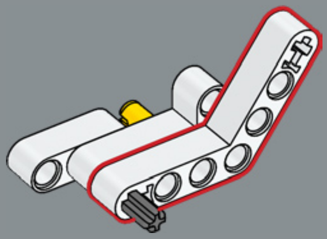

4

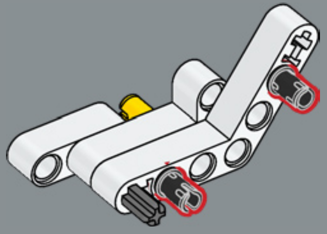

5

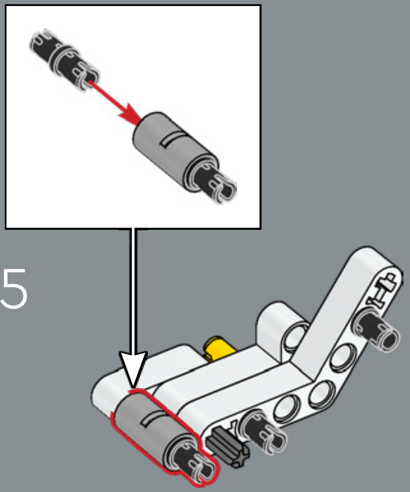

6

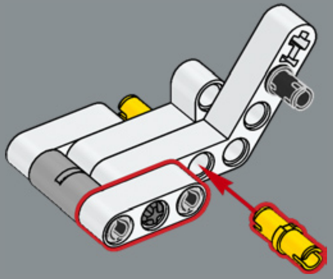

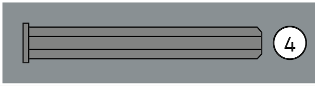

1:1

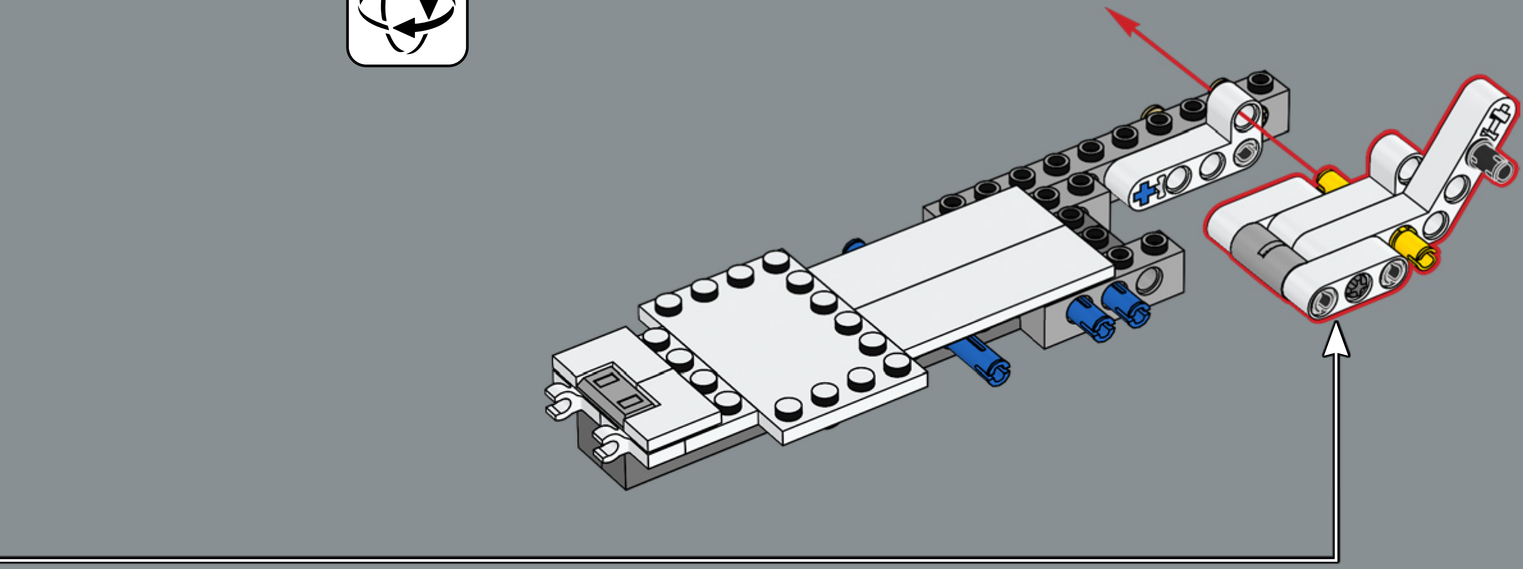

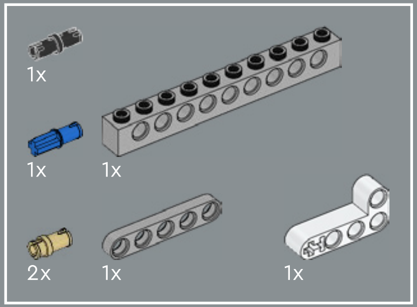
1x
1x
1x
2x
1x
1x

480

1

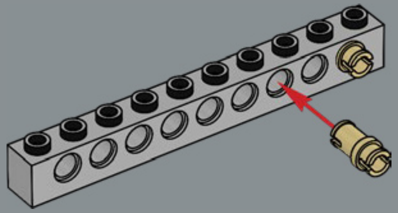

2

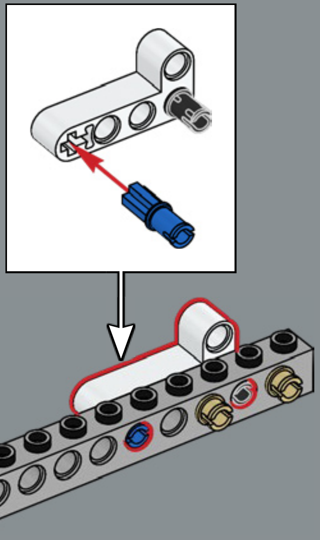

3

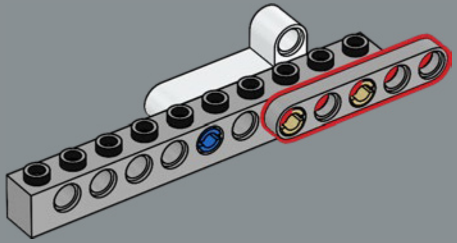

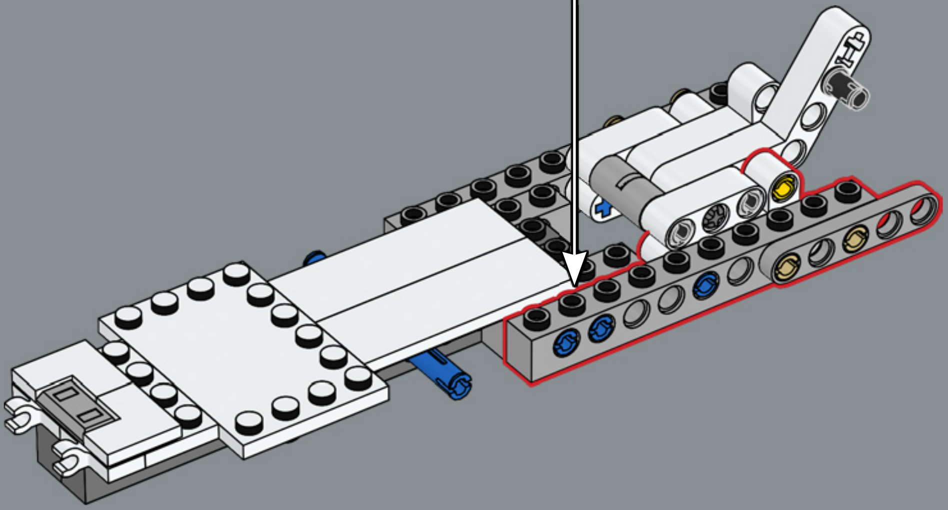

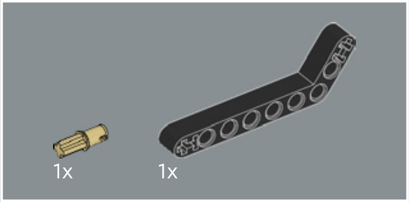

481

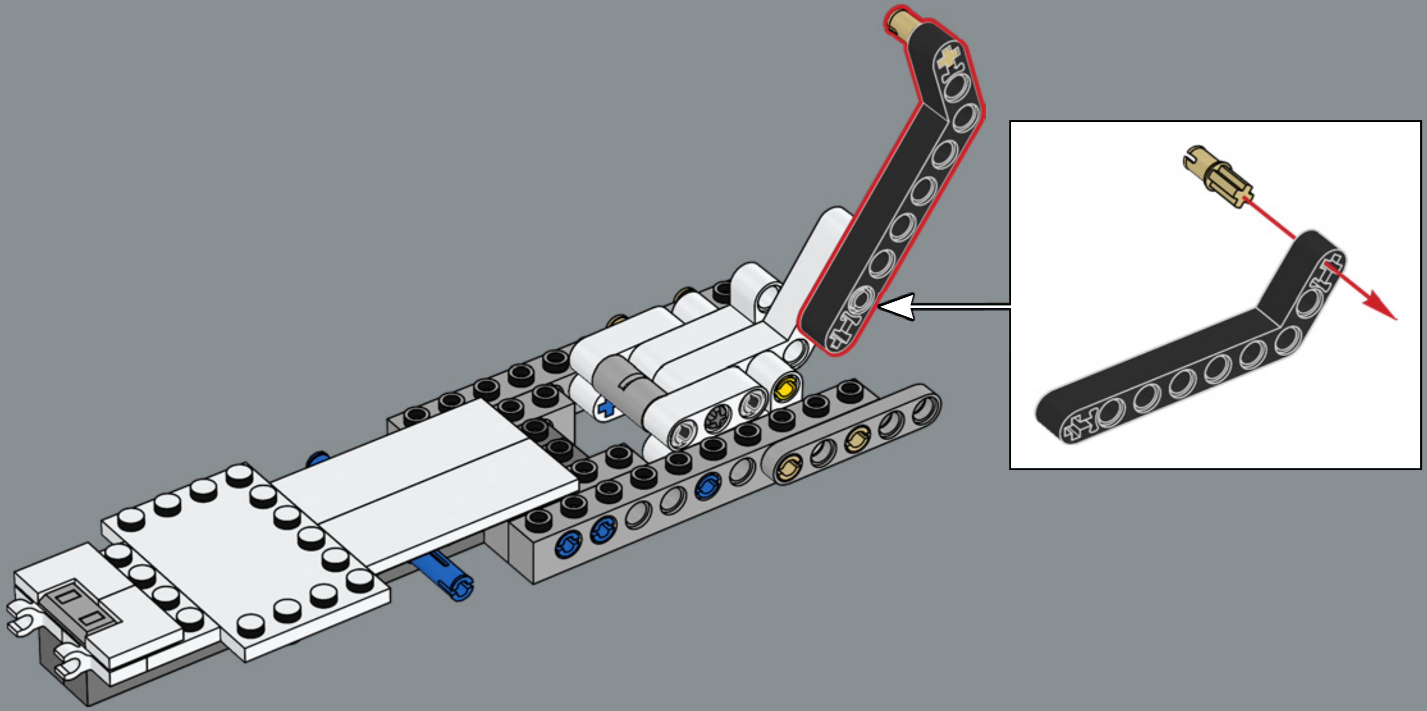

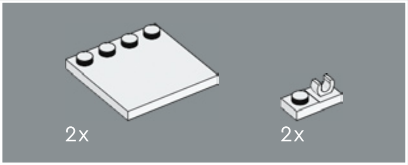

482

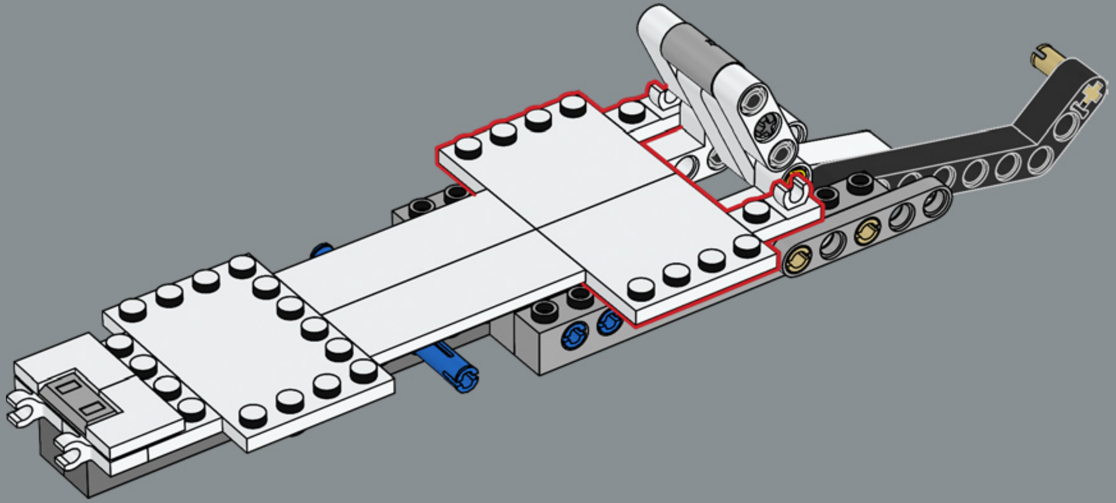

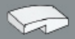
2x

483

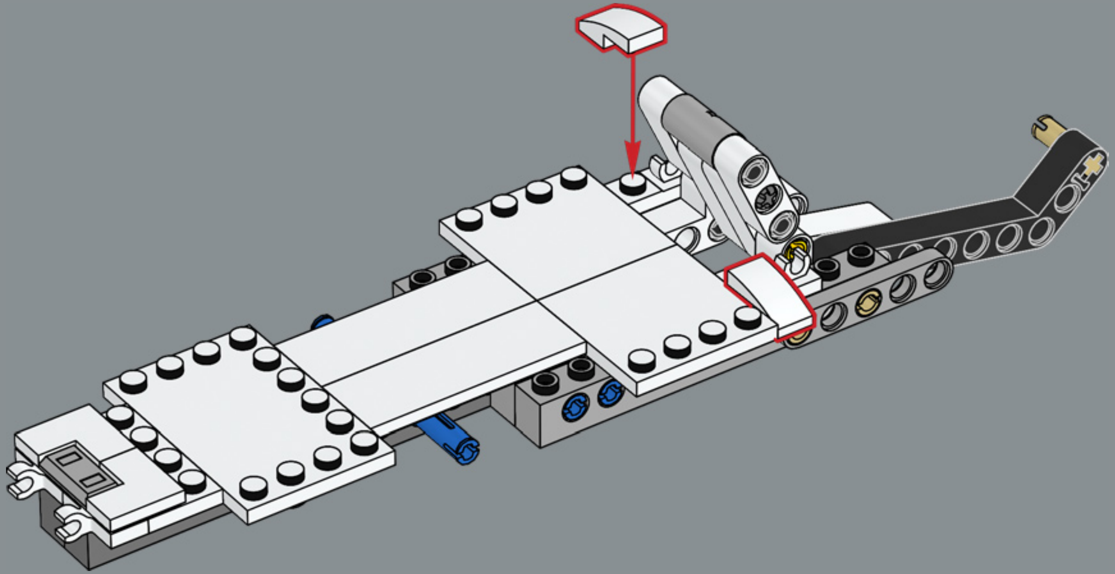

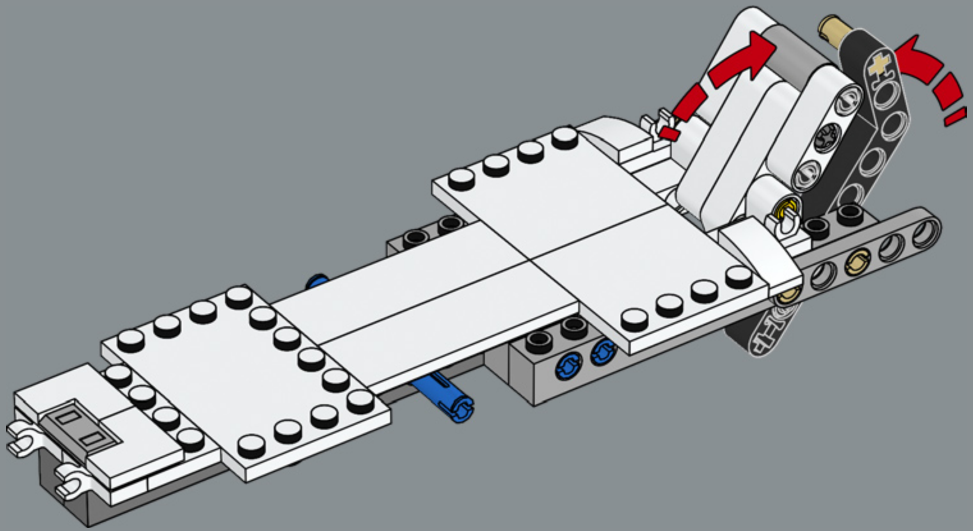

484

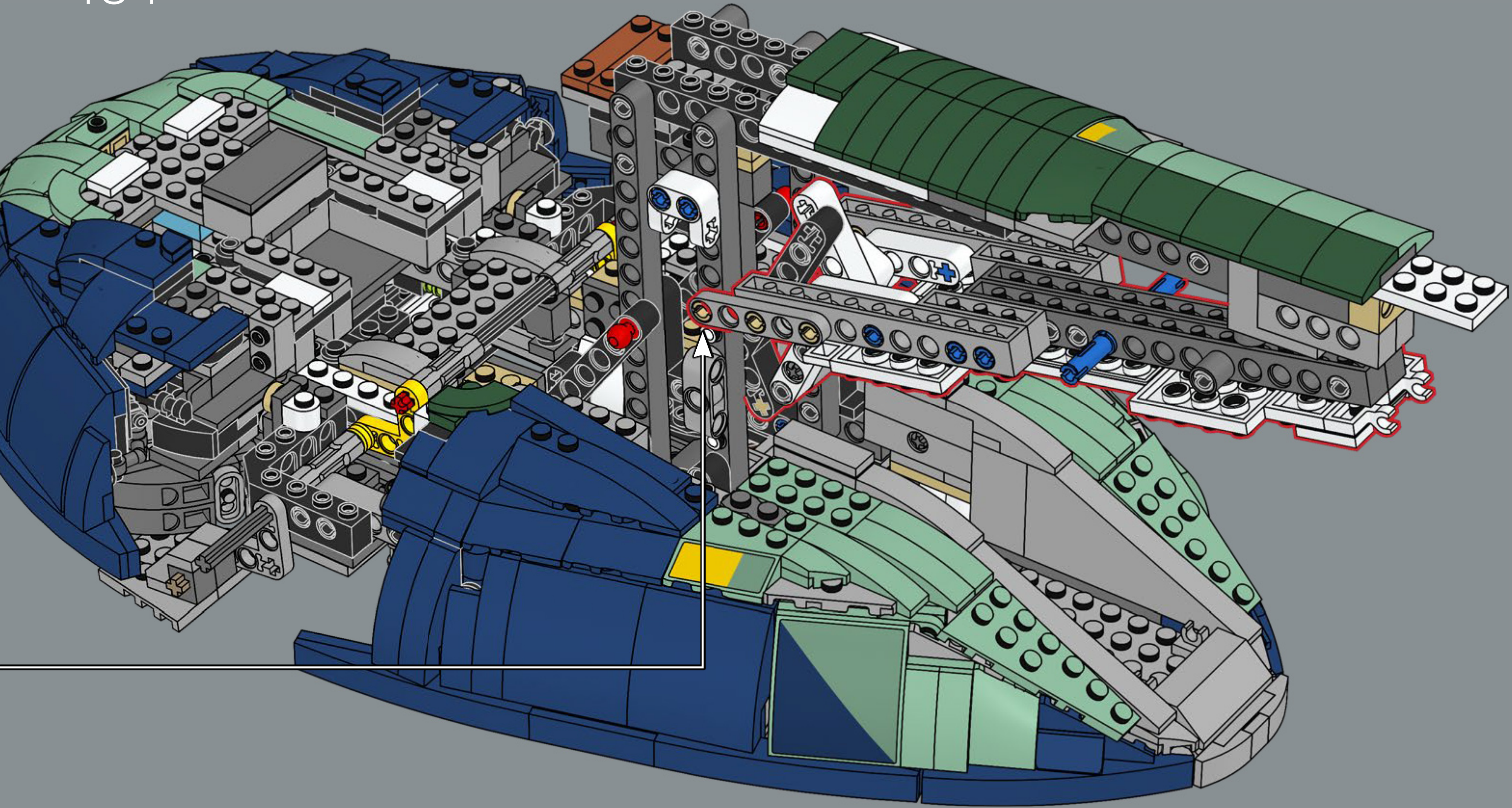

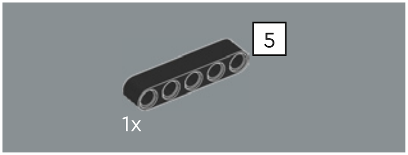

485

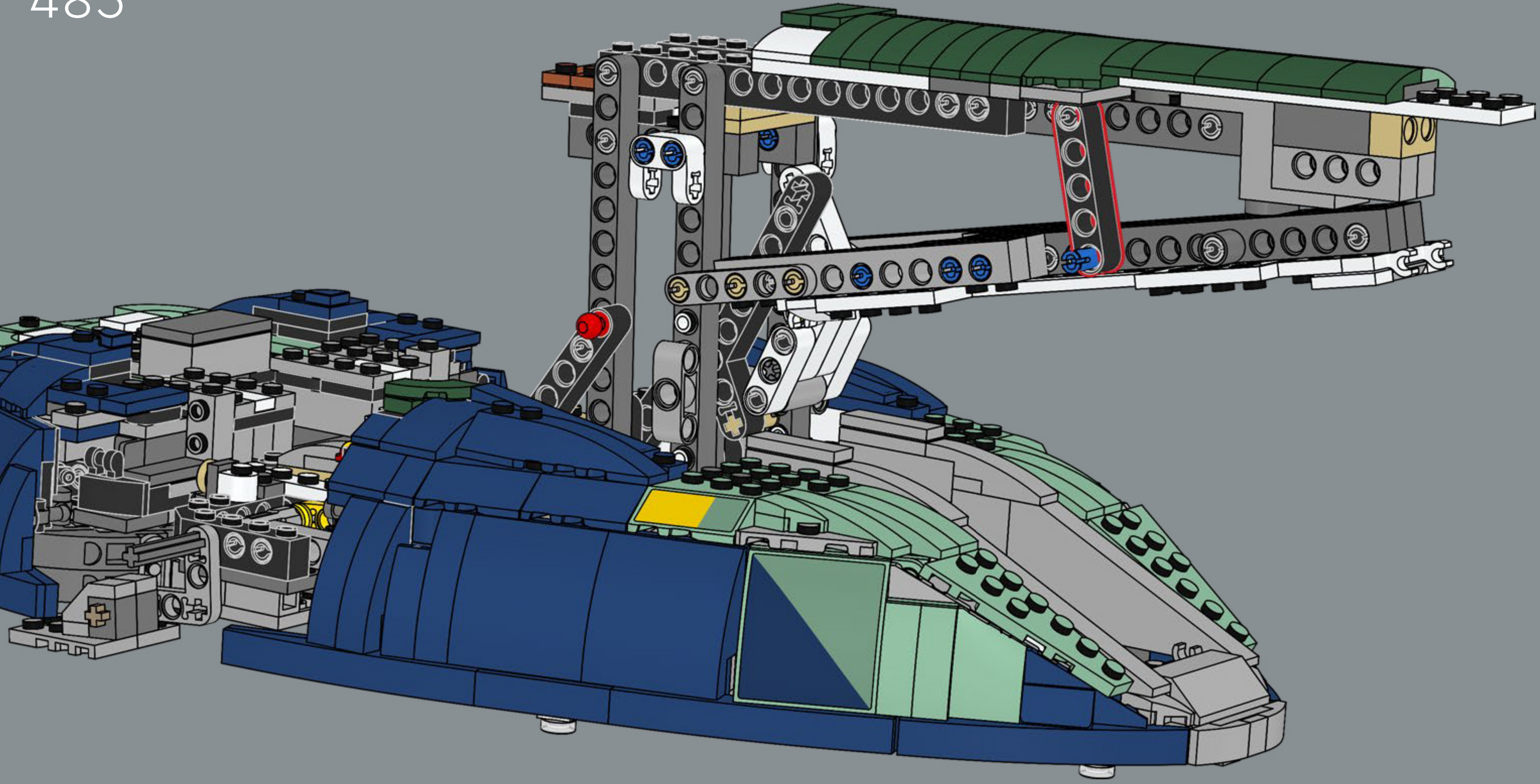

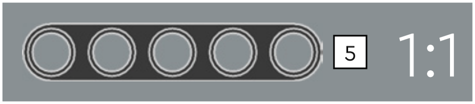

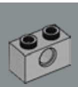

486

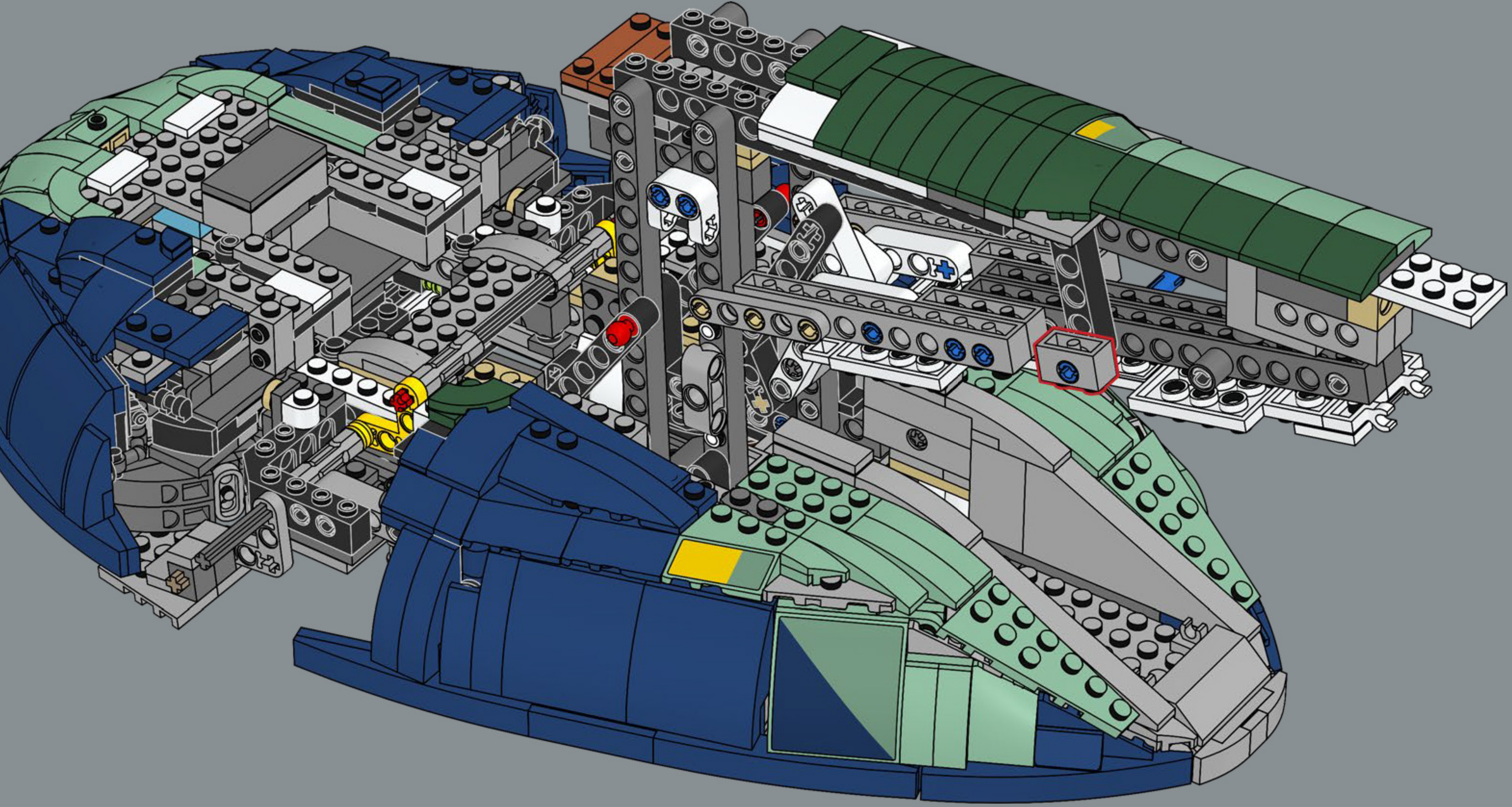

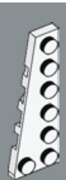
1x

487

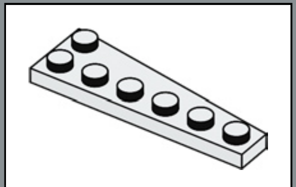

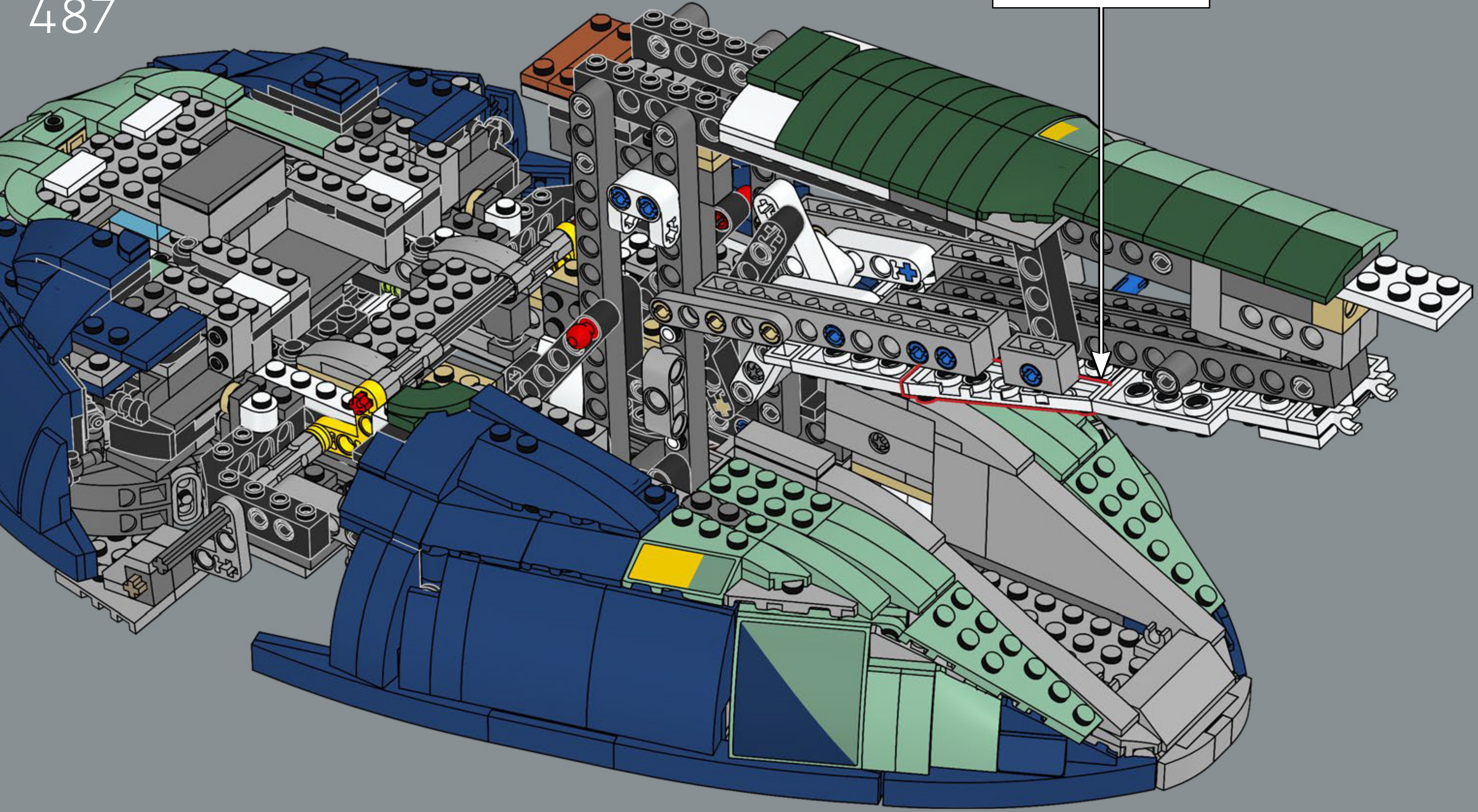

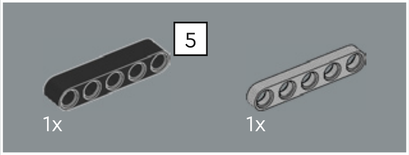

488

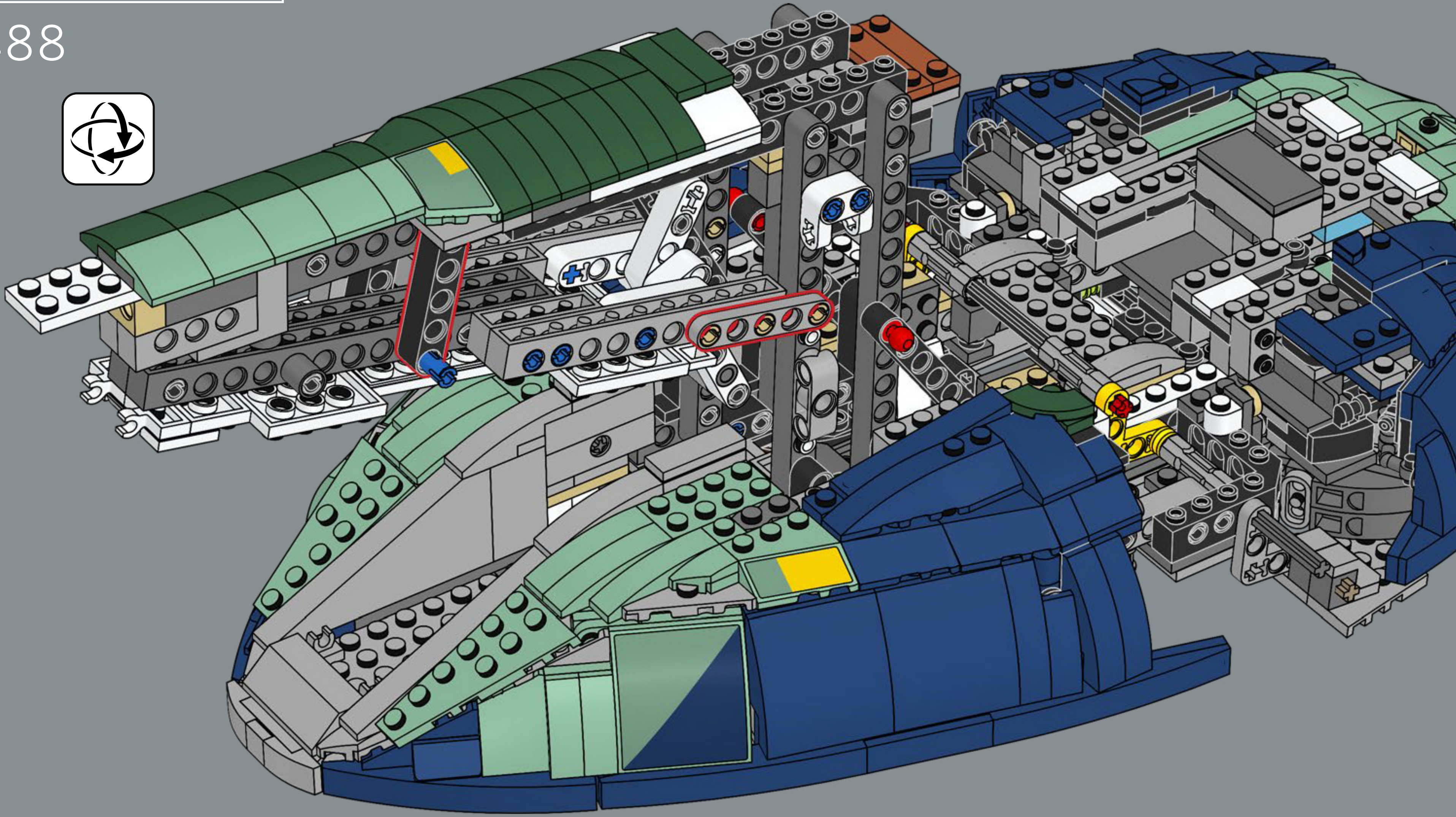

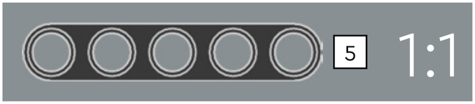

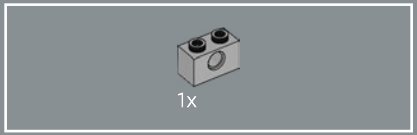

489

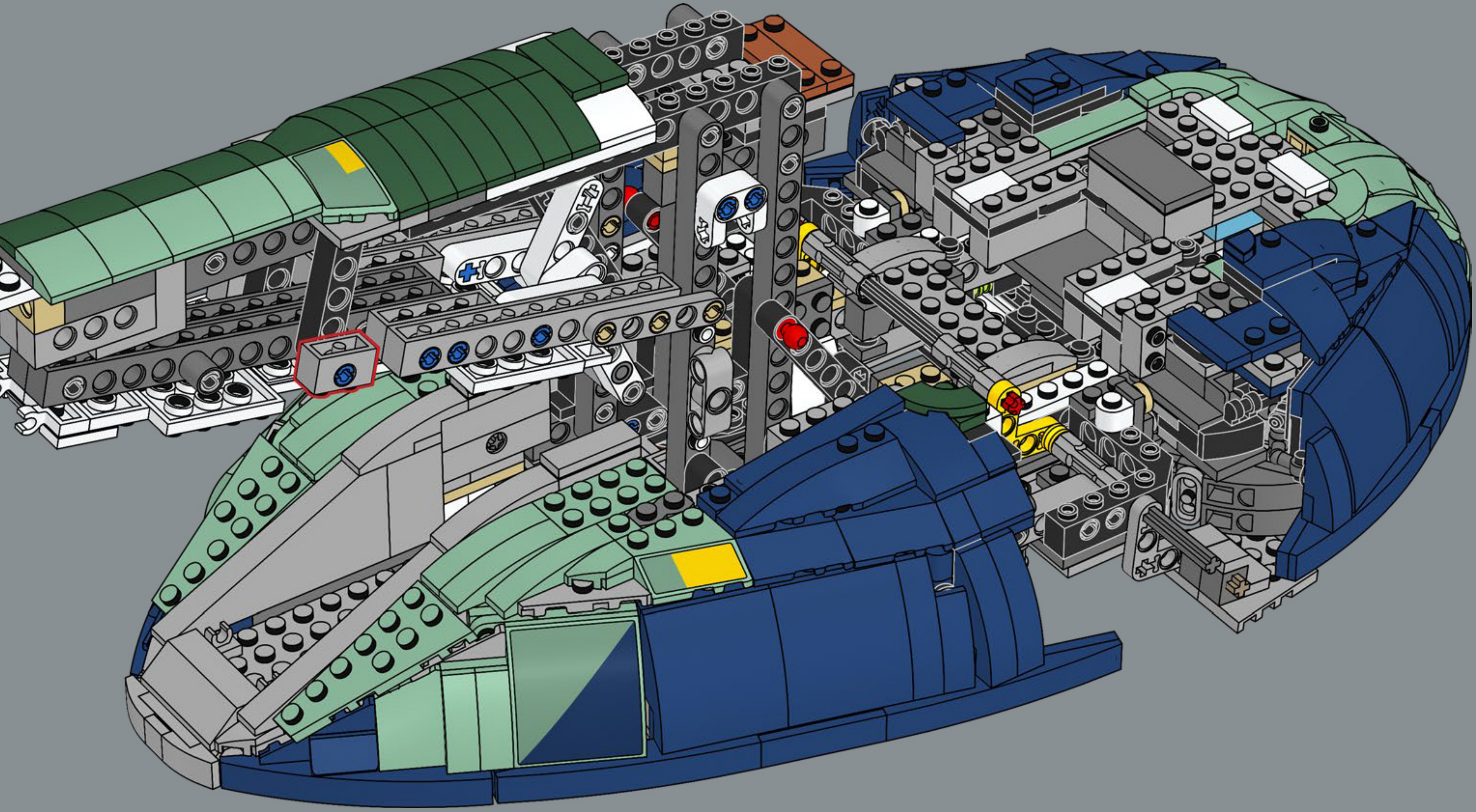

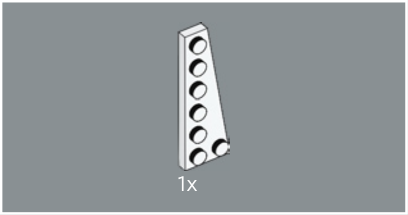

490

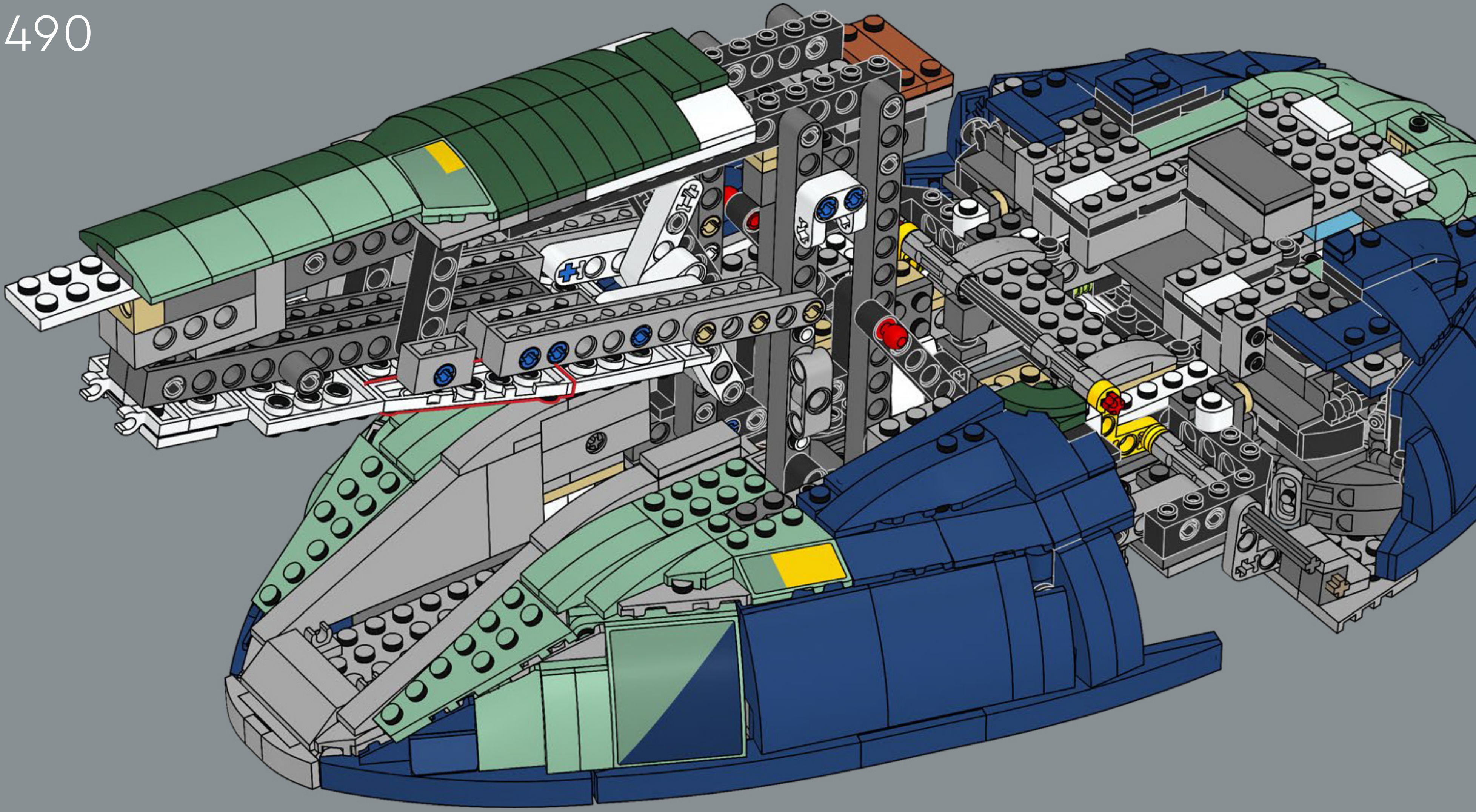

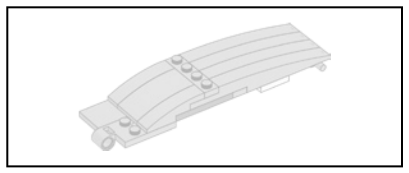

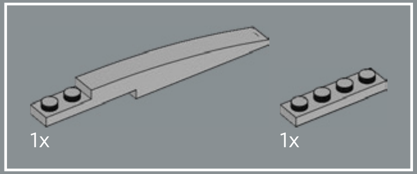

491

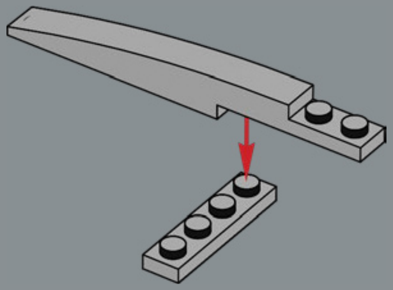

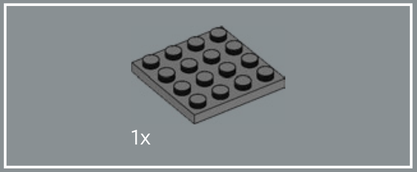

492

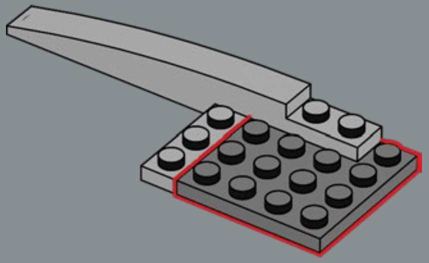

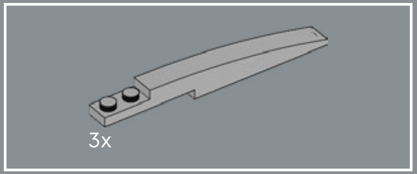

493

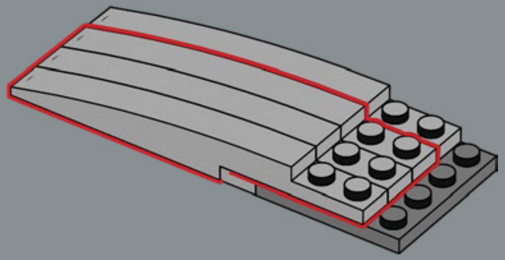

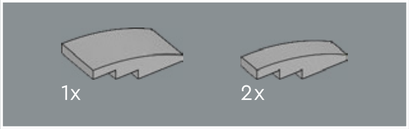

494

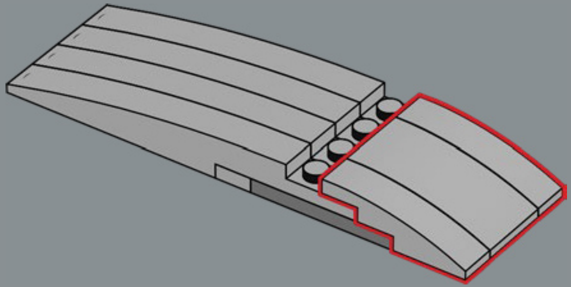

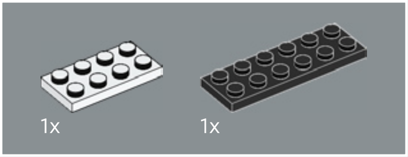

495

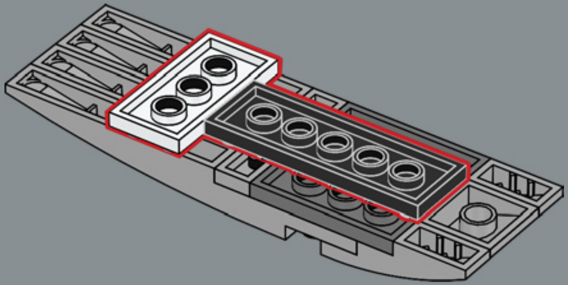

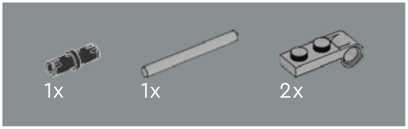

496

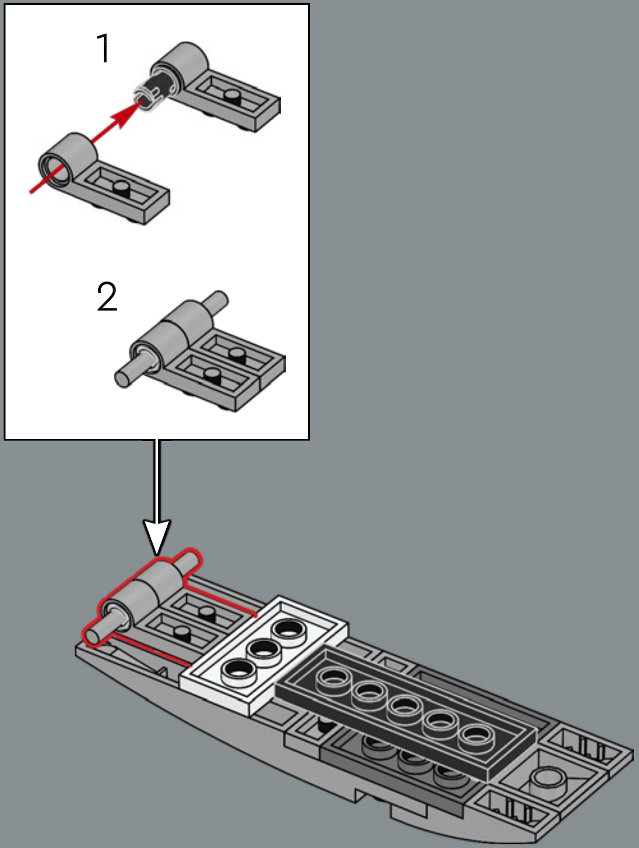

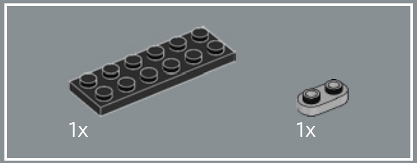

497

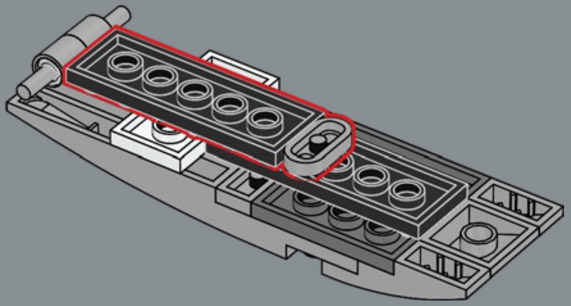

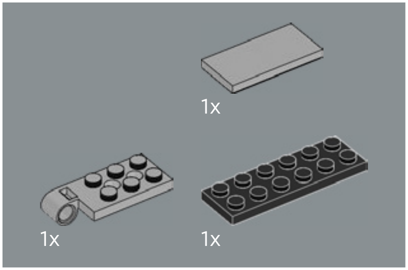

498

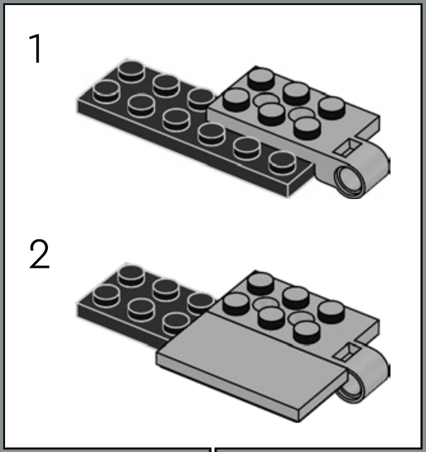

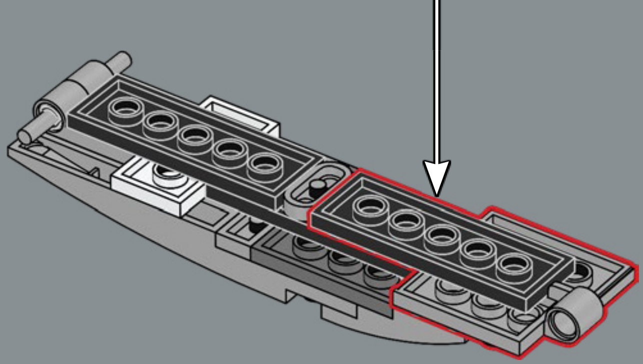

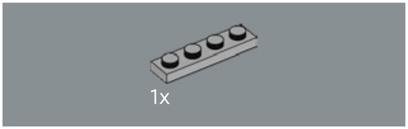

499

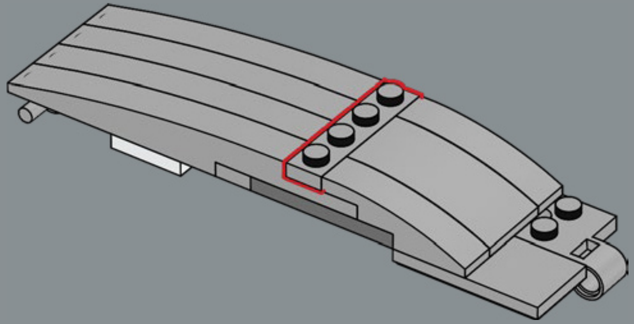

500

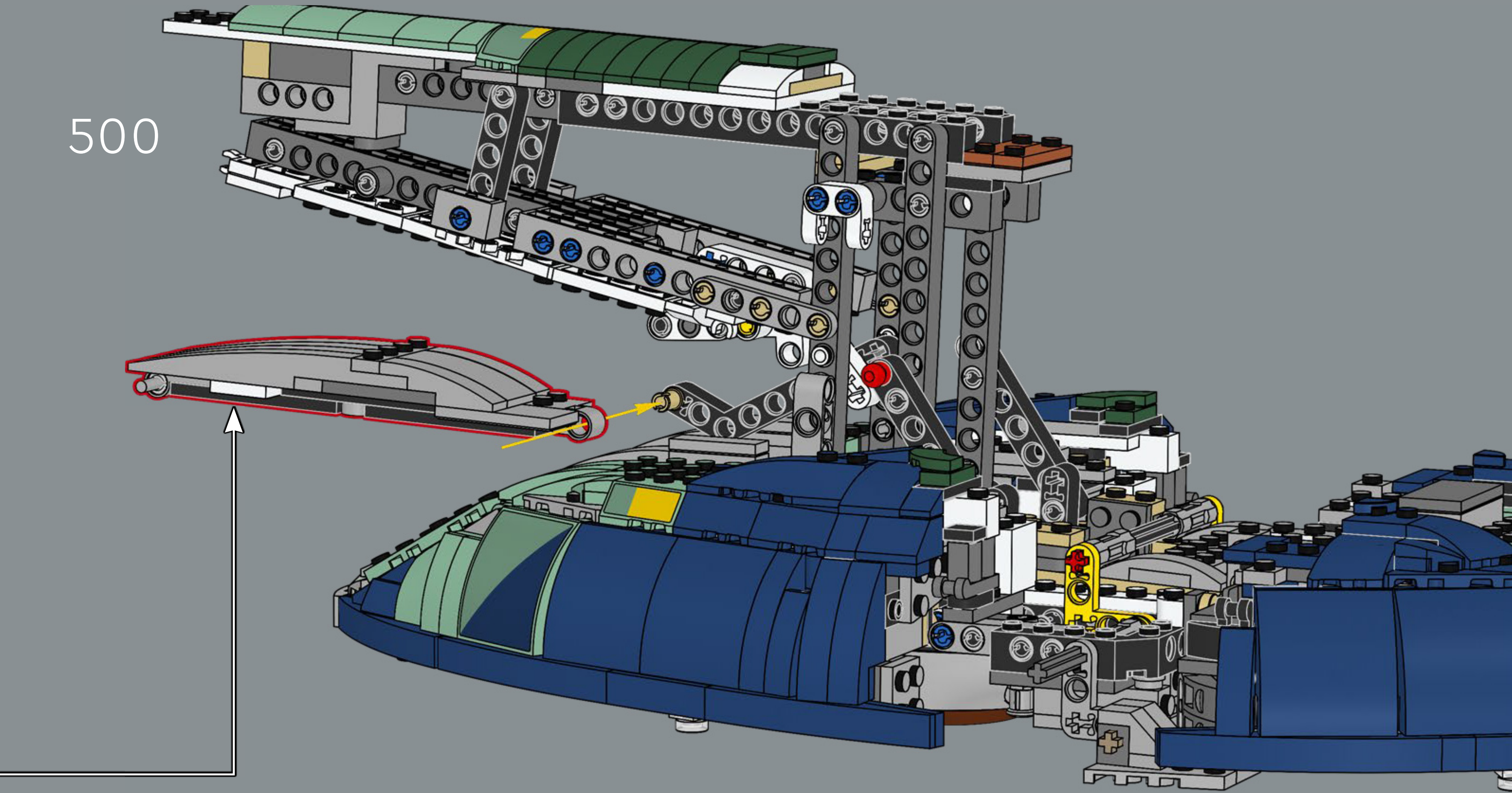

501

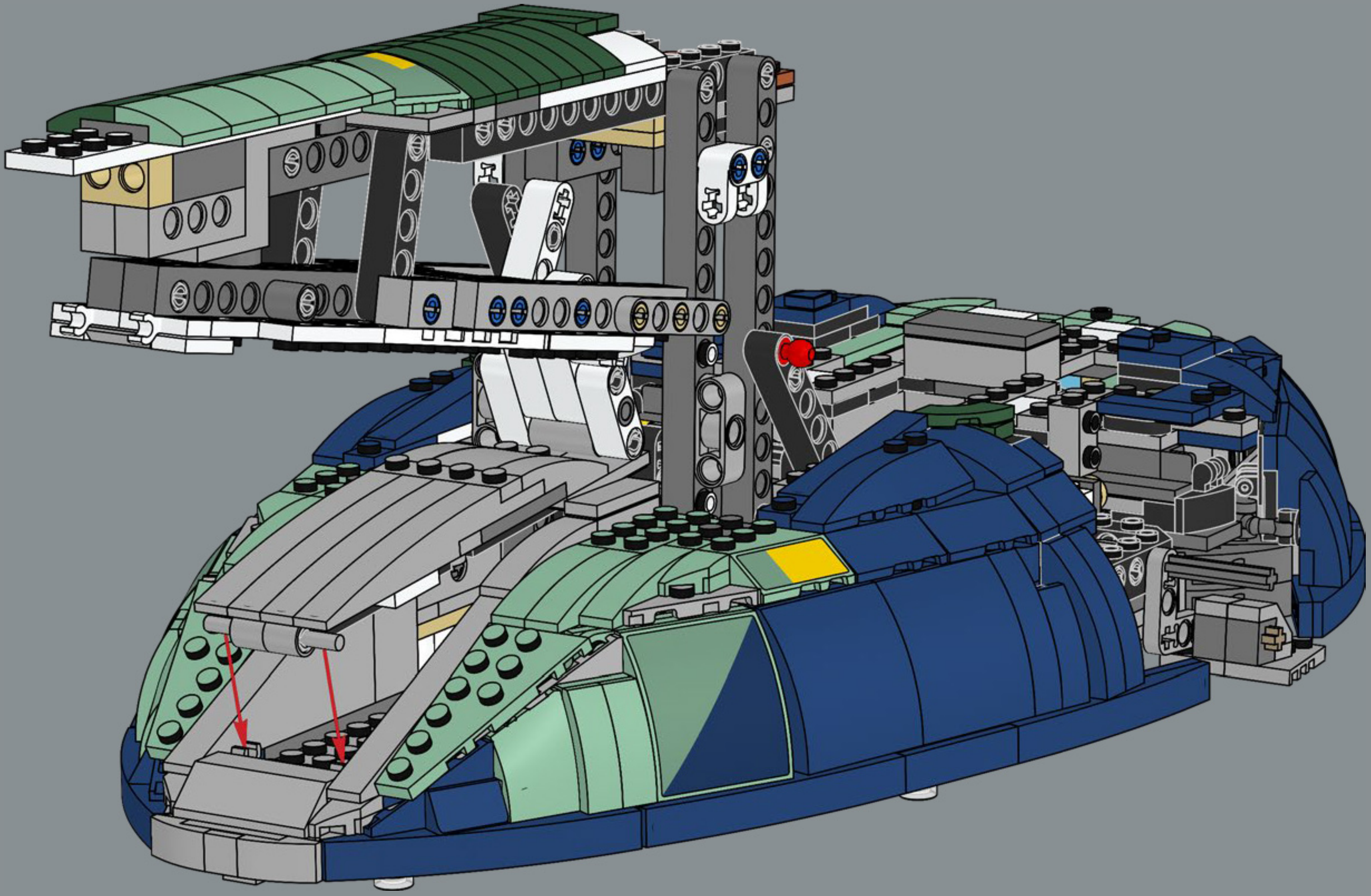

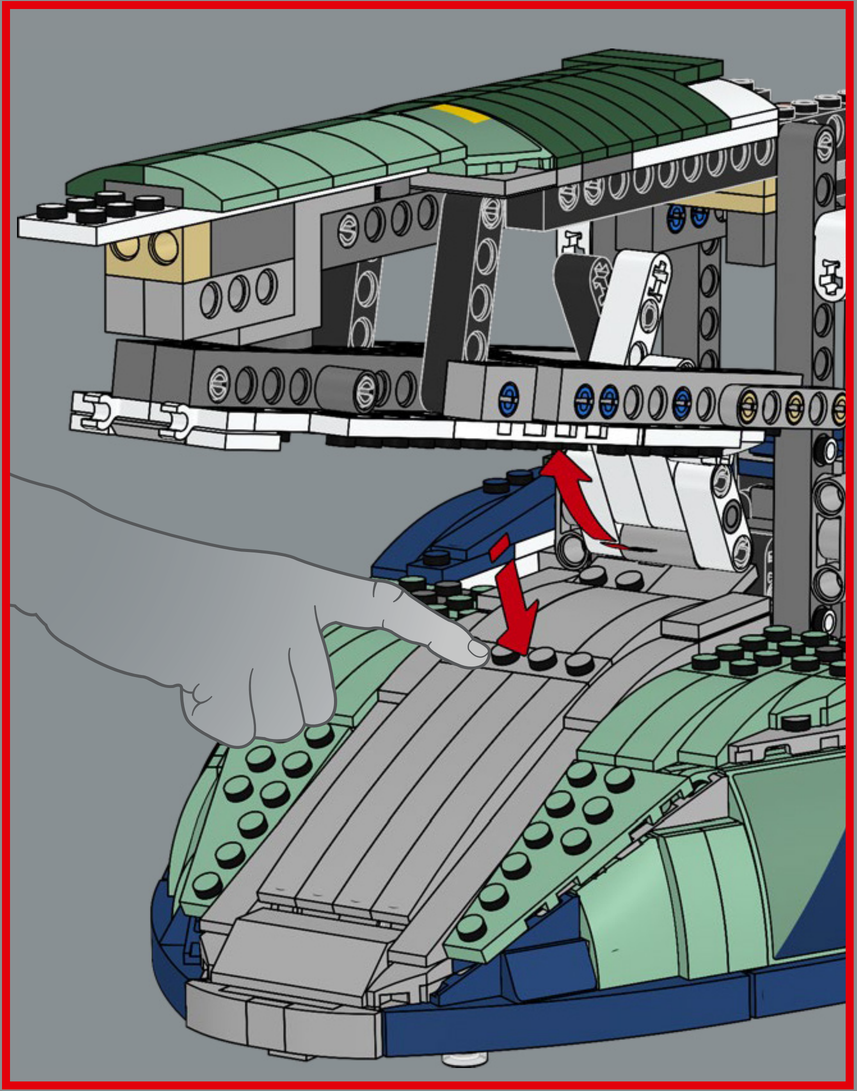

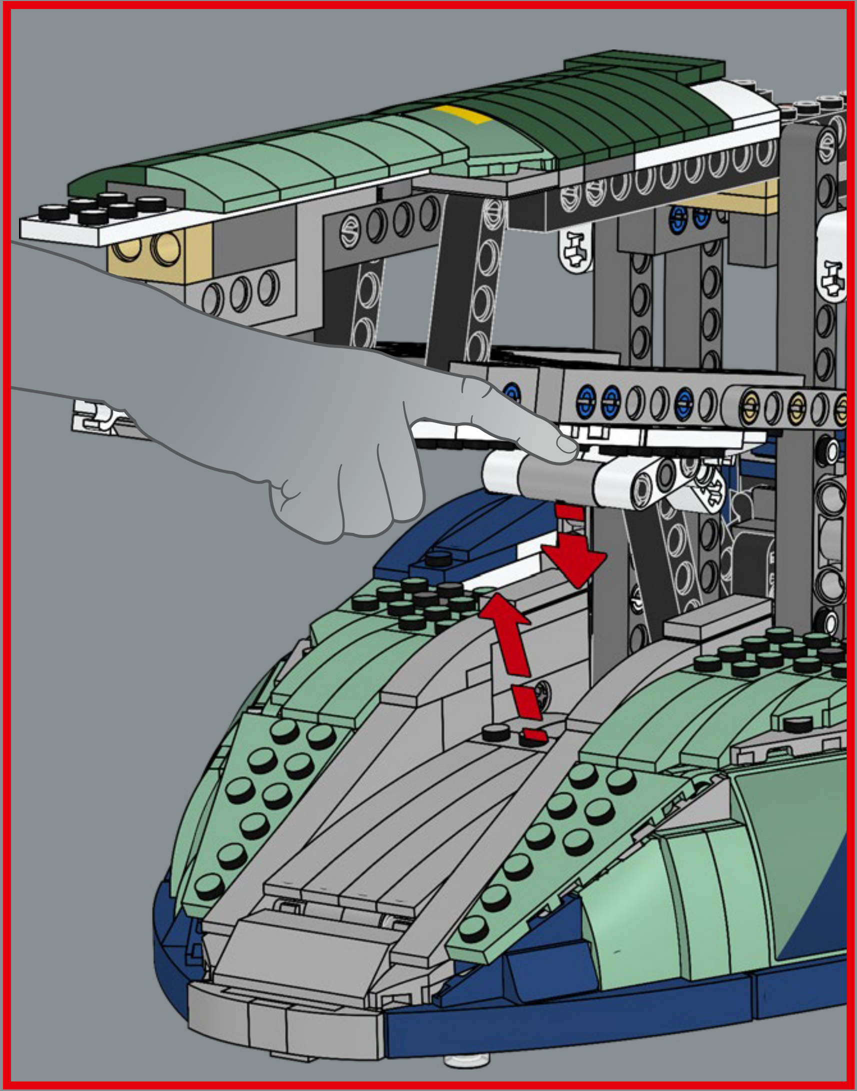

1 → 2

STAR WARS™

LEGO and the LEGO logo are trademarks of the LEGO Group.
©2025 The LEGO Group. 6580054

© & ™ Lucasfilm Ltd.