Booklet available in English on
Heft in deutscher Sprache erhältlich auf
Livret disponible en français sur
Libretto disponibile in italiano su
Folleto en español disponible en
如需中文版手册，请访问

LEGO.com/sustainable-packaging

LEGO® VIP

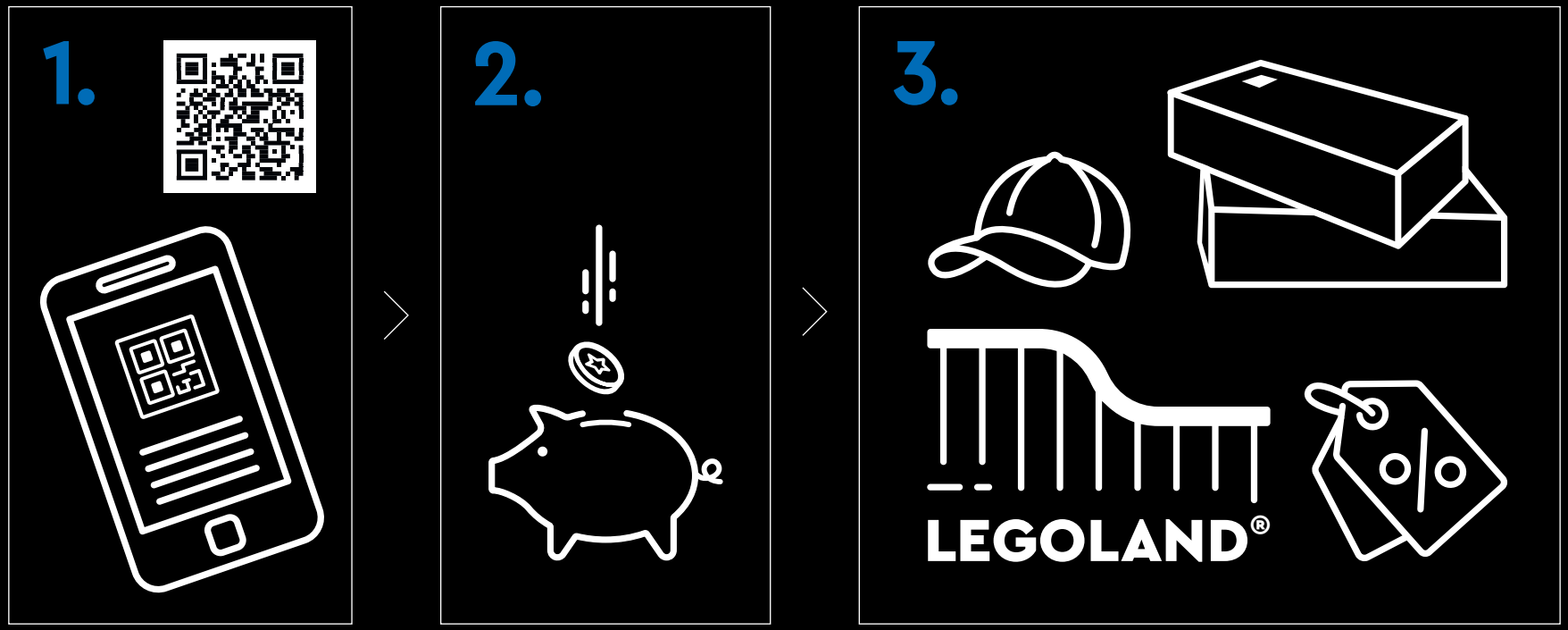

1. Sign up **2.** Earn points for purchases **3.** Redeem points for rewards, experiences, discounts & more | **1.** Melde dich an **2.** Sammle Punkte bei jedem Kauf **3.** Löse die Punkte für Belohnungen, Erlebnisse, Rabatte und Ähnliches ein | **1.** Inscrivez-vous **2.** Gagnez des points lors de vos achats **3.** Échangez vos points contre des récompenses, des expériences, des remises et bien plus encore | **1.** Iscriviti **2.** Guadagna punti con i tuoi acquisti **3.** Riscatta punti per premi, esperienze, sconti e altro ancora | **1.** Regístrate **2.** Gana puntos por tus compras **3.** Canjea puntos por recompensas, experiencias, descuentos y mucho más | **1.** Registe-se **2.** Ganhe pontos em compras **3.** Troque os pontos para prémios, experiências, descontos e muito mais | **1.** 注册 **2.** 购物赚积分 **3.** 用积分兑换奖励、体验、折扣等 | **1.** Zarejestruj się **2.** Zdobywaj punkty za zakupy **3.** Wymieniaj punkty na rabaty, przygody i inne nagrody | **1.** Zaregistrujte se **2.** Sbírejte body za nákupy **3.** Vyměňujte body za odměny, zážitky, slevy a spoustu dalšího | **1.** Zaregistrujte sa **2.** Získavajte body za nákupy **3.** Uplatnite si body a získajte odmeny, rôzne zážitky, zľavy a ešte viac | **1.** Regisztrálj **2.** Szerezz pontokat minden vásárlással **3.** Váltsd be pontjaidat jutalmakra, élményekre, kedvezményekre és egyebekre | **1.** Înscrie-te **2.** Câştigă puncte pentru achiziții **3.** Valorifică puncte pentru recompense, experiențe, reduceri și multe altele | **1.** Регистрирайте се **2.** Получавайте точки за покупки **3.** Използвайте точките за награди, услуги, отстъпки и т.н. | **1.** Reģistrējies **2.** Pelni punktus par pirkumiem **3.** Izmanto punktus, lai saņemtu balvas, izklaides iespējas, atlaides un daudz ko citu | **1.** Registreeru **2.** Teeni ostude eest punkte **3.** Lunasta punktide eest preemiad, elamused, allahindlused ja muu | **1.** Užsiregistruokite **2.** Pelnykite taškų už pirkinius **3.** Panaudokite taškus atlygiui, funkcijoms, nuolaidoms ir ne tik

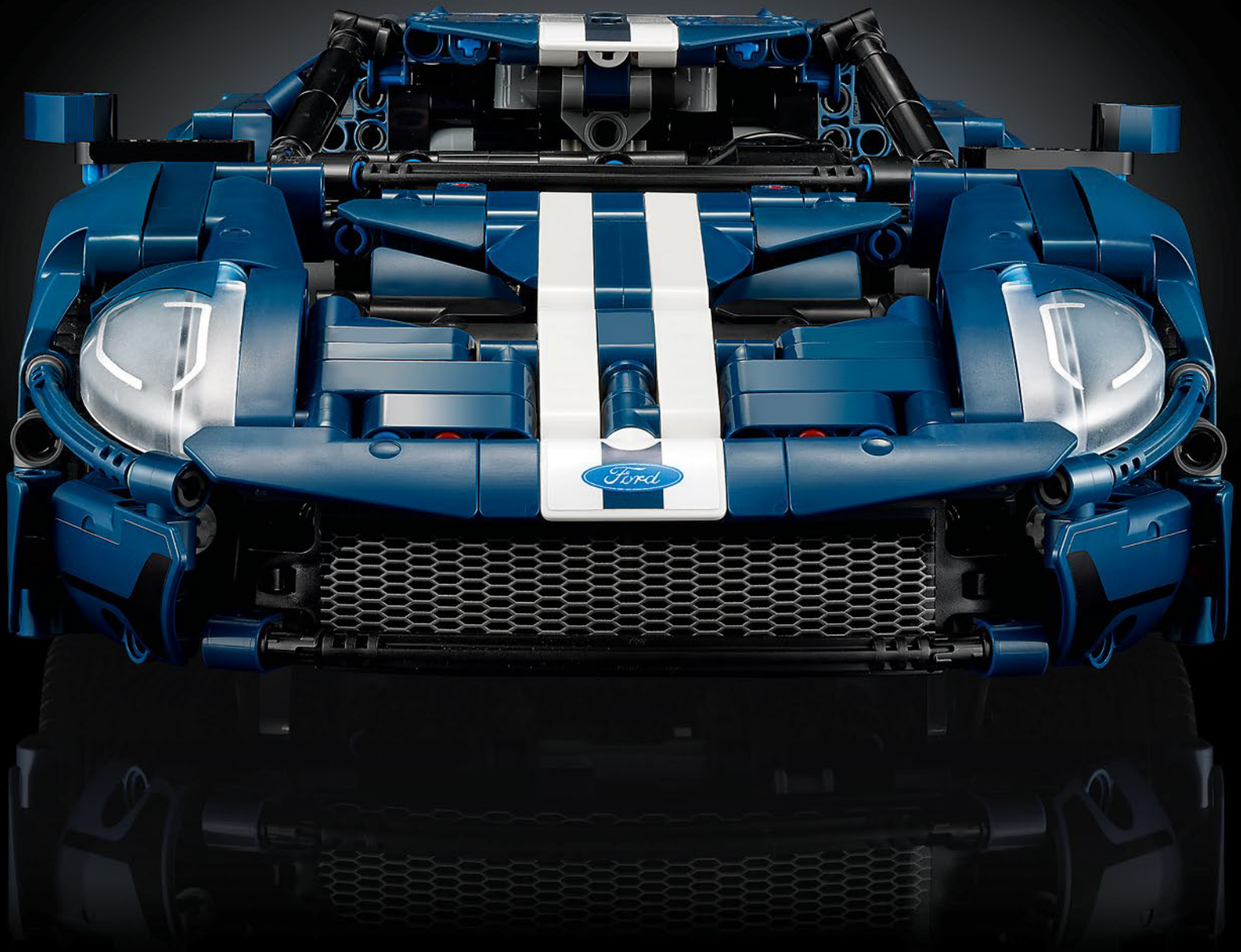
Ford

GT

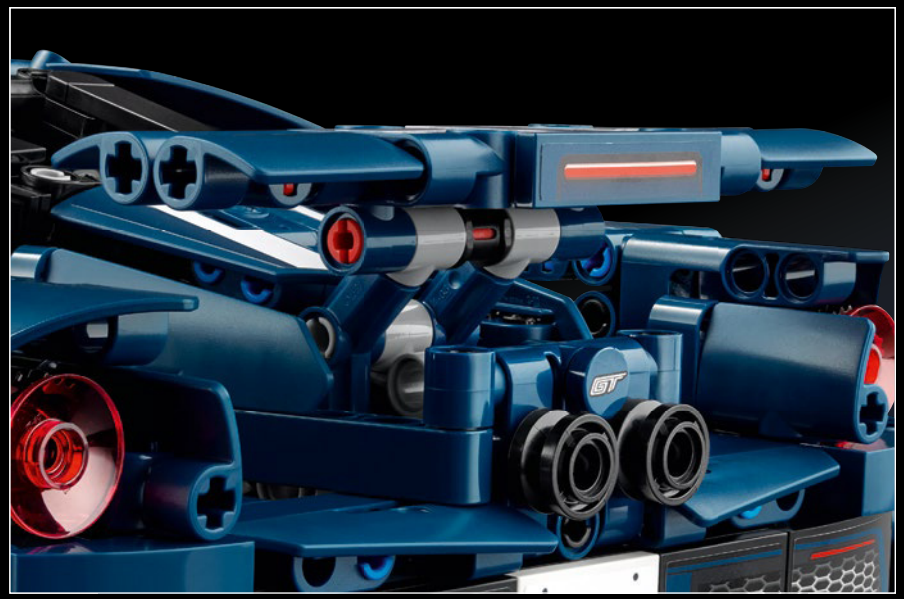

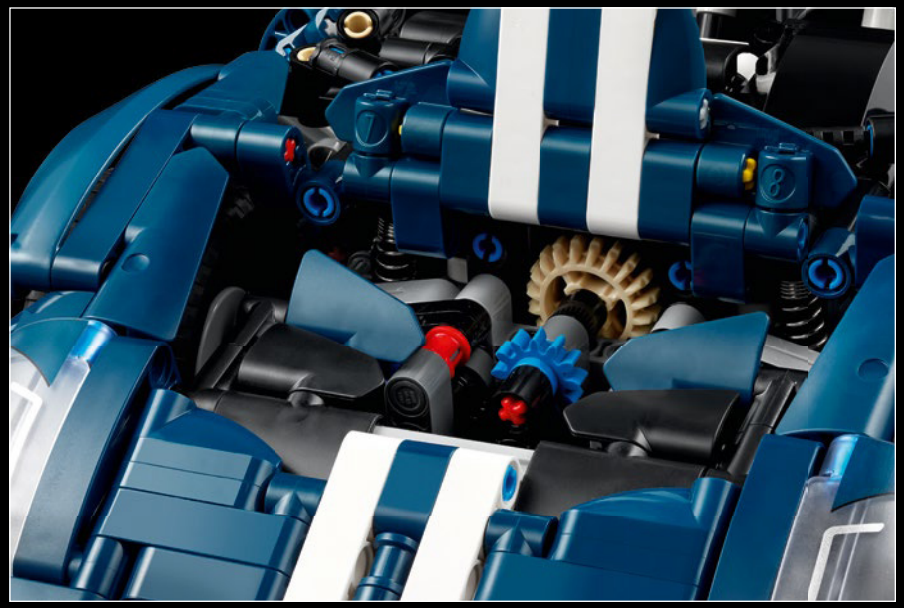

THE PINNACLE OF FORD PERFORMANCE

The teardrop-shaped cockpit, intersecting surfaces, flying buttresses, pop-up spoiler wing. The 2022 Ford GT is a design and performance marvel. In close collaboration with the Ford Motor Company, LEGO® Technic designers created an authentic 1:12 scale version.

FORD GT40 MK I

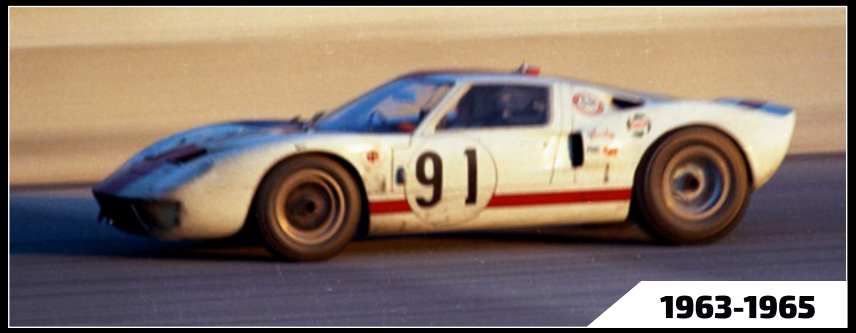

1963-1965

Ford establishes a team of expert racing-car drivers, engineers and Ford officials to create a world-class racing car. The first Ford GT40 MK I competes in the 1964 24 Hours of Le Mans.

FORD GT40 MK IV

1967

With a much lighter chassis and body, and a narrower cockpit, the Ford GT MK IV construction is inspired by aircraft designs to reduce drag and improve aerodynamics.

1963 **1966** **1967** **2005**

FORD GT40 MK II

1966

Three Ford GT40 MK IIs win first, second and third places at the 1966 24 Hours of Le Mans, making the Ford Motor Company the first American manufacturer to win the race.

FORD GT

2005-2006

The supercar brings the popular 1966-1969 Ford GT design into the new millennium, combining classic and striking contemporary design solutions with the latest technology.

The latest stunning technological evolution of the Ford GT includes a 3.5-litre EcoBoost® twin-turbo V6 engine in an ultralight carbon fibre body with signature buttress air ducts.

FROM THE DESIGN TEAM

'Ford GT40 racing cars are truly iconic in design as well as performance. A LEGO® Technic version of the latest Ford GT has been on our wish list for a few years, and the 1967 Ford GT40 Mk IV is my favourite car of all time. It took experimentation, new offset building techniques and new wheel arch panels to nail the car's proportions. Thanks to a great collaboration with Ford, we're so excited to present this model finally.'
– Milan Reindl, LEGO® Technic designer

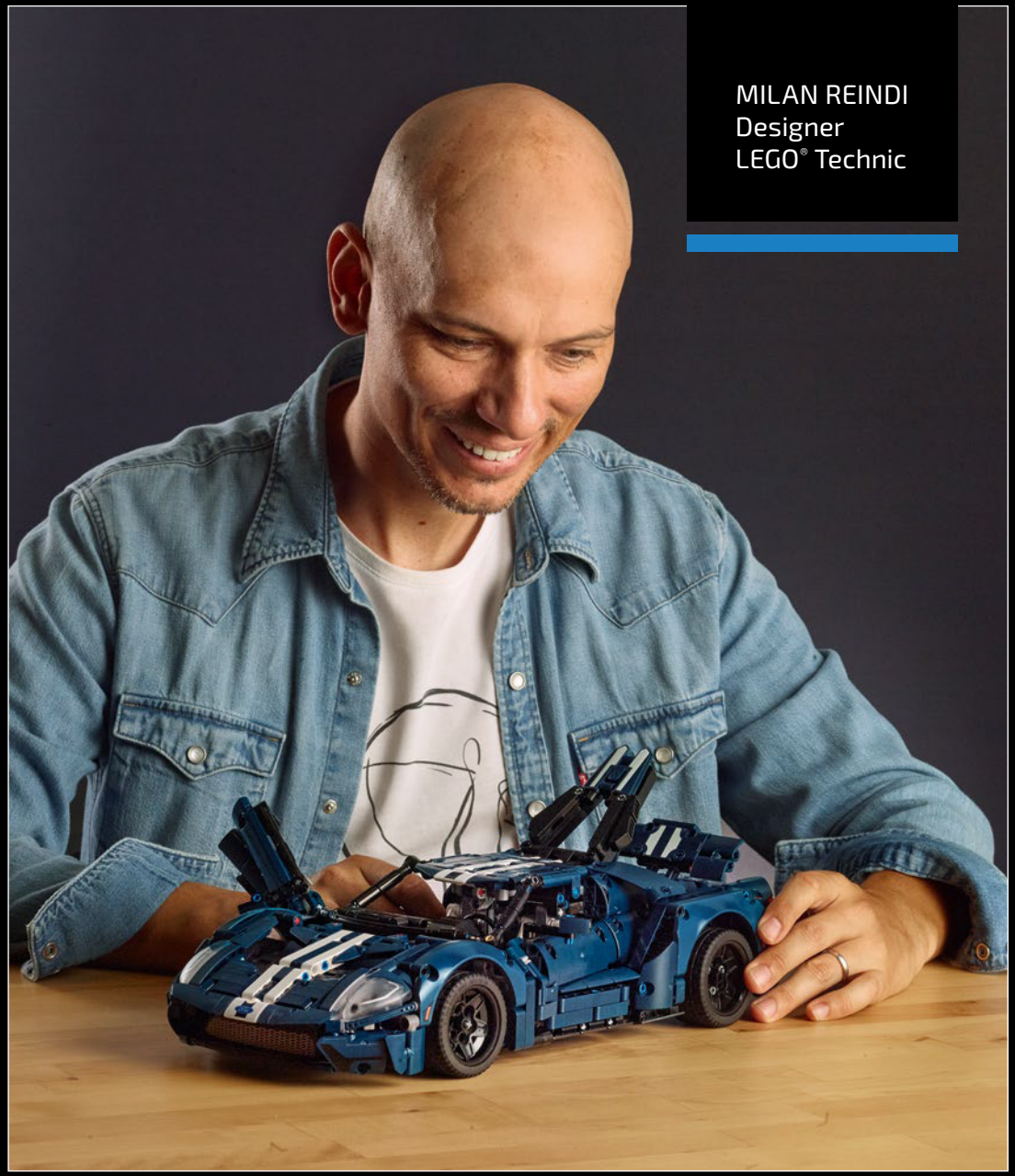

MILAN REINDI
Designer
LEGO® Technic

‘YOU CAN’T BUILD A REPUTATION ON WHAT YOU ARE GOING TO DO.’

Henry Ford

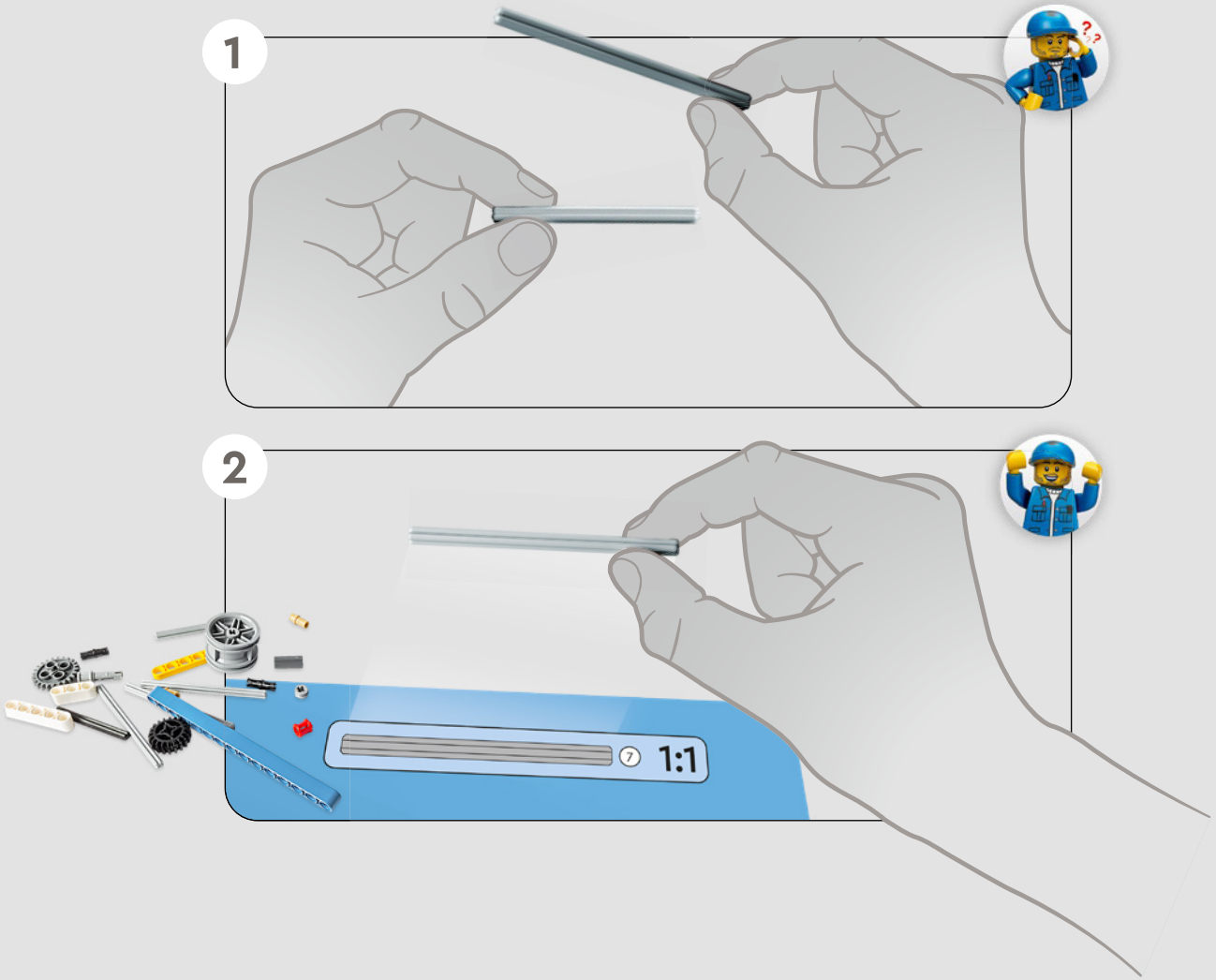
1
2
1:1

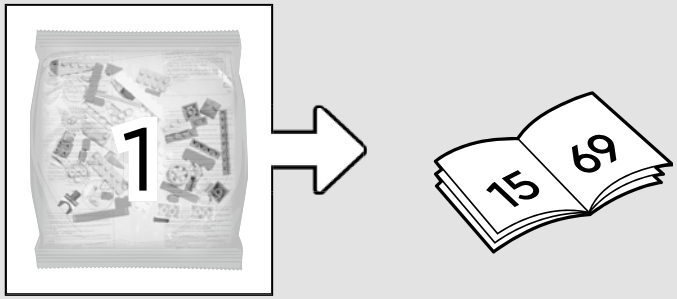
1
15
69

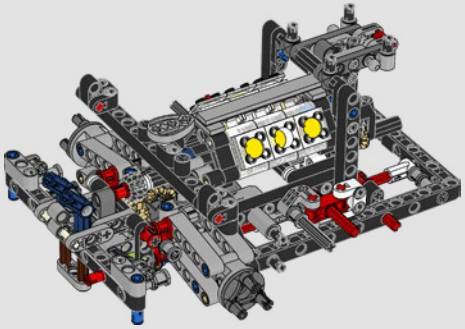

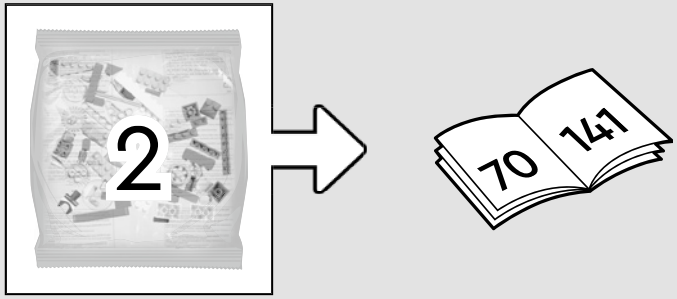
2
70
141

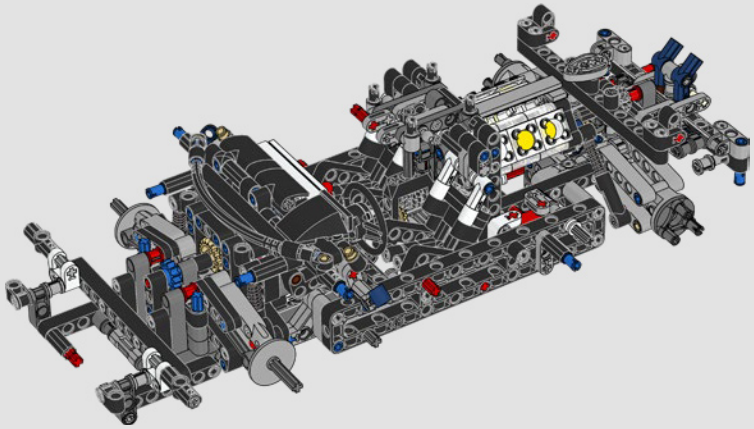

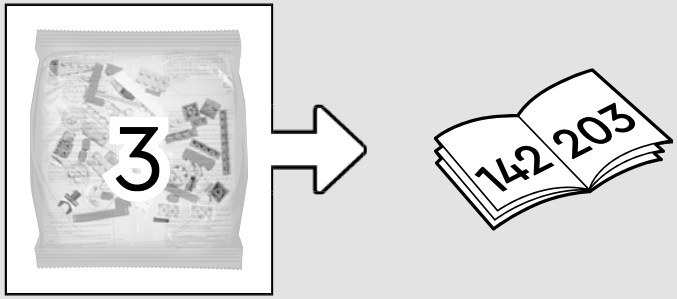
3
142
203

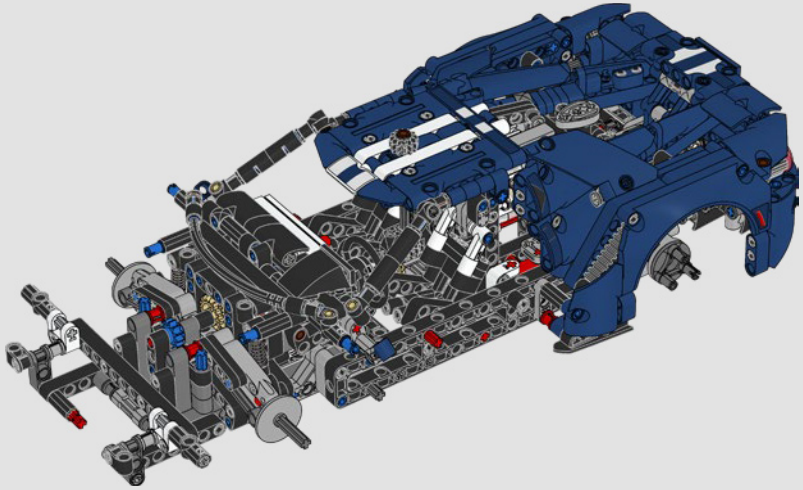

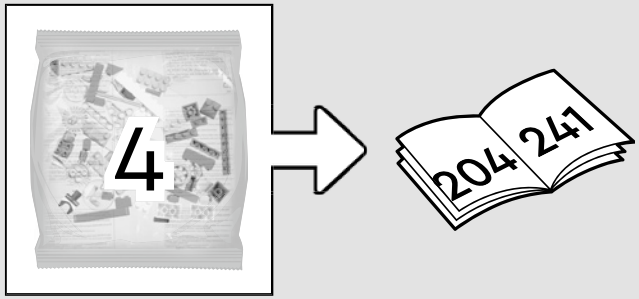
4
204 241

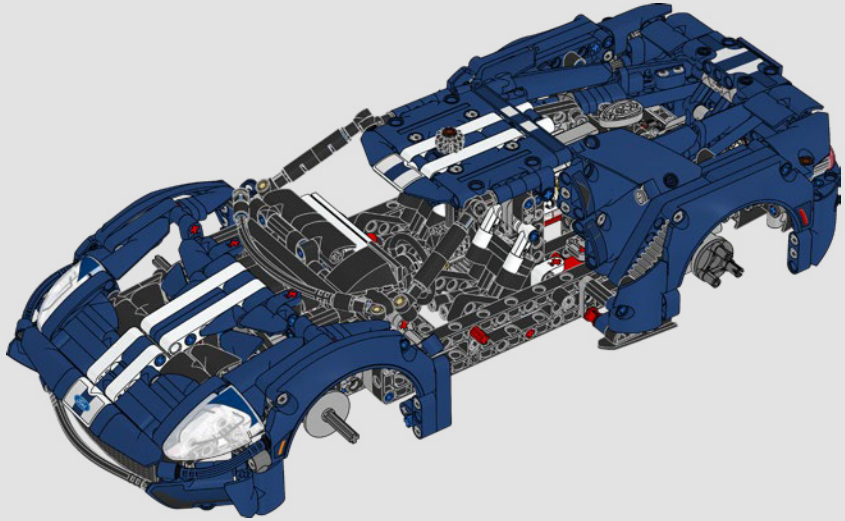

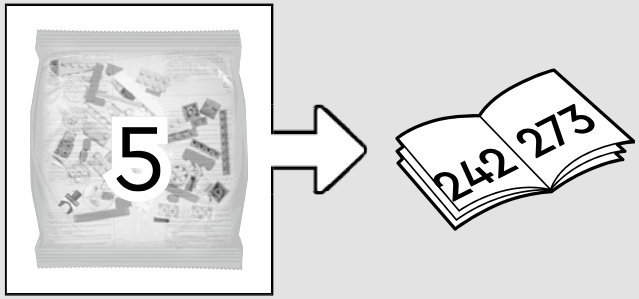
5
242 273

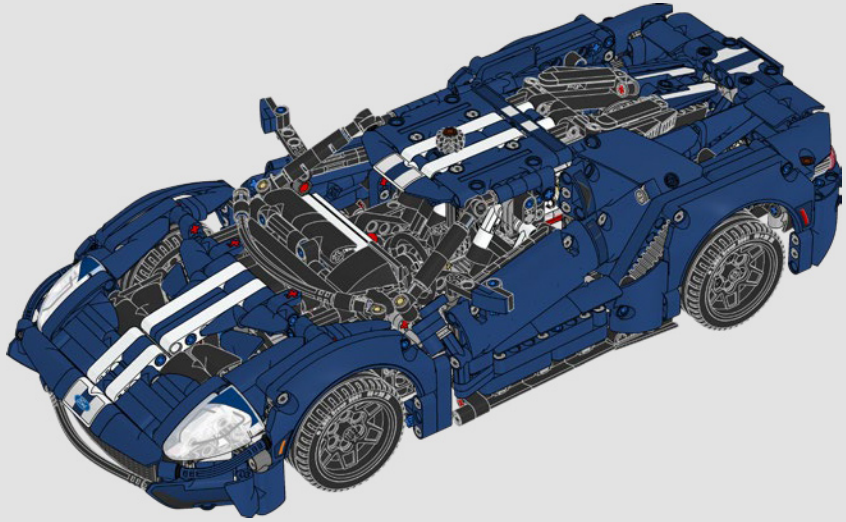

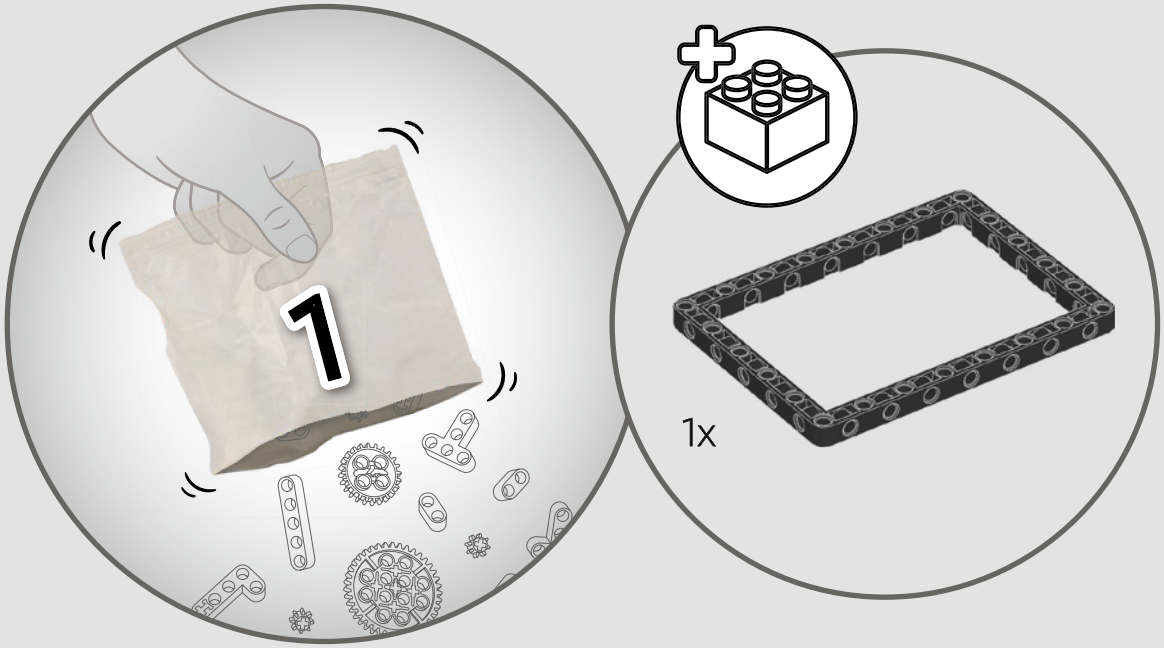
1
1x

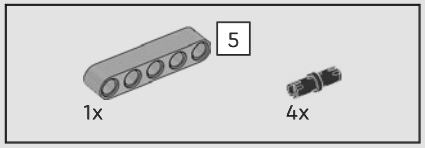

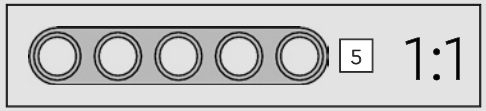

1

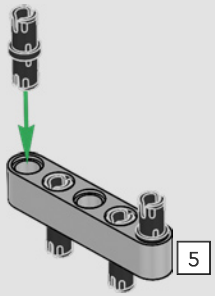

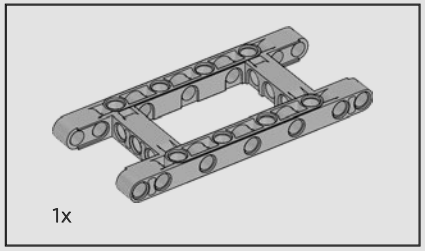

2

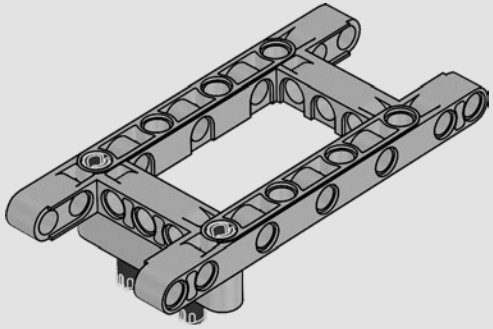

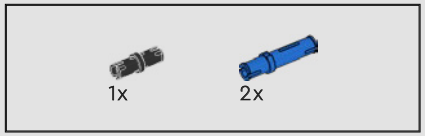

3

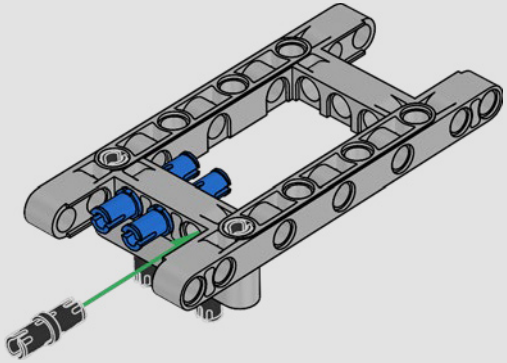

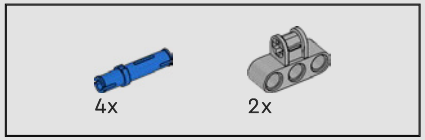

4

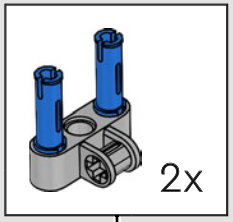

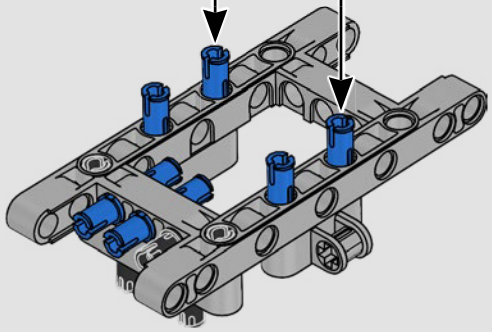

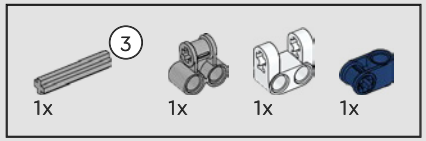

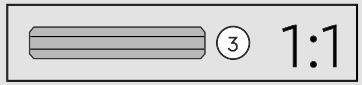

5

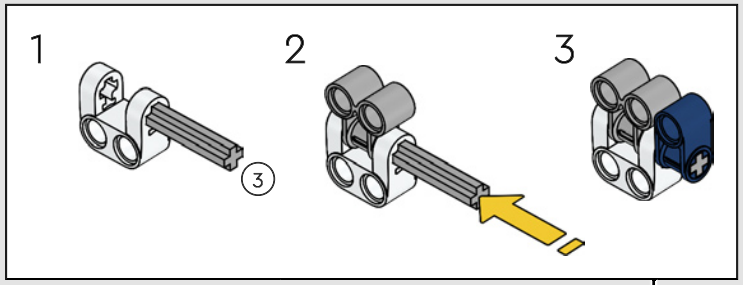

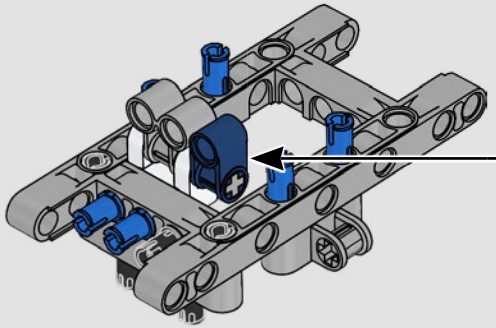

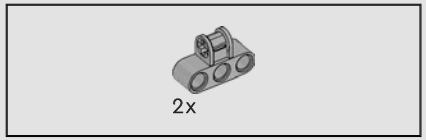

6

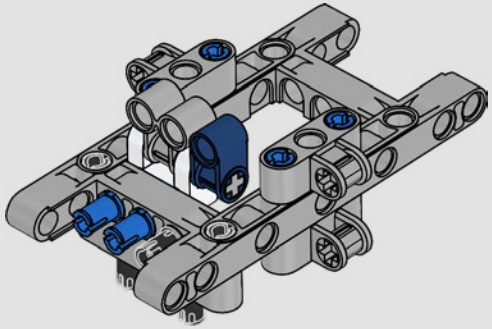

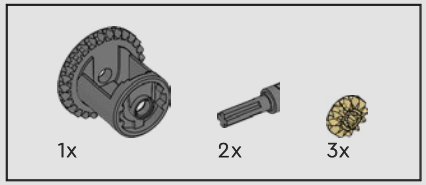

7

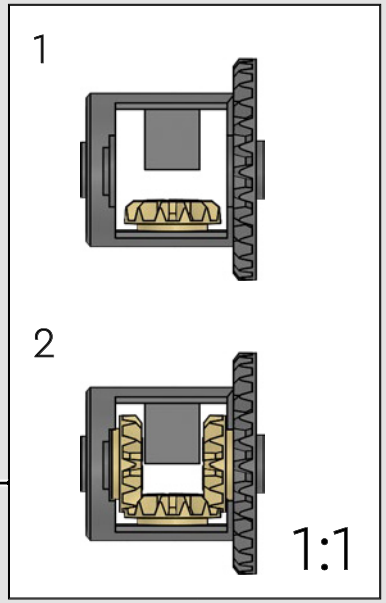

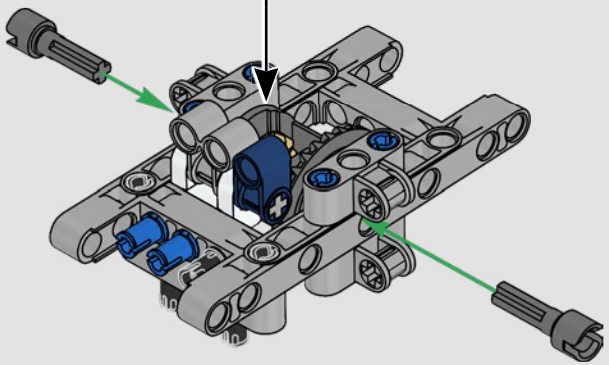

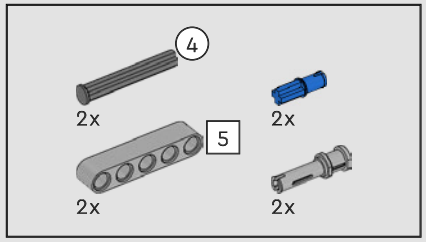

8

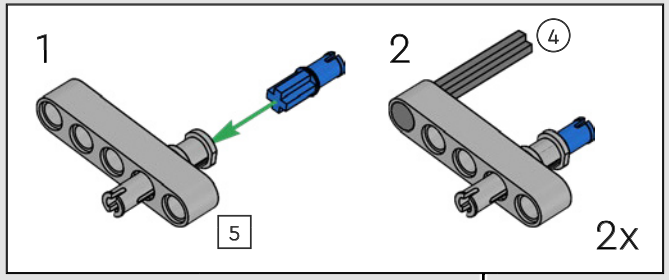

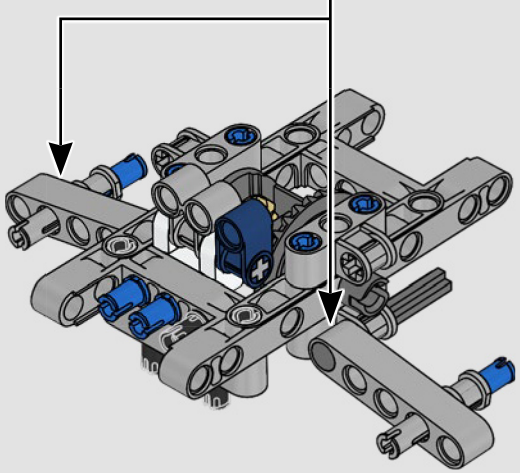

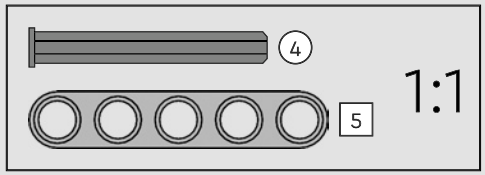

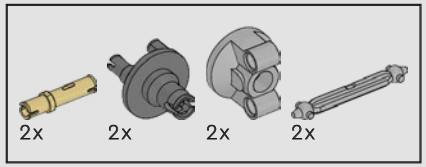

9

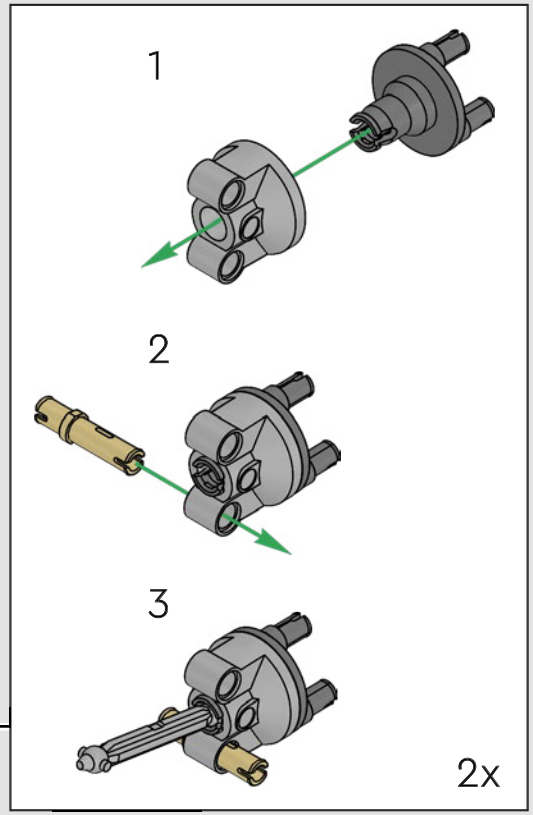

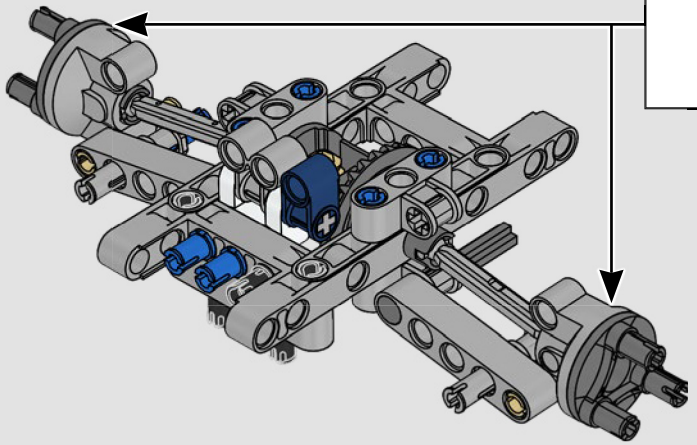

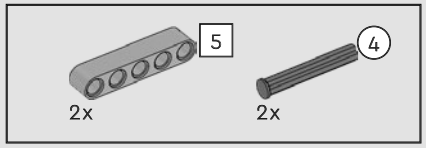

10

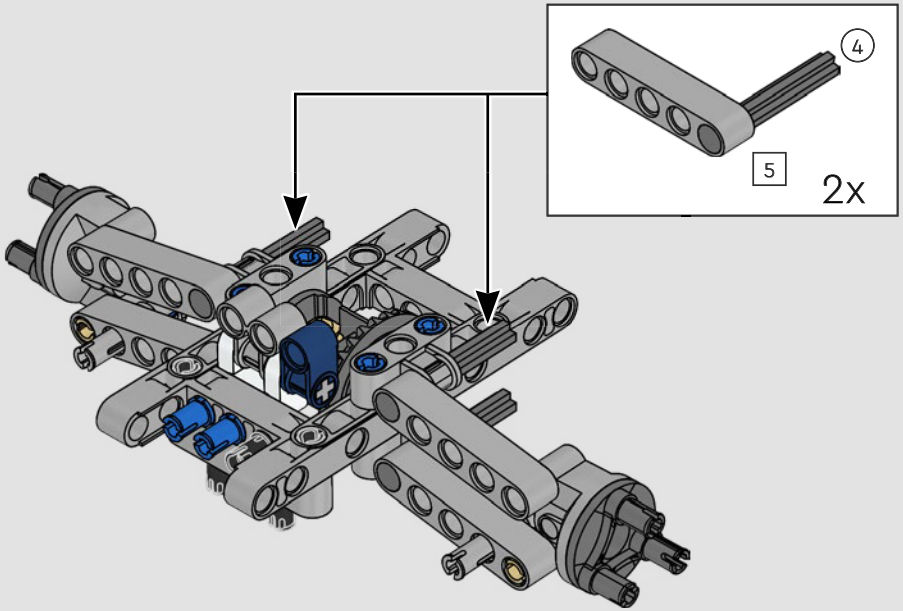

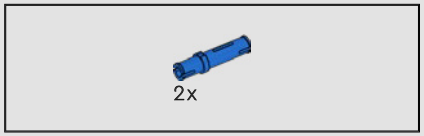

11

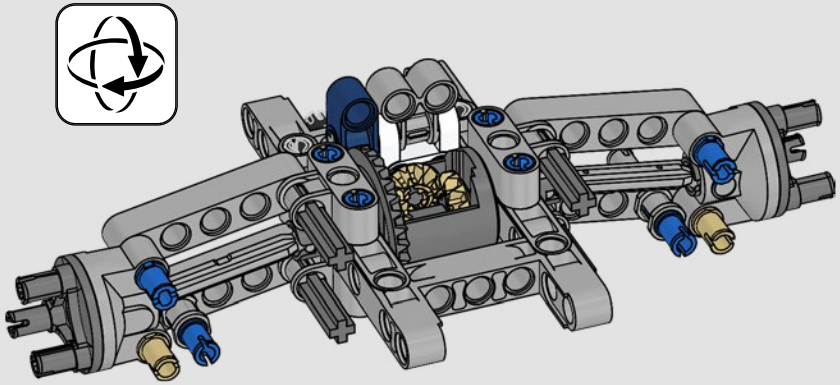

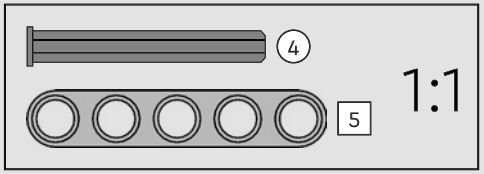

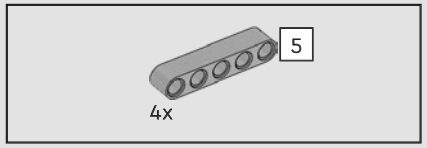

12

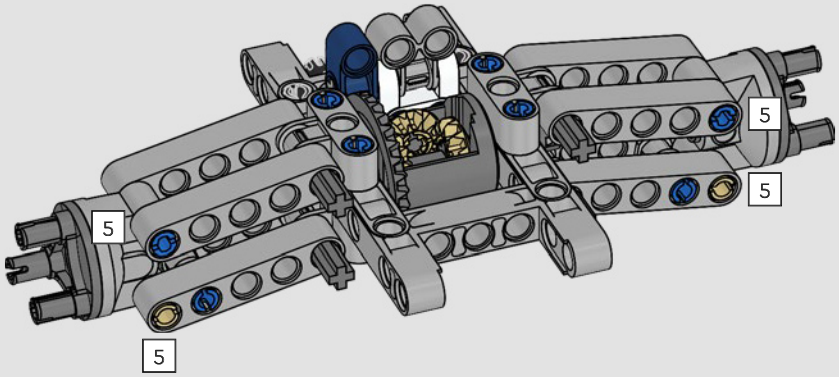

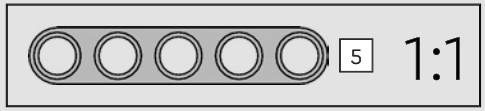

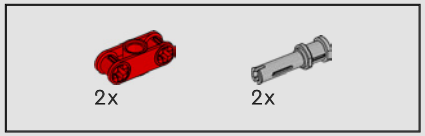

13

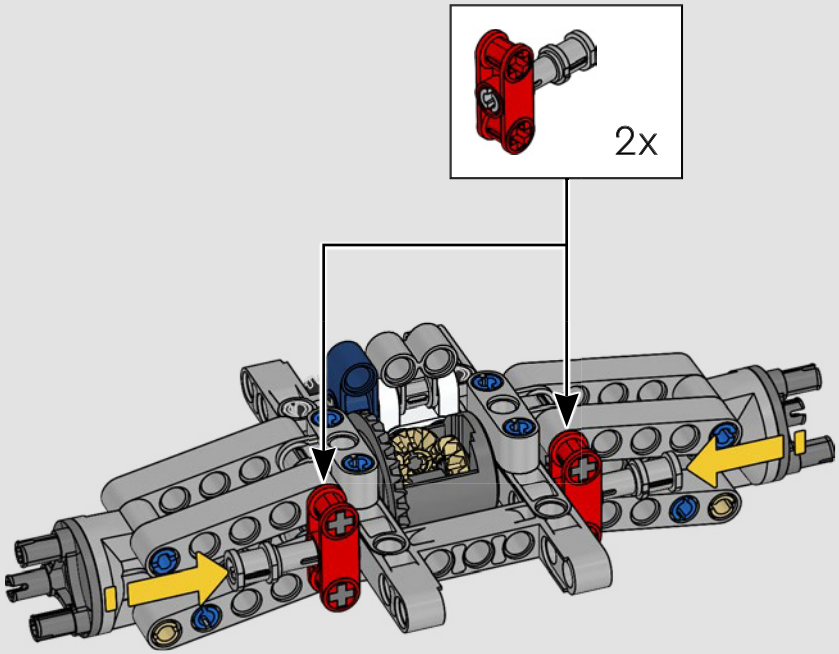

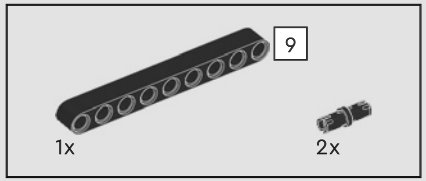

14

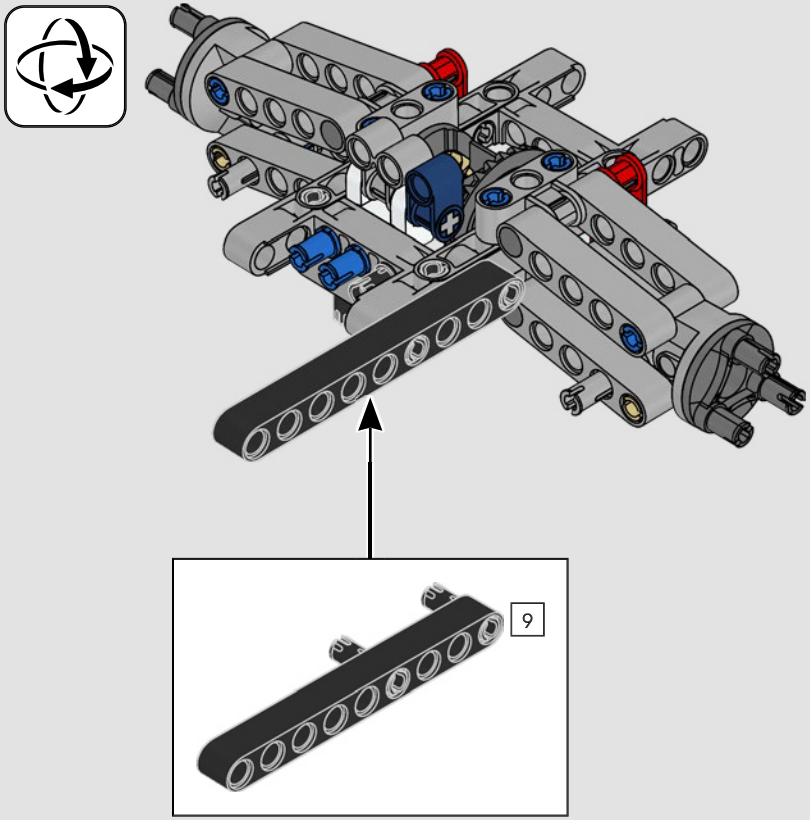

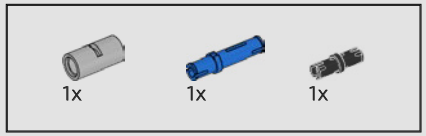

15

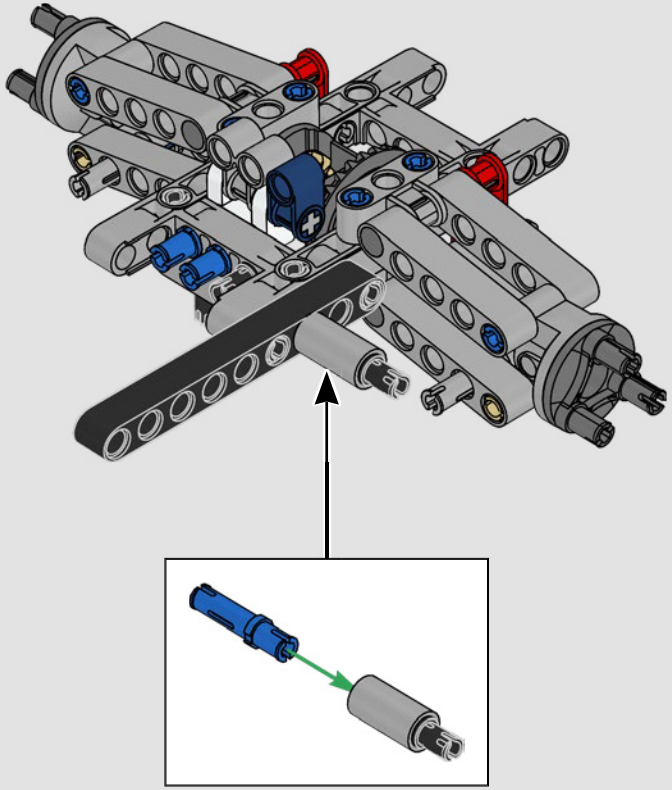

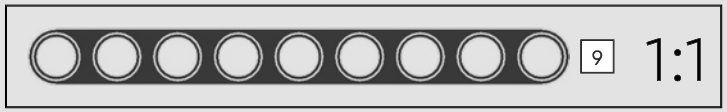

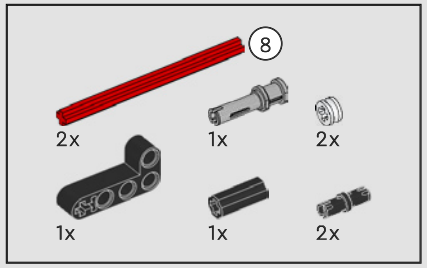

16

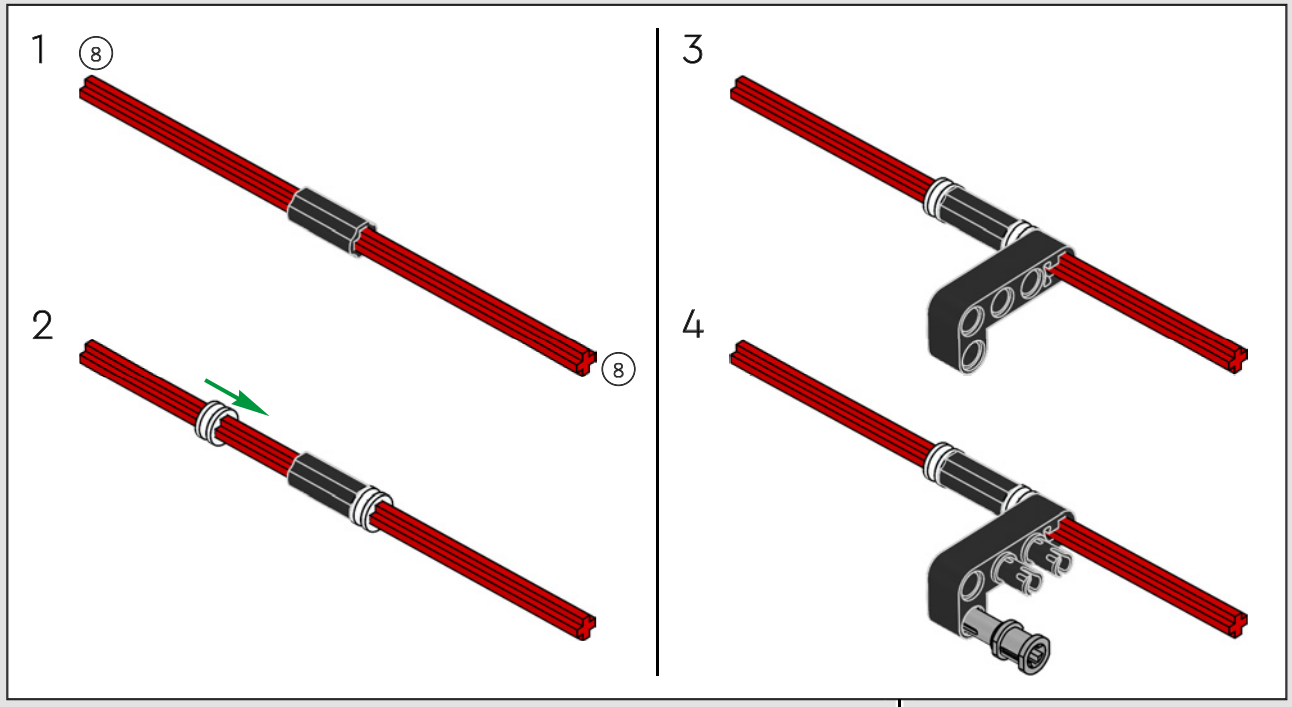

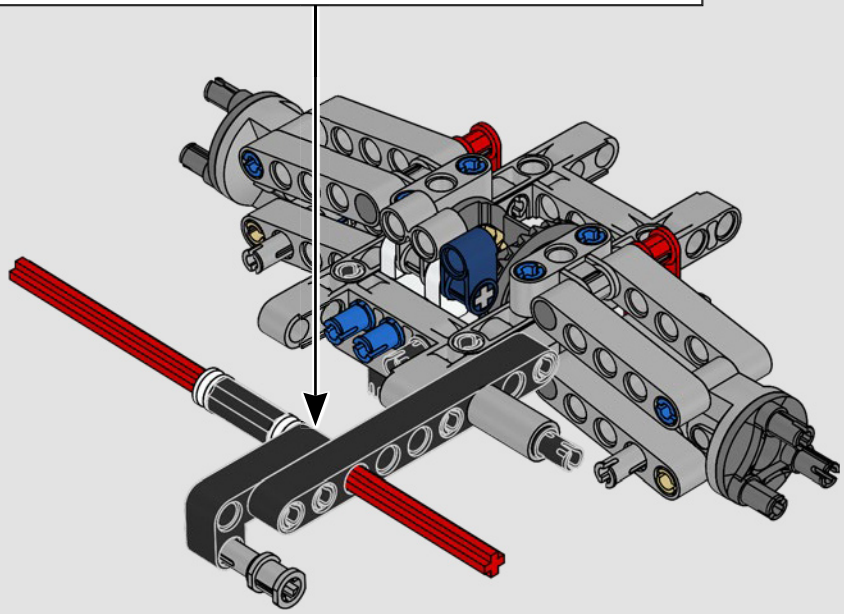

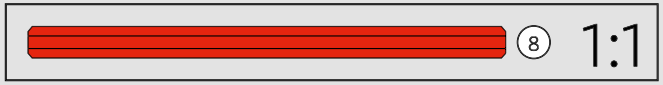

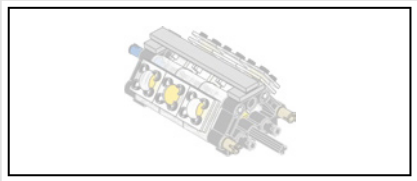

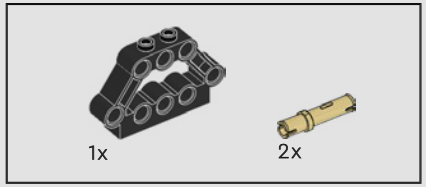

17

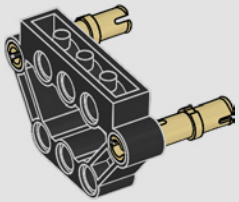

18

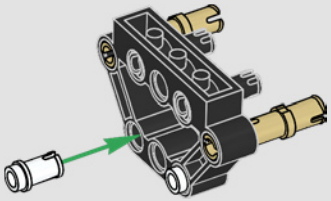

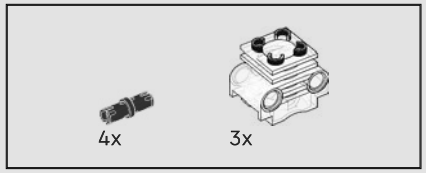

19

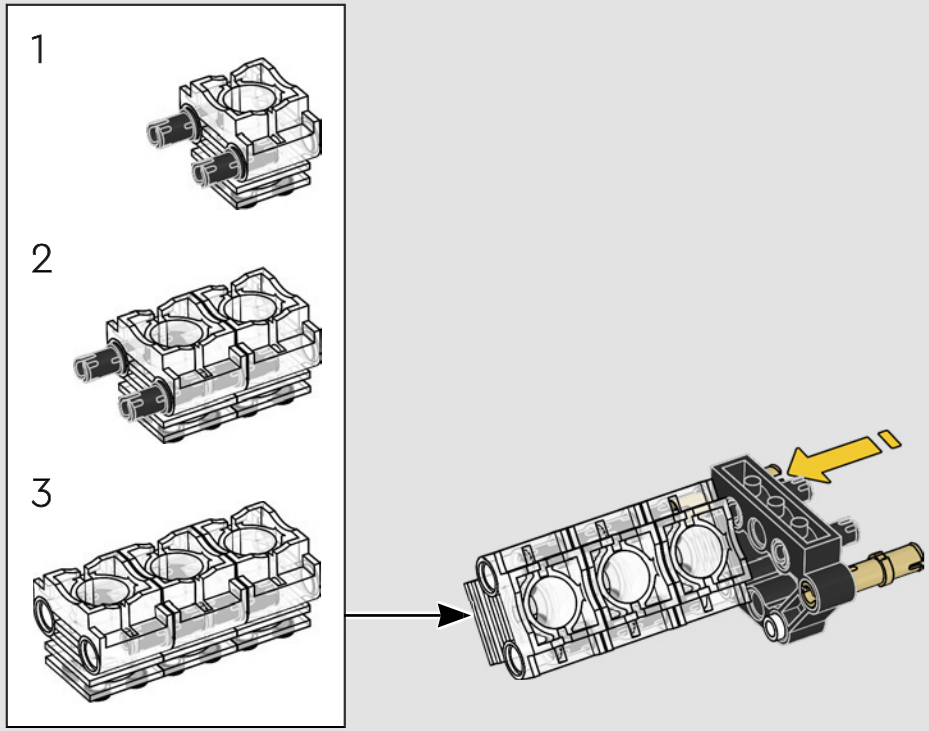

20

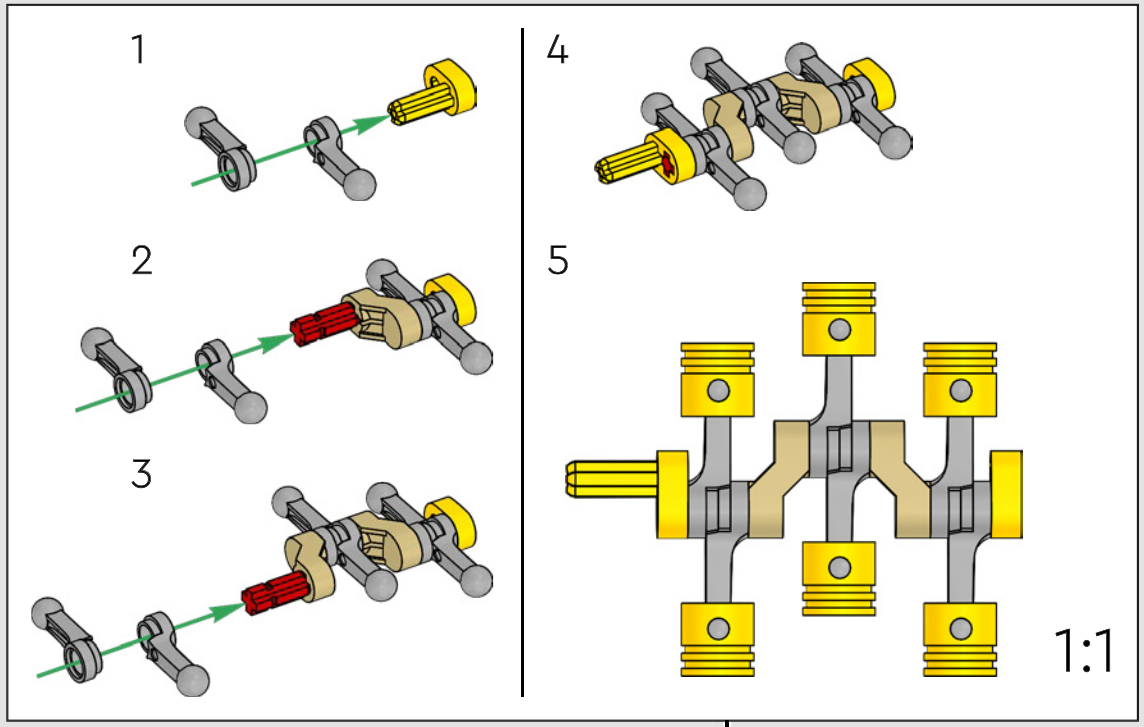

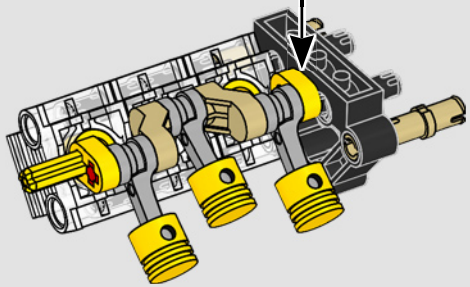

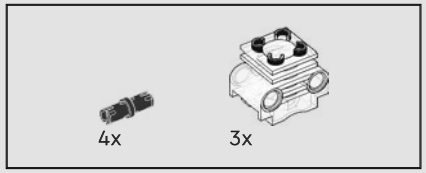

21

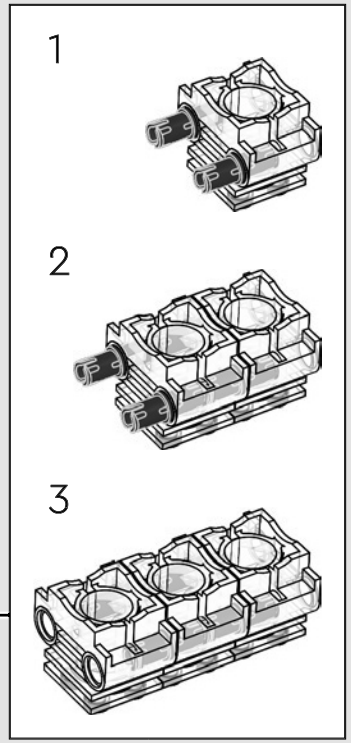

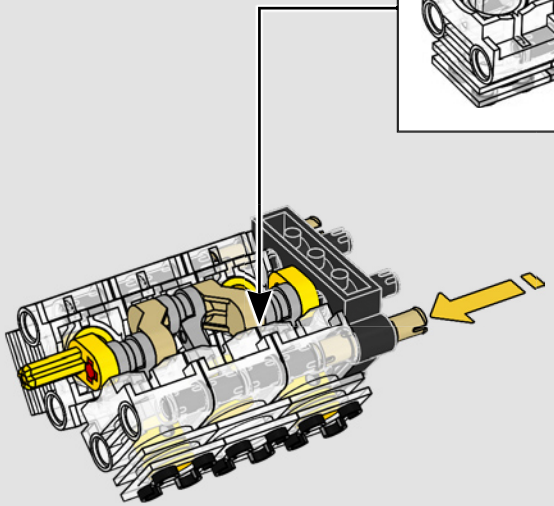

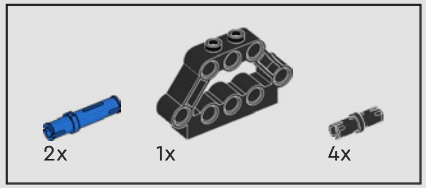

22

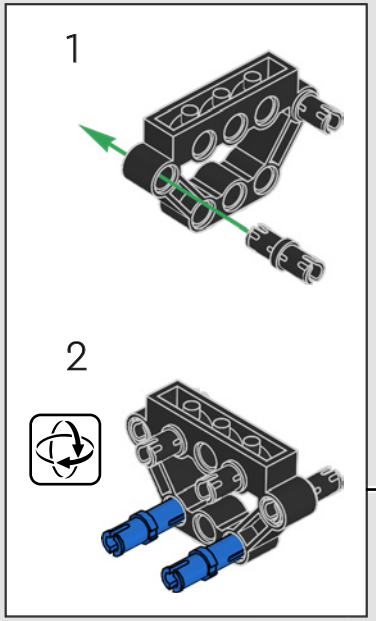

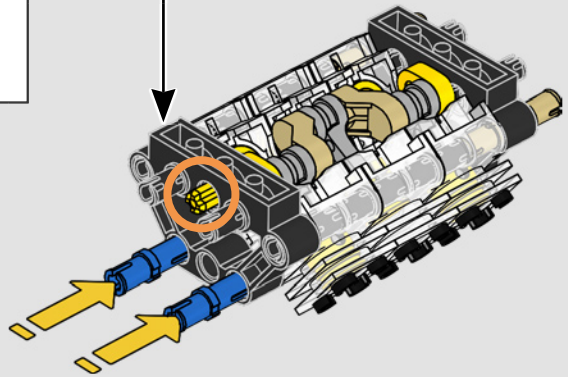

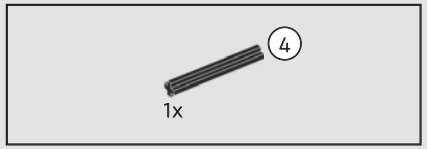

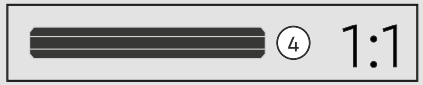

23

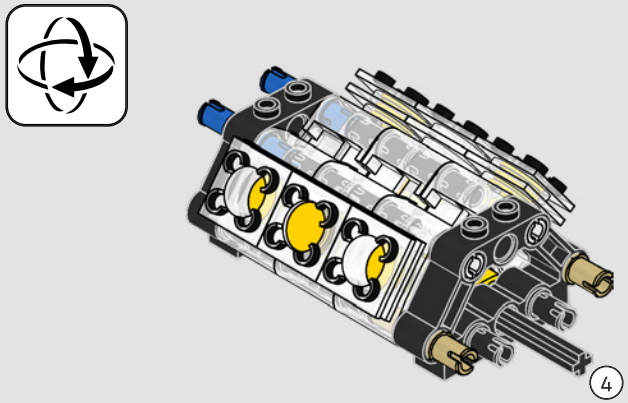

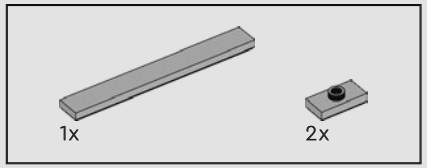

24

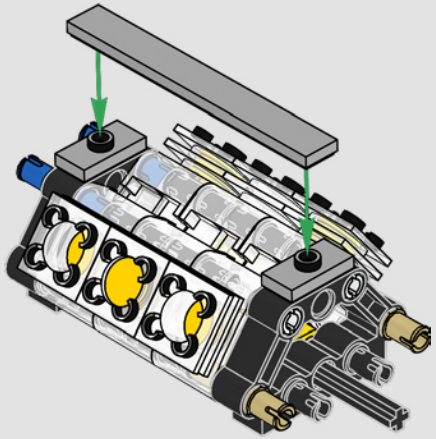

25

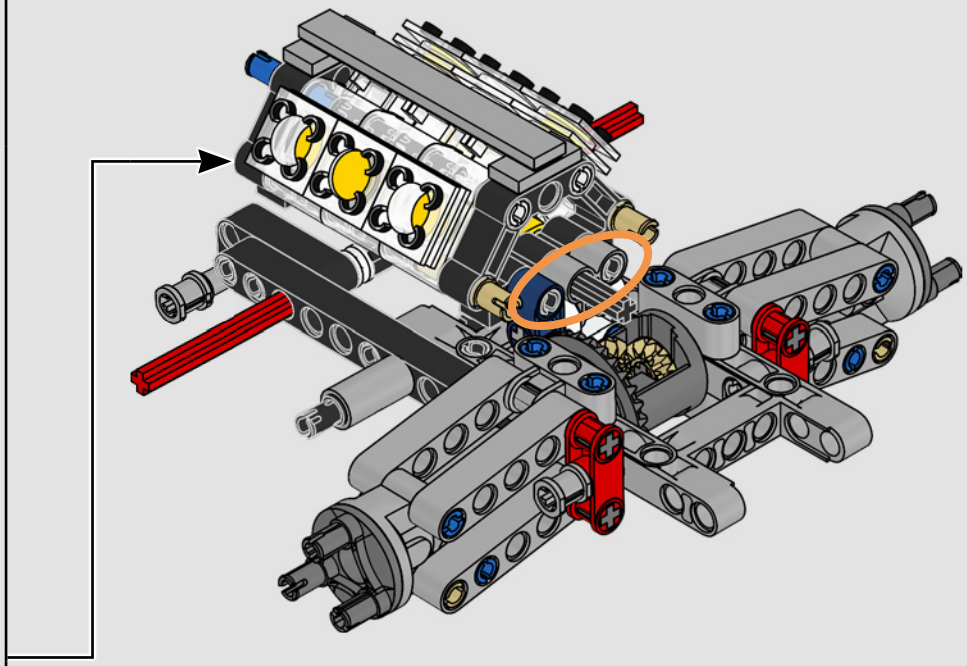

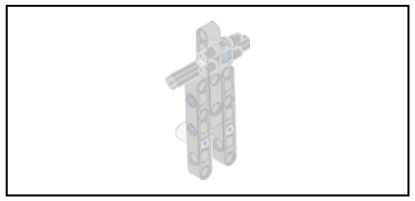

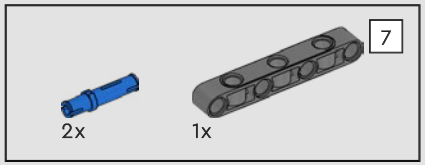

26

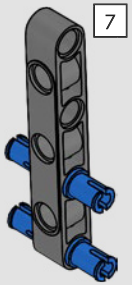

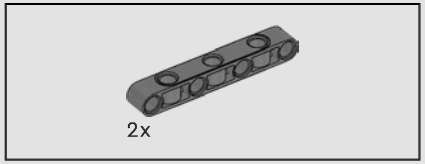

27

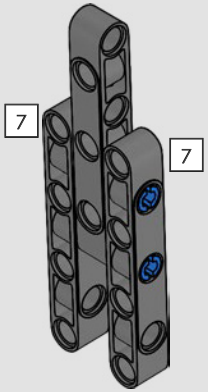

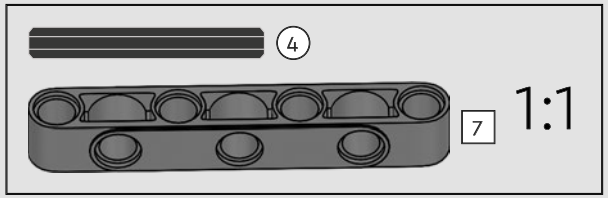

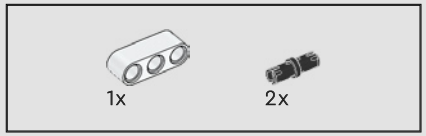

28

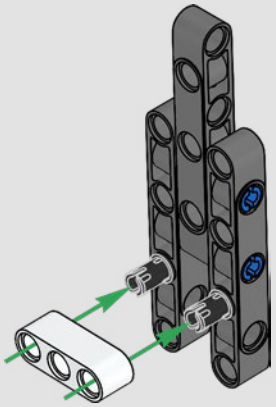

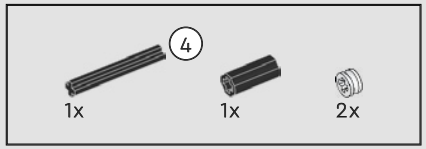

29

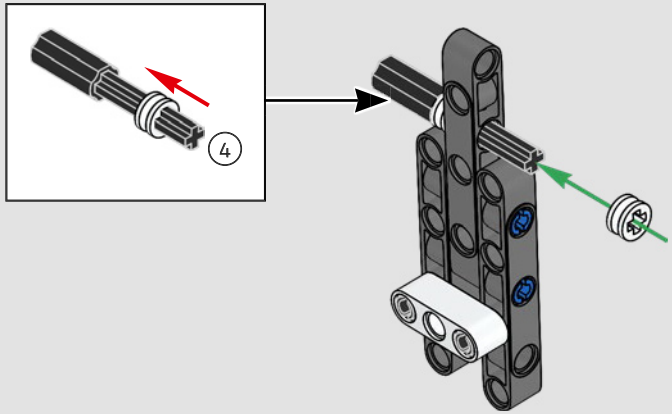

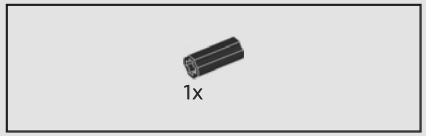

30

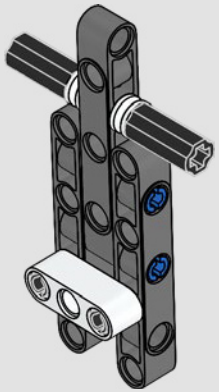

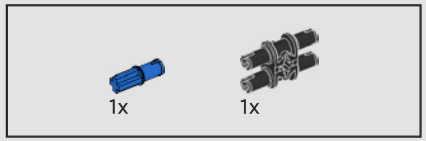

31

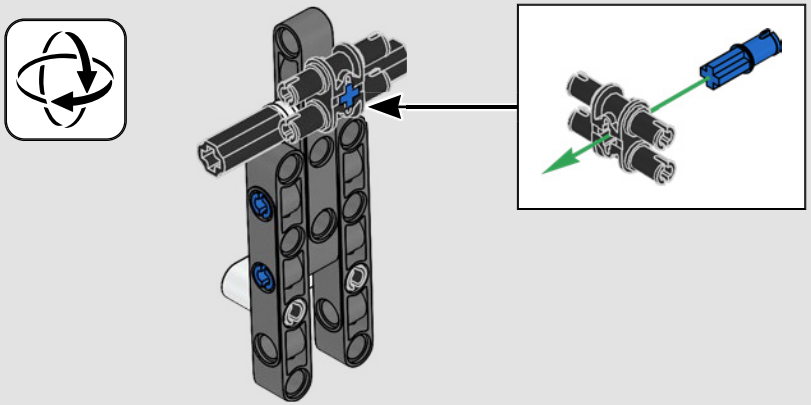

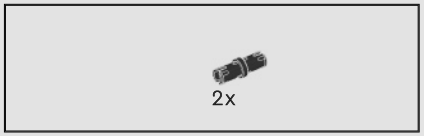

32

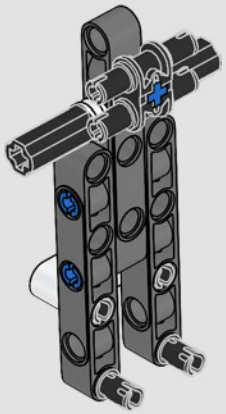

33

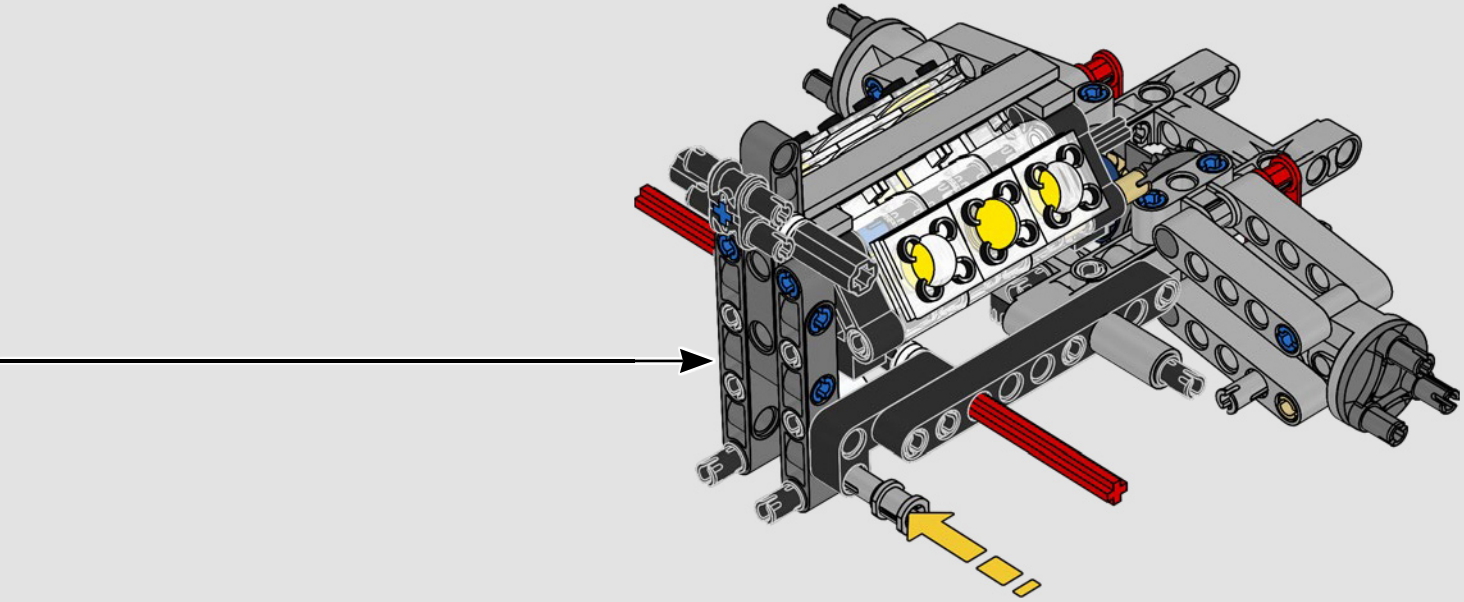

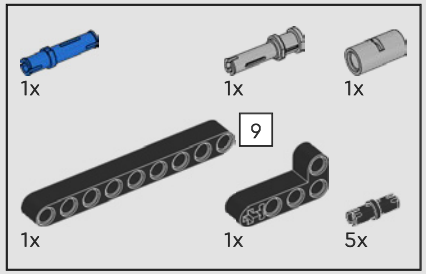

34

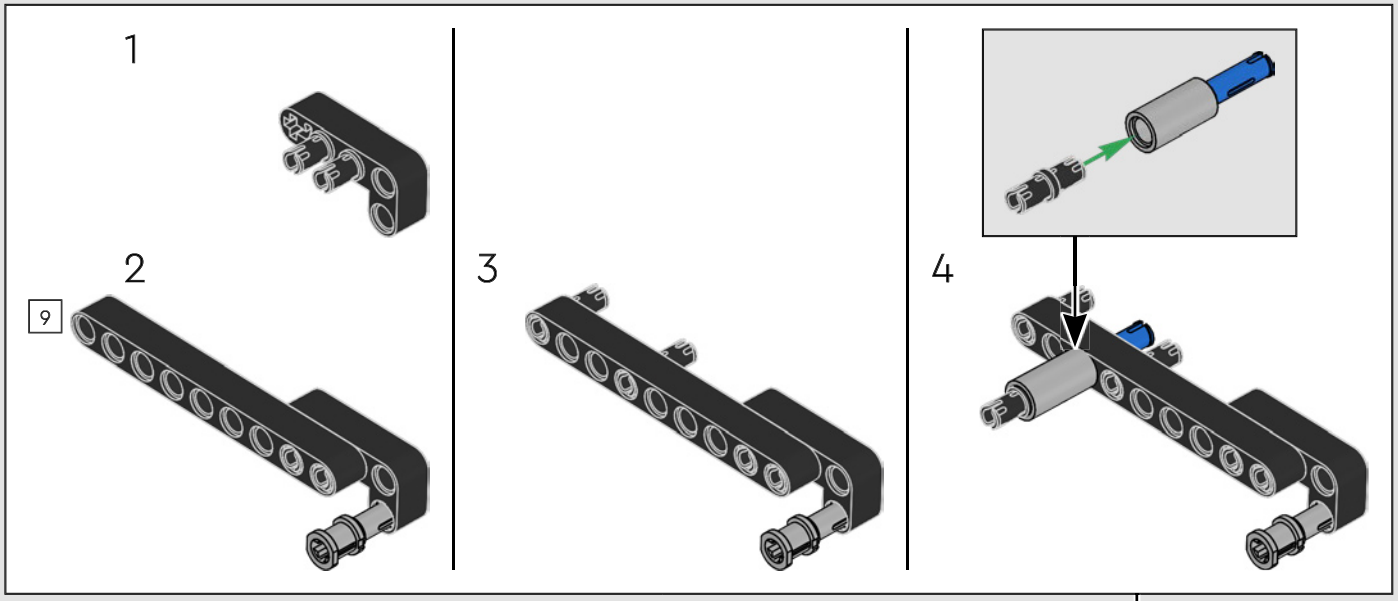

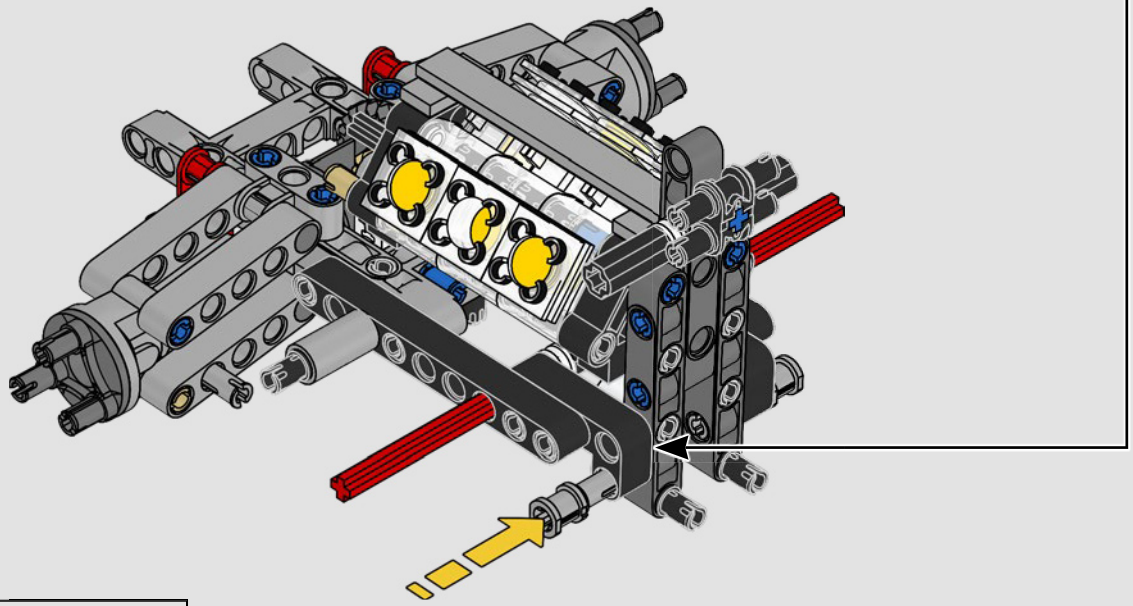

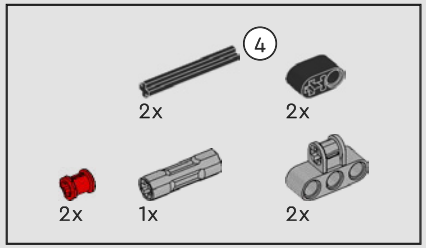

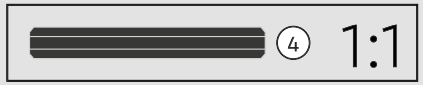

35

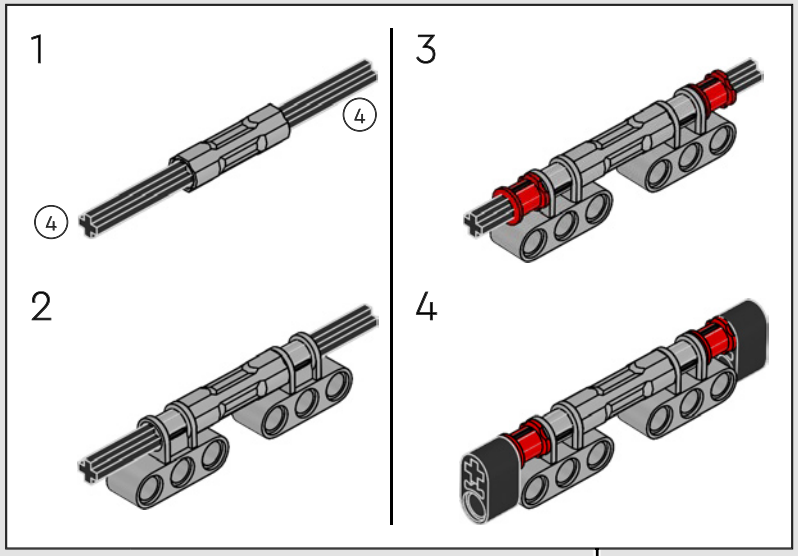

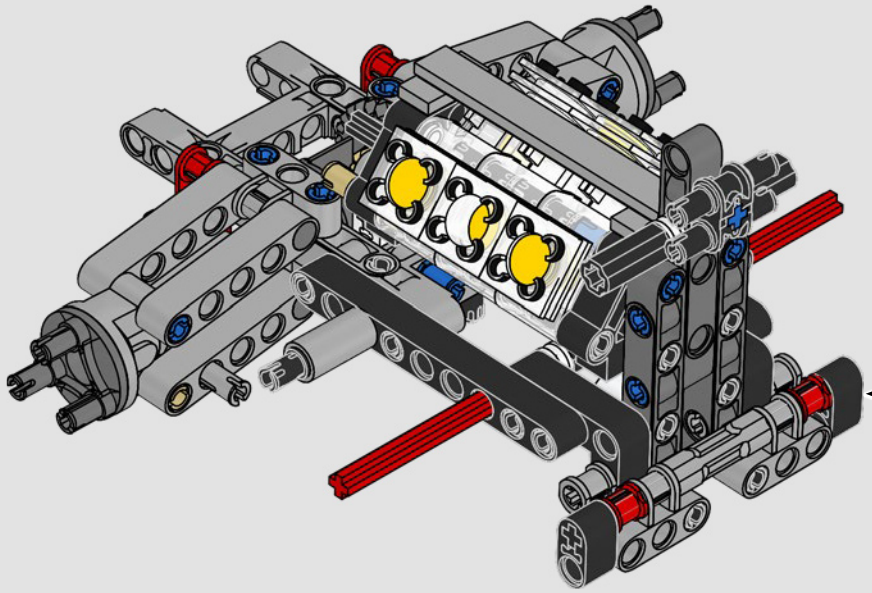

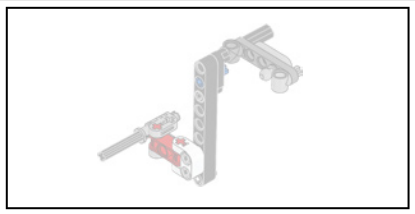

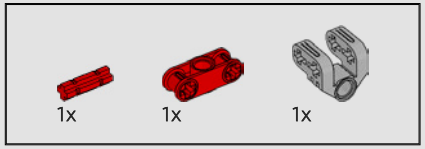

36

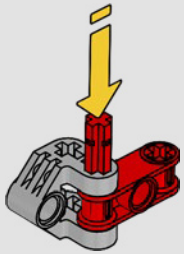

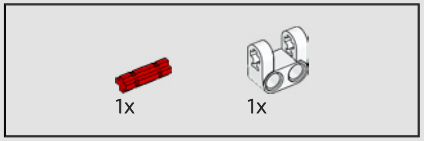

37

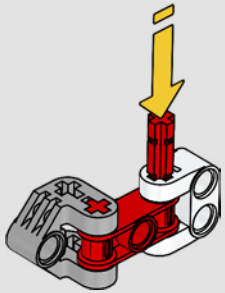

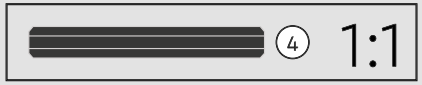

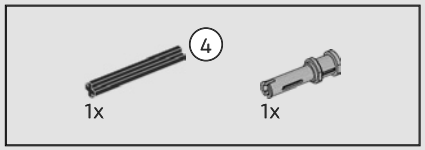

38

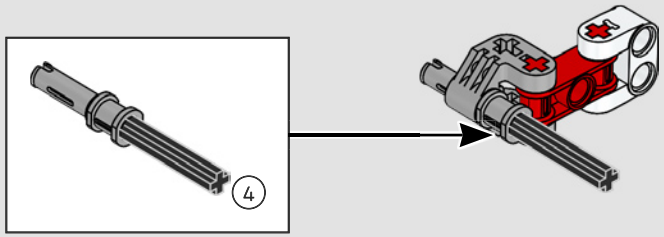

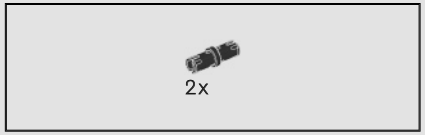

39

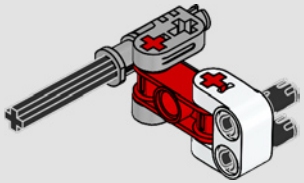

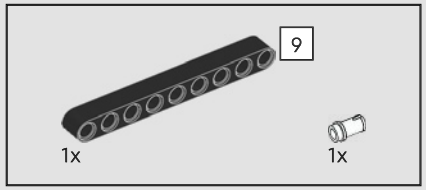

40

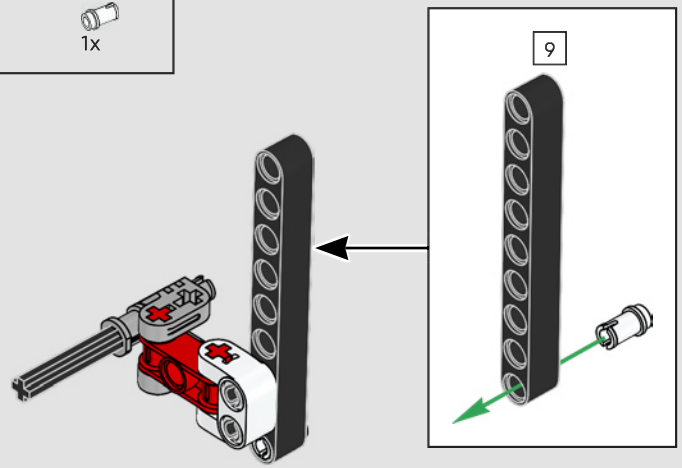

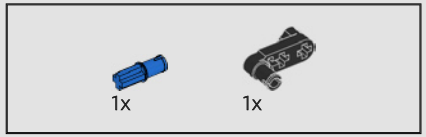

41

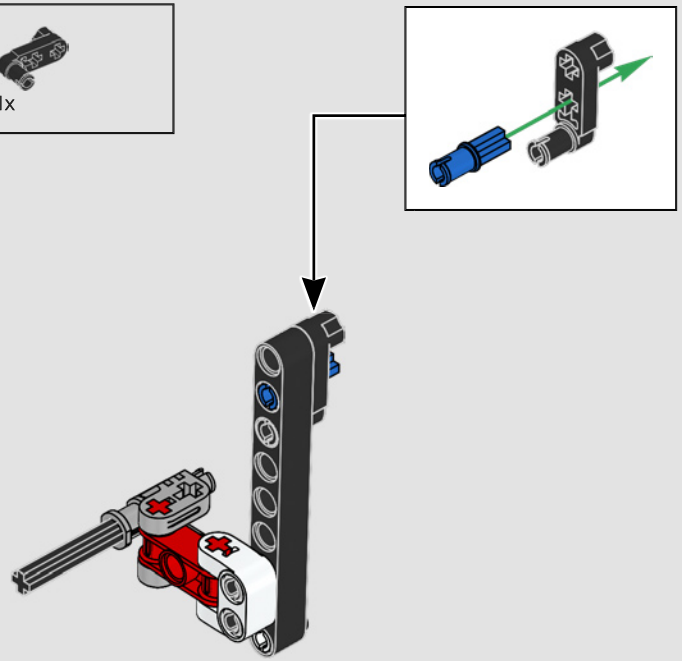

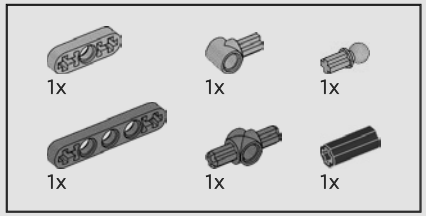

42

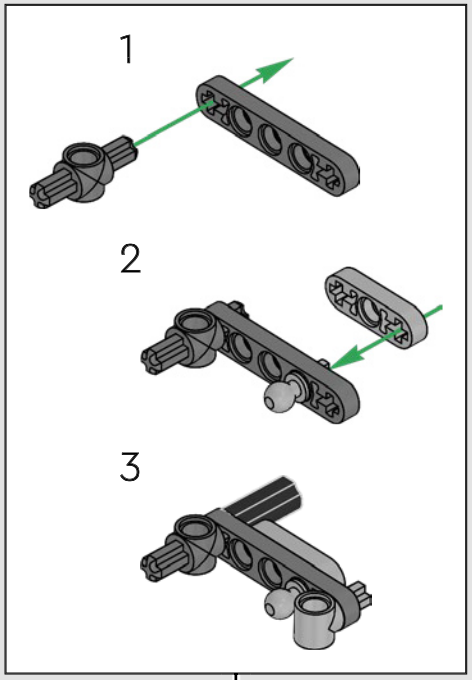

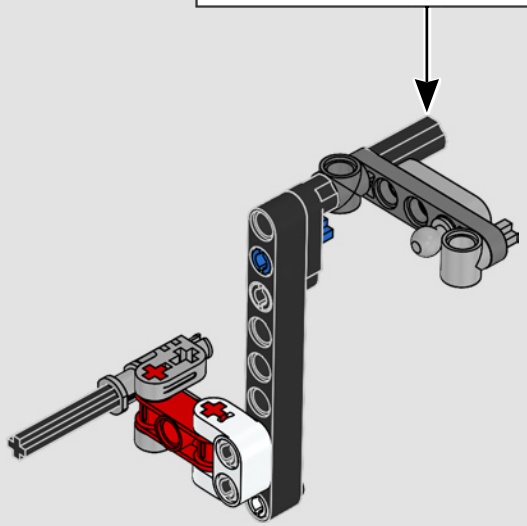

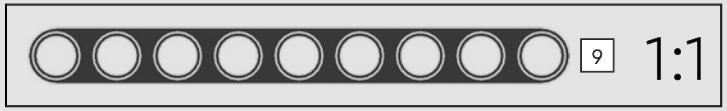

43

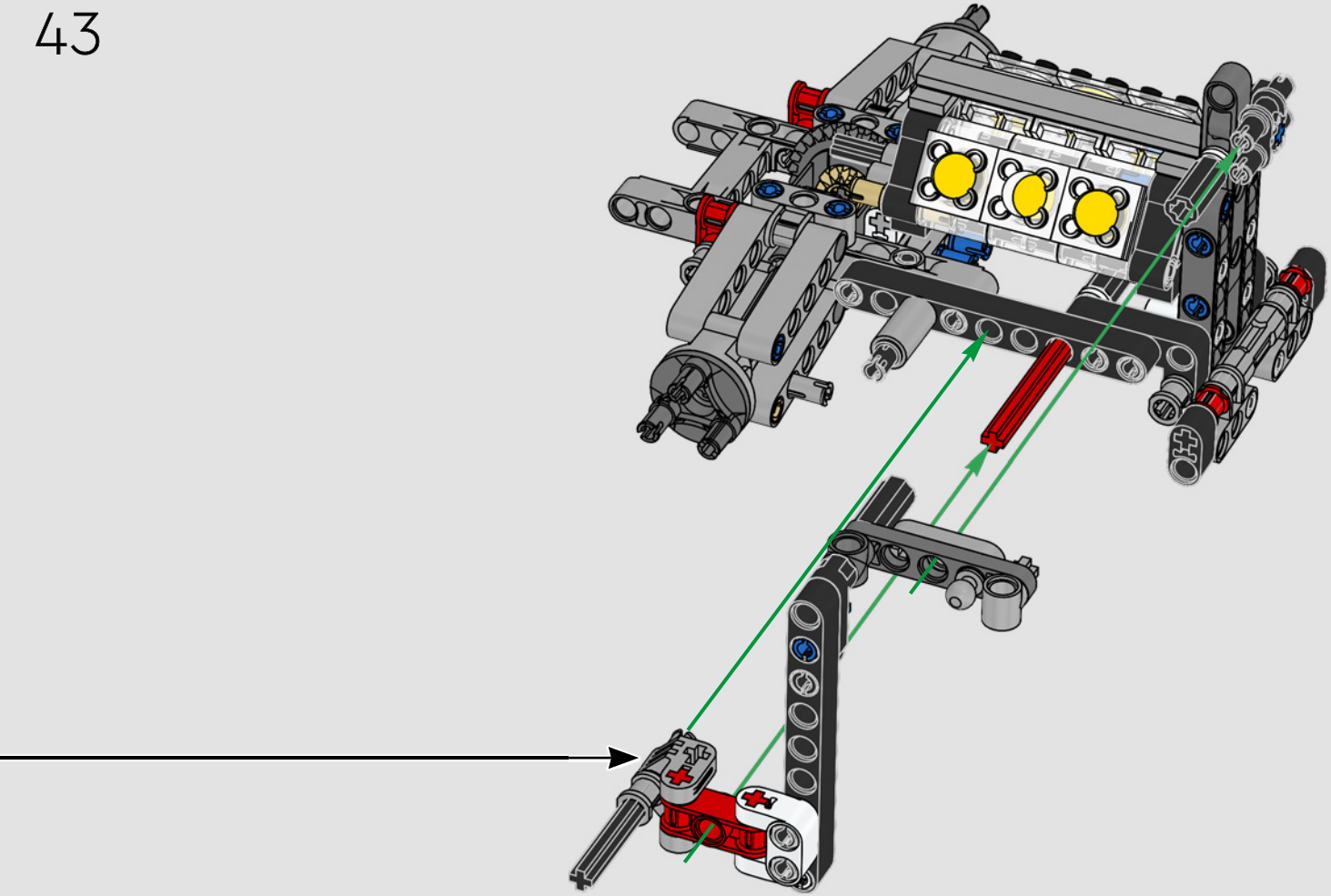

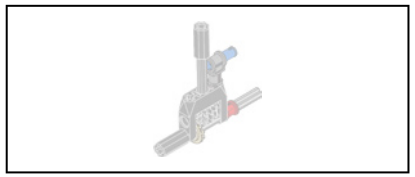

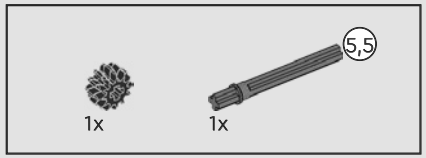

44

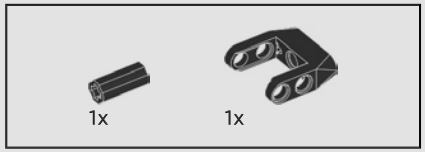

45

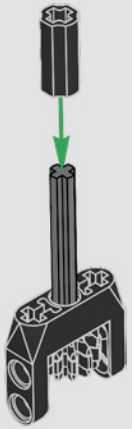

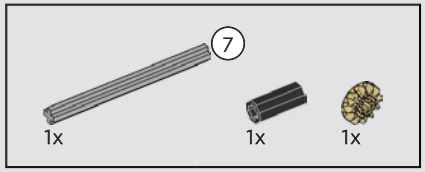

46

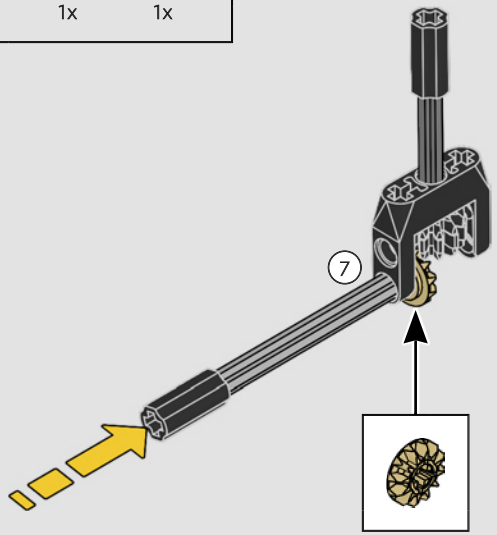

47

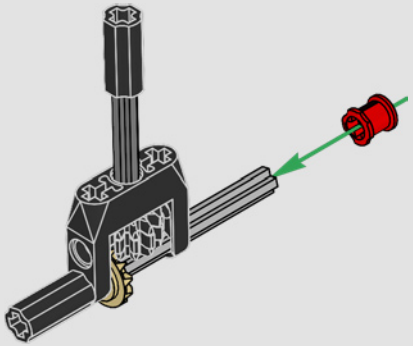

48

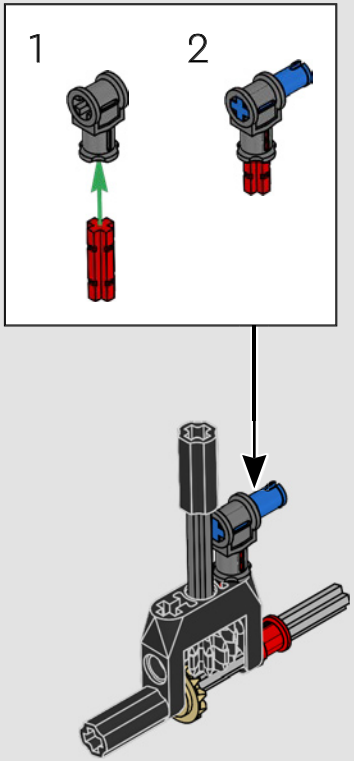

49

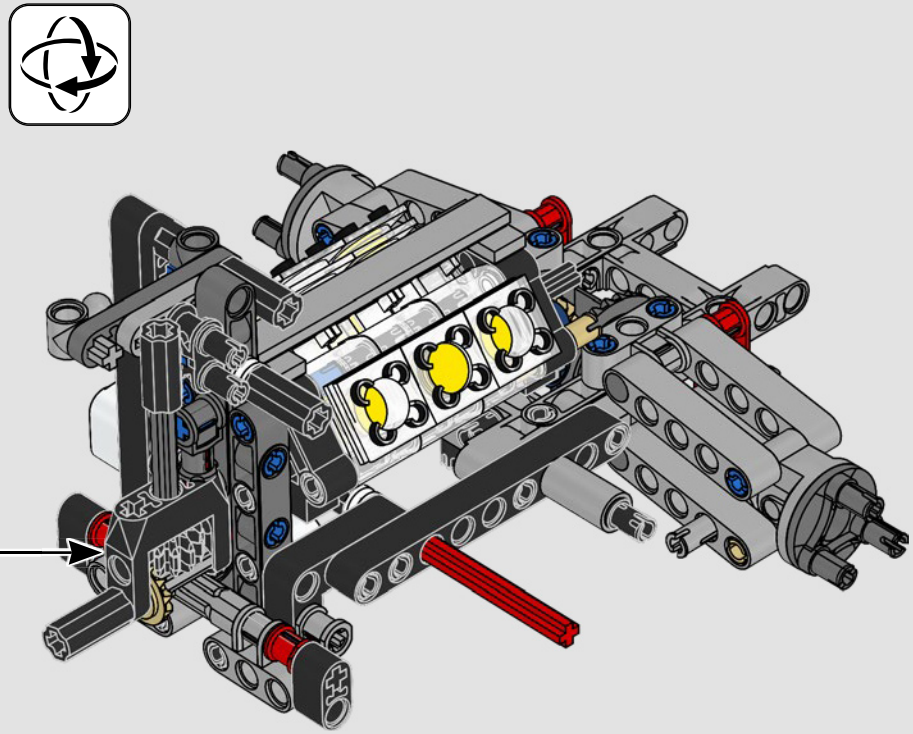

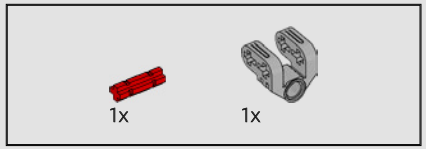

50

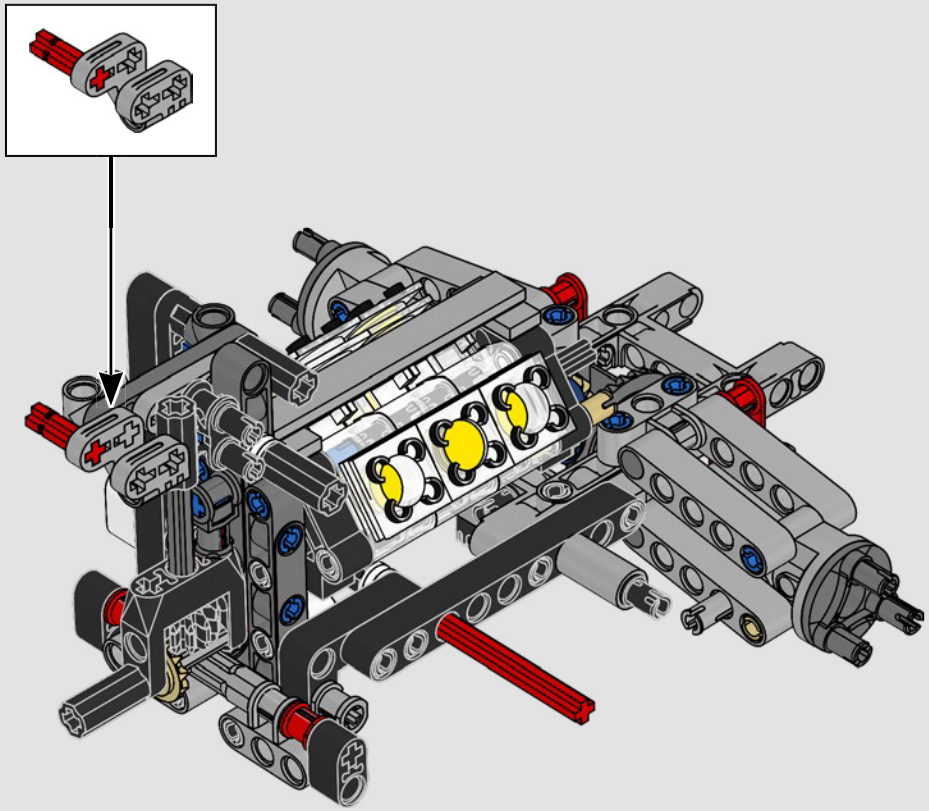

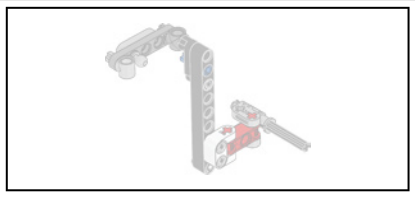

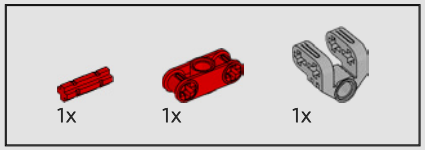

51

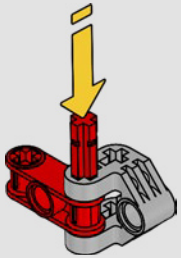

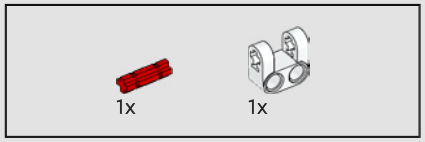

52

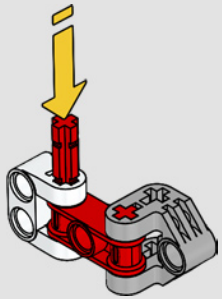

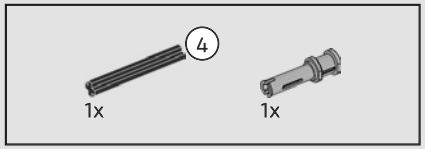

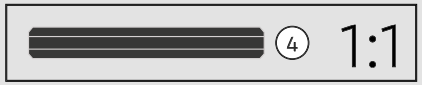

53

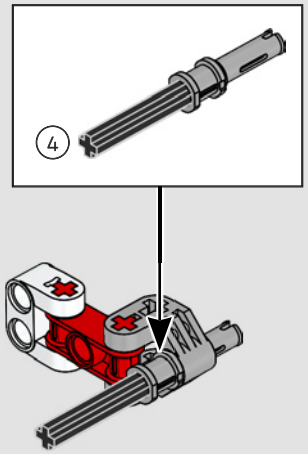

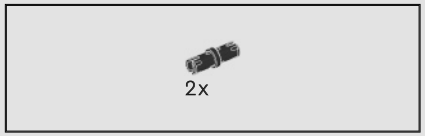

54

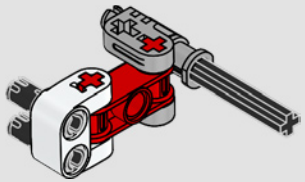

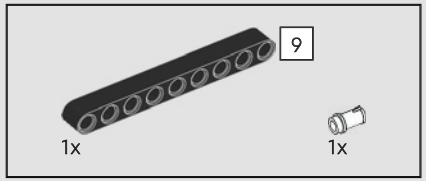

55

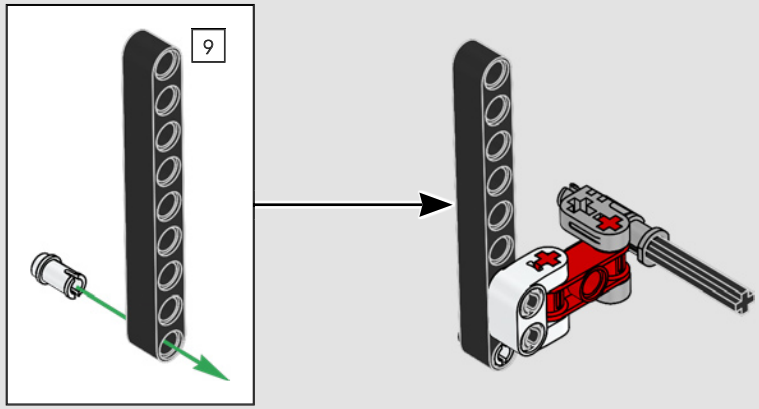

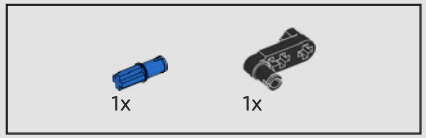

56

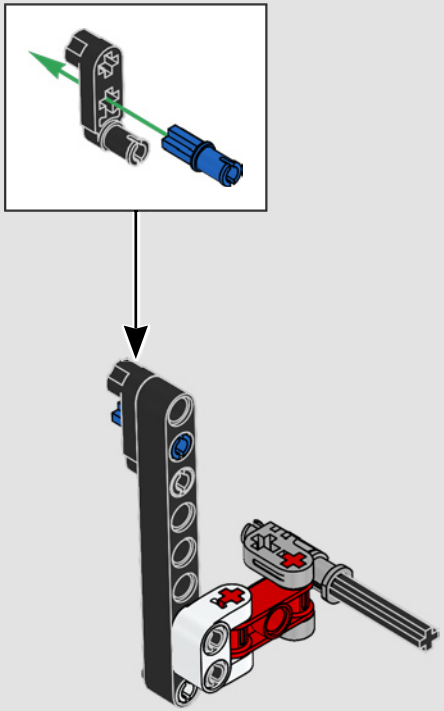

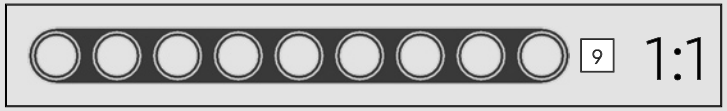

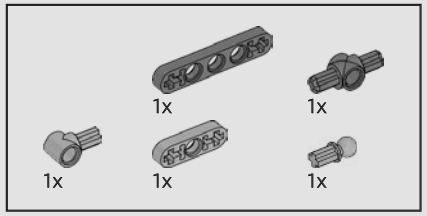

57

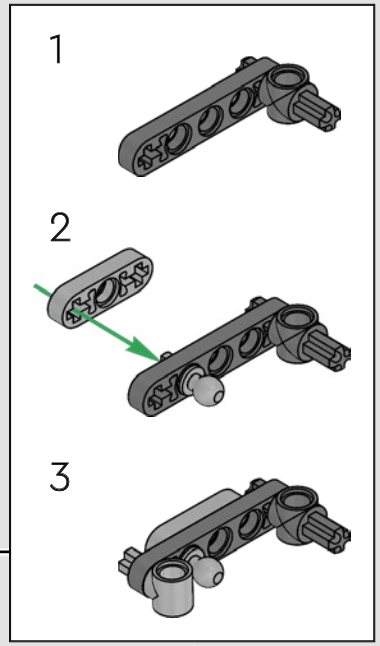

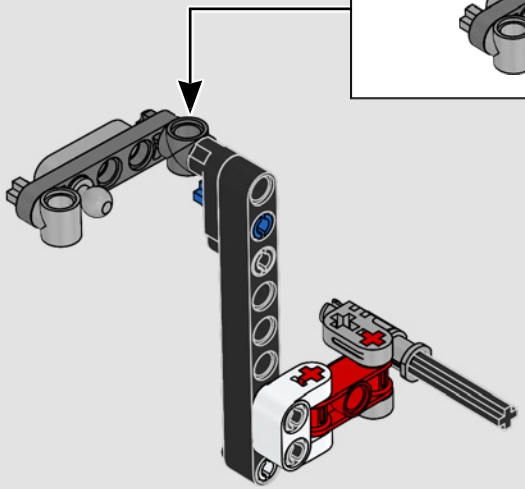

58

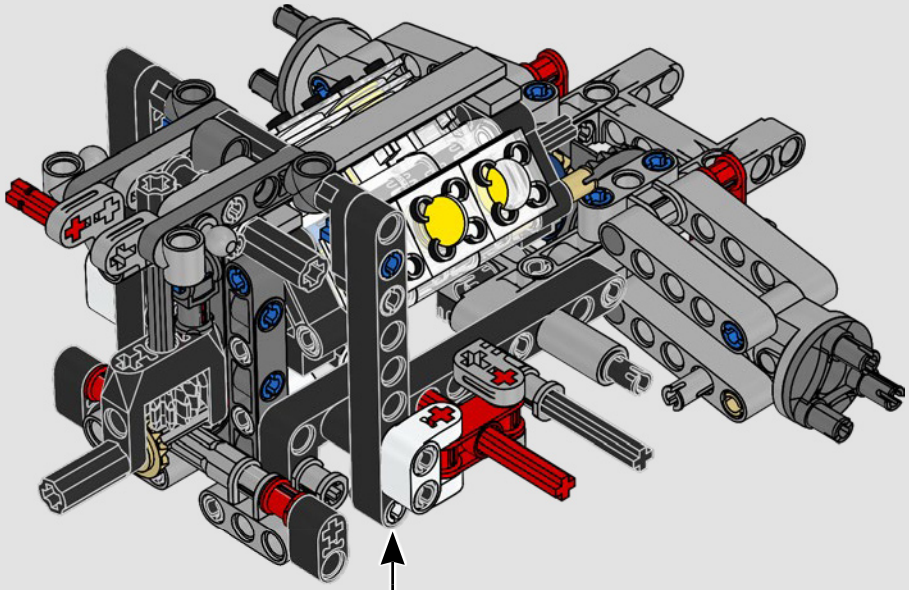

4x

59

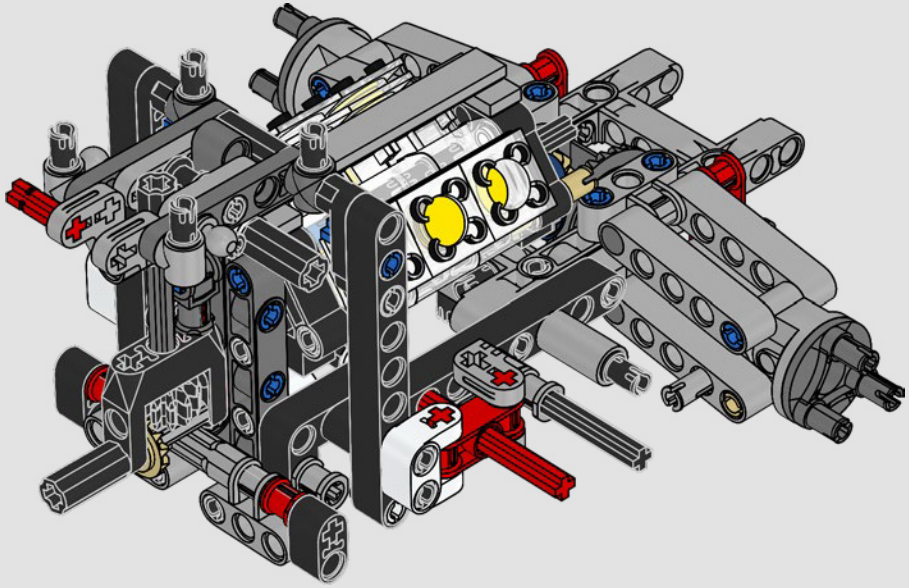

2x

60

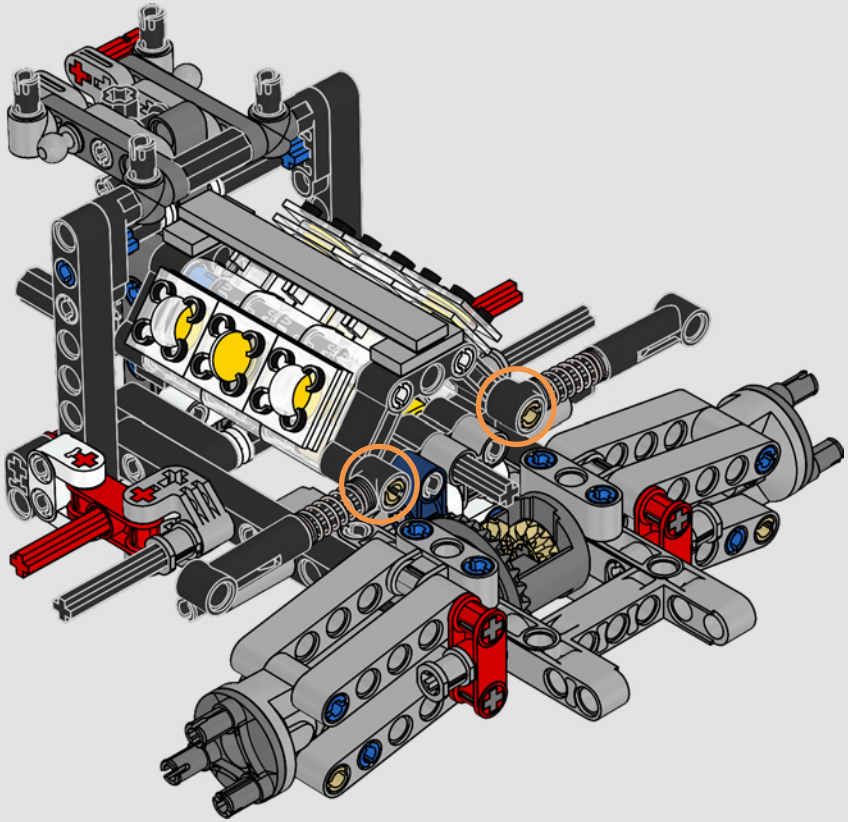

61

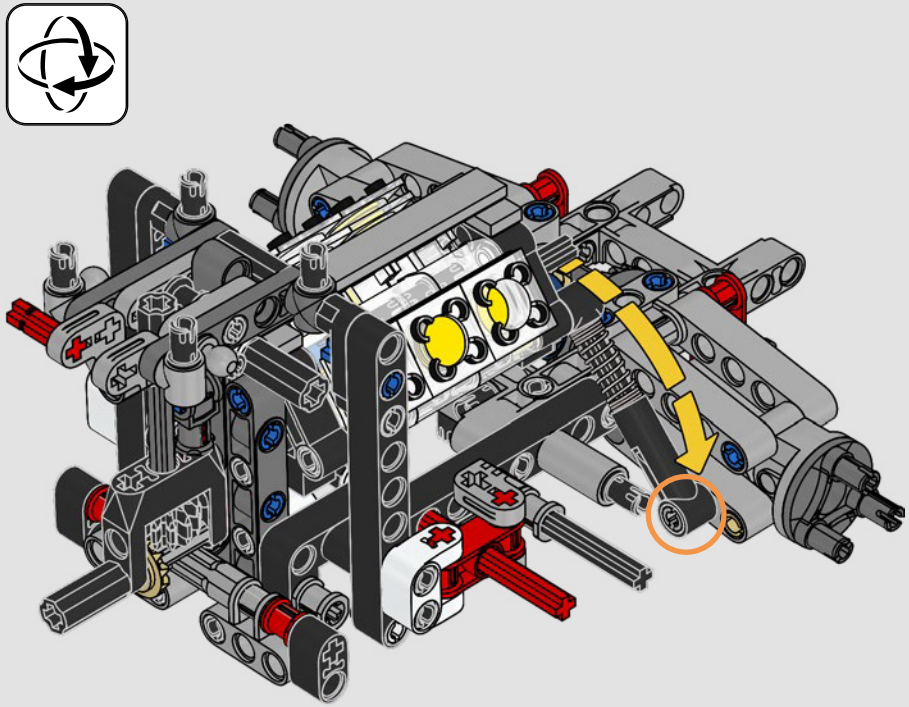

62

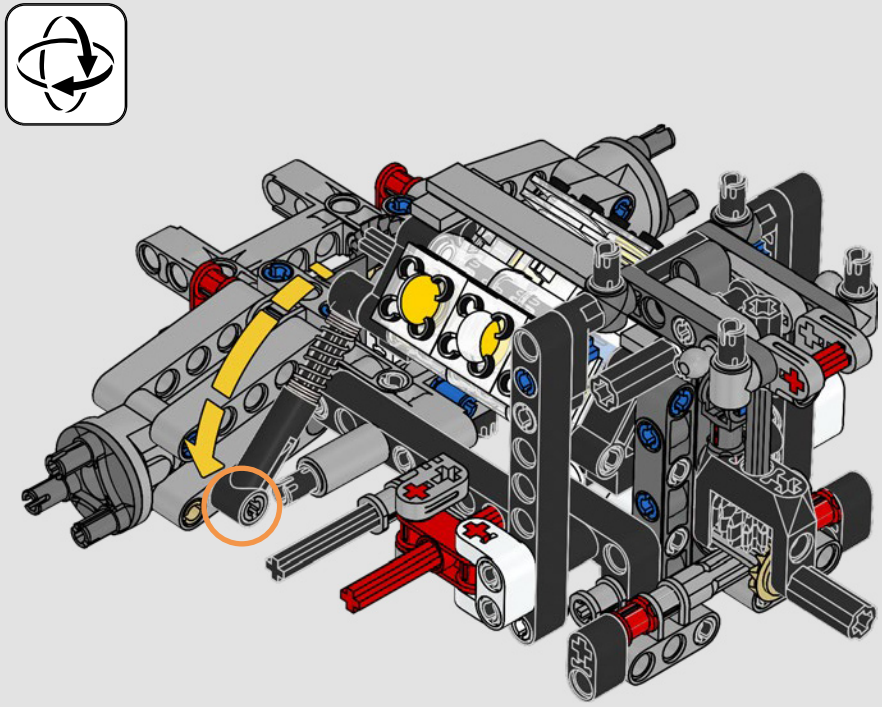

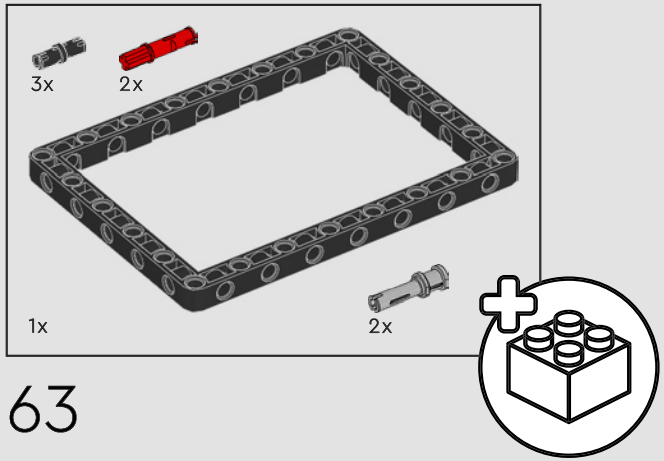

63

1

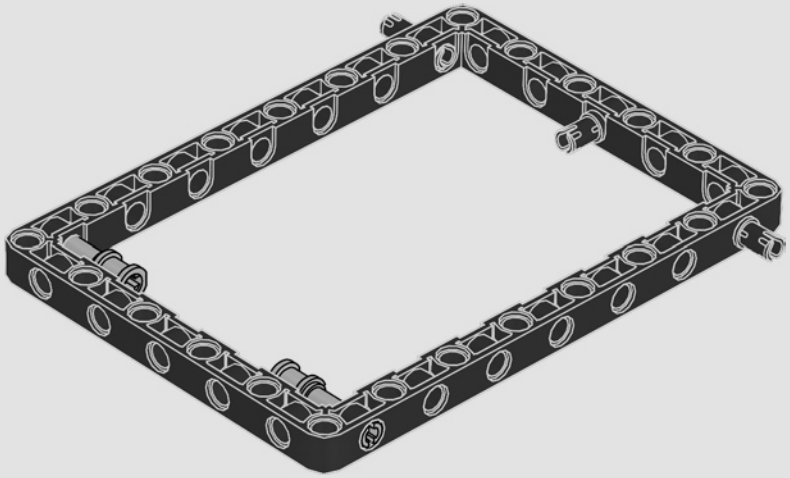

2

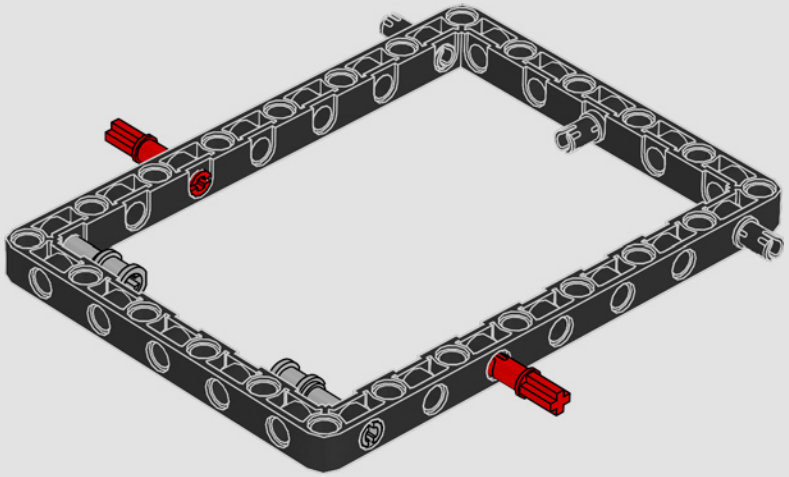

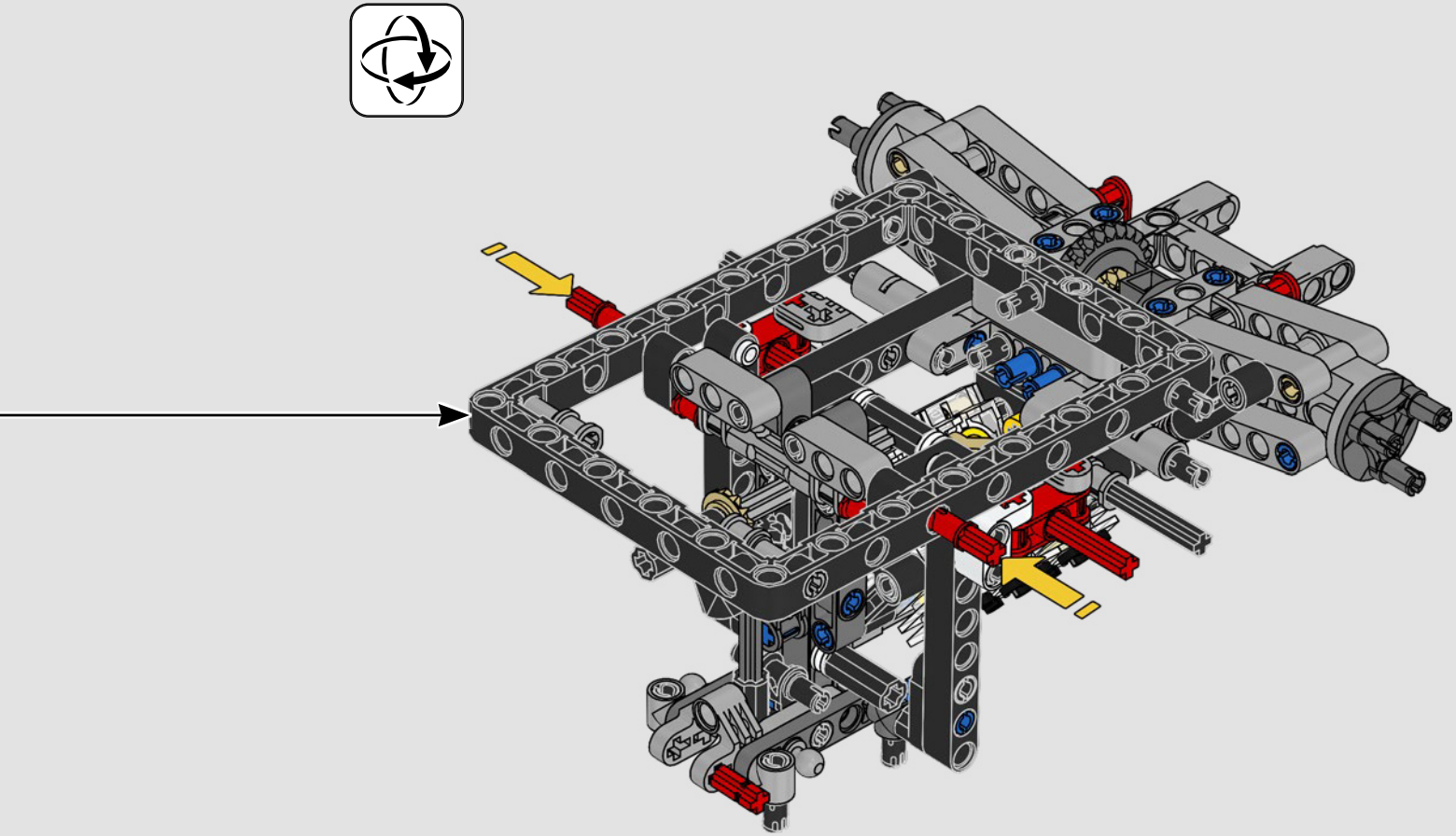

1x

64

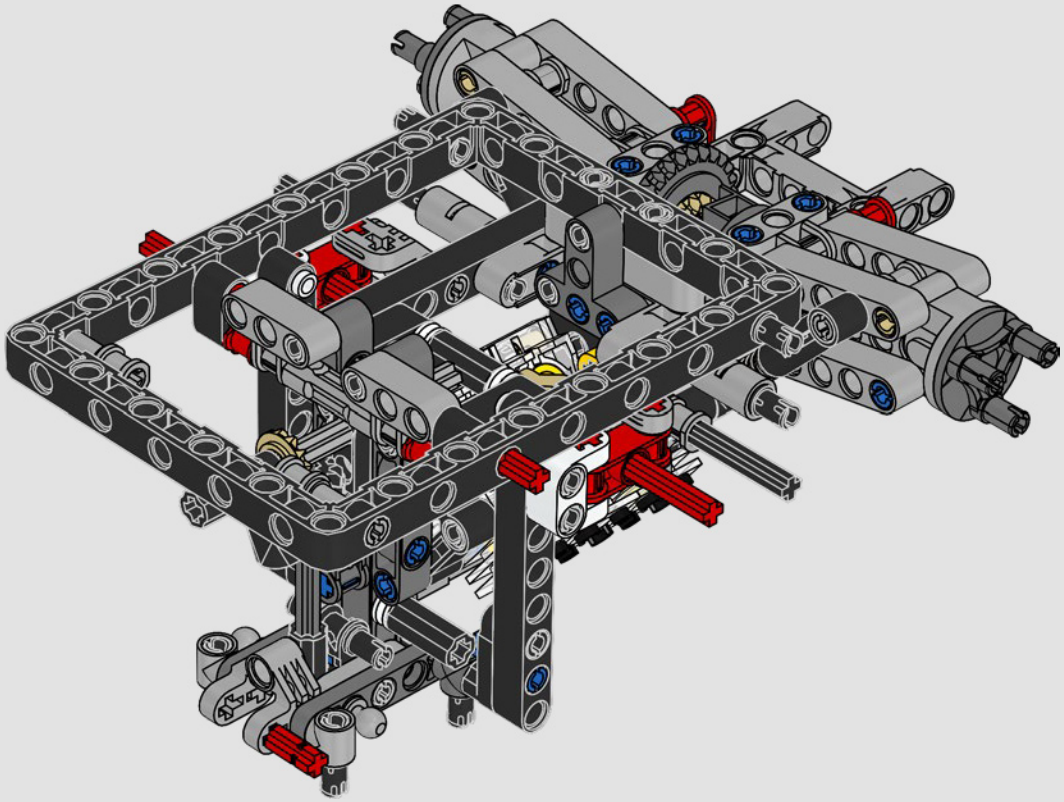

65

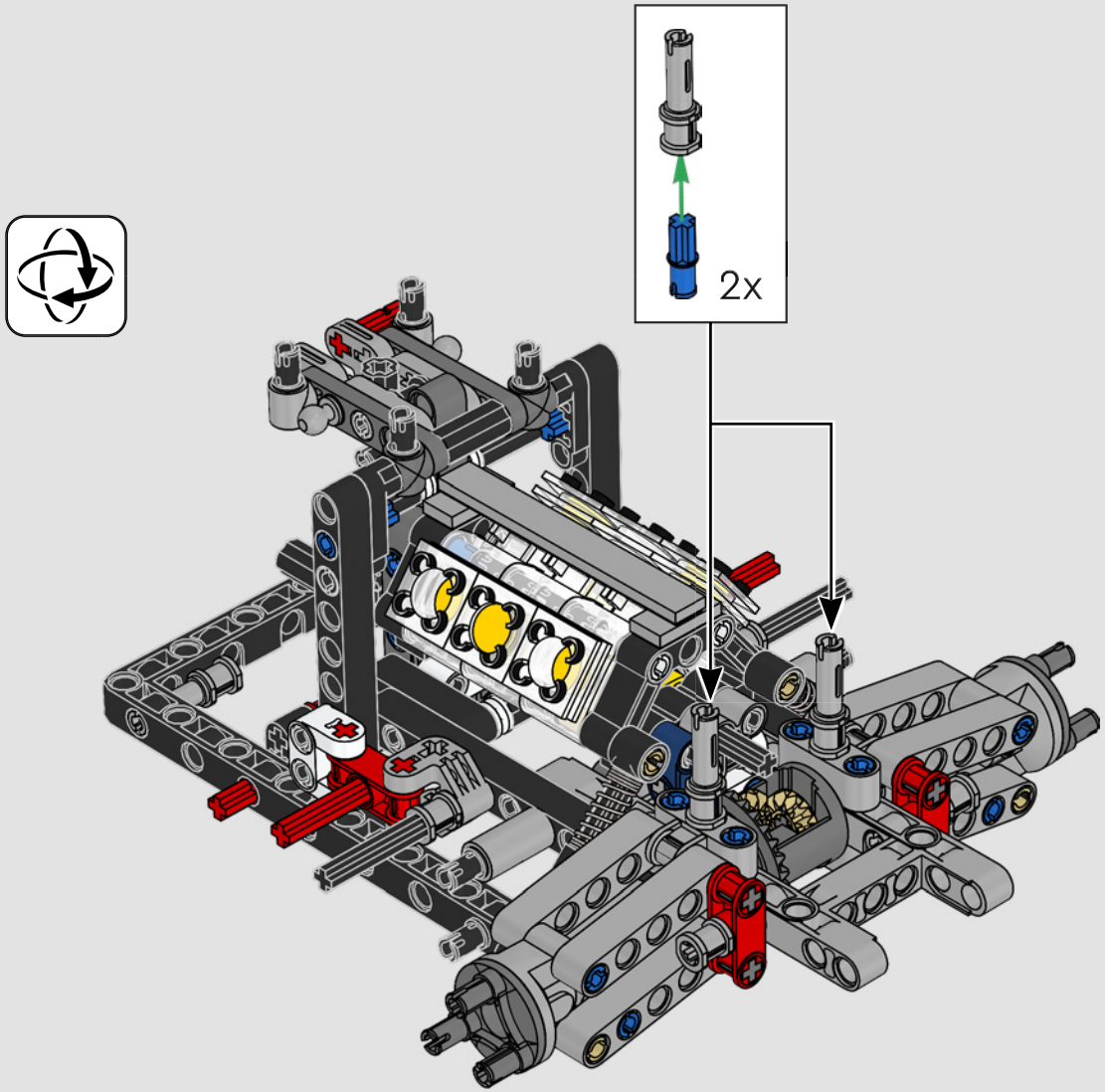

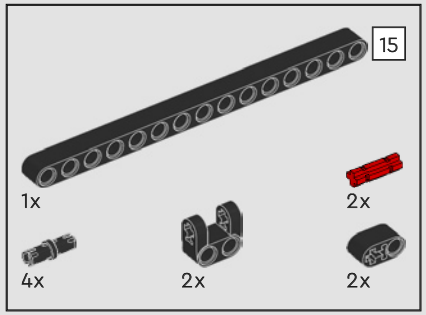

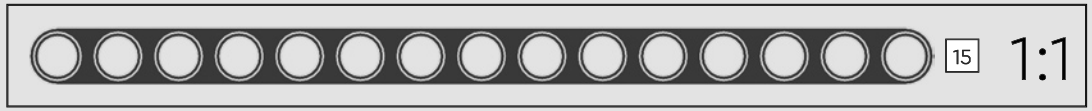

66

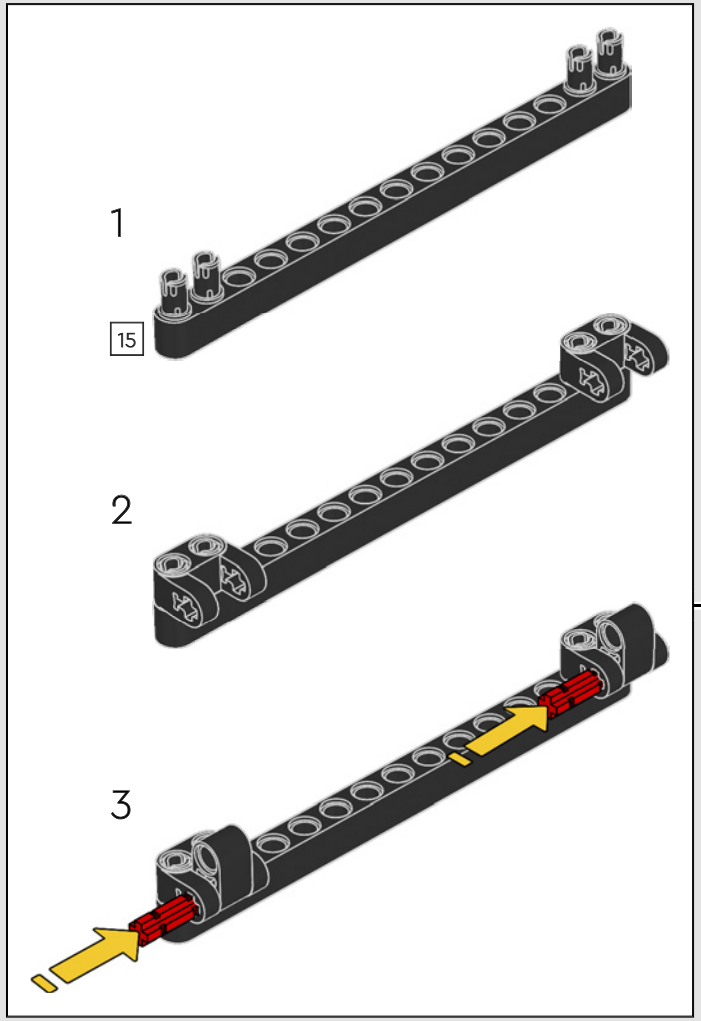

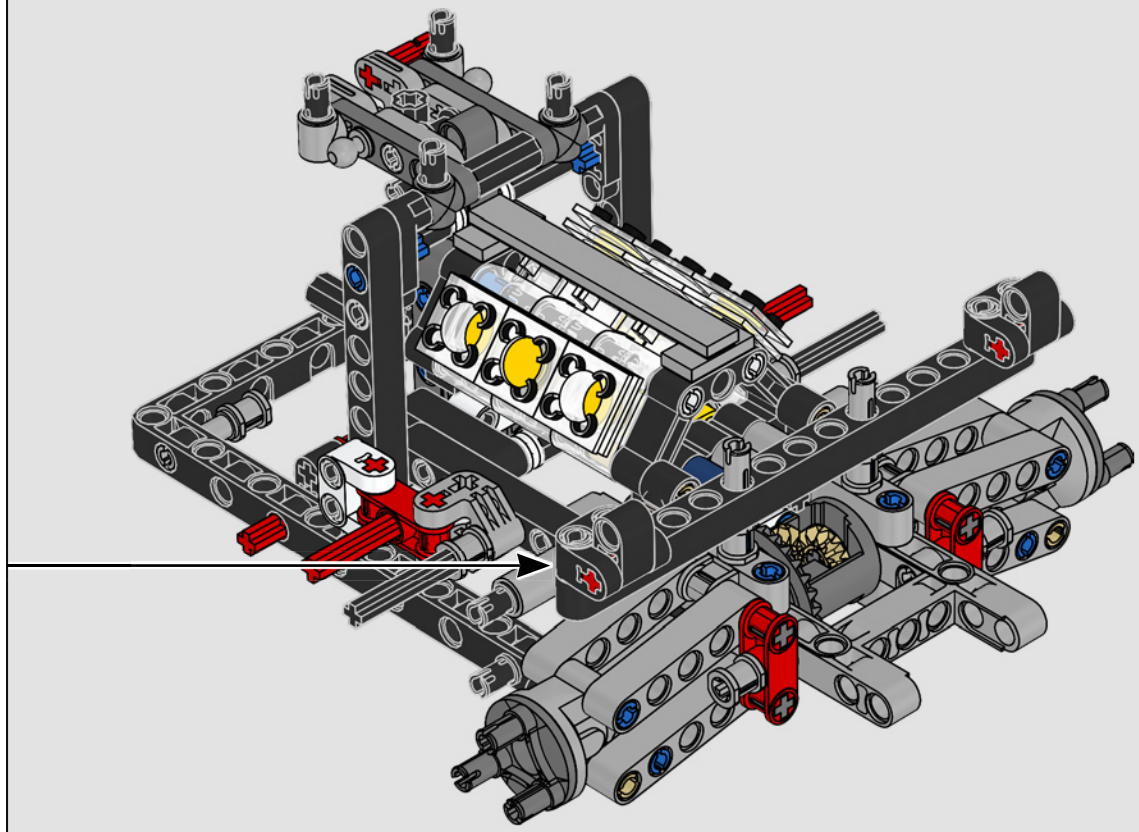

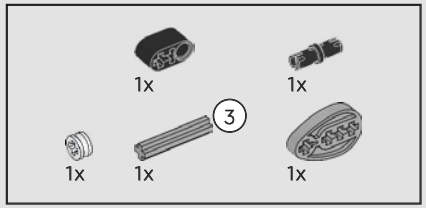

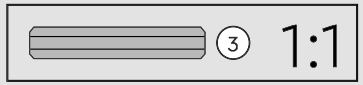

67

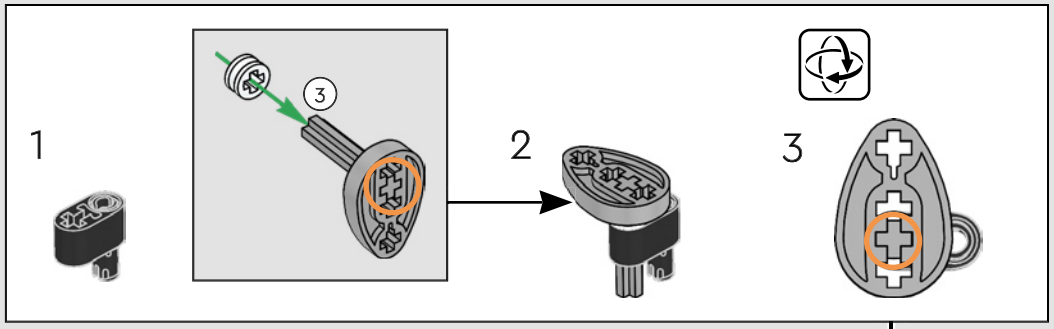

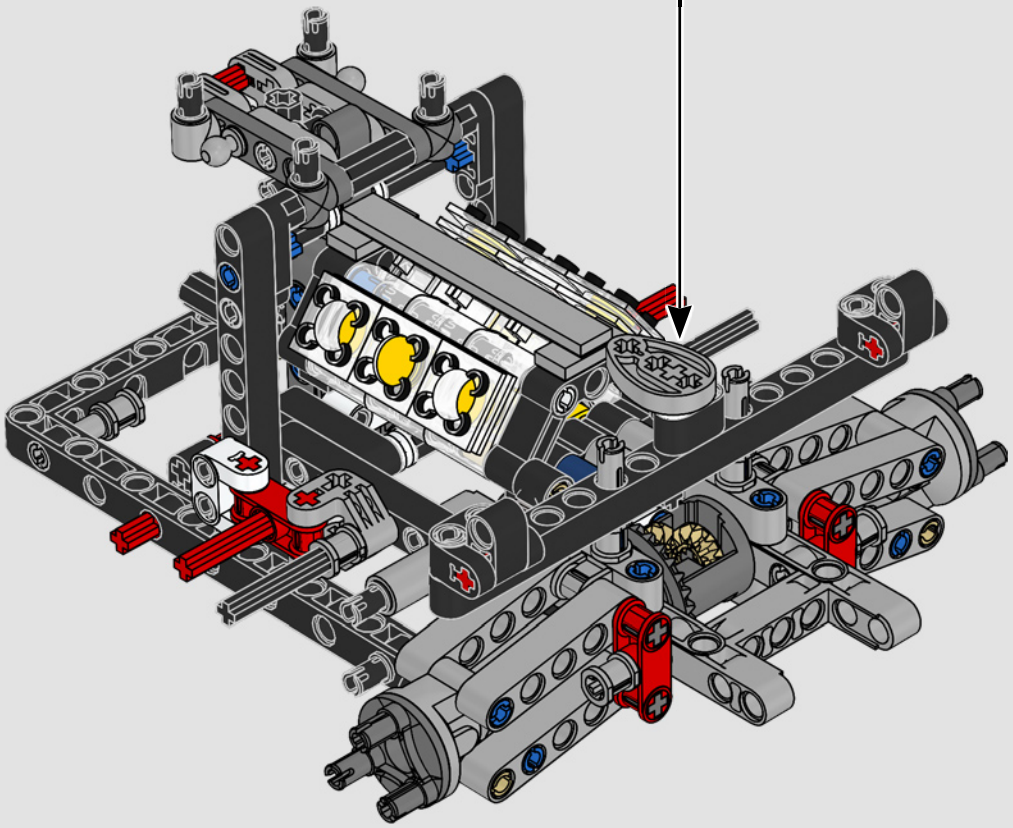

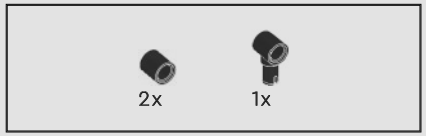

68

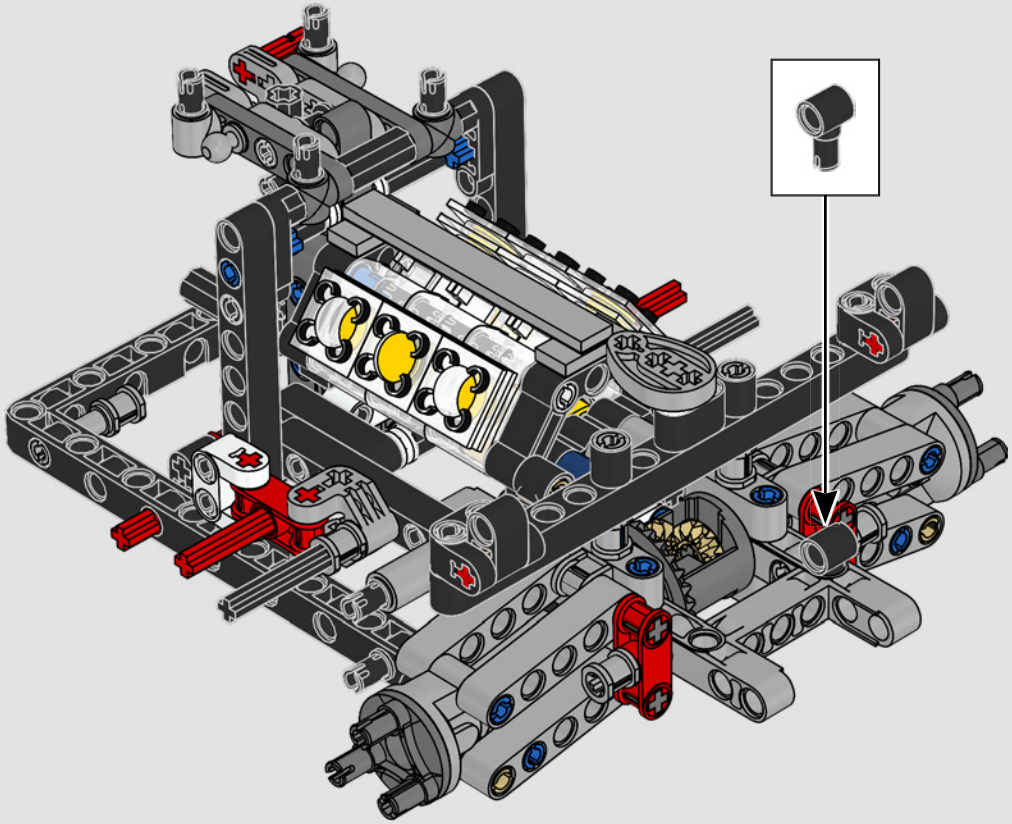

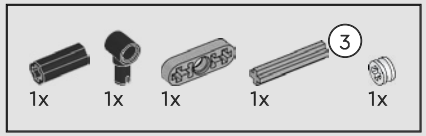

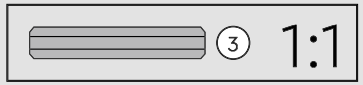

69

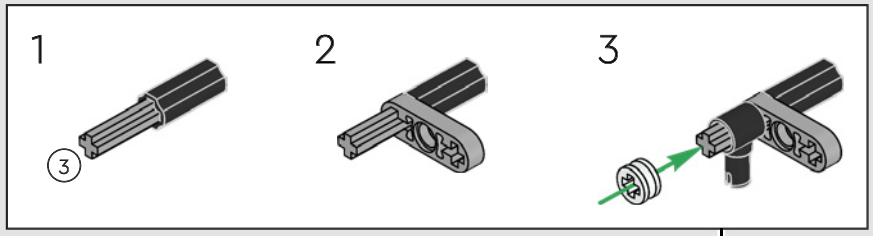

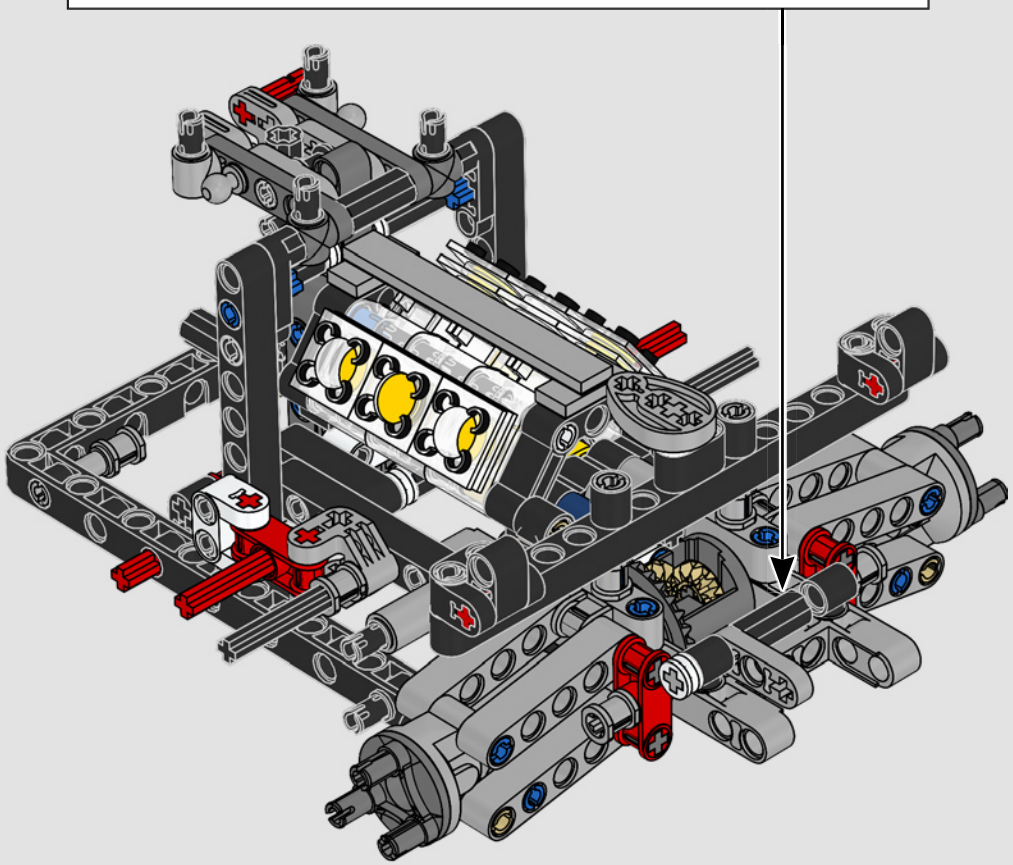

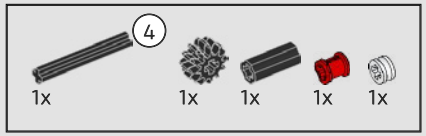

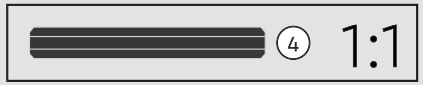

70

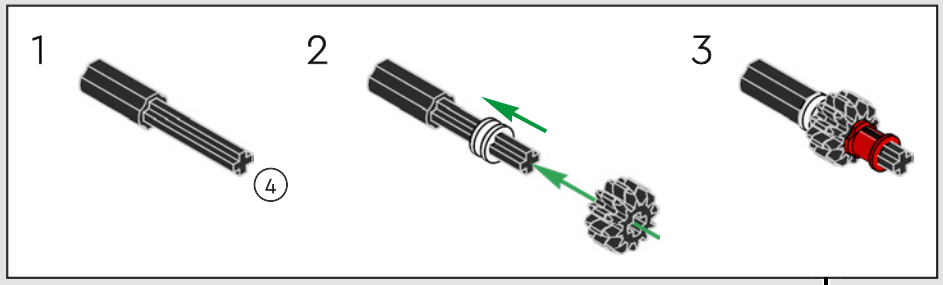

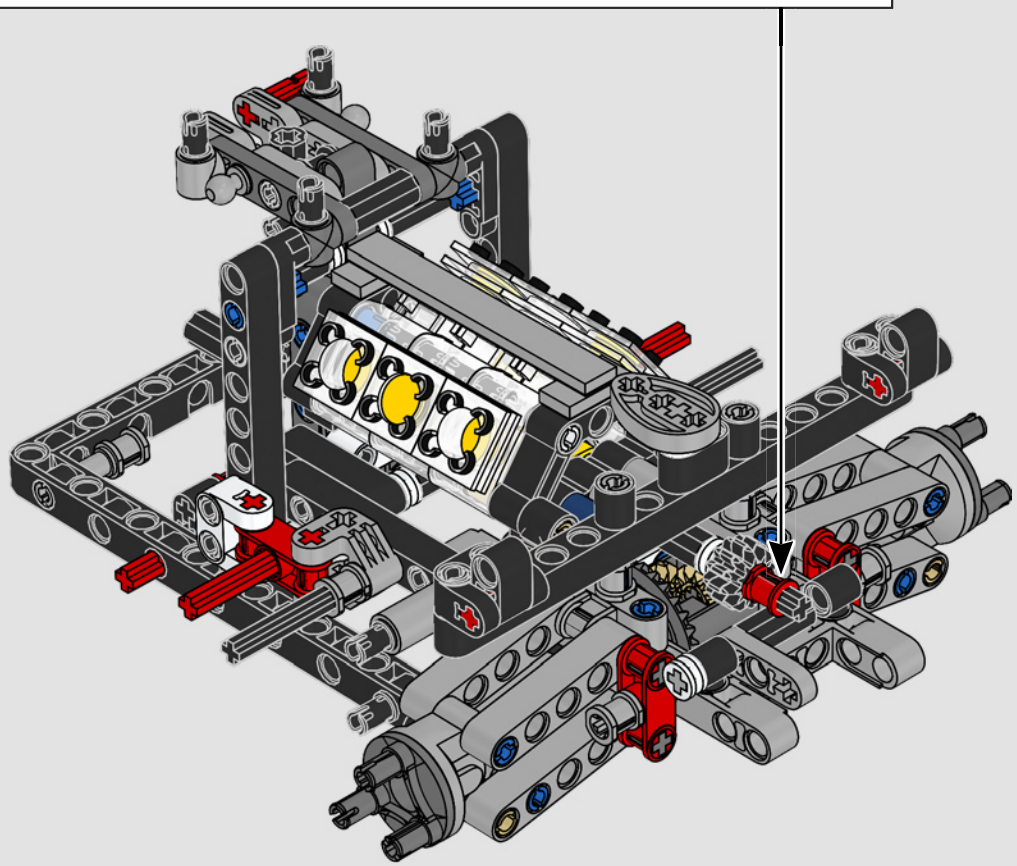

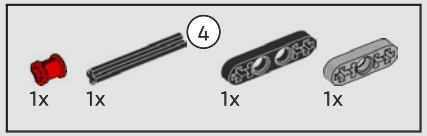

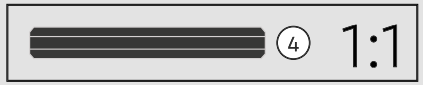

71

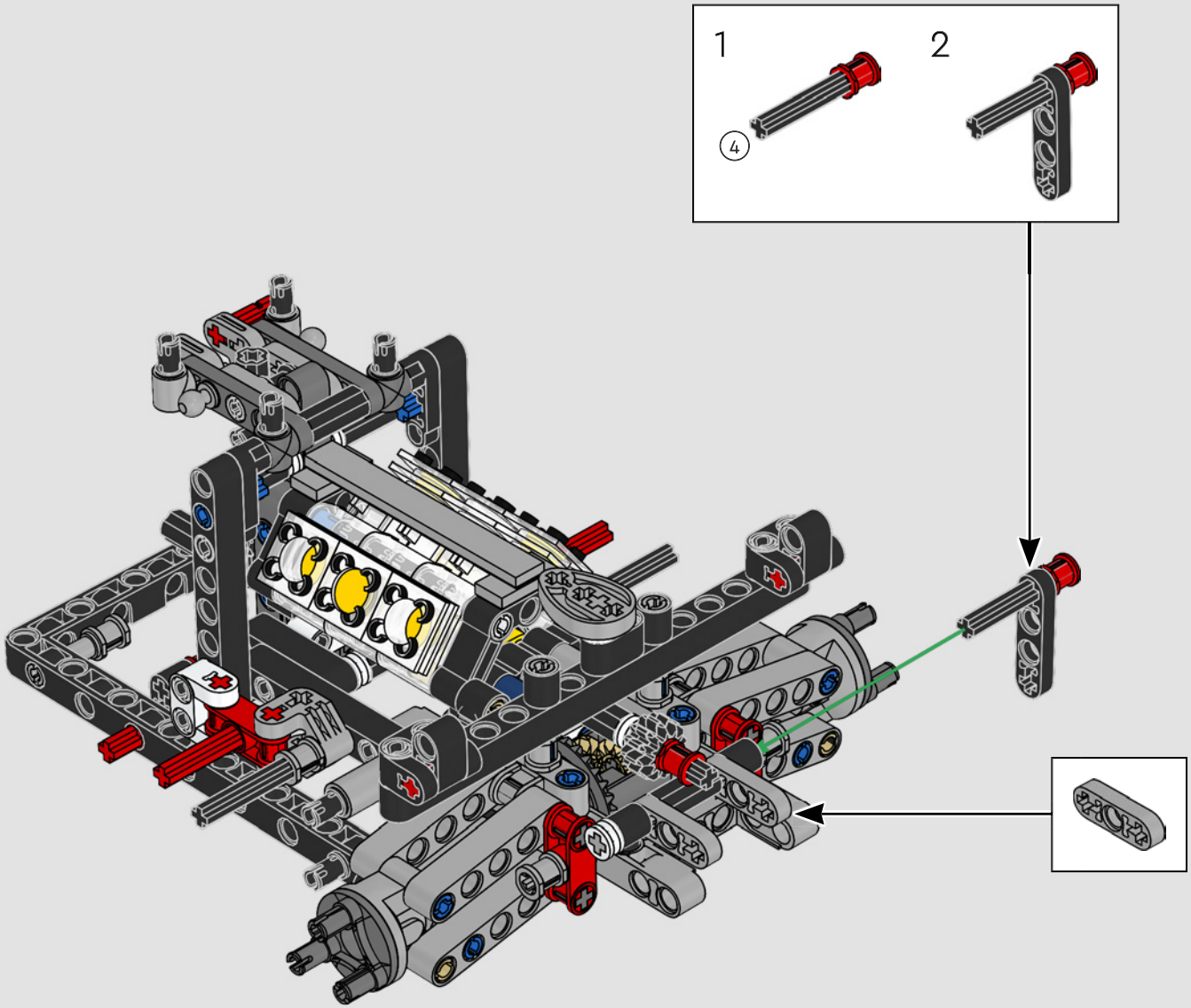

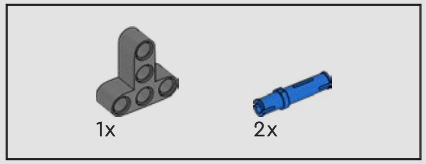

72

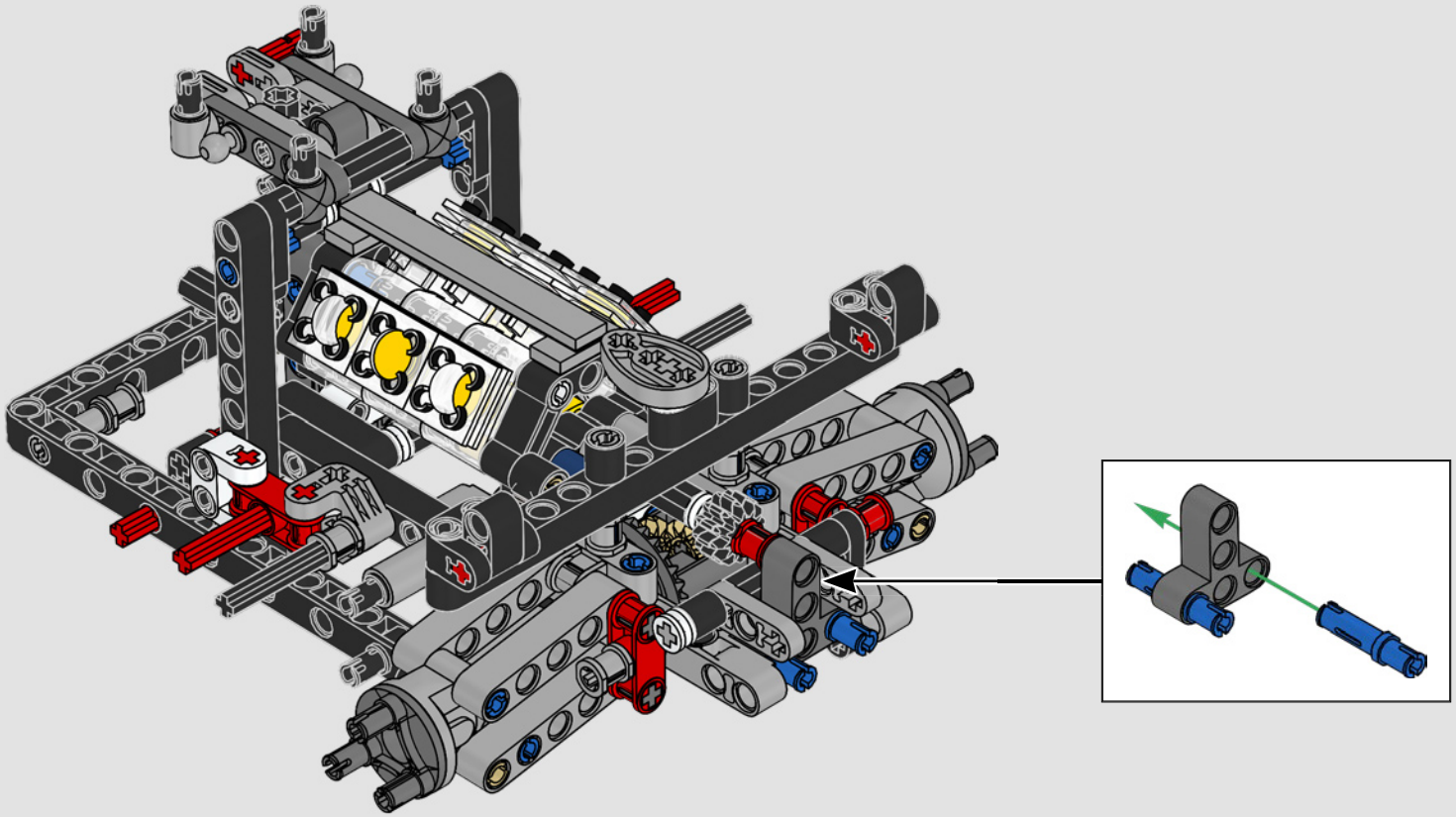

1:1

73

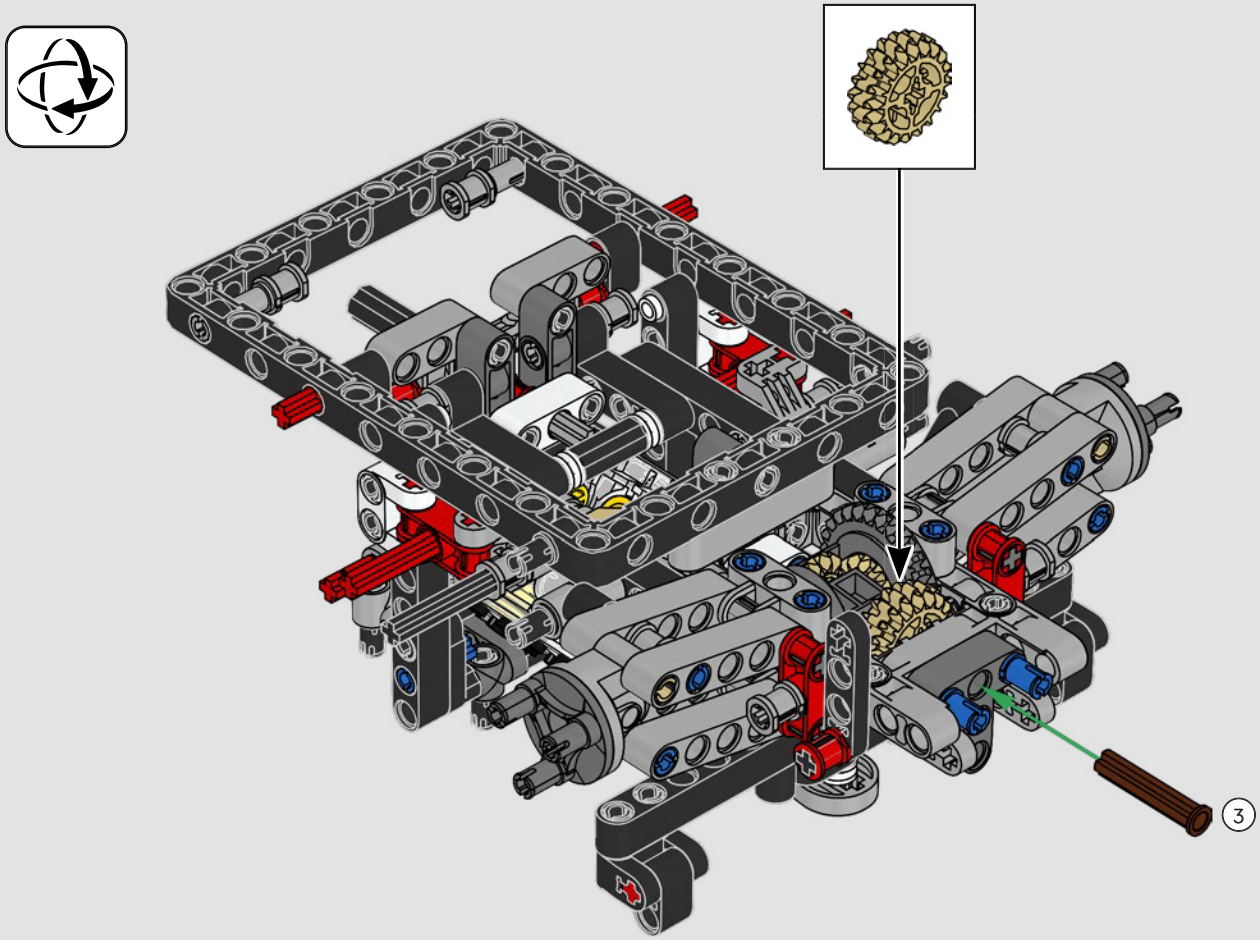

74

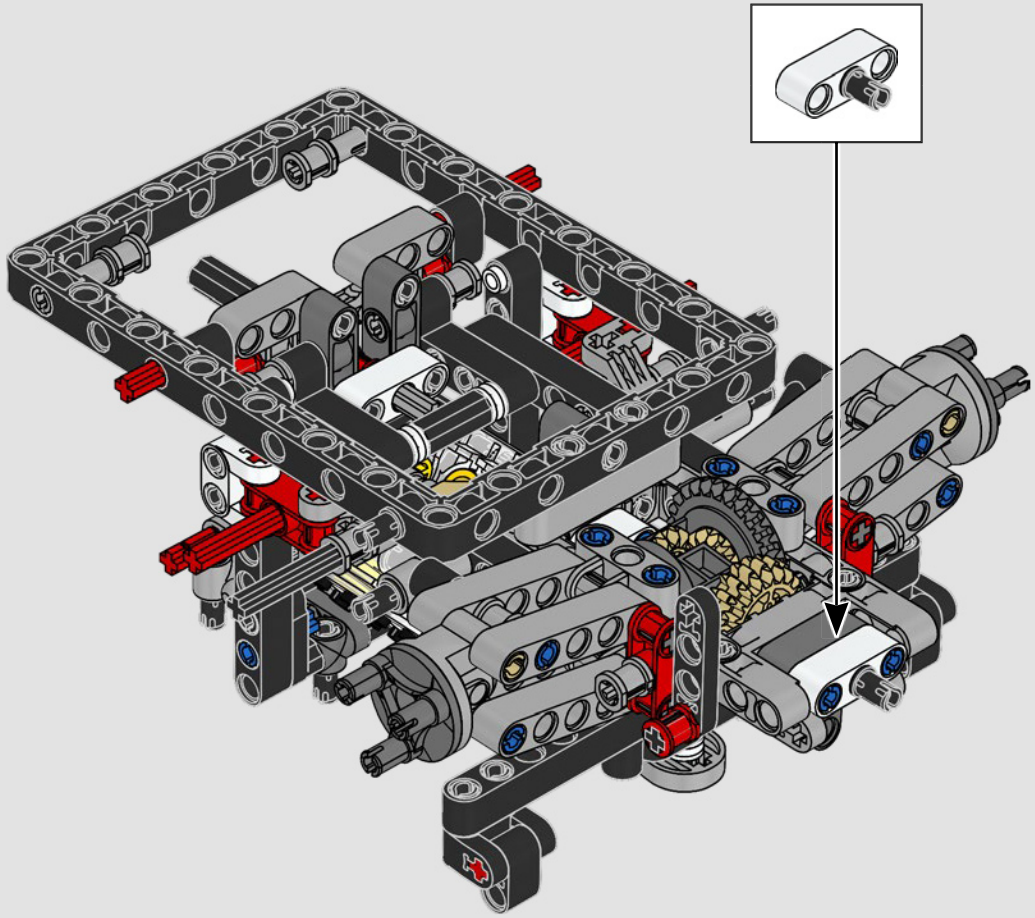

75

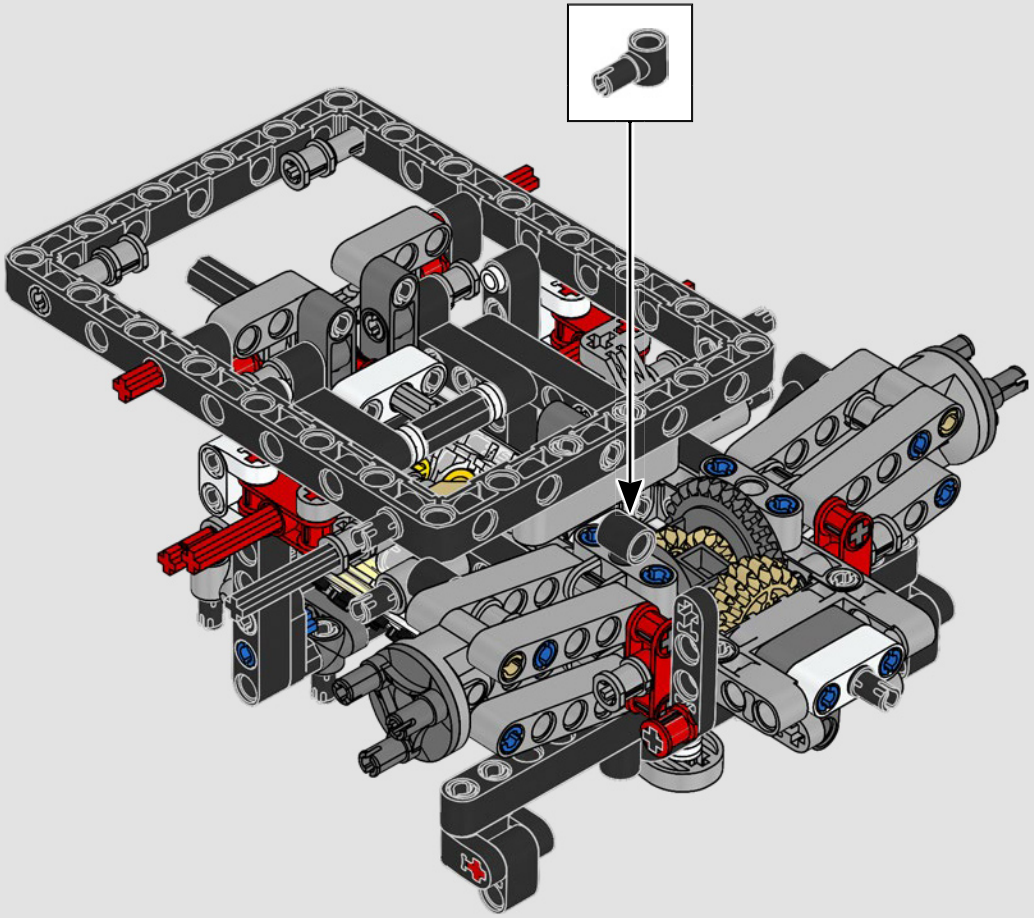

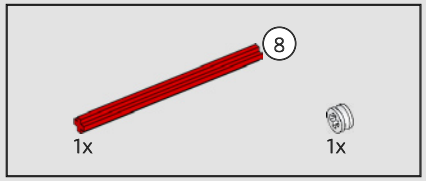

76

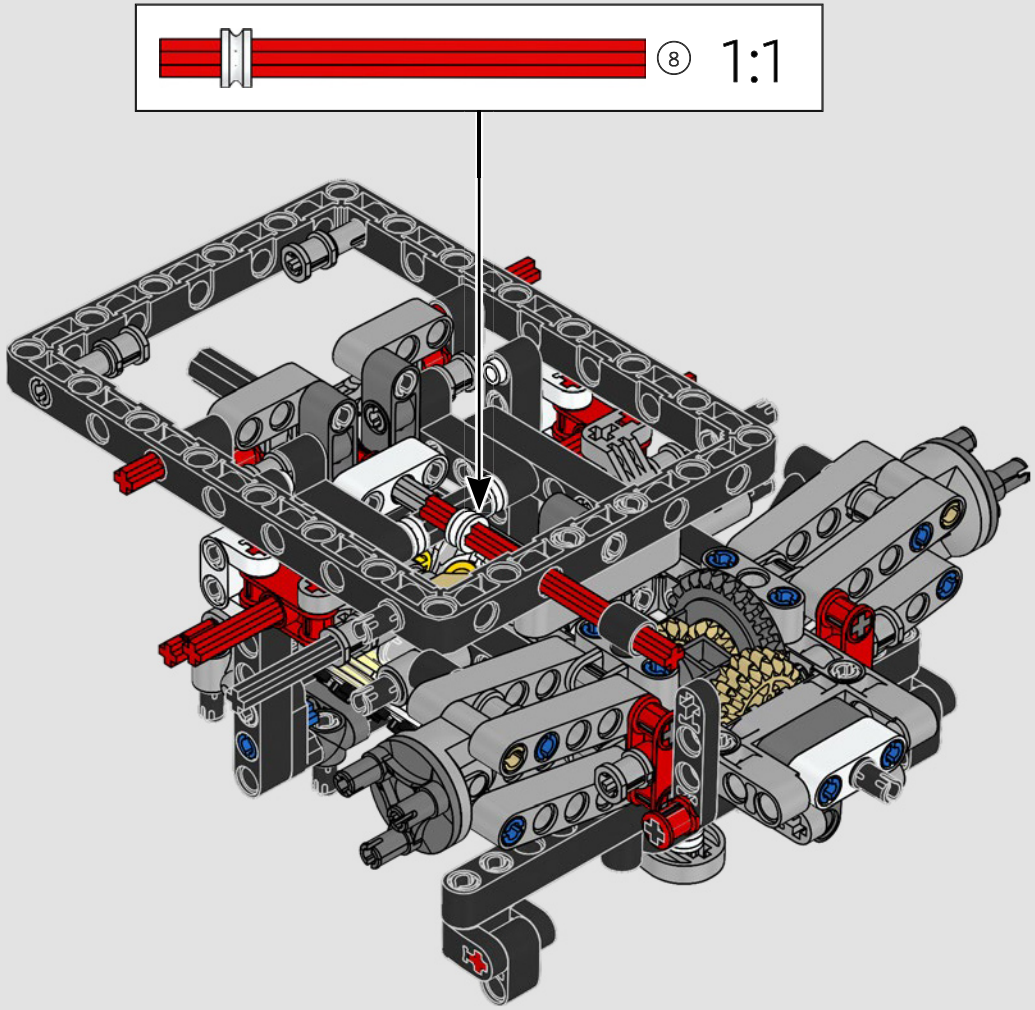

77

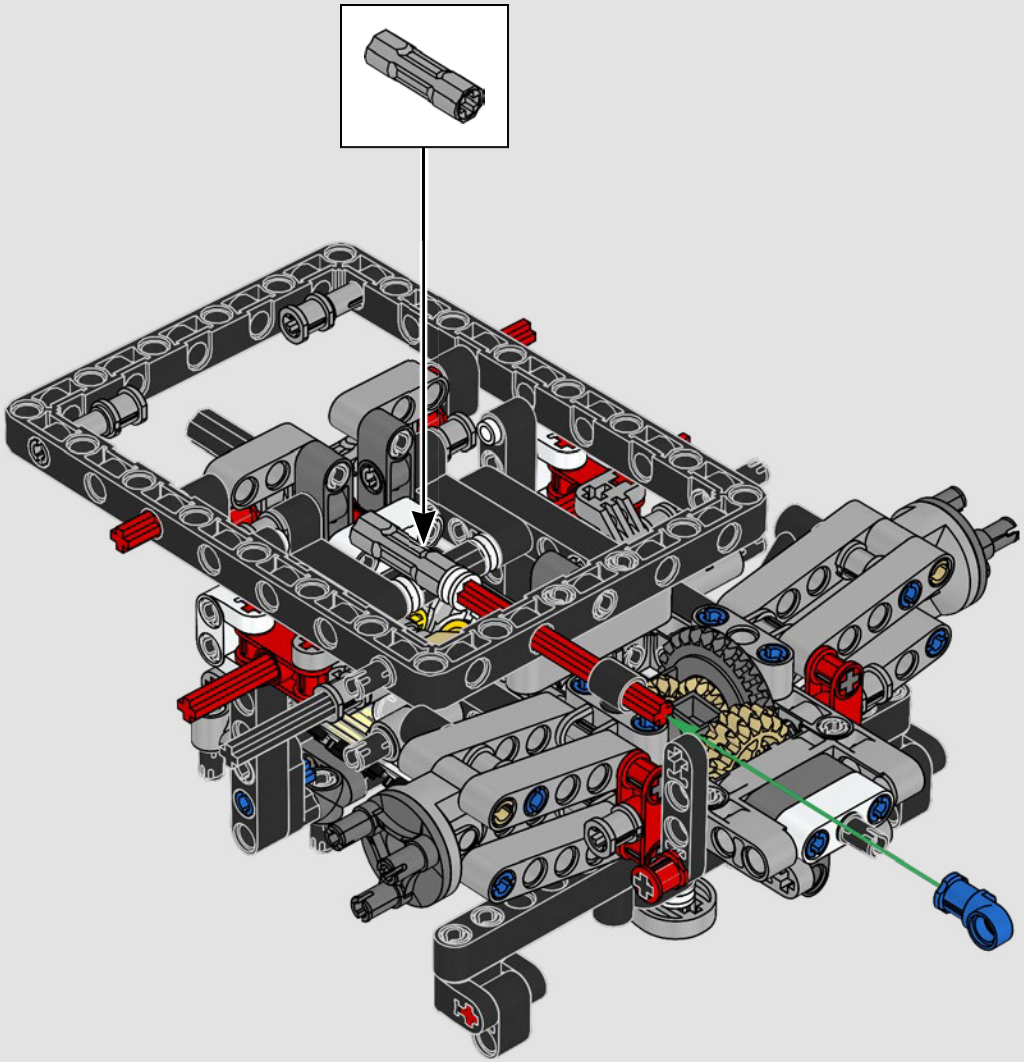

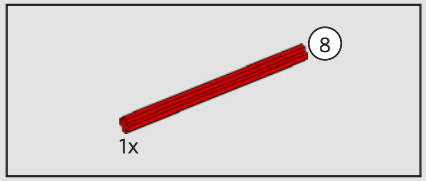

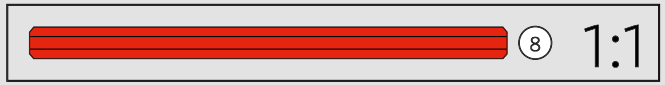

78

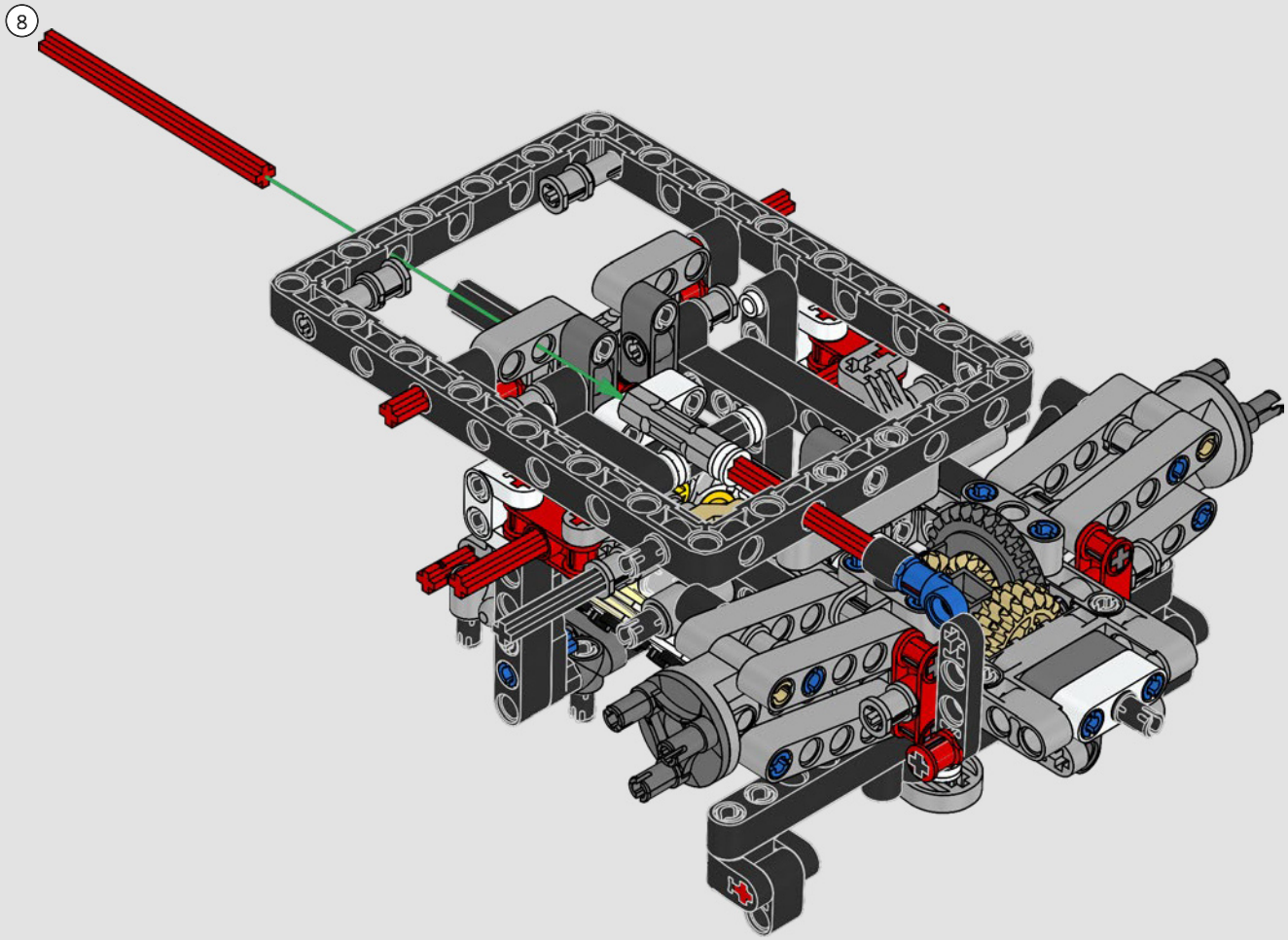

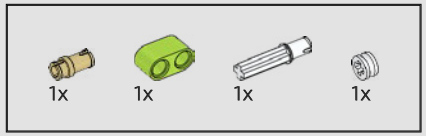

79

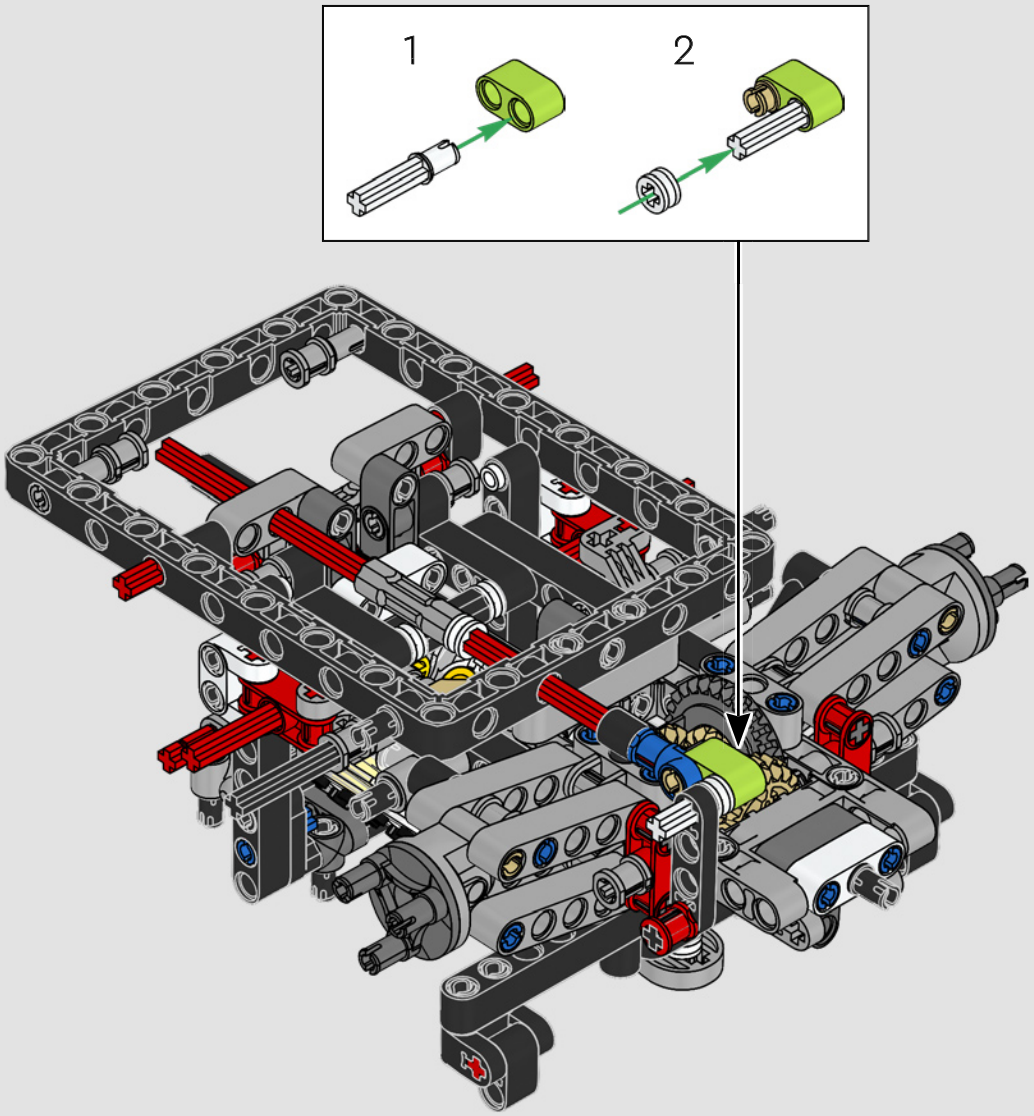

80

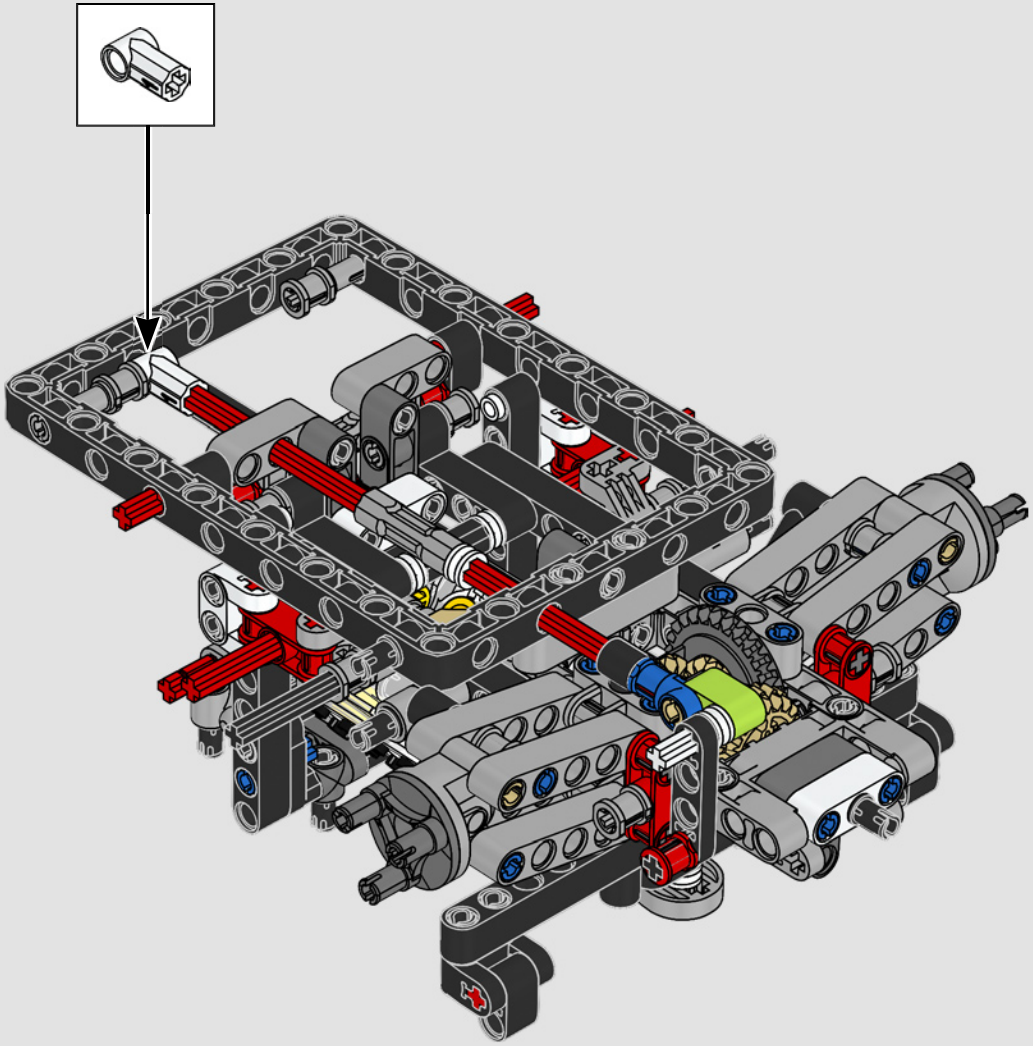

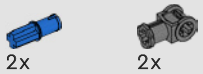

81

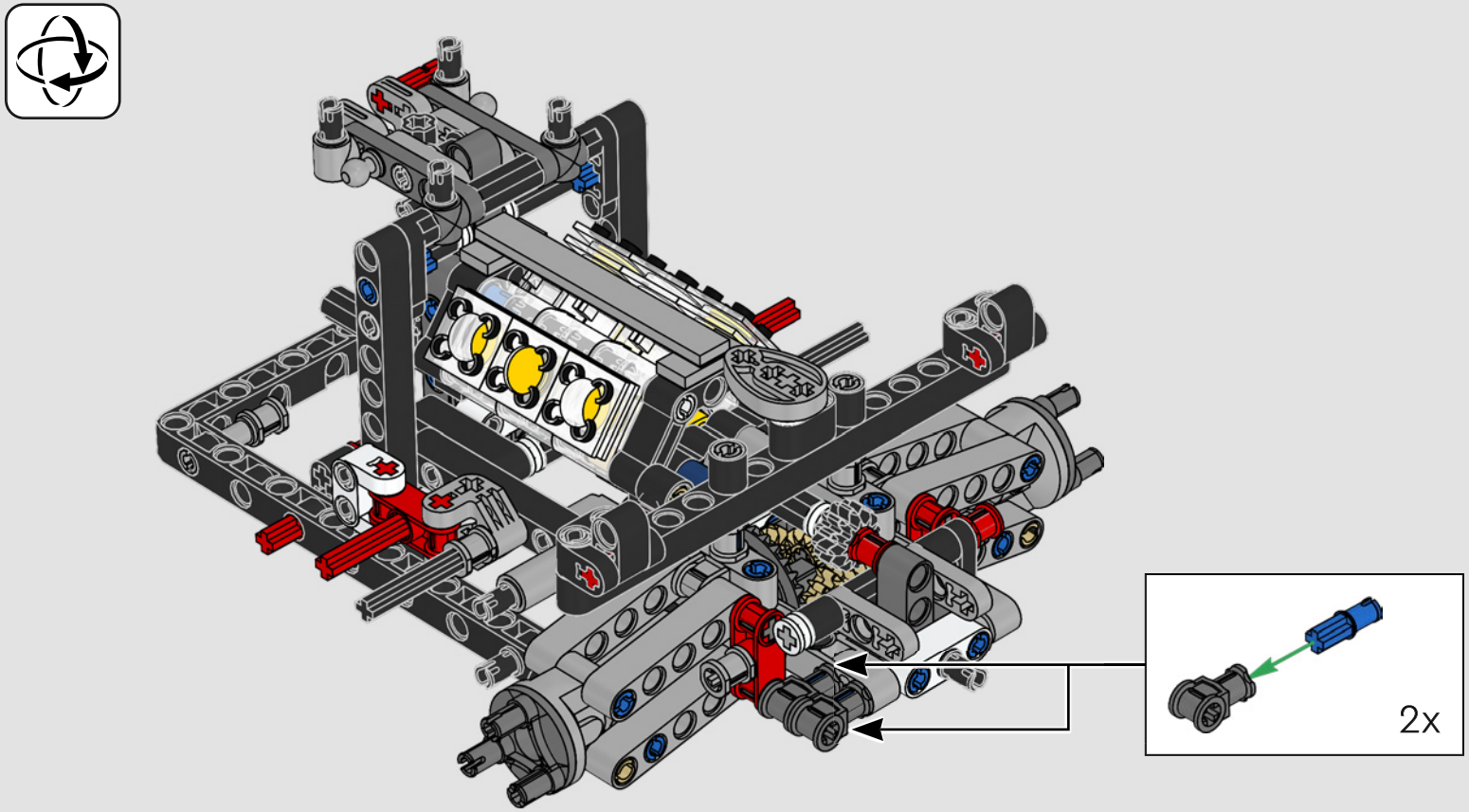

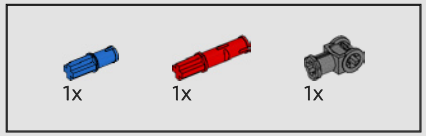

82

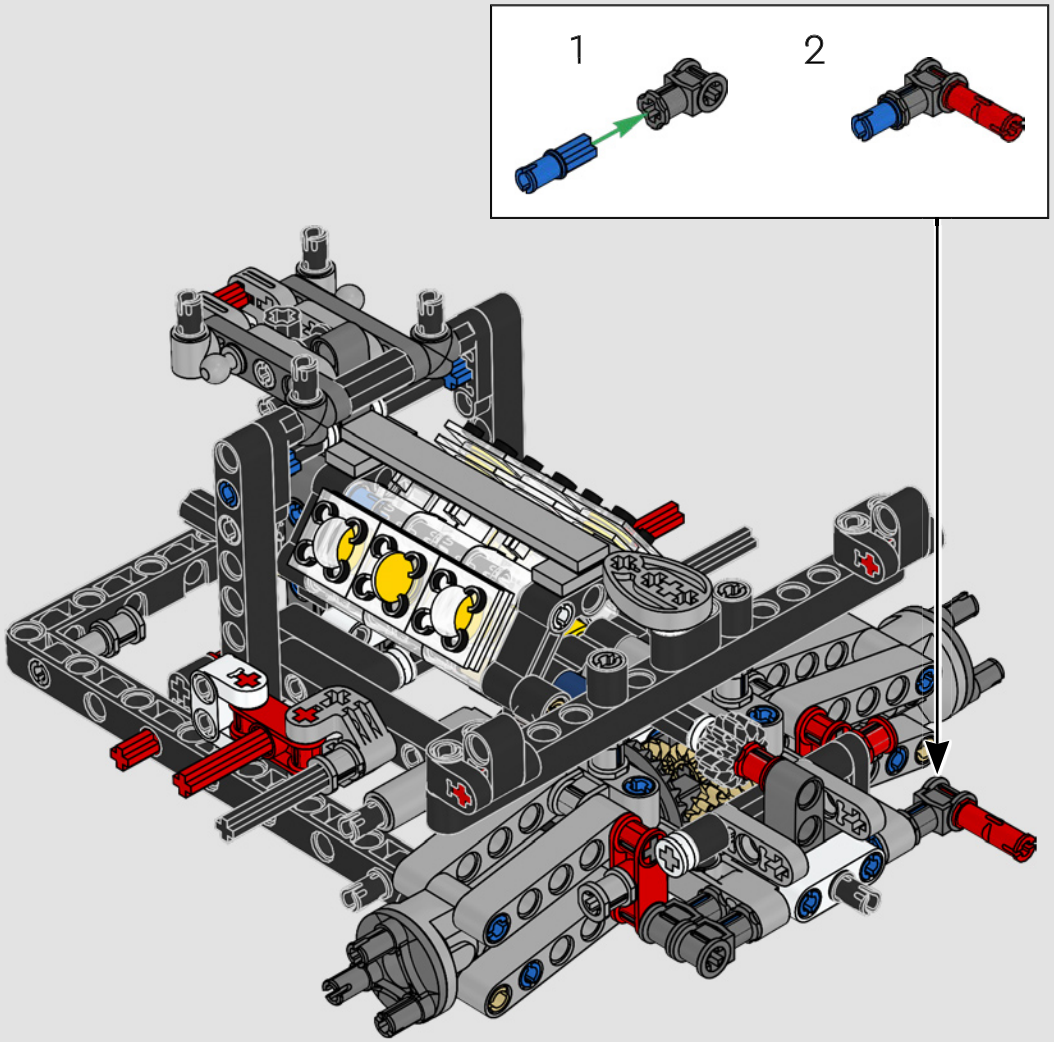

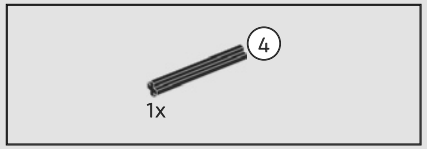

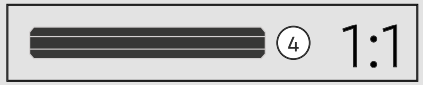

83

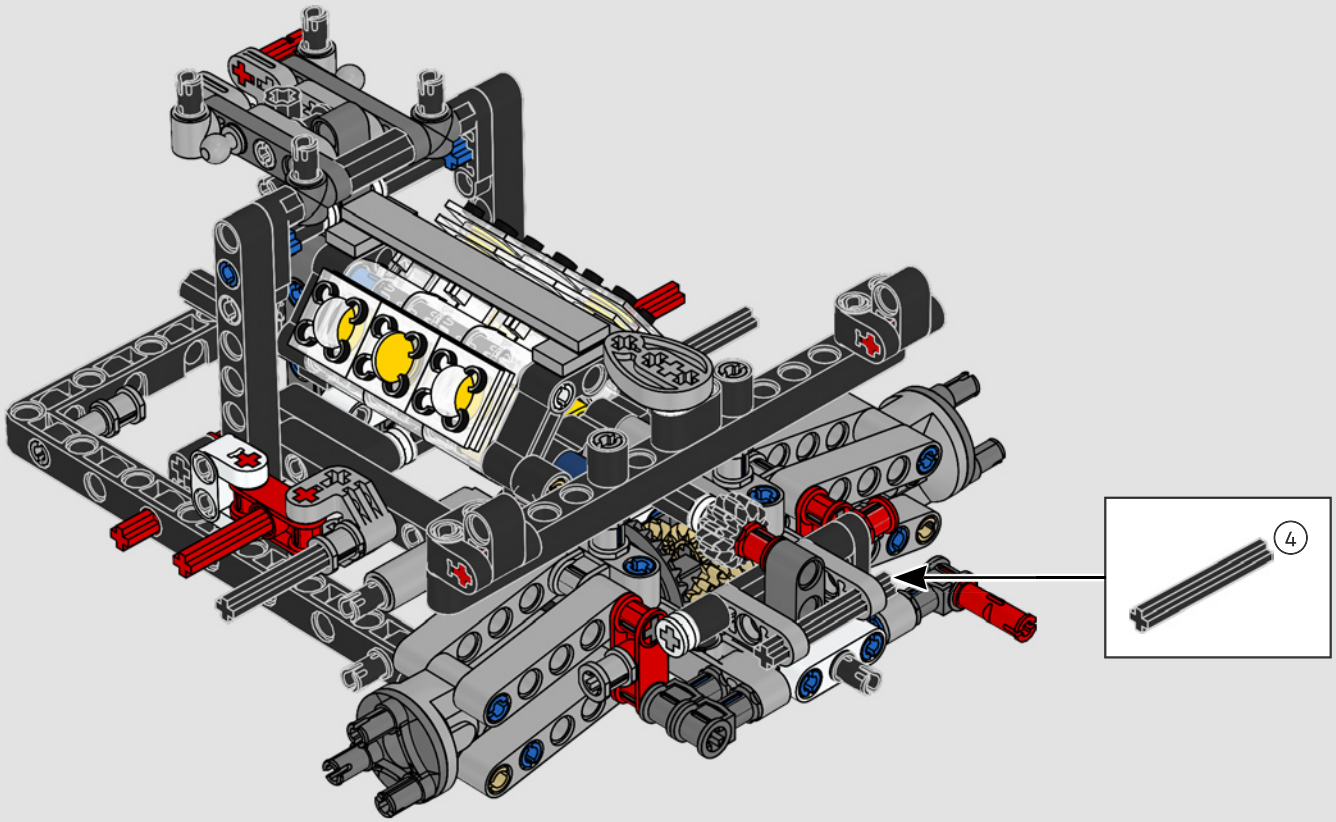

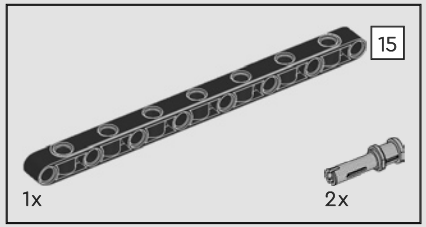

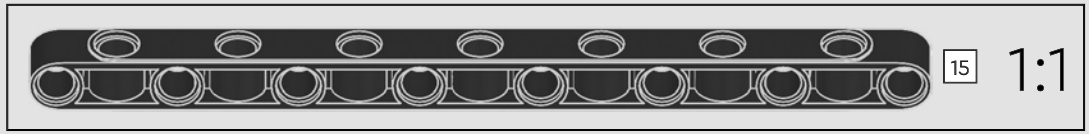

84

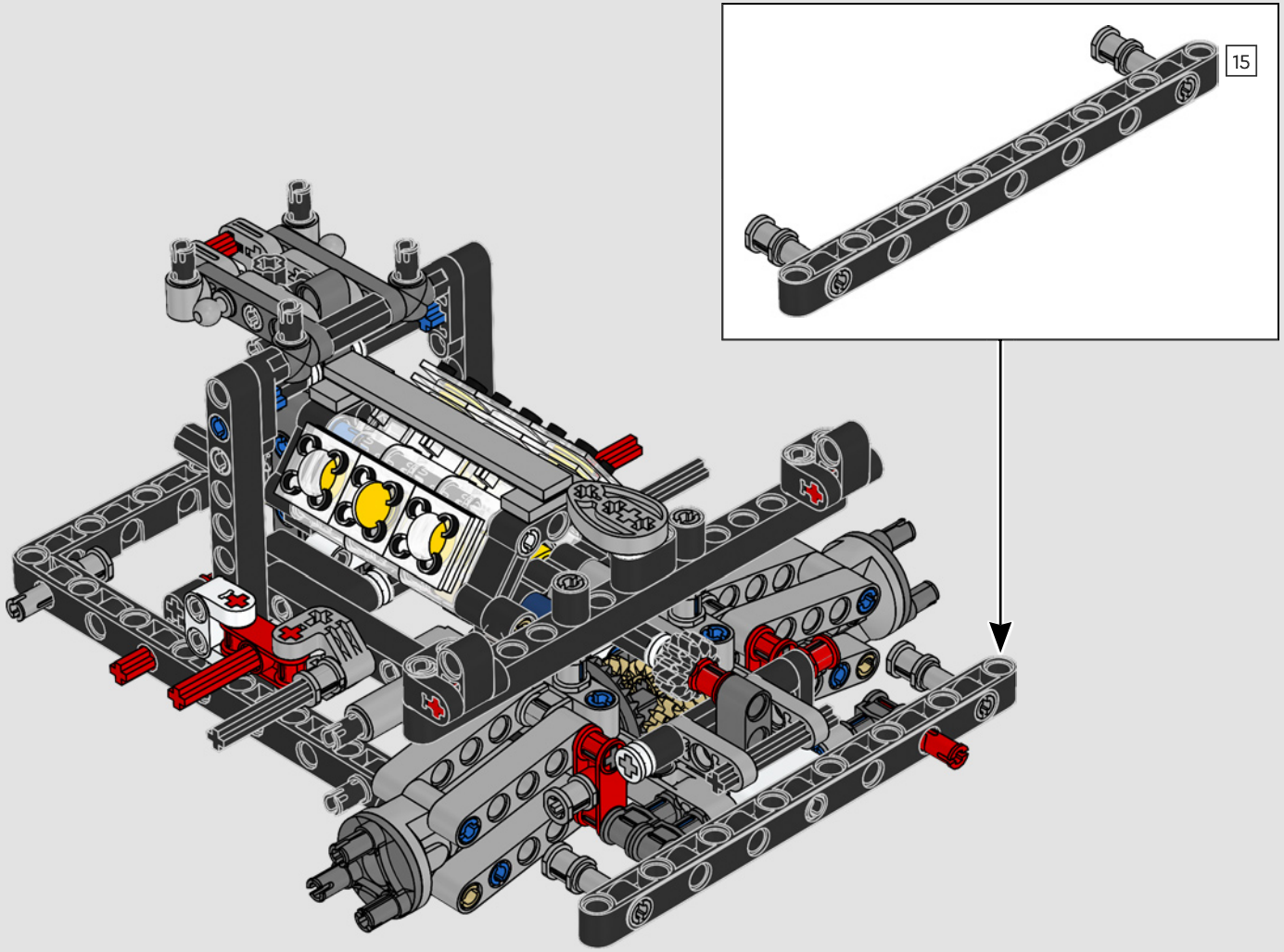

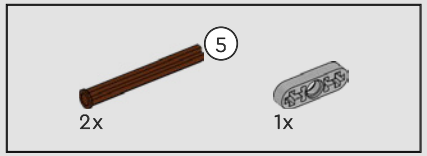

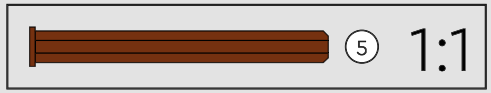

85

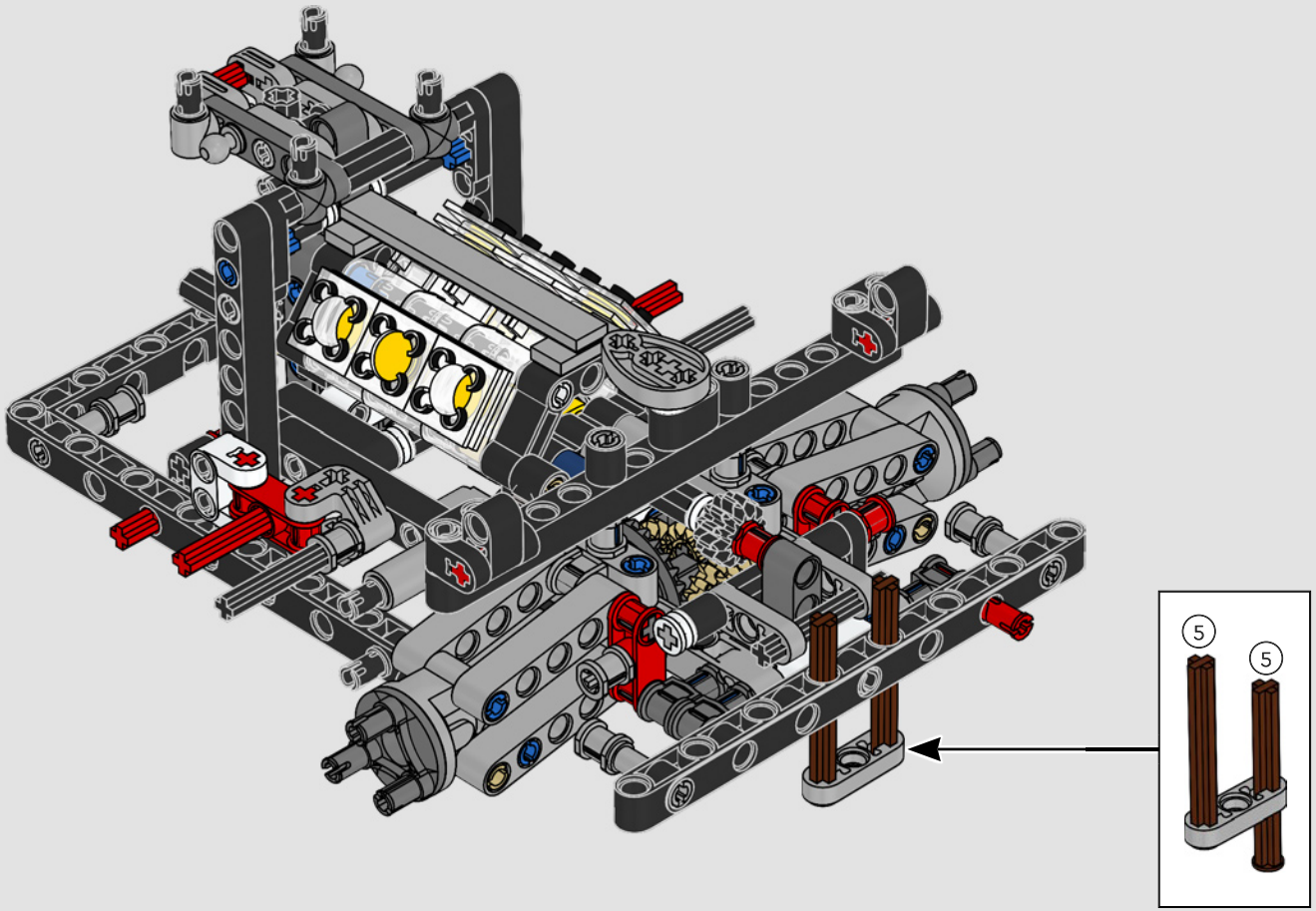

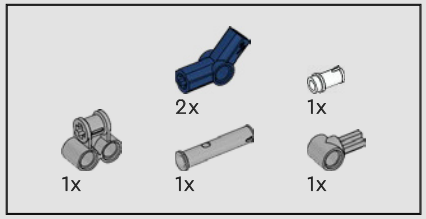

86

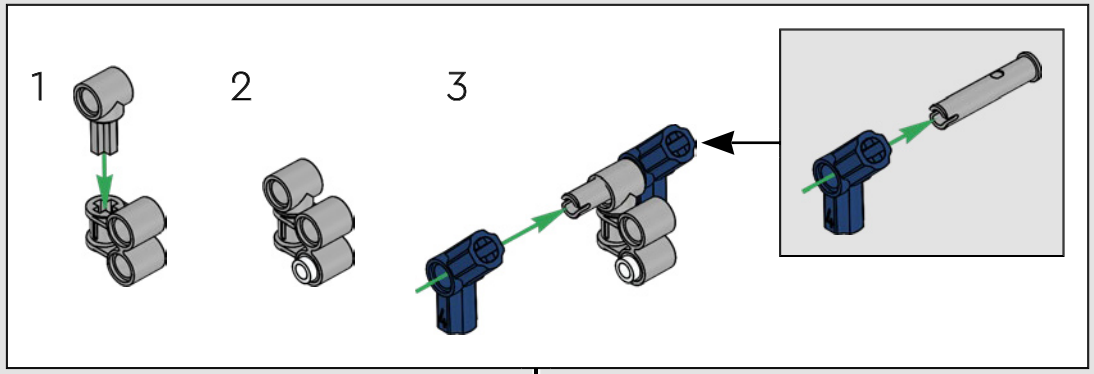

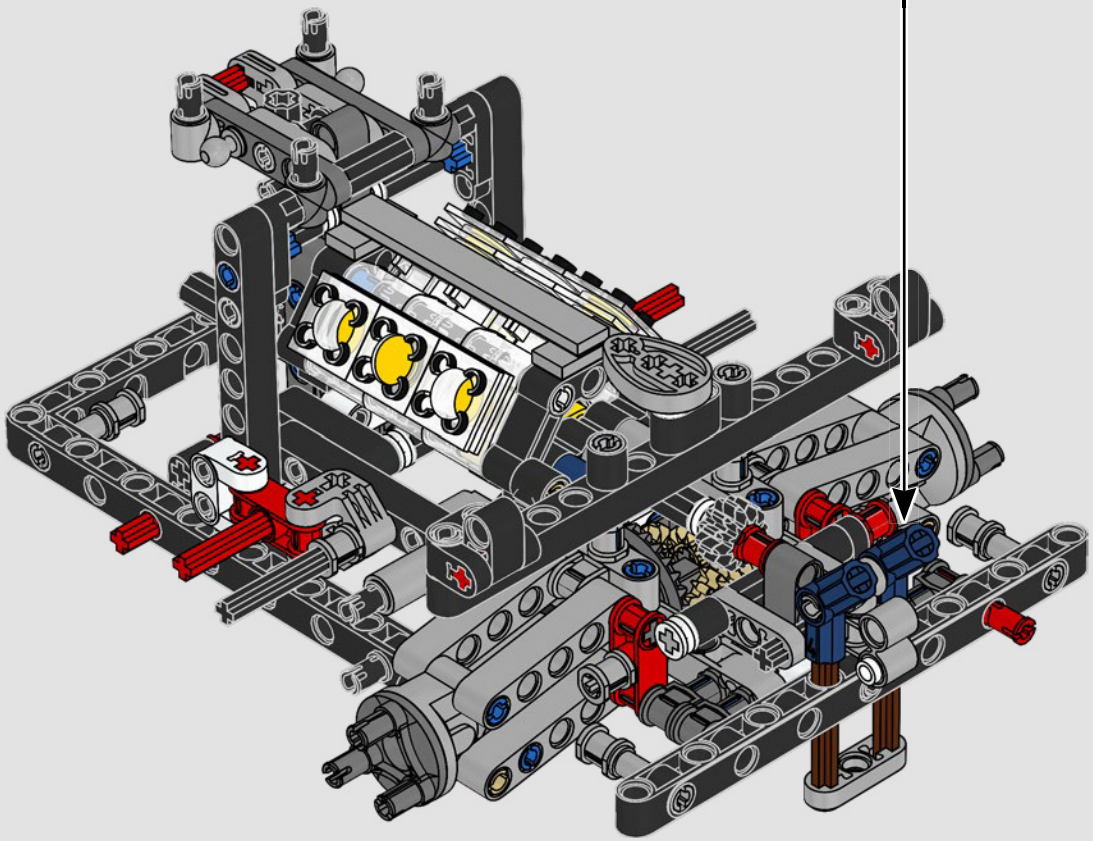

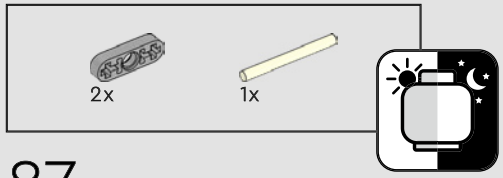

87

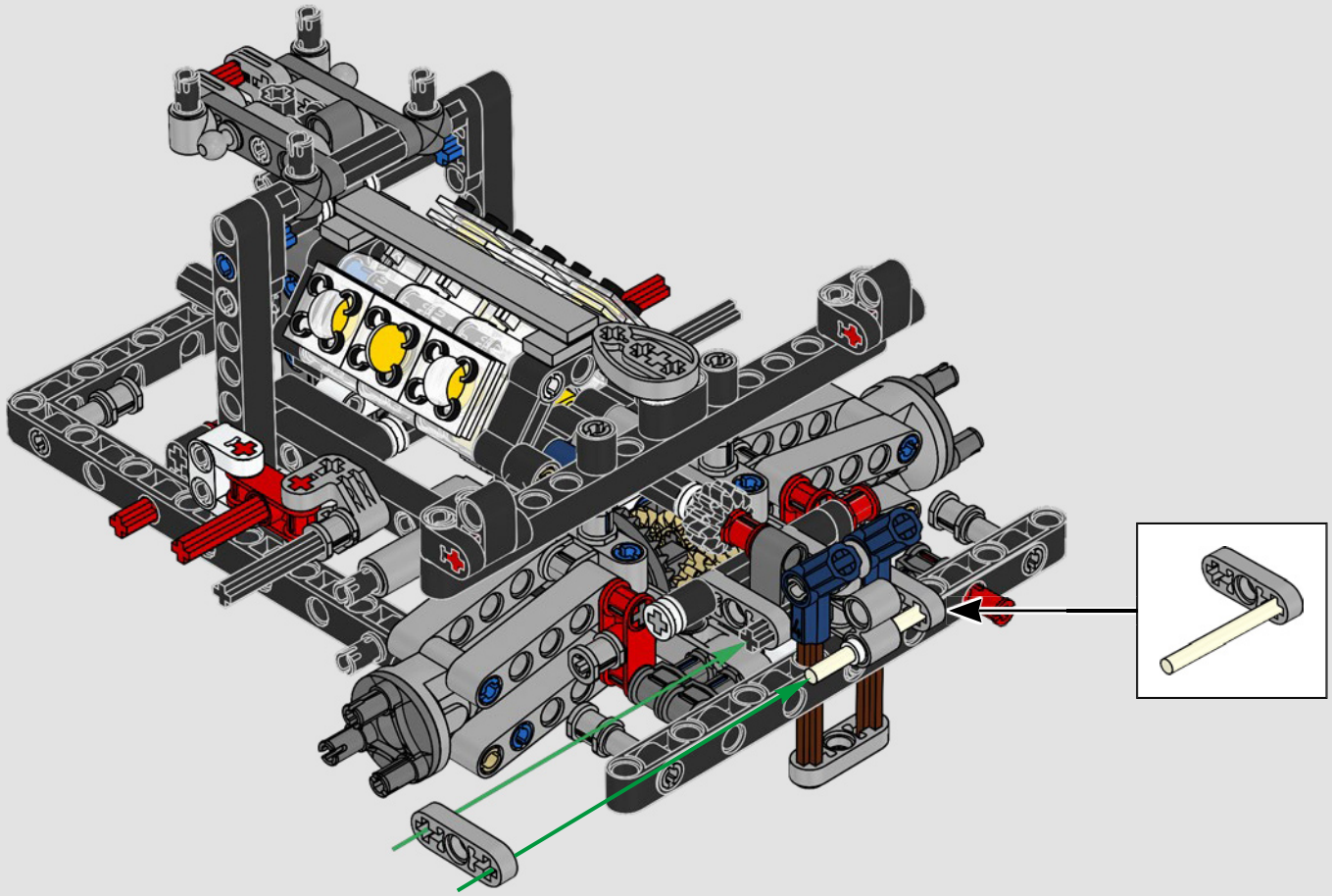

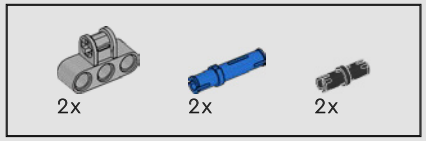

88

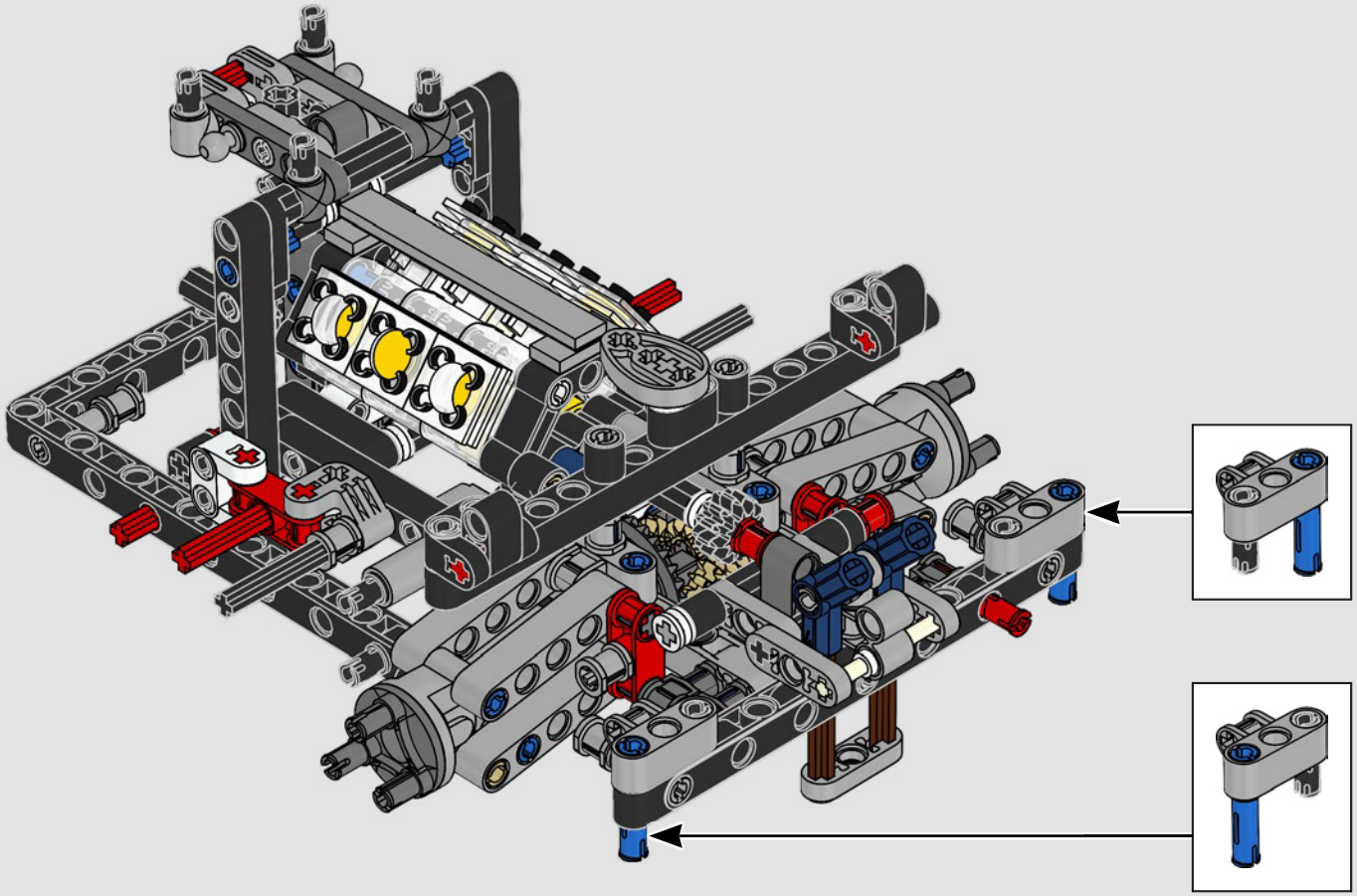

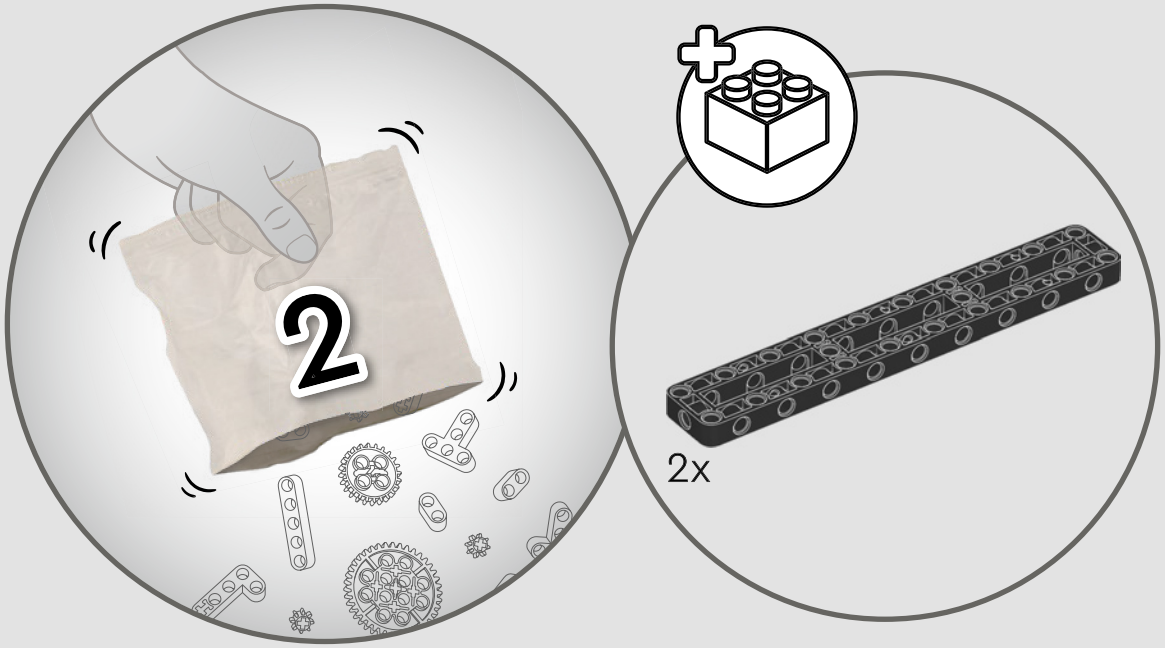
2
2x

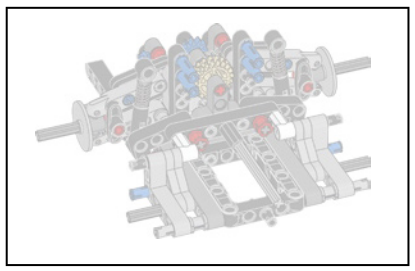

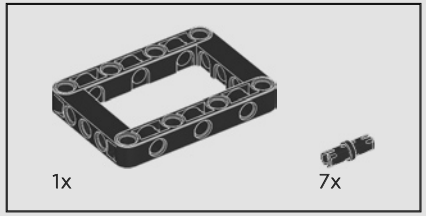

89

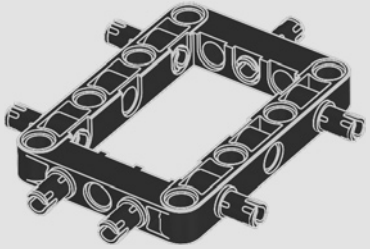

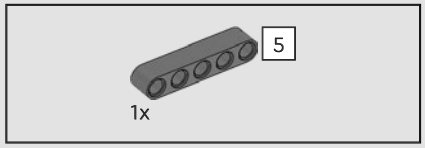

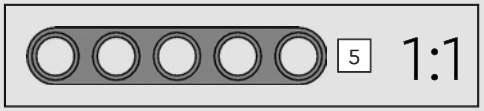

90

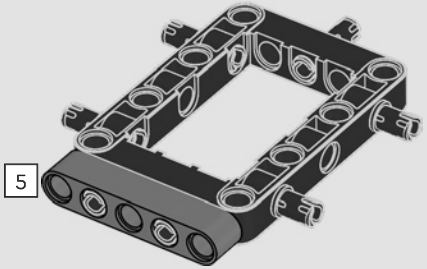

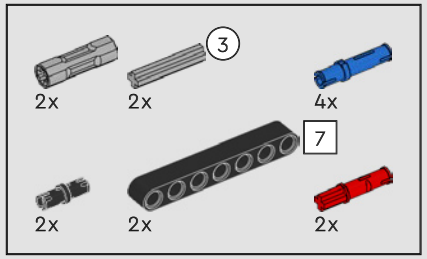

91

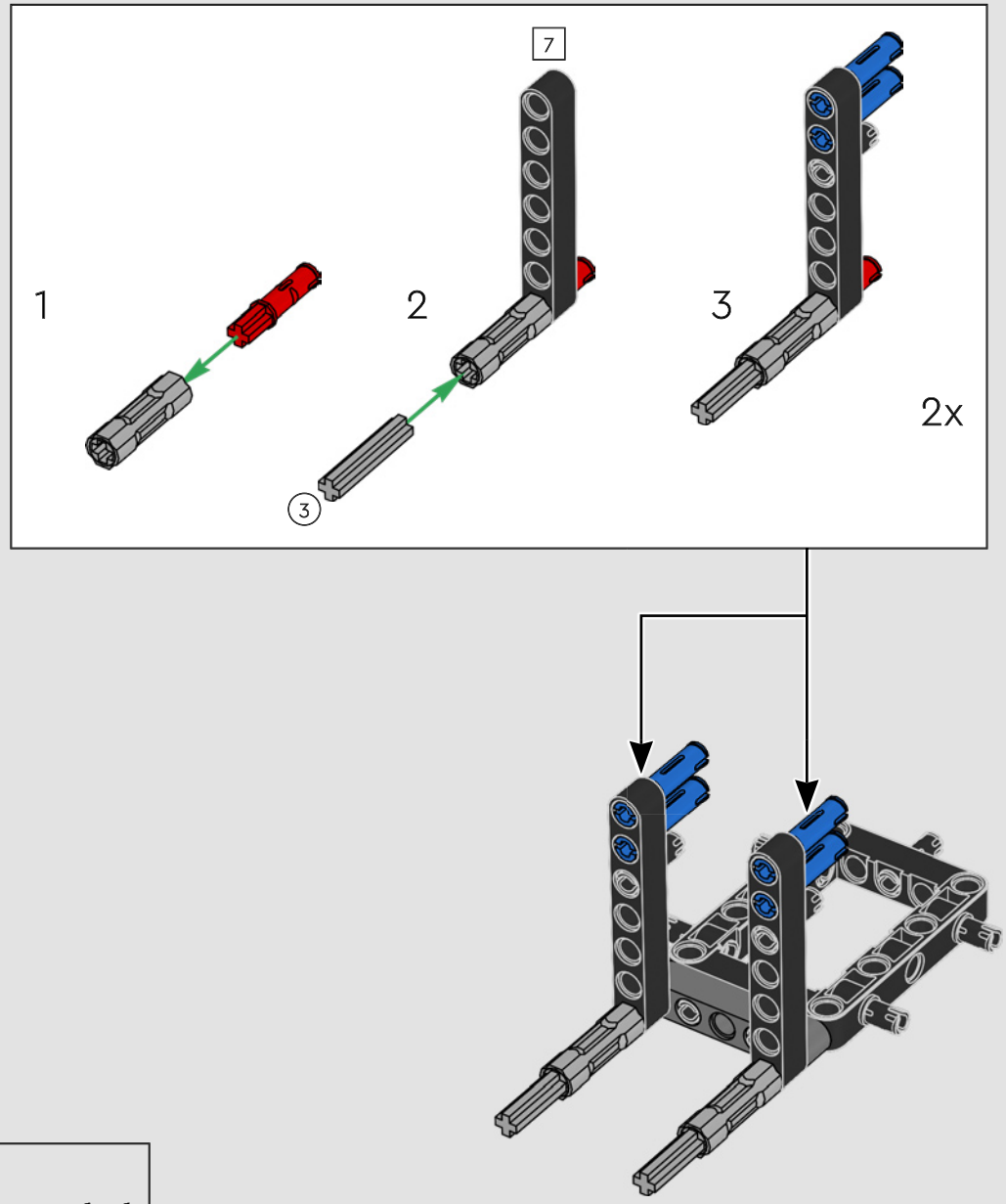

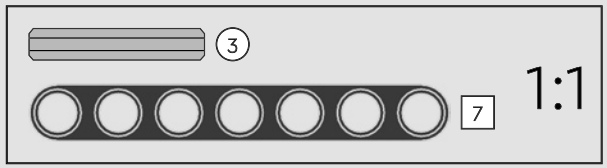

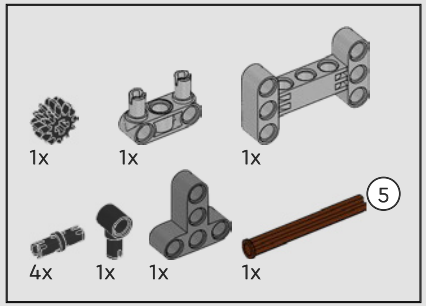

92

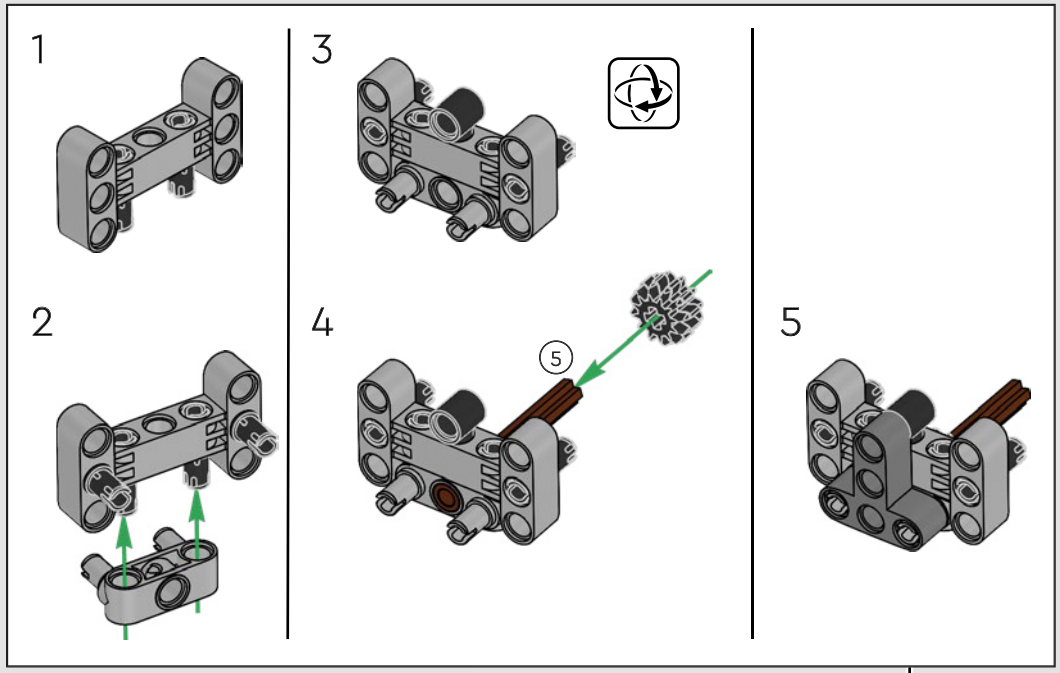

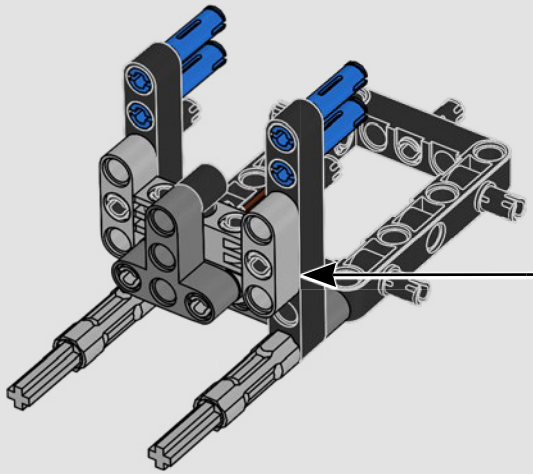

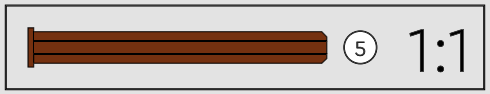

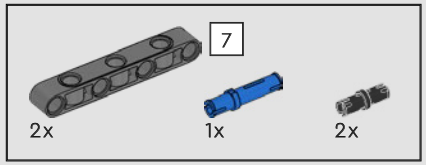

93

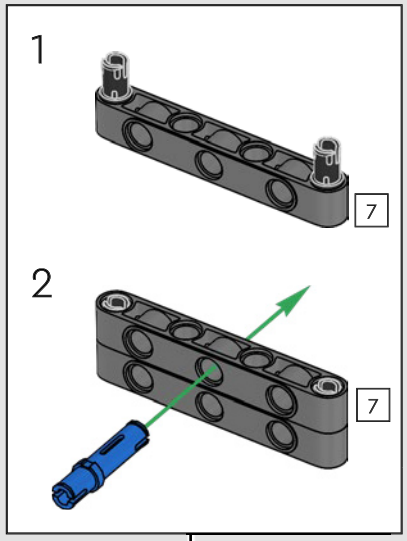

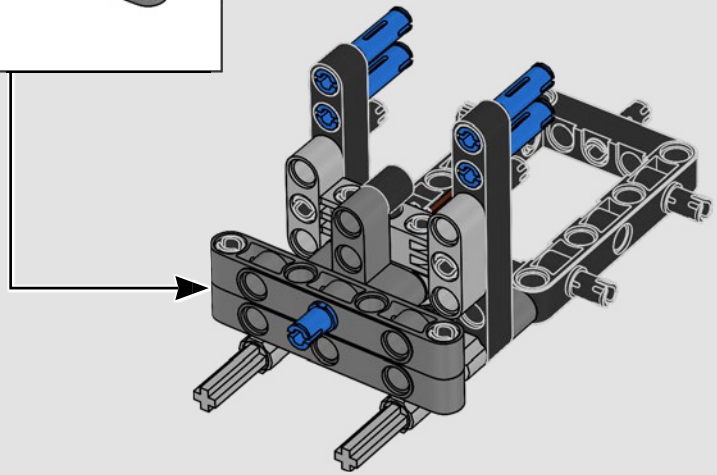

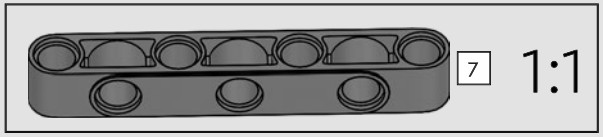

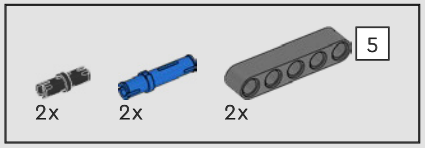

94

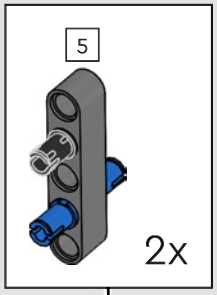

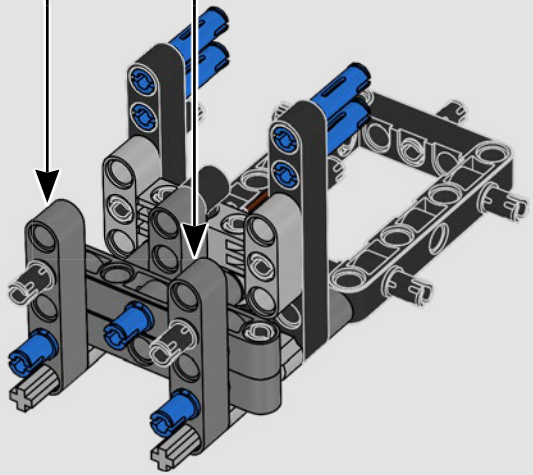

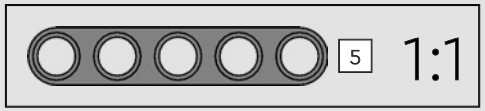

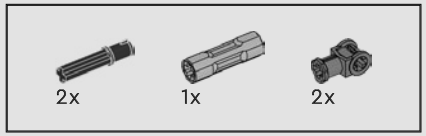

95

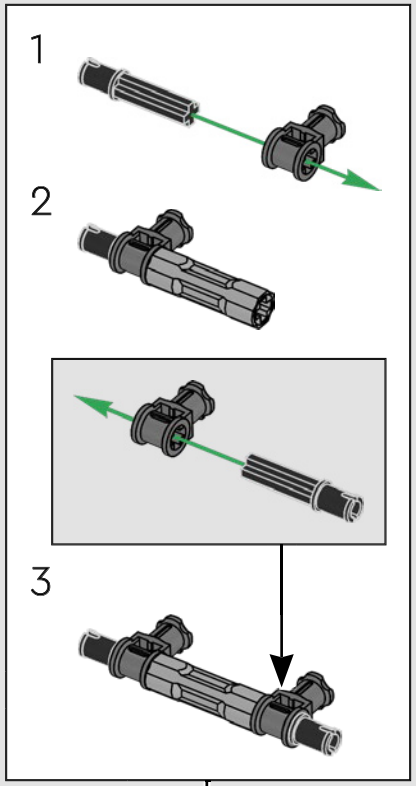

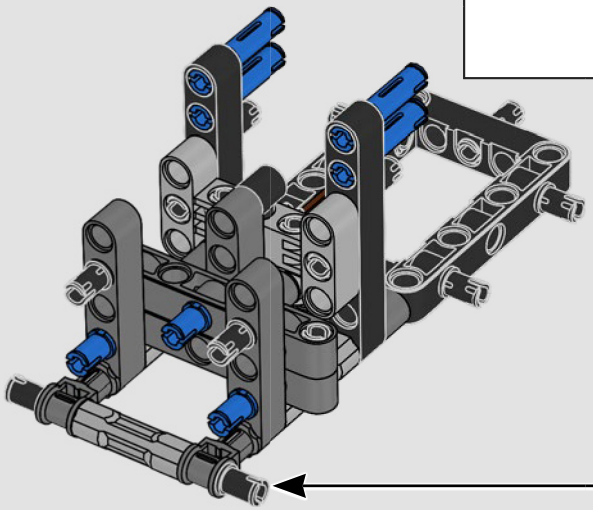

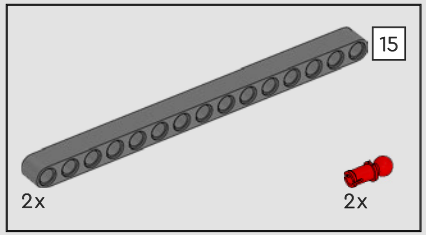

96

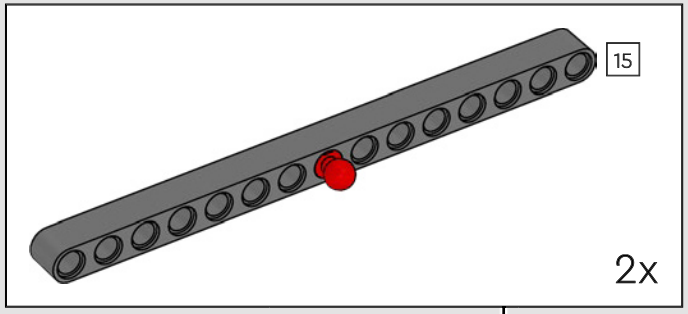

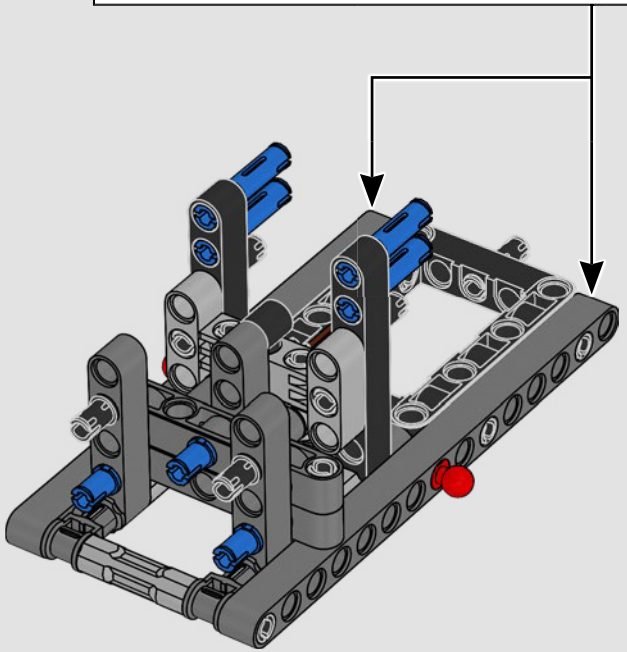

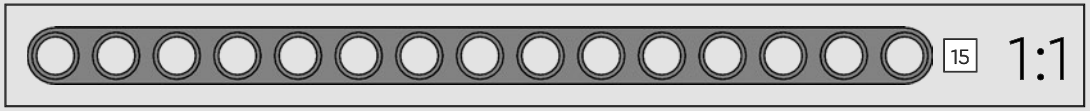

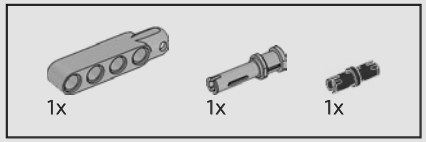

97

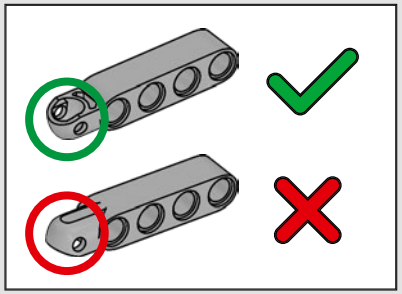

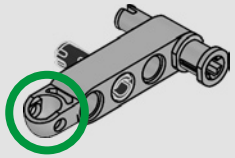

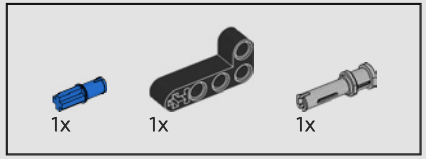

98

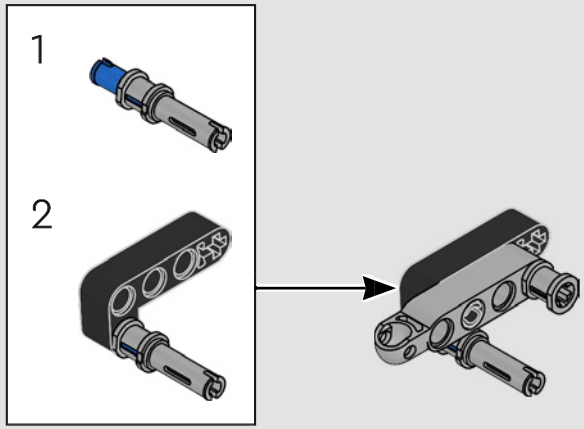

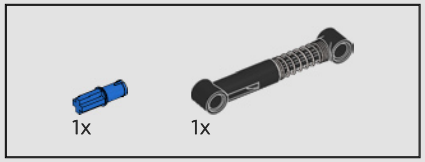

99

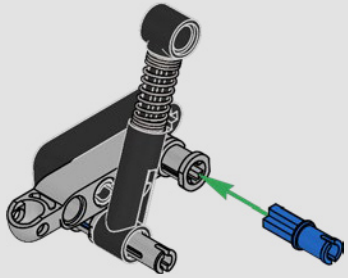

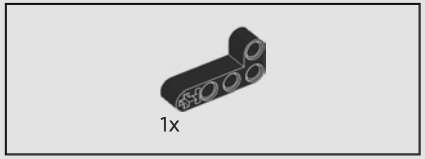

100

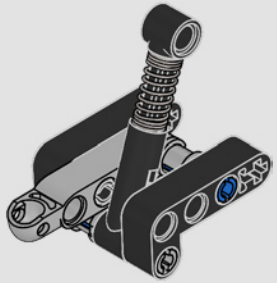

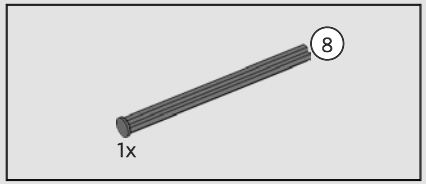

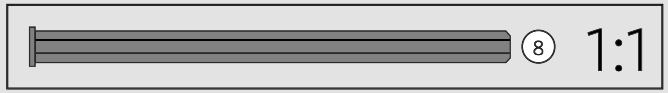

101

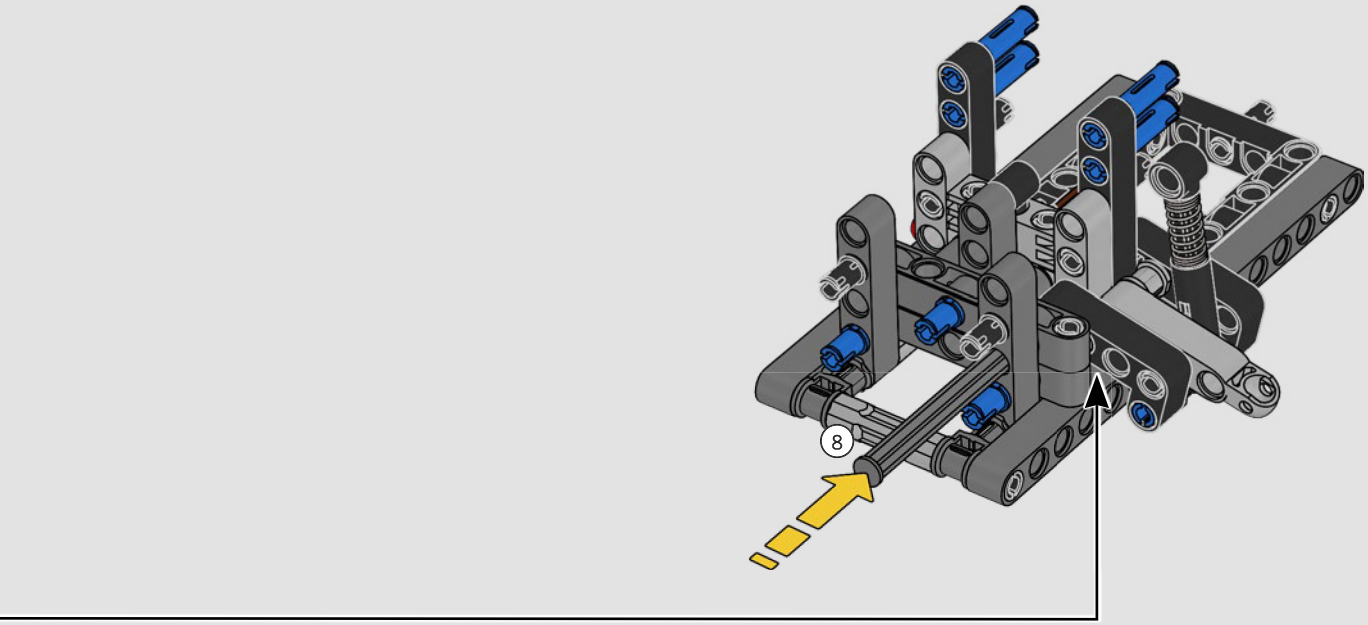

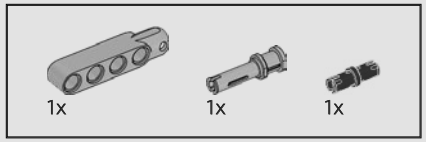

102

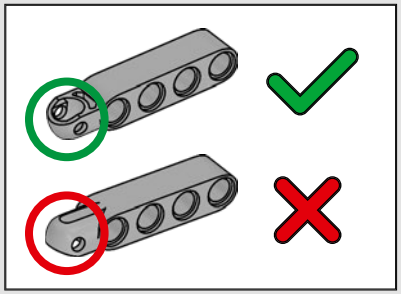

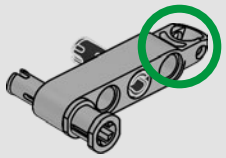

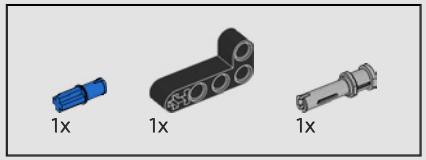

103

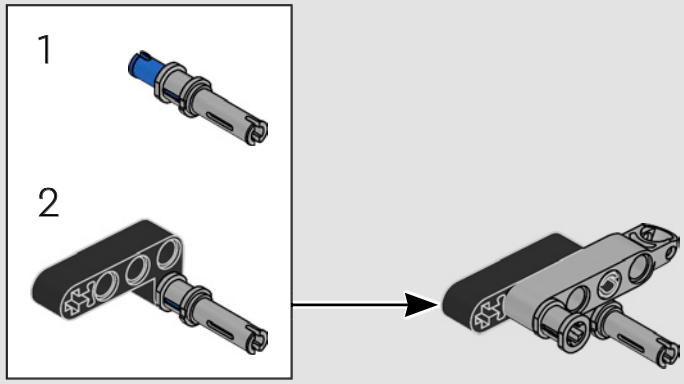

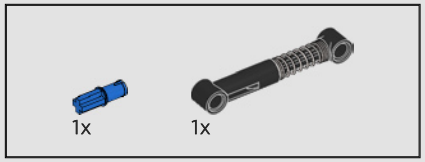

104

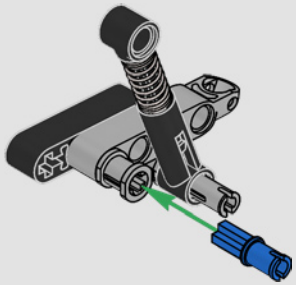

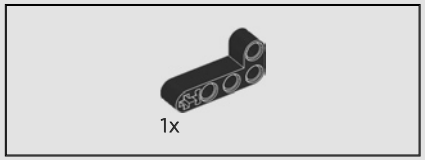

105

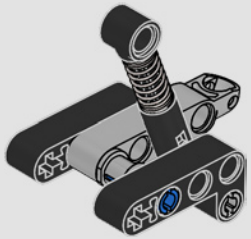

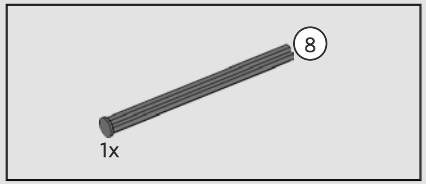

106

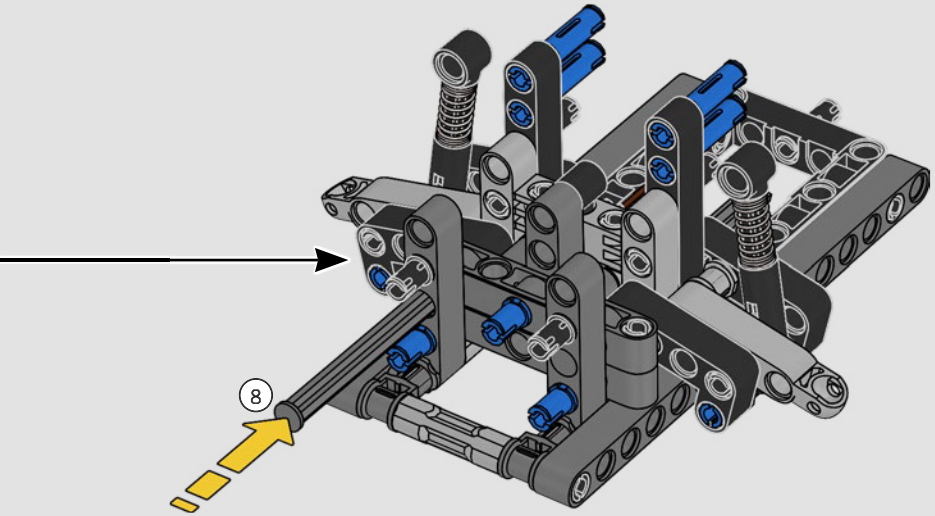

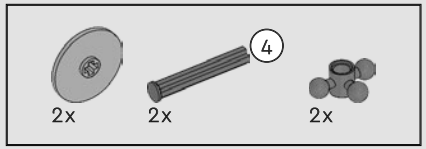

107

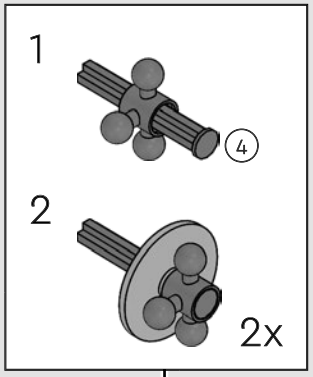

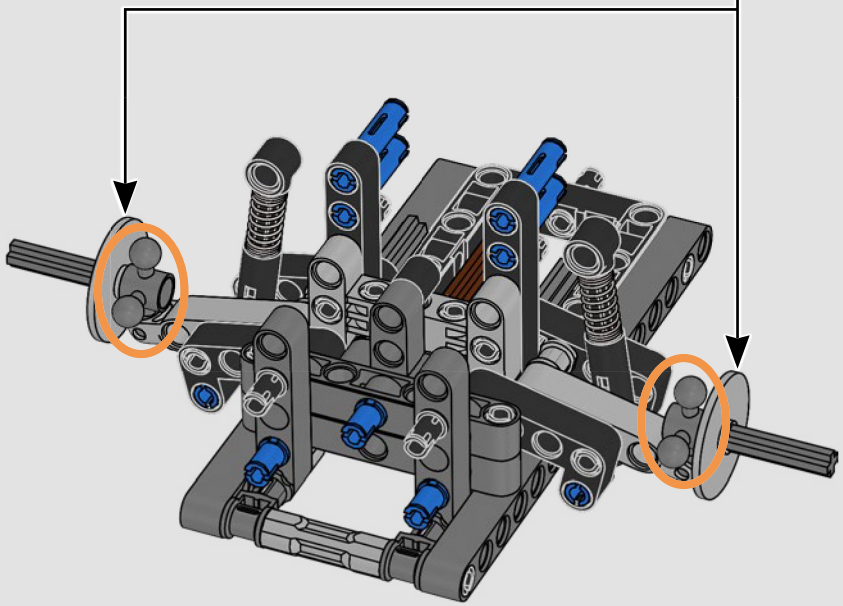

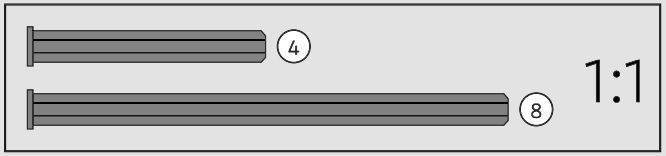

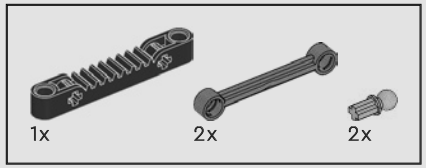

108

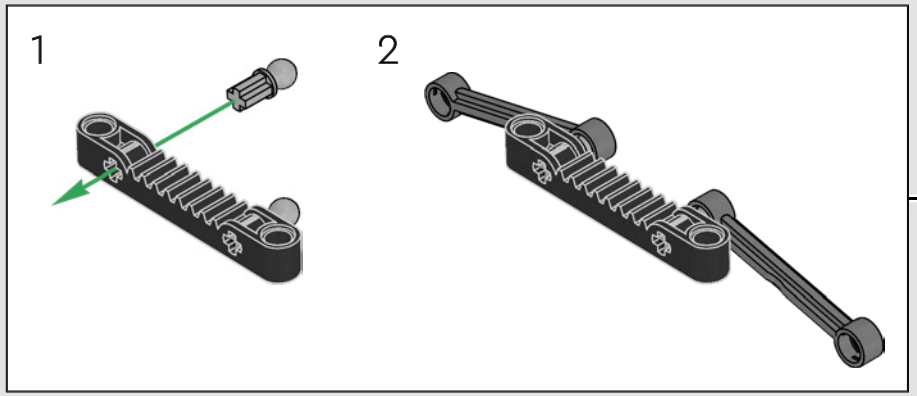

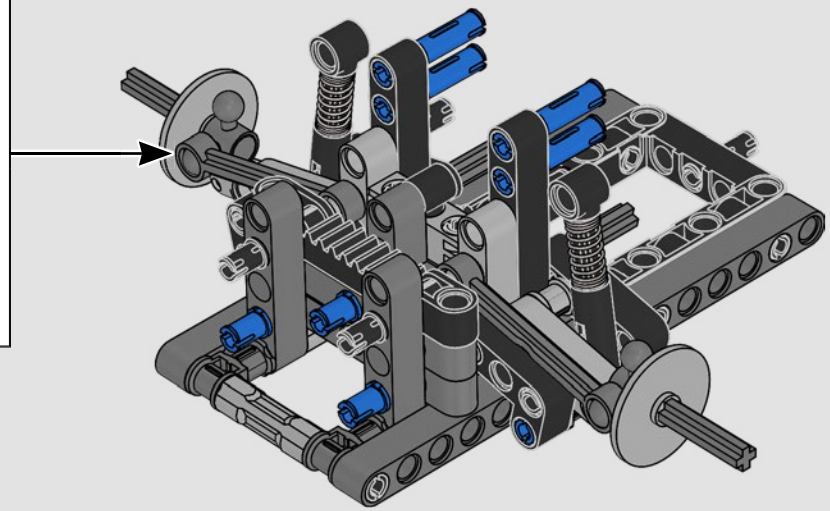

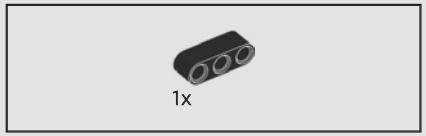

109

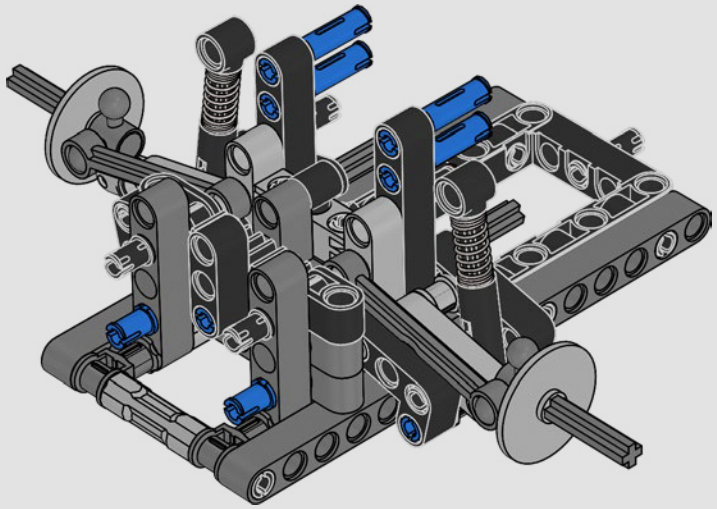

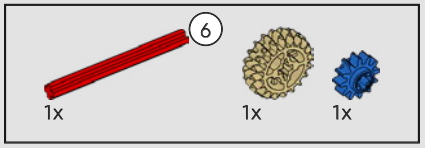

110

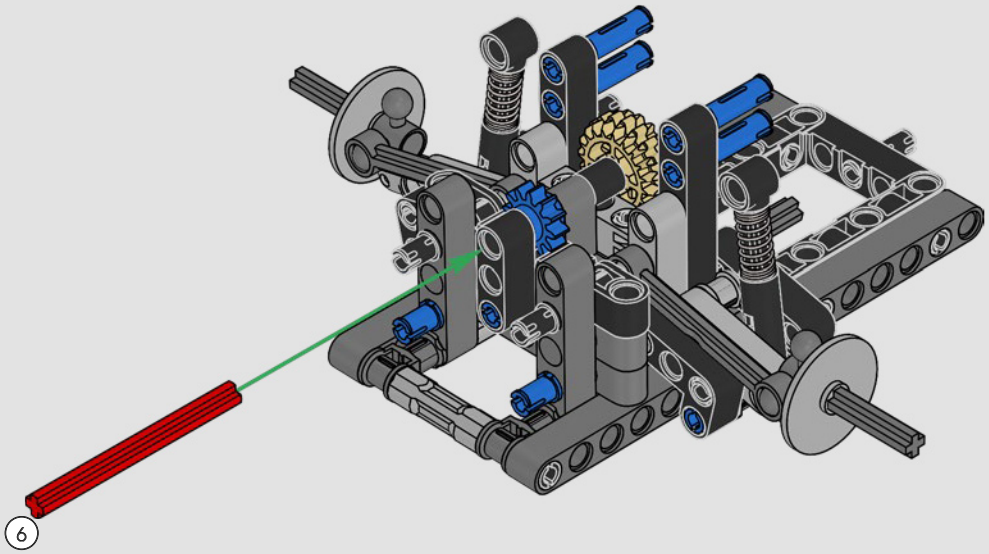

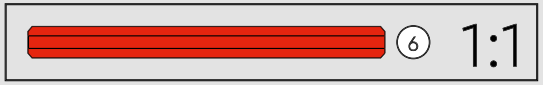

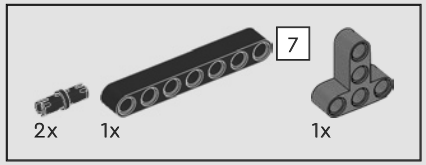

111

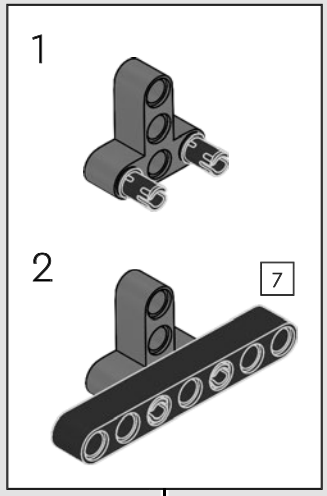

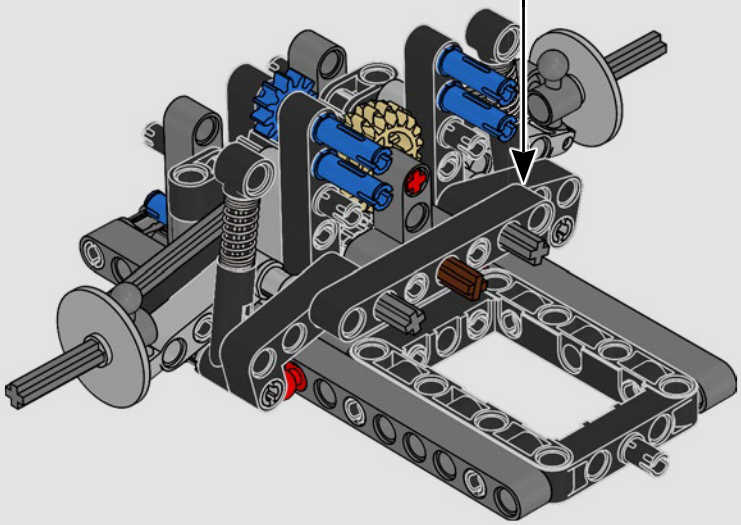

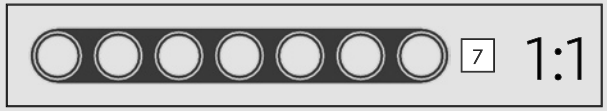

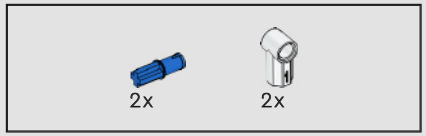

112

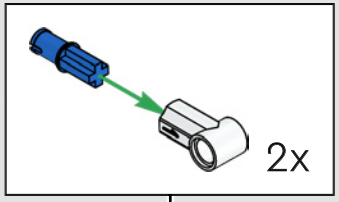

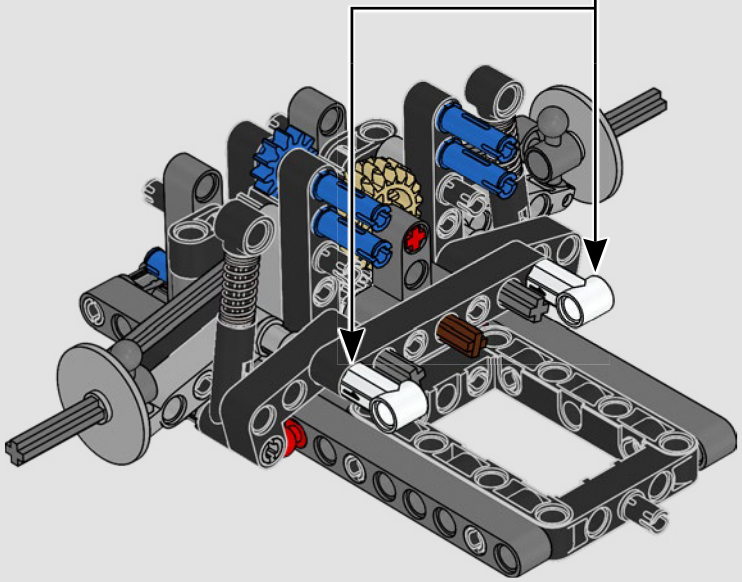

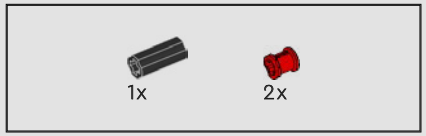

113

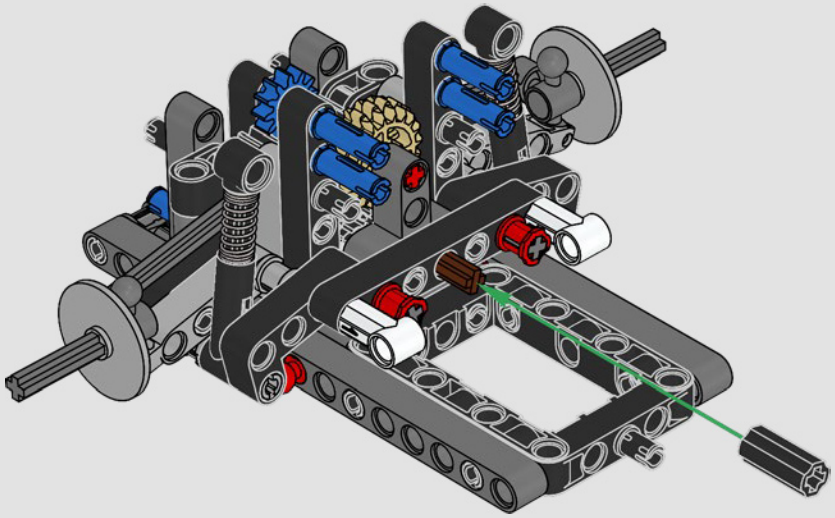

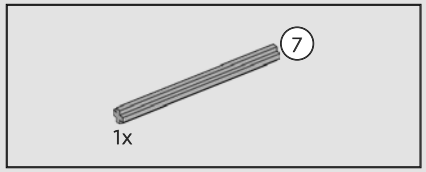

114

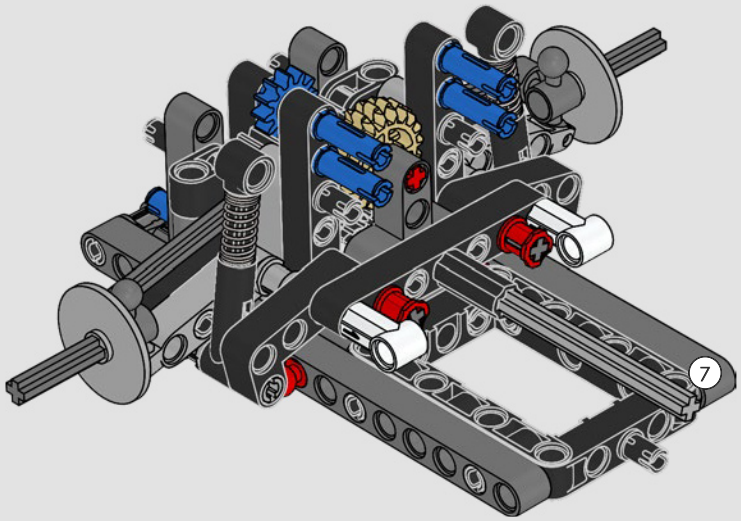

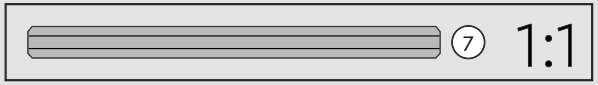

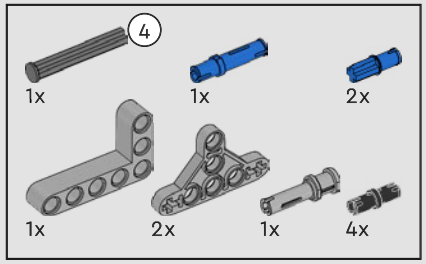

115

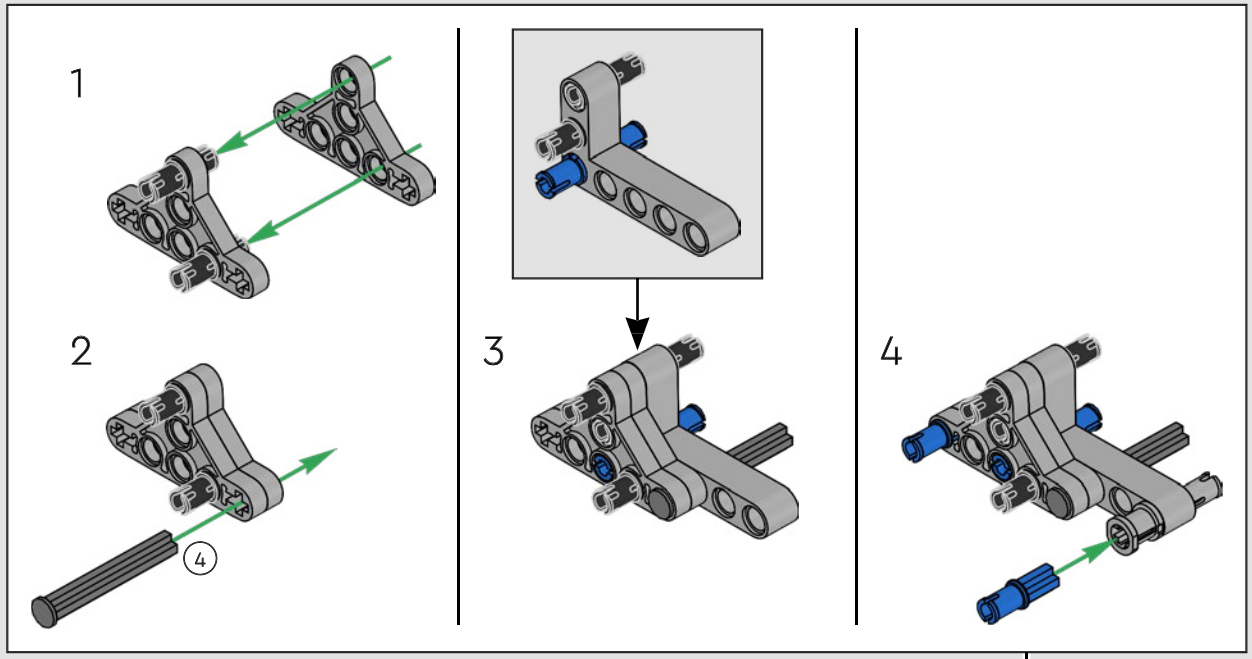

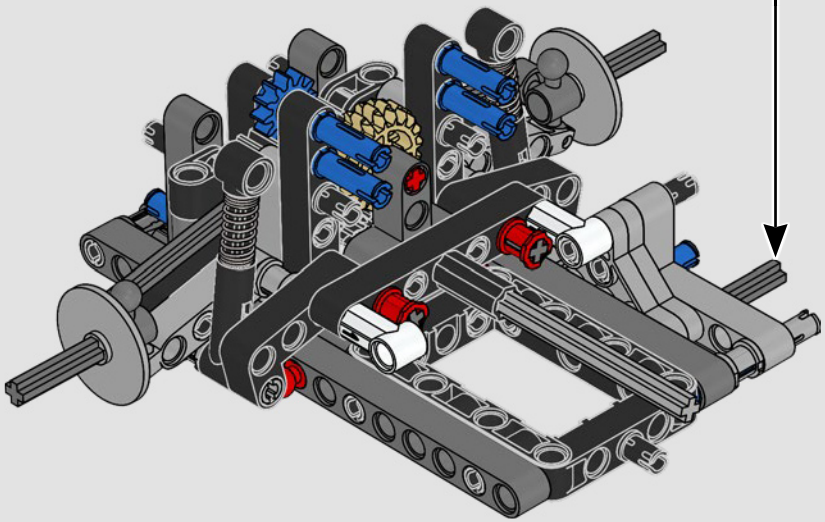

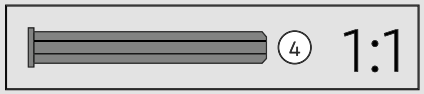

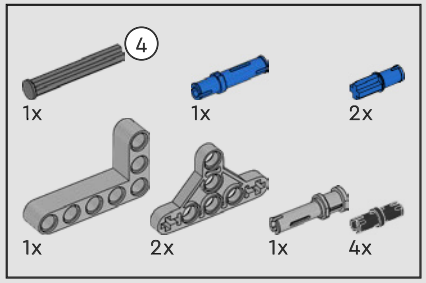

116

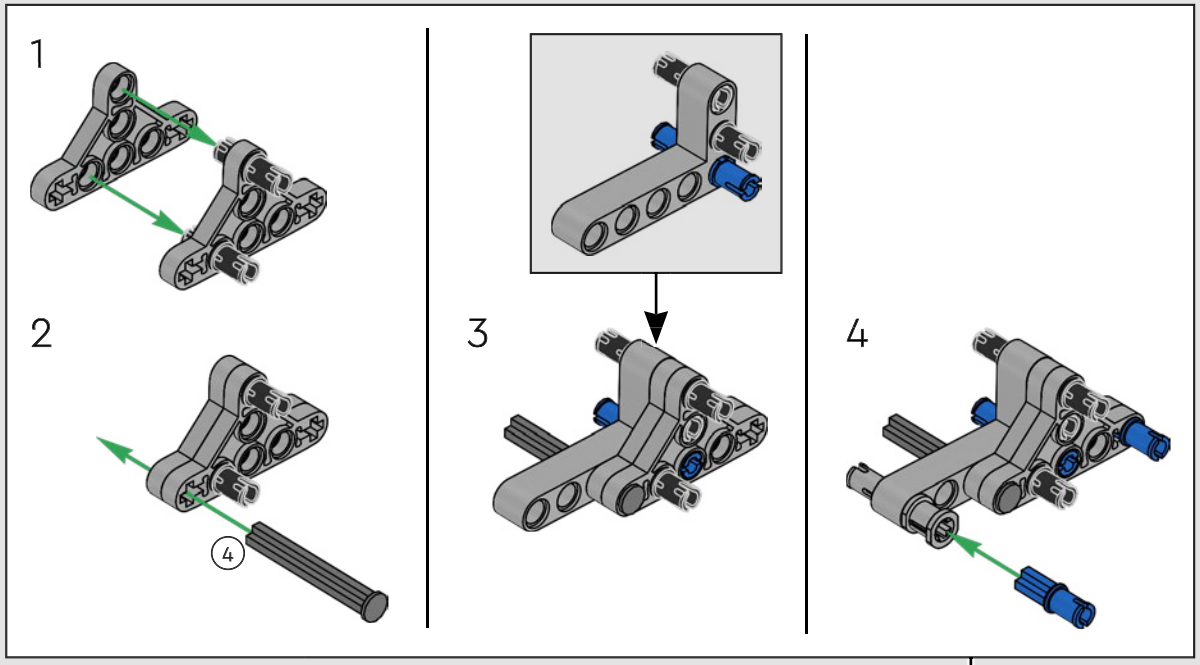

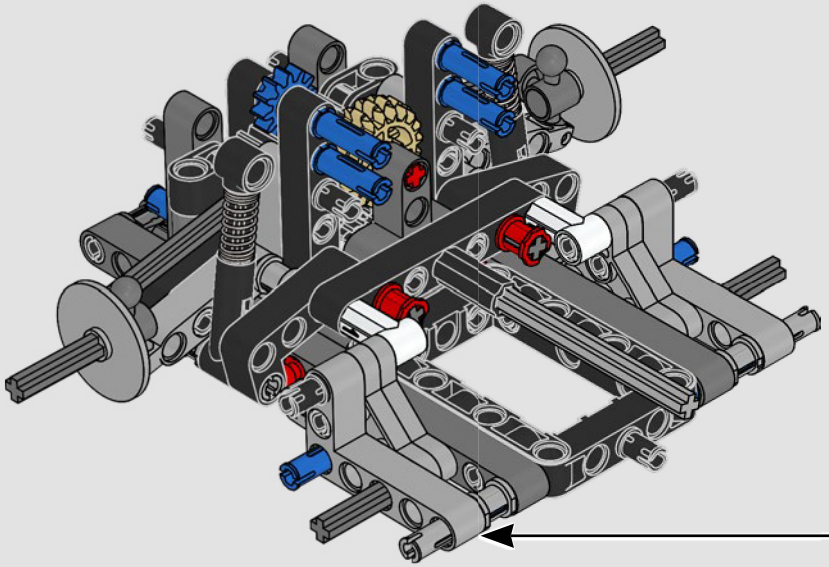

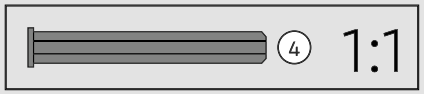

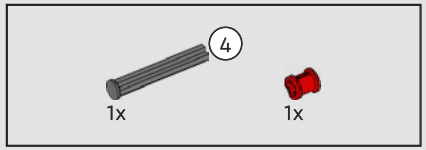

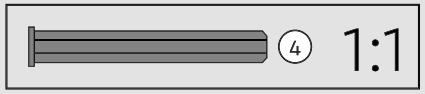

117

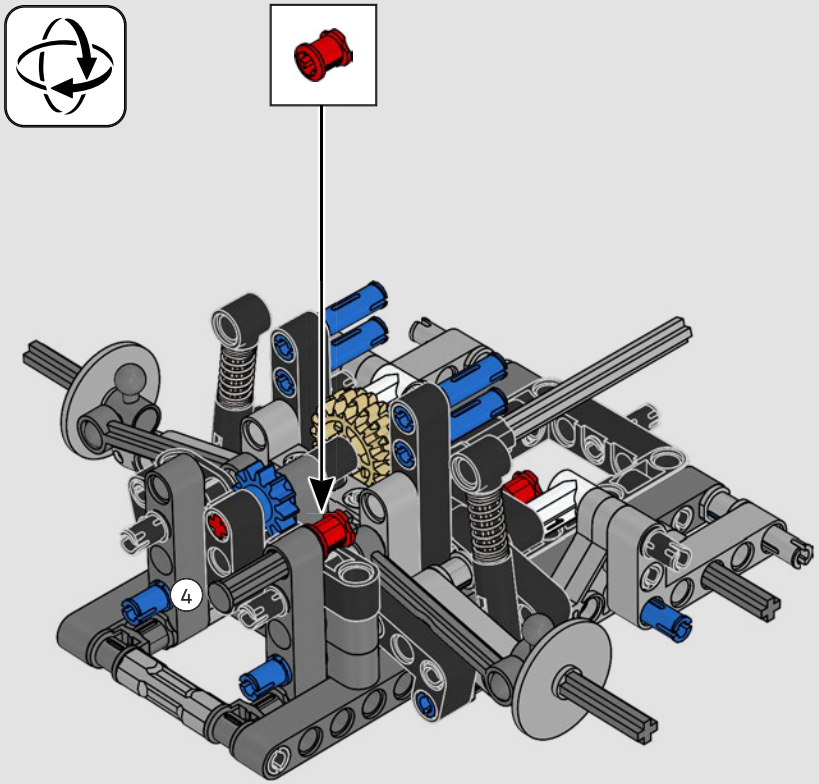

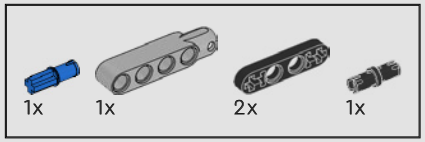

118

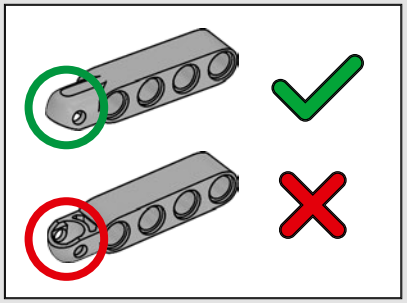

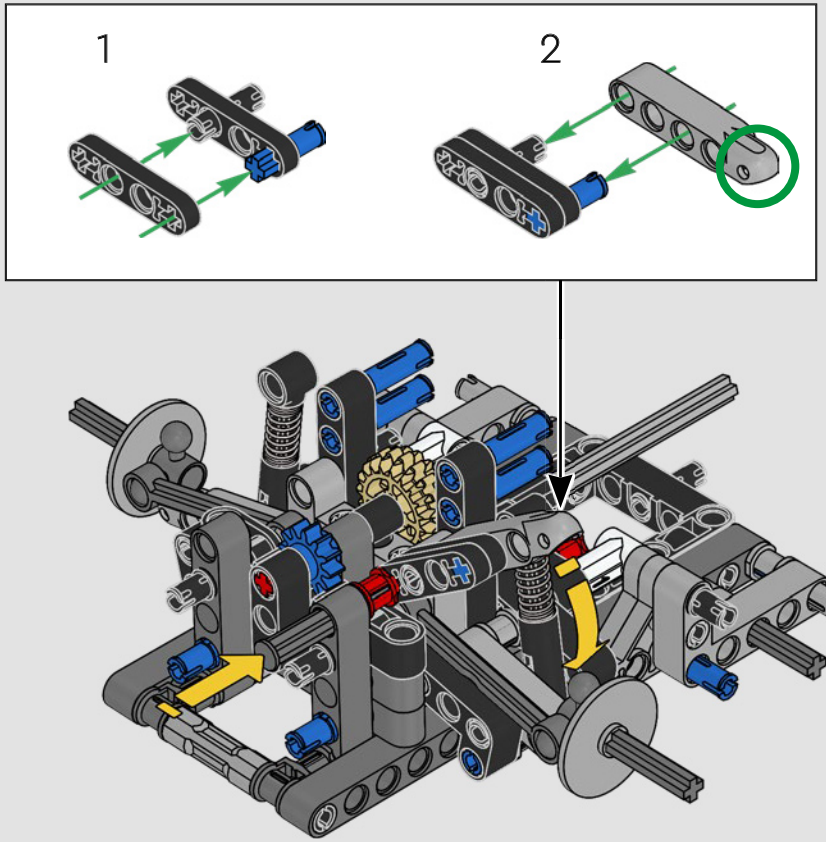

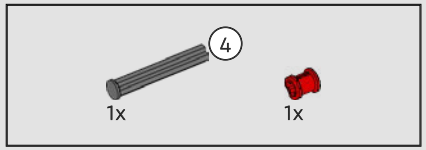

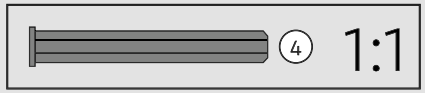

119

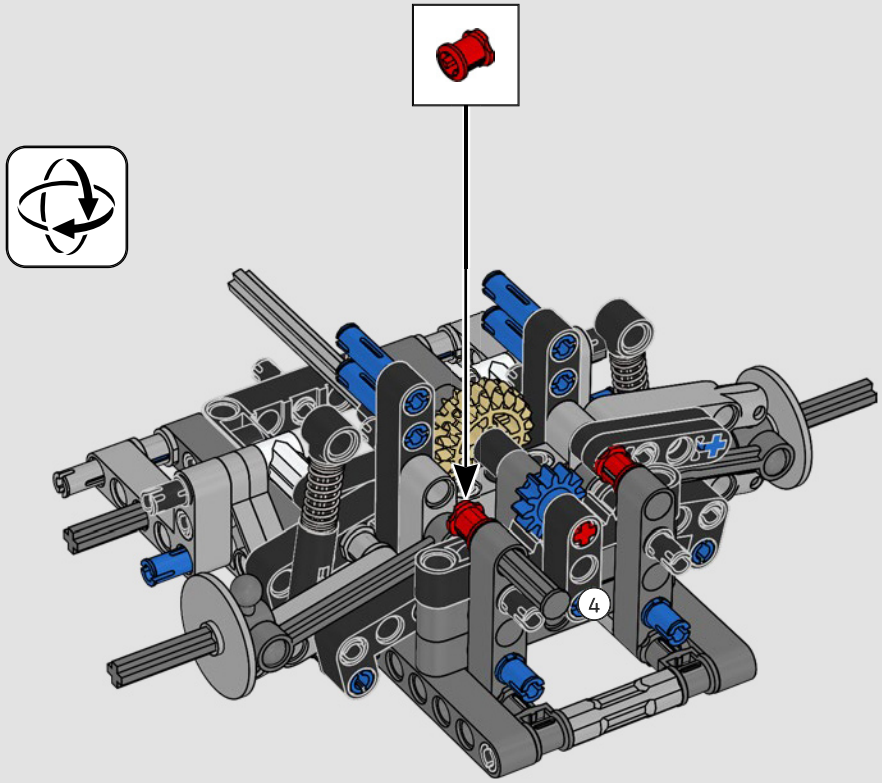

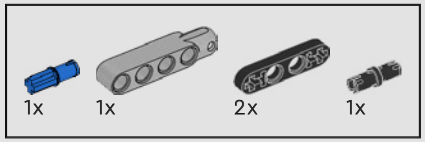

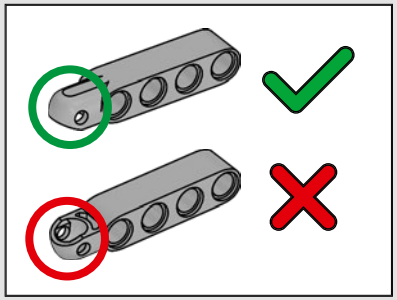

120

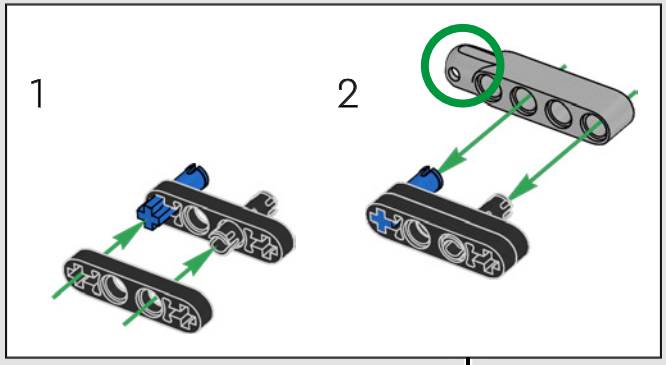

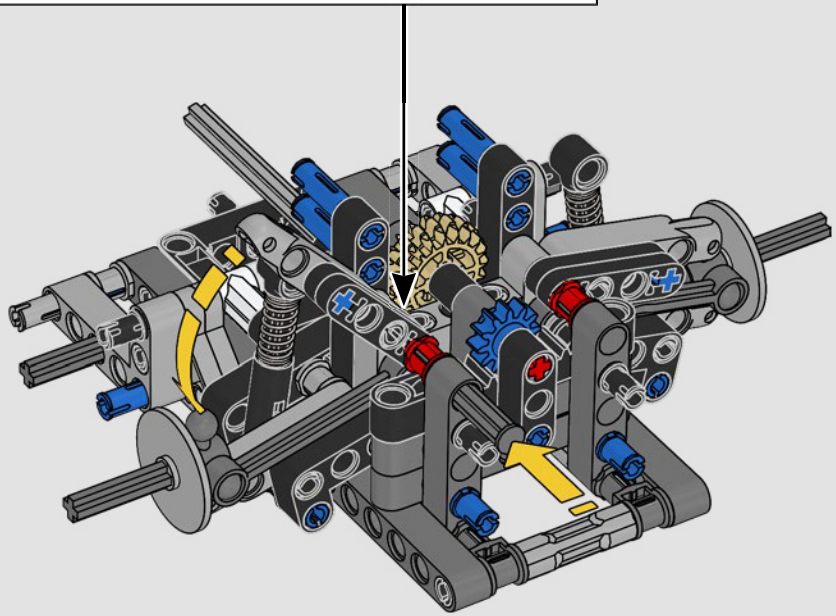

121

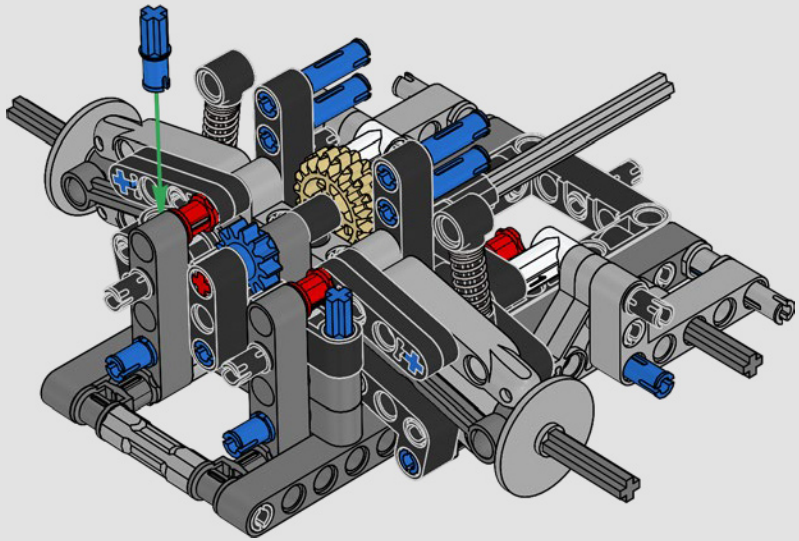

122

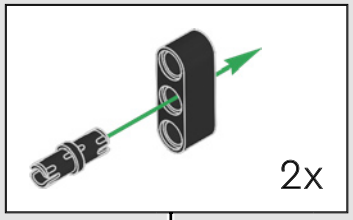

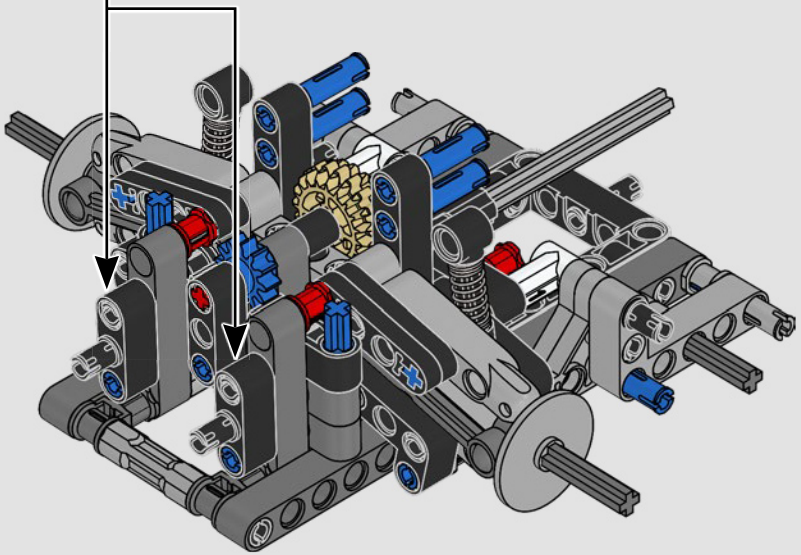

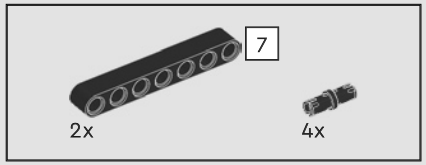

123

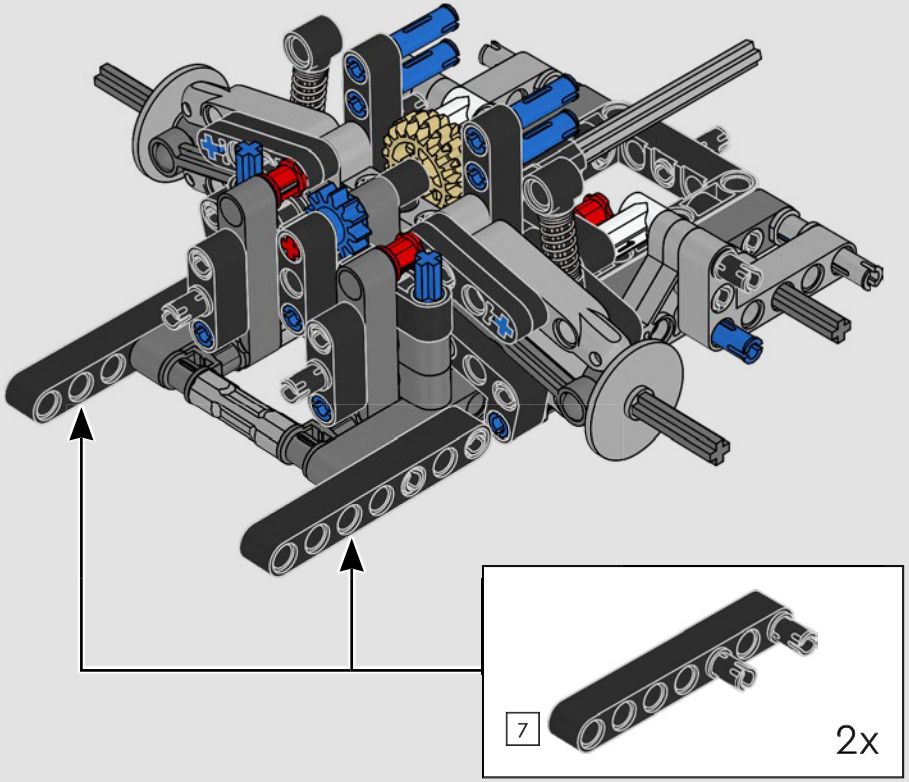

124

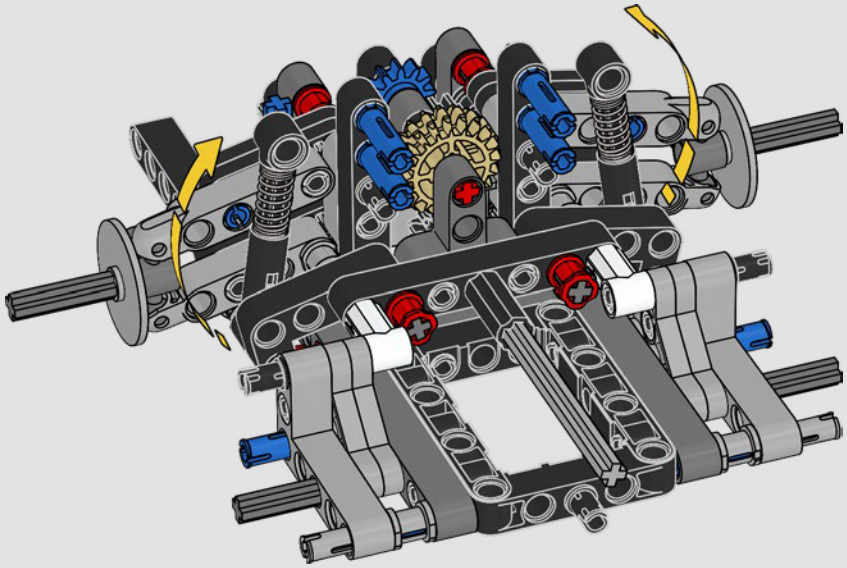

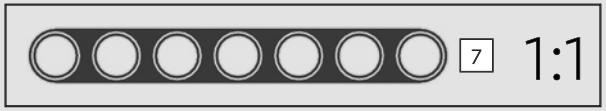

125

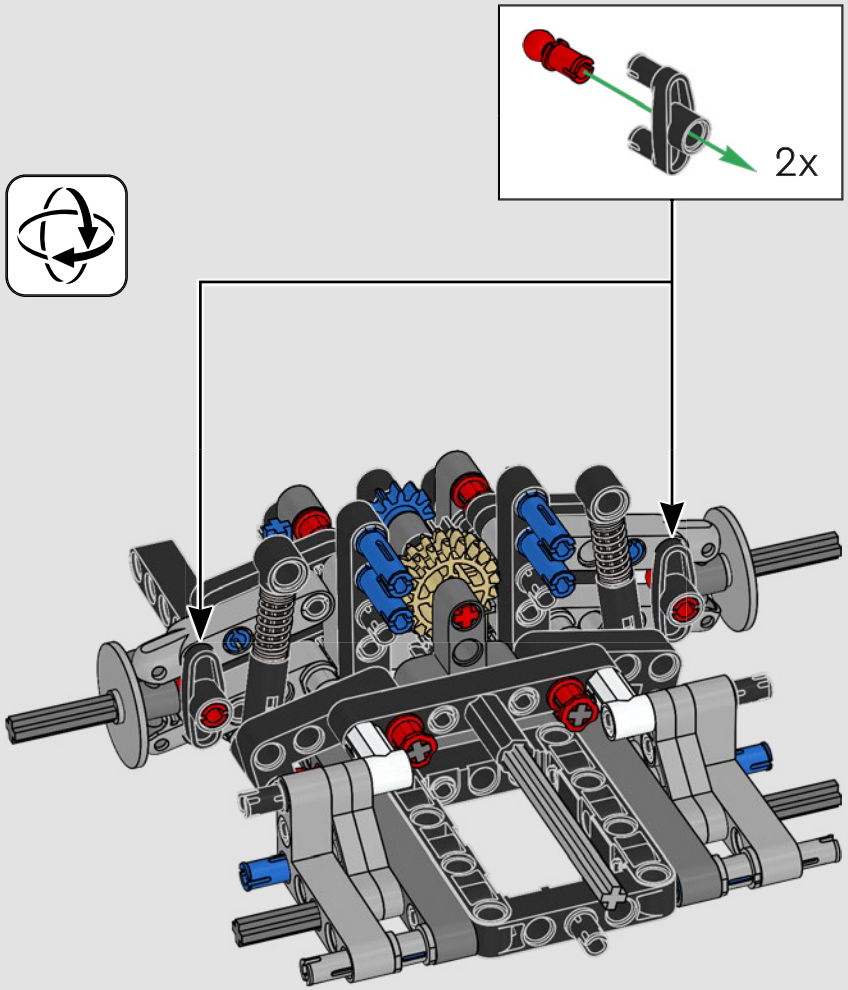

126

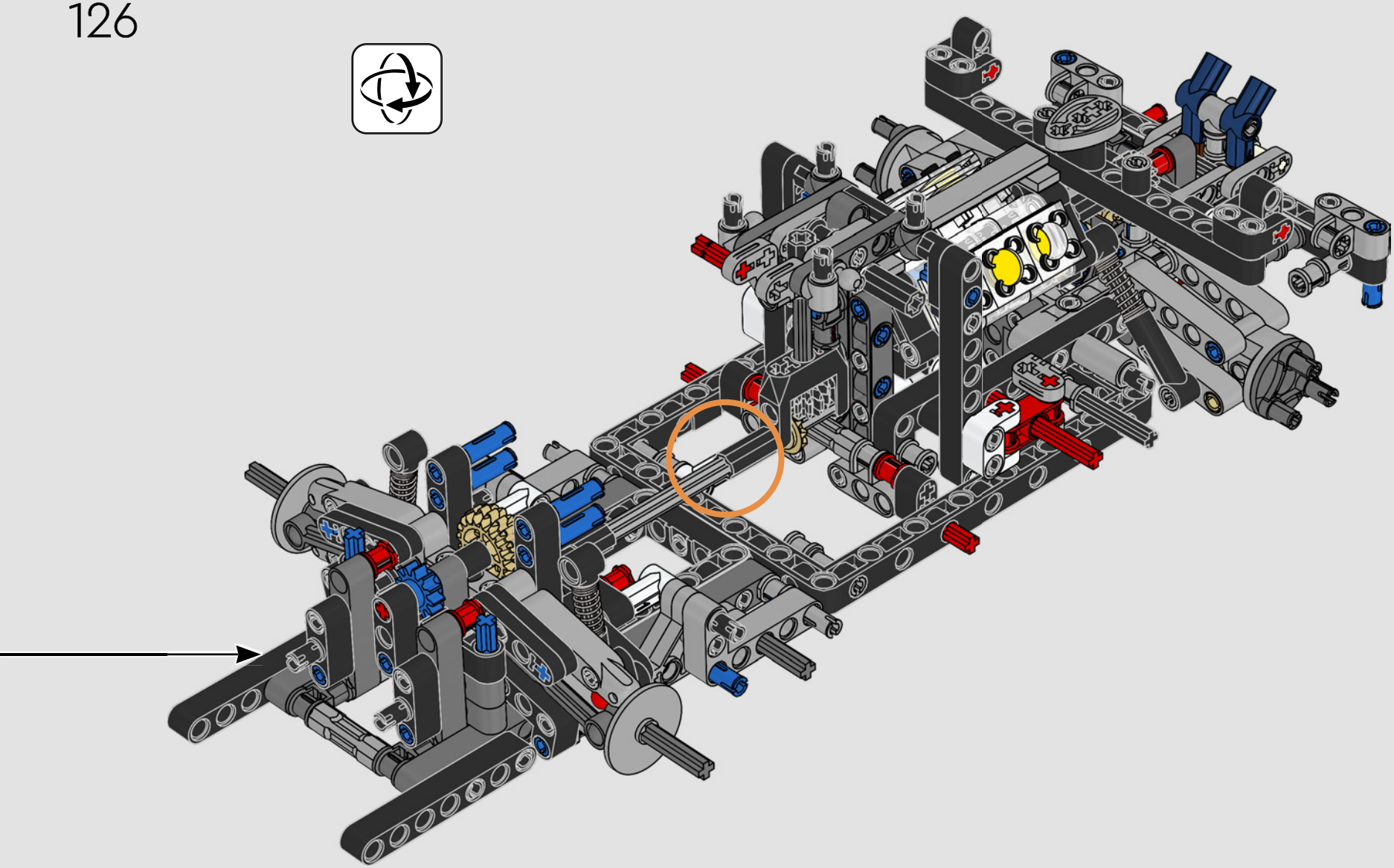

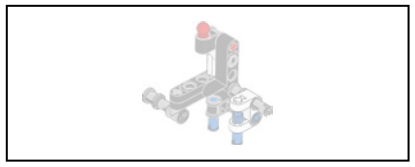

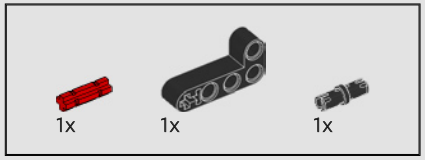

127

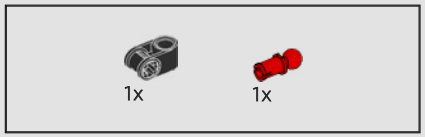

128

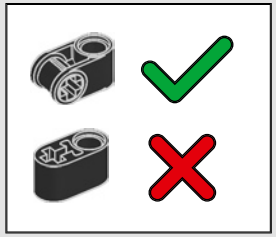

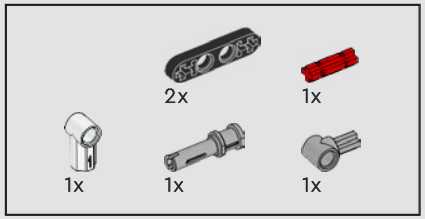

129

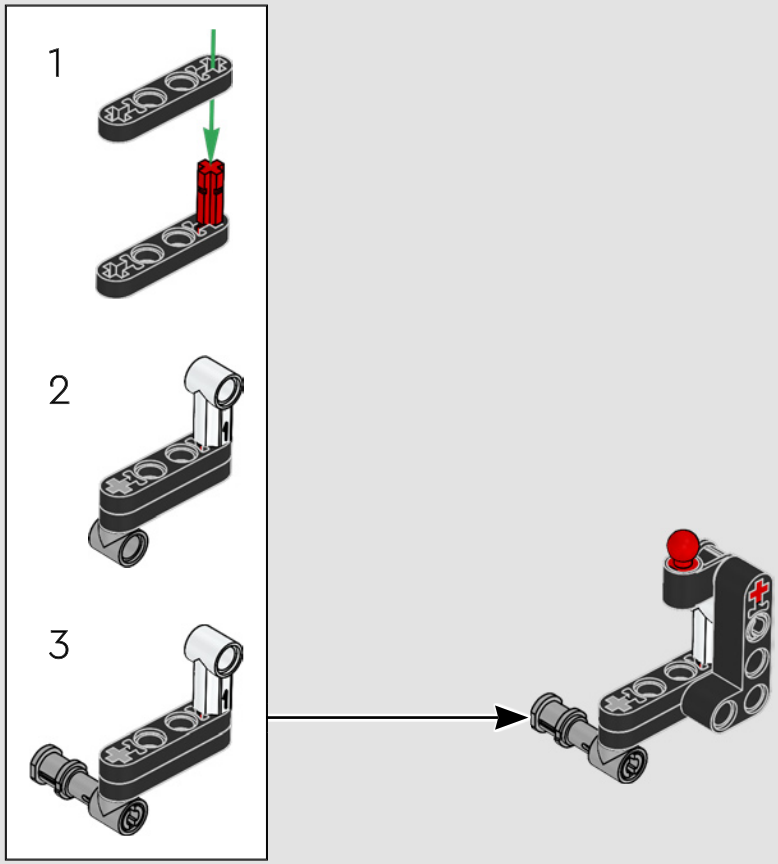

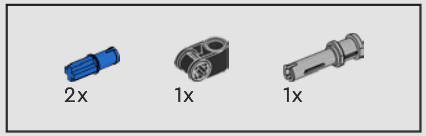

130

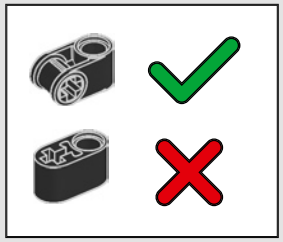

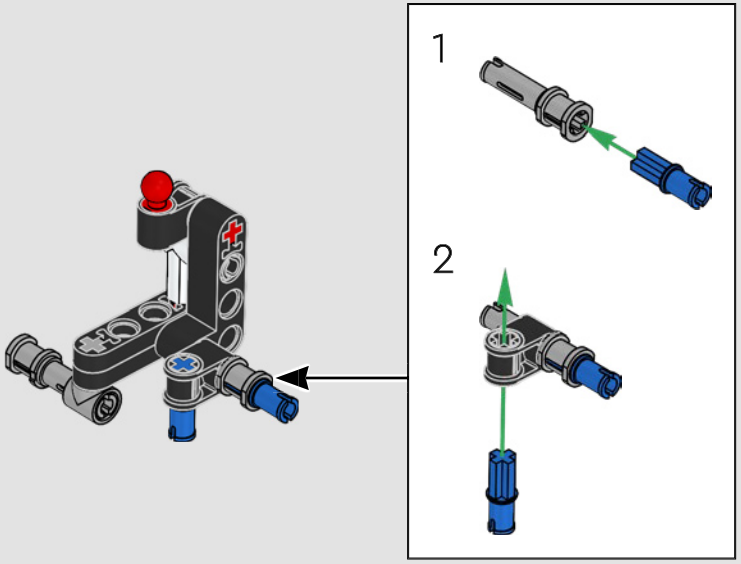

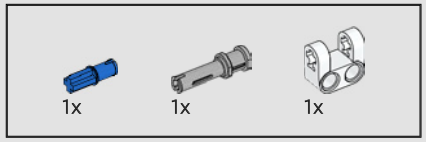

131

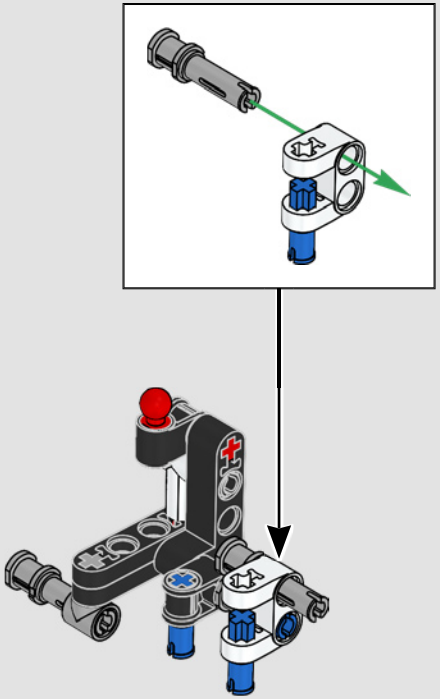

132

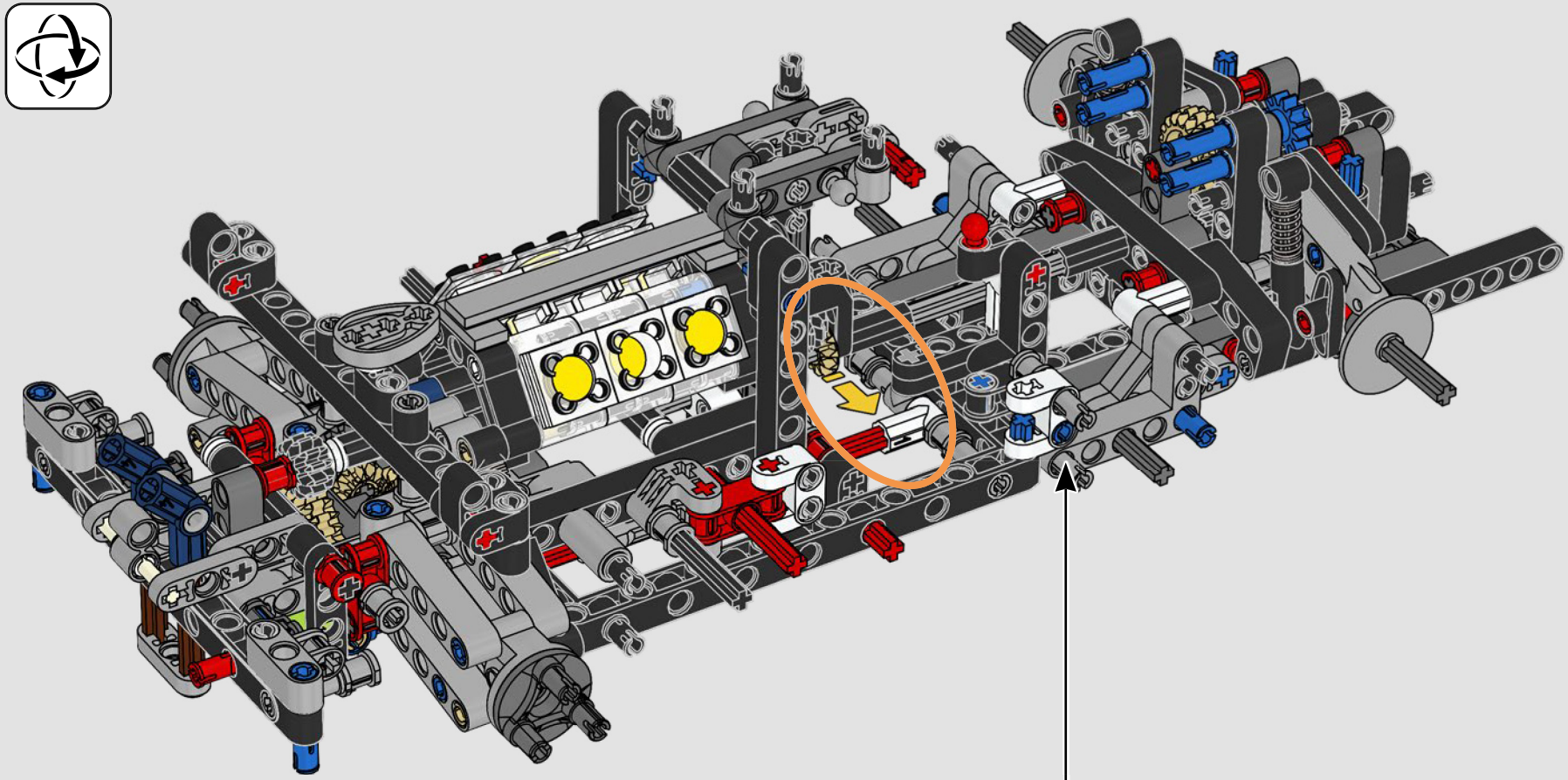

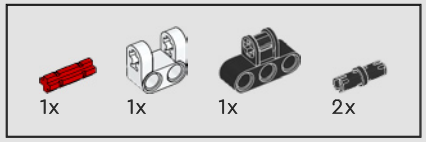

133

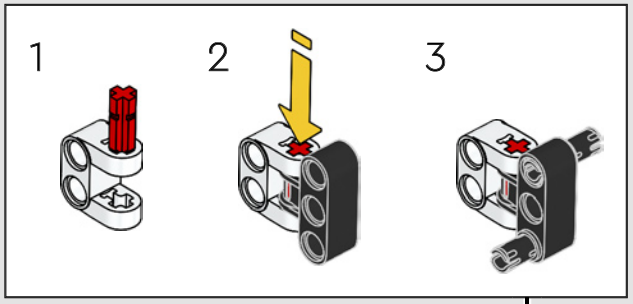

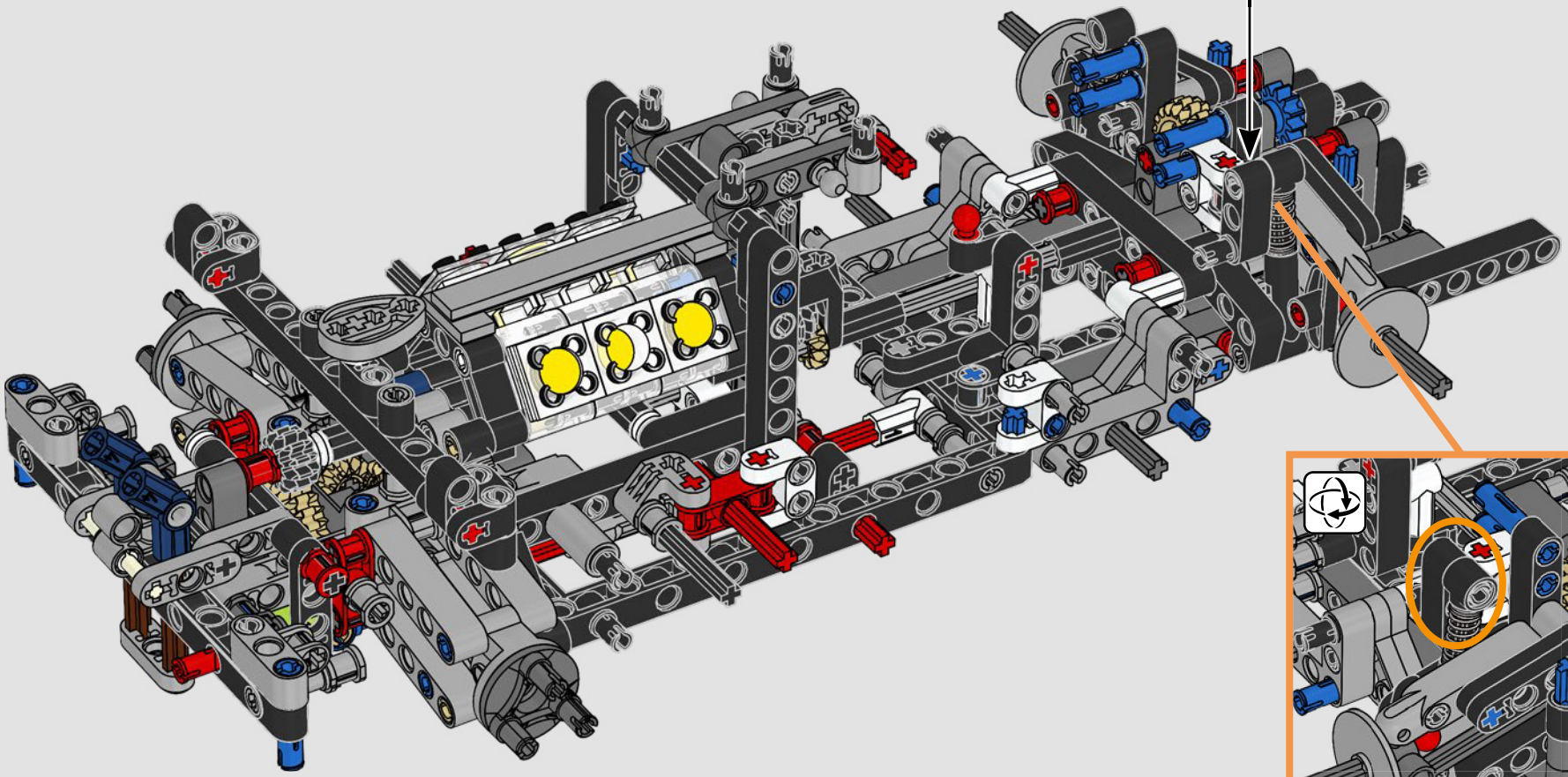

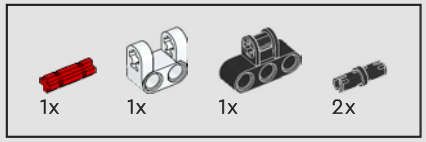

134

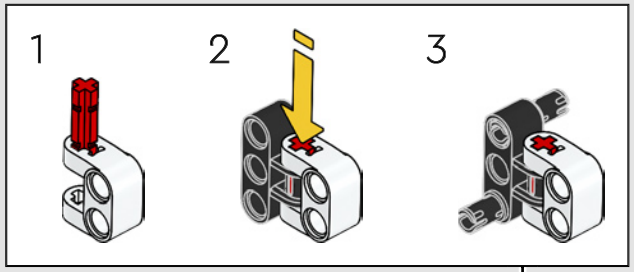

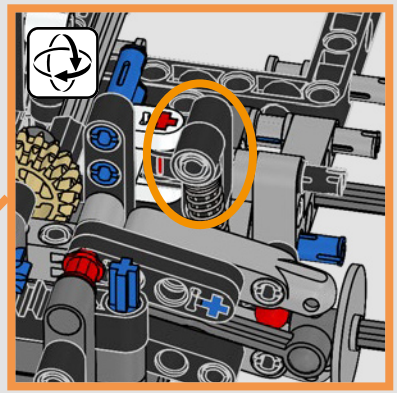

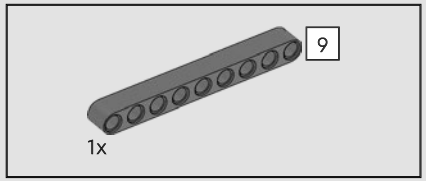

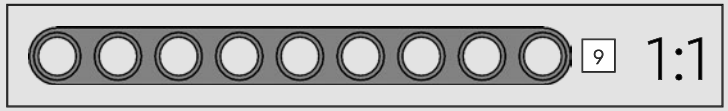

135

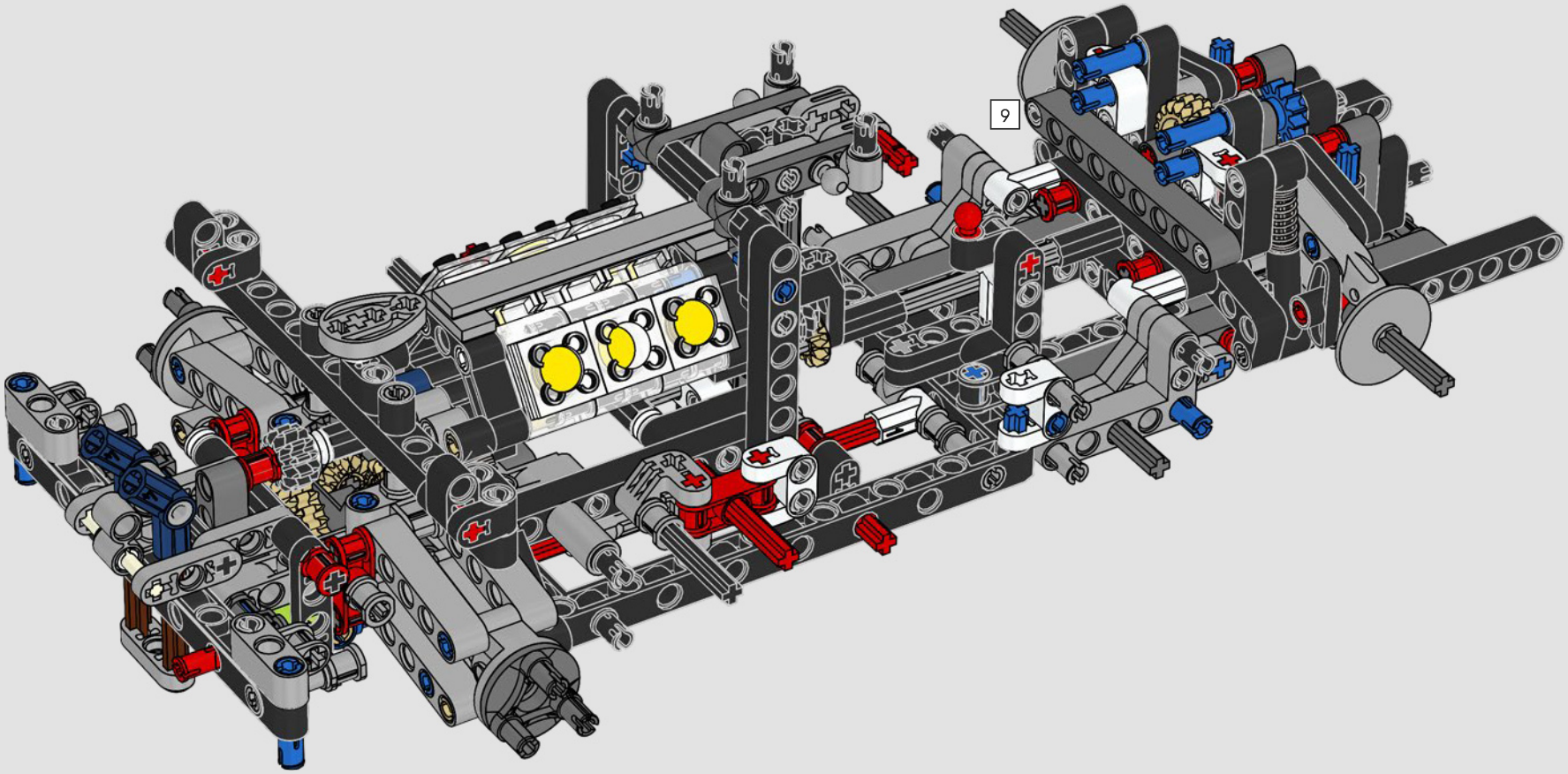

136

1:1

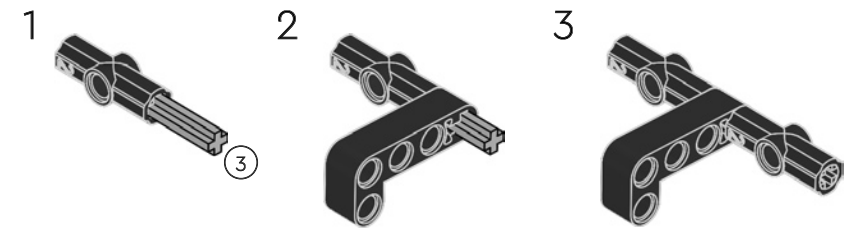

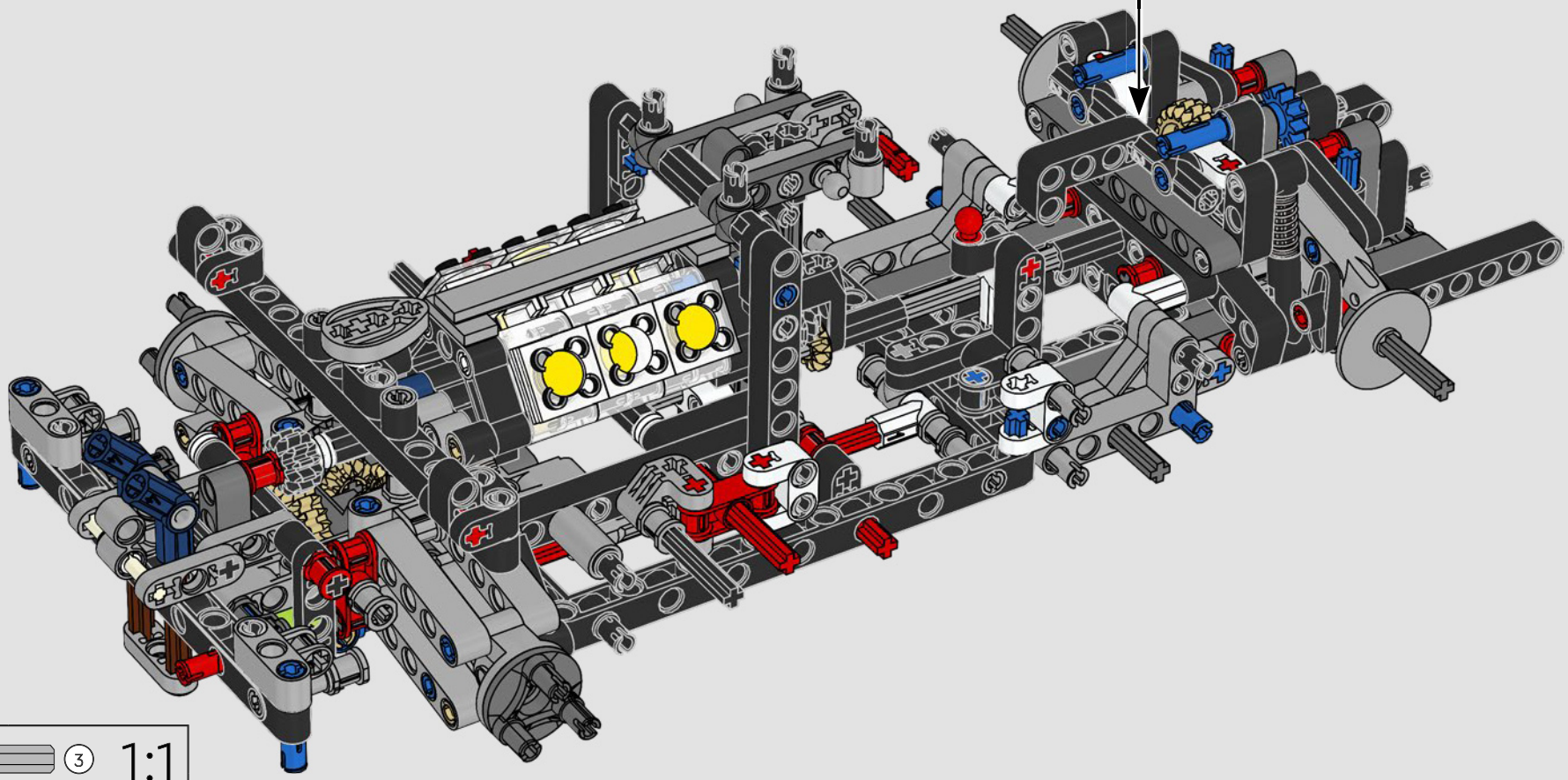

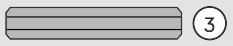

1:1

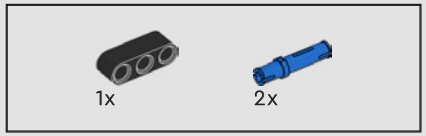

137

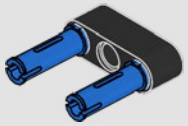

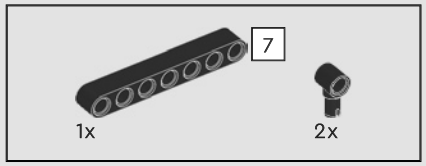

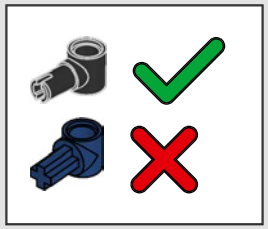

138

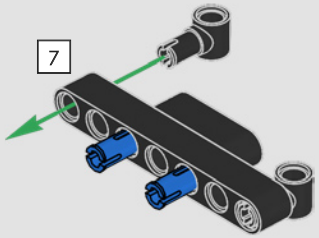

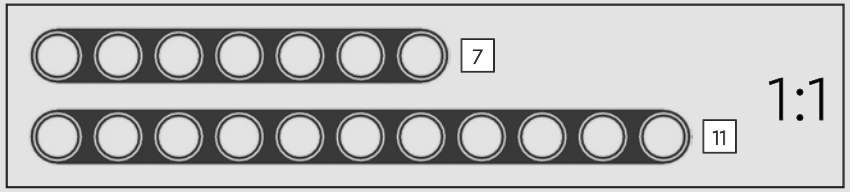

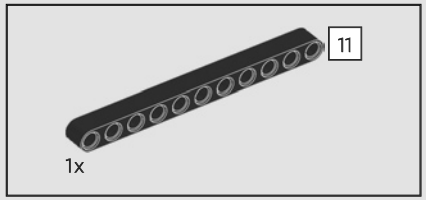

139

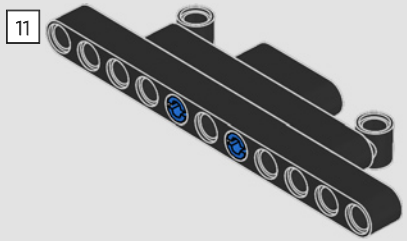

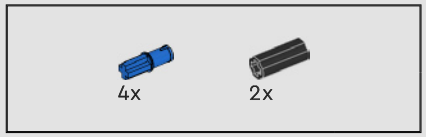

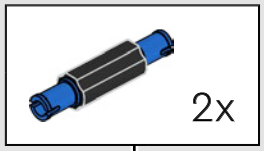

140

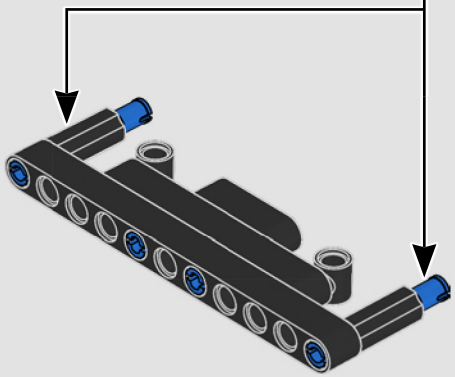

141

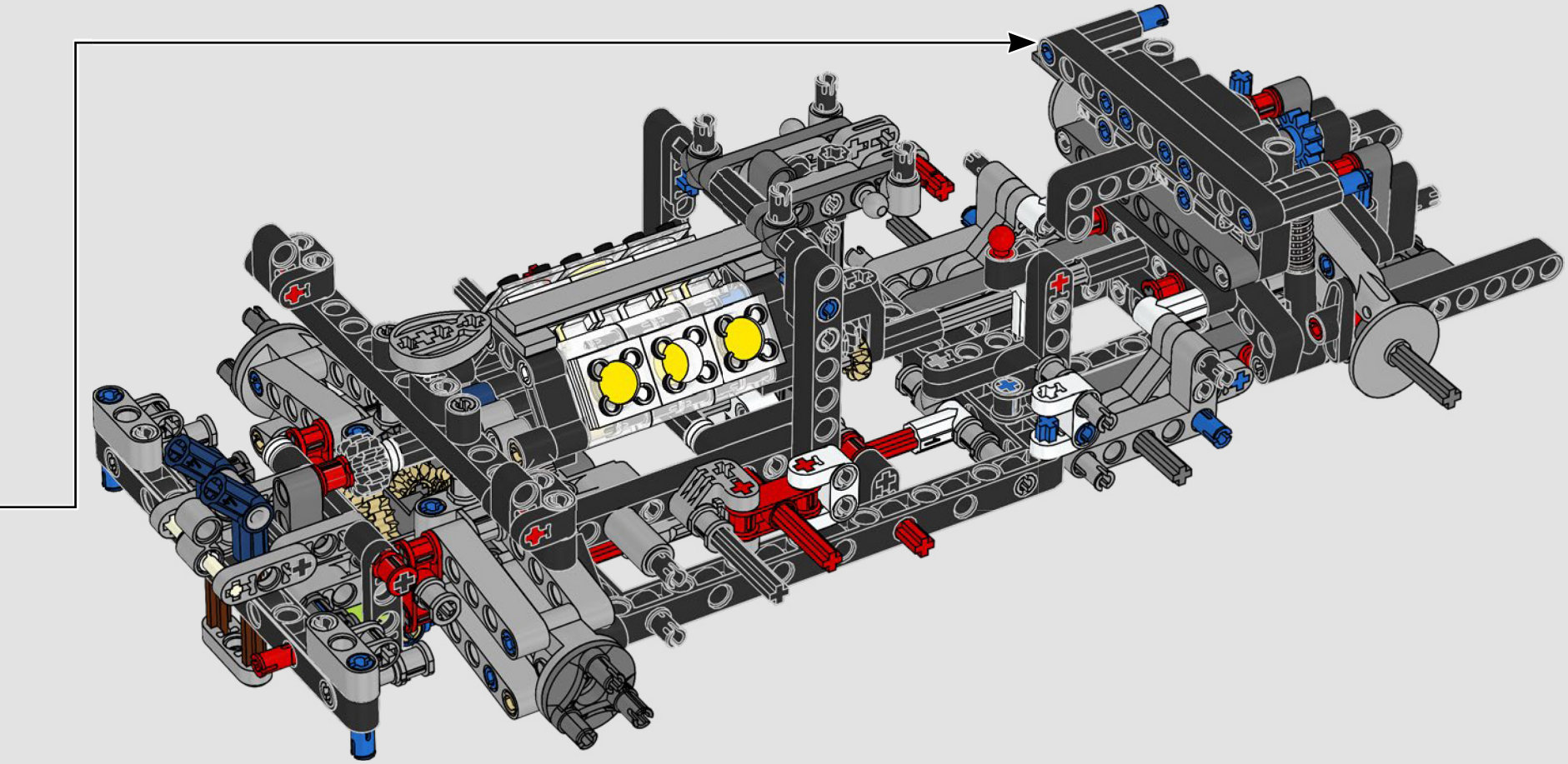

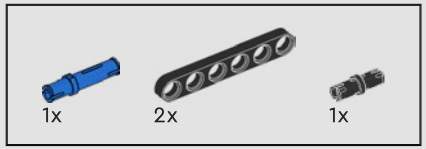

142

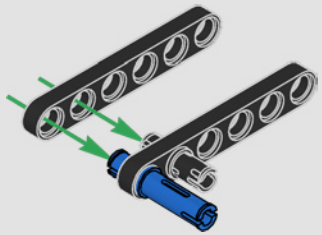

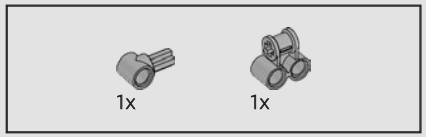

143

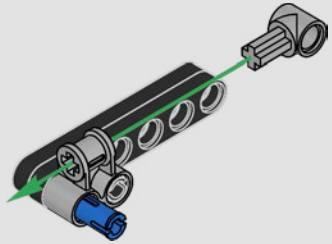

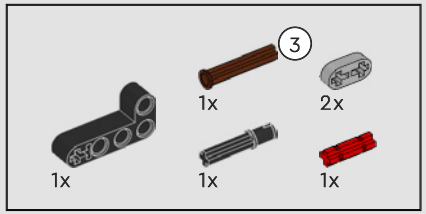

144

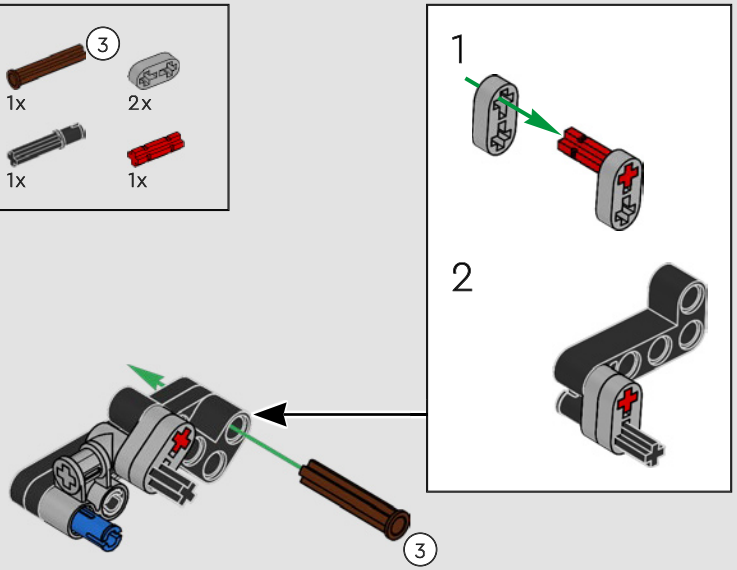

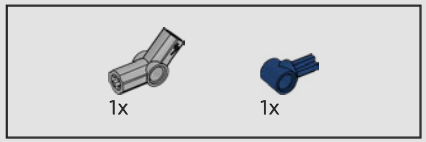

145

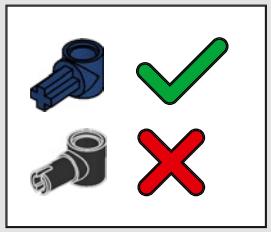

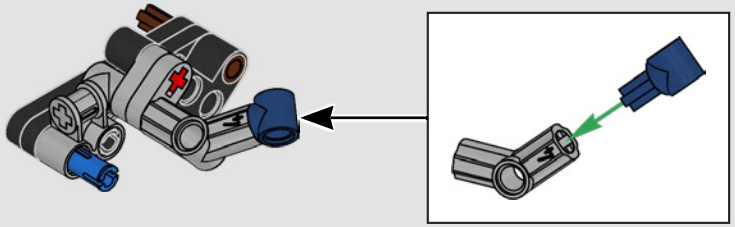

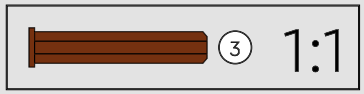

146

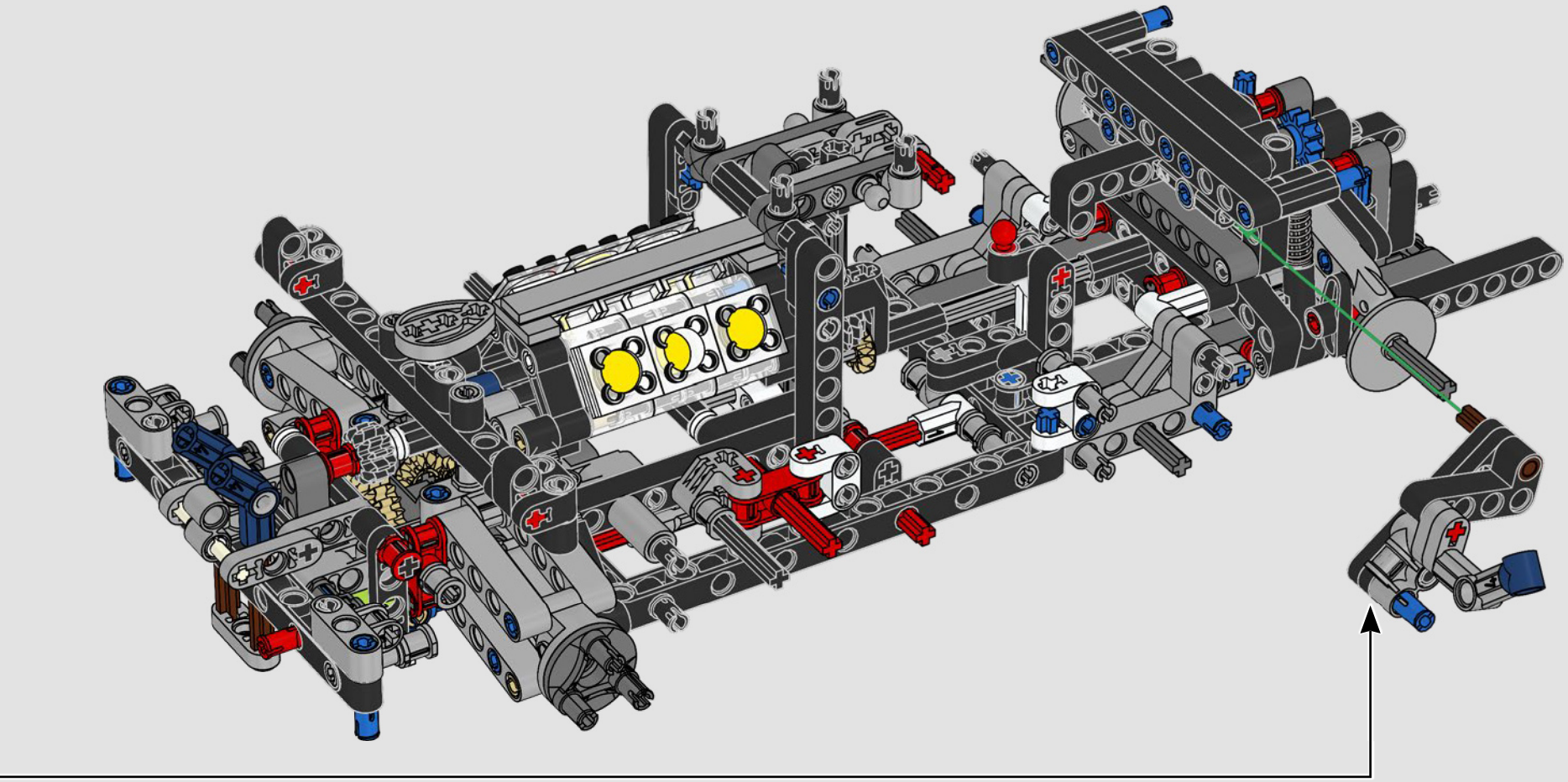

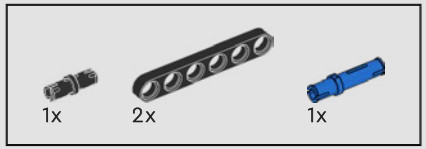

147

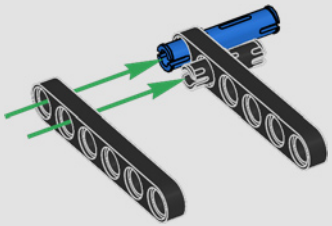

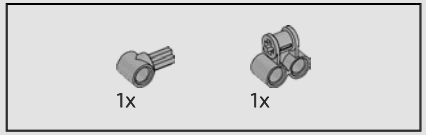

148

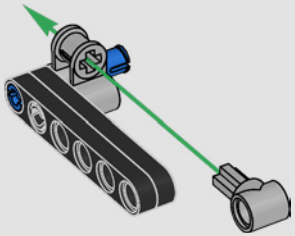

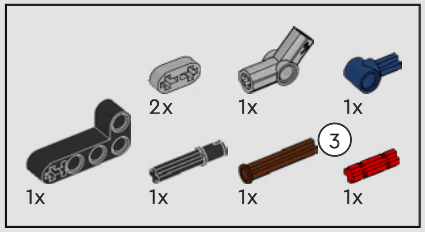

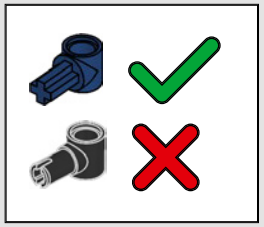

149

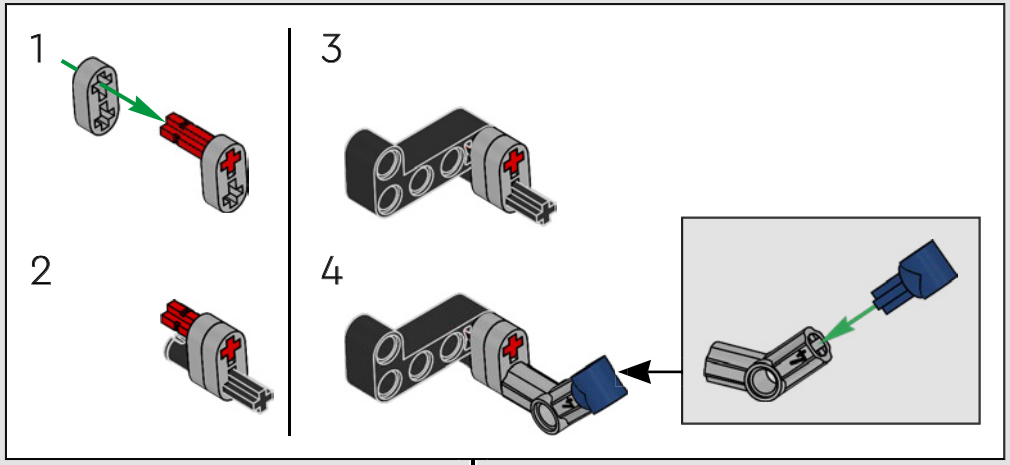

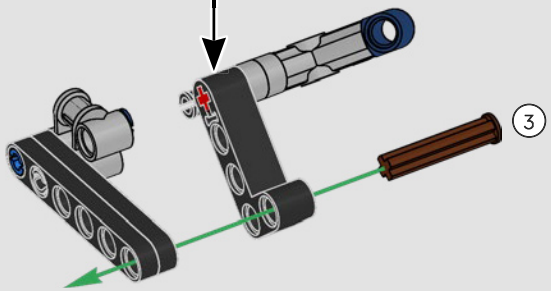

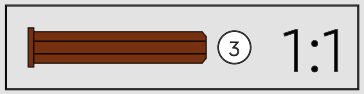

150

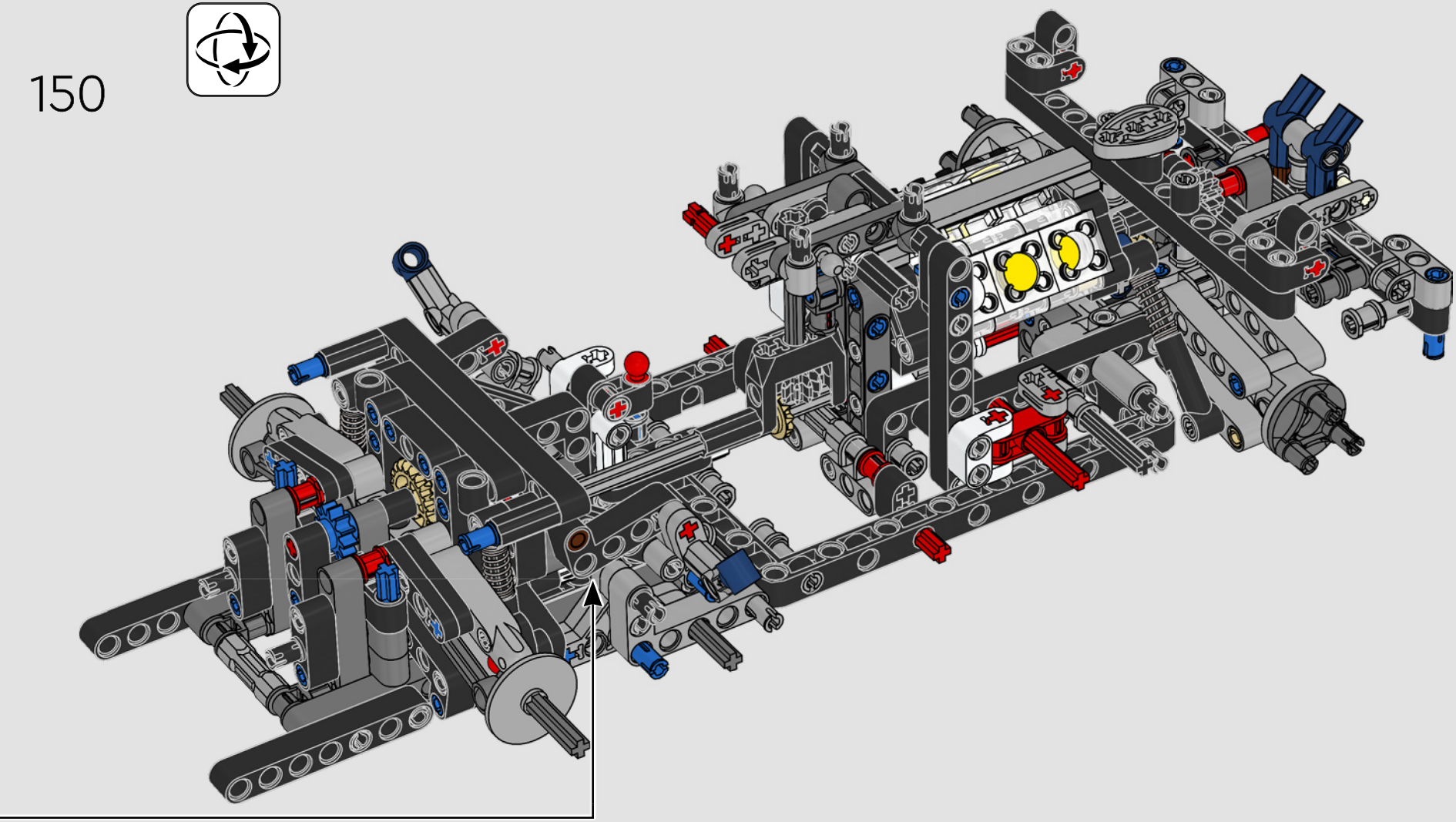

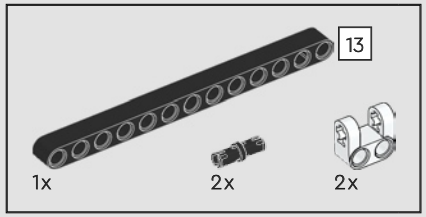

151

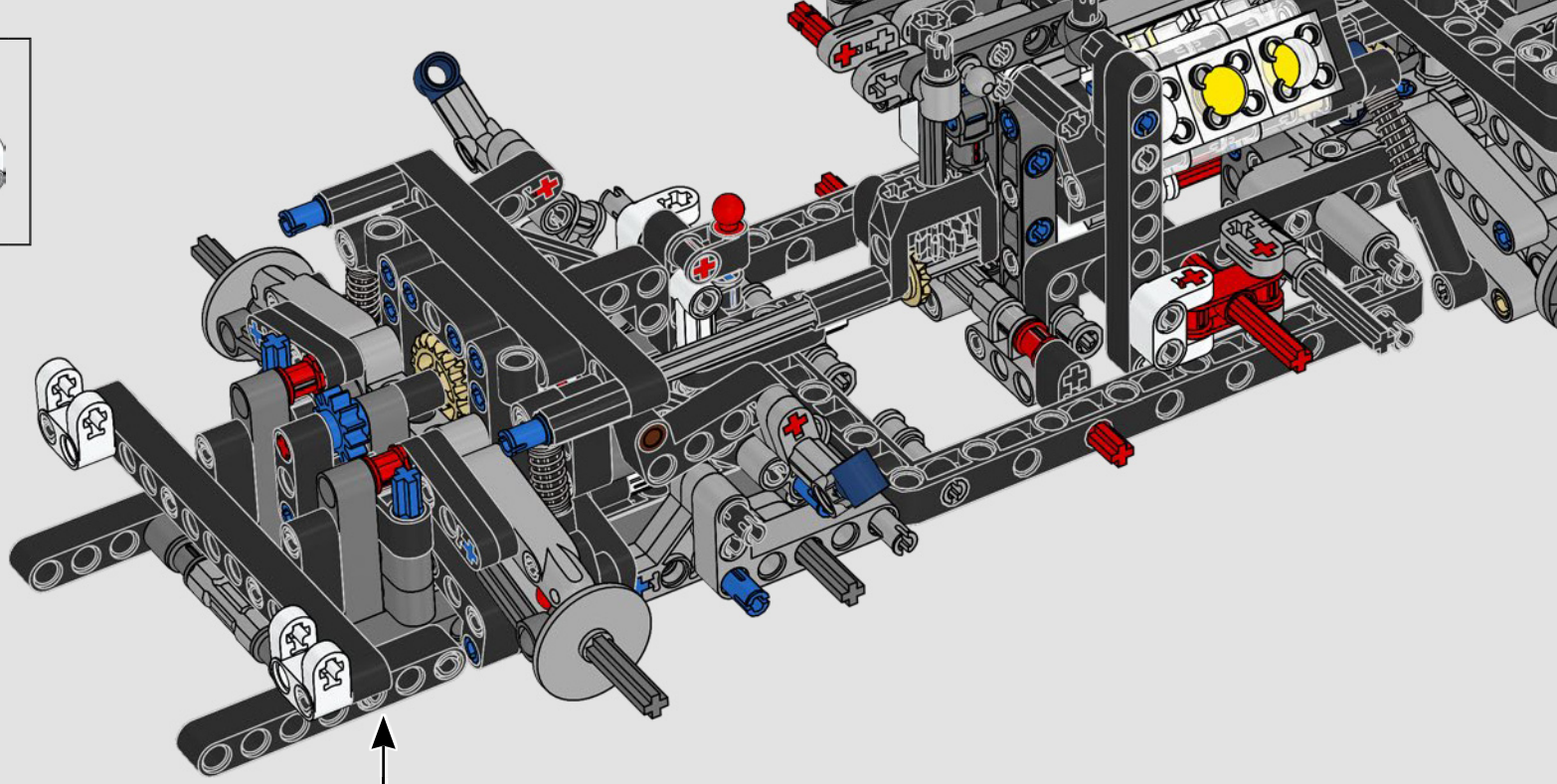

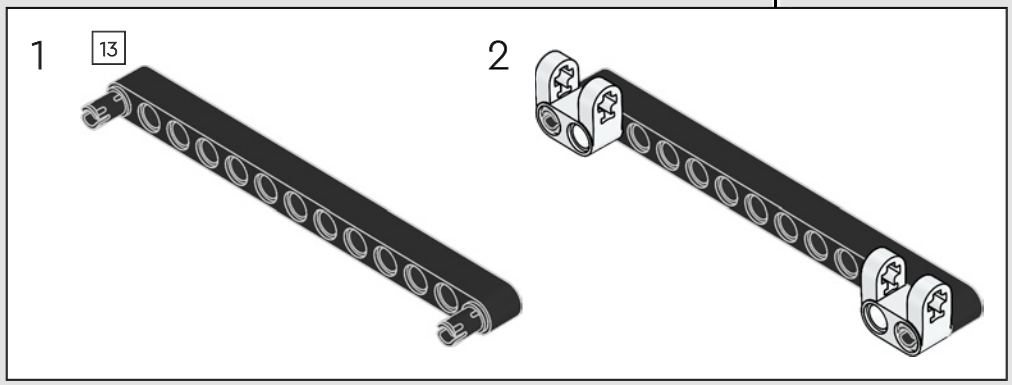

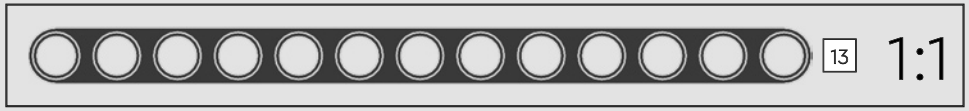

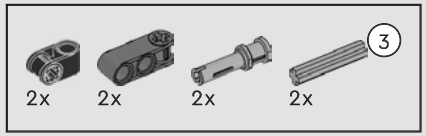

152

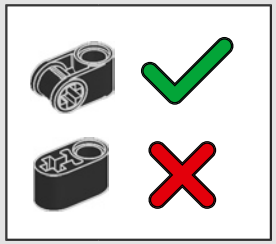

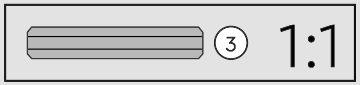

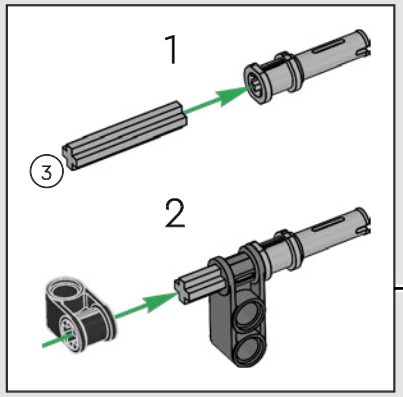

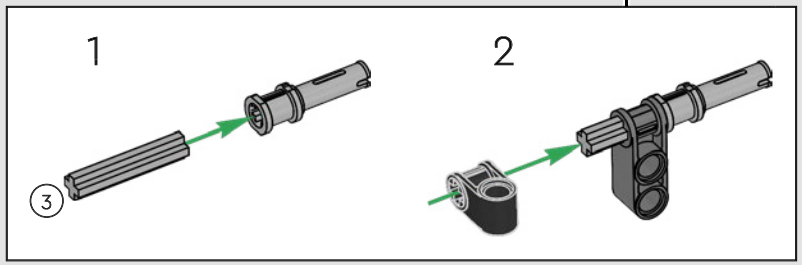

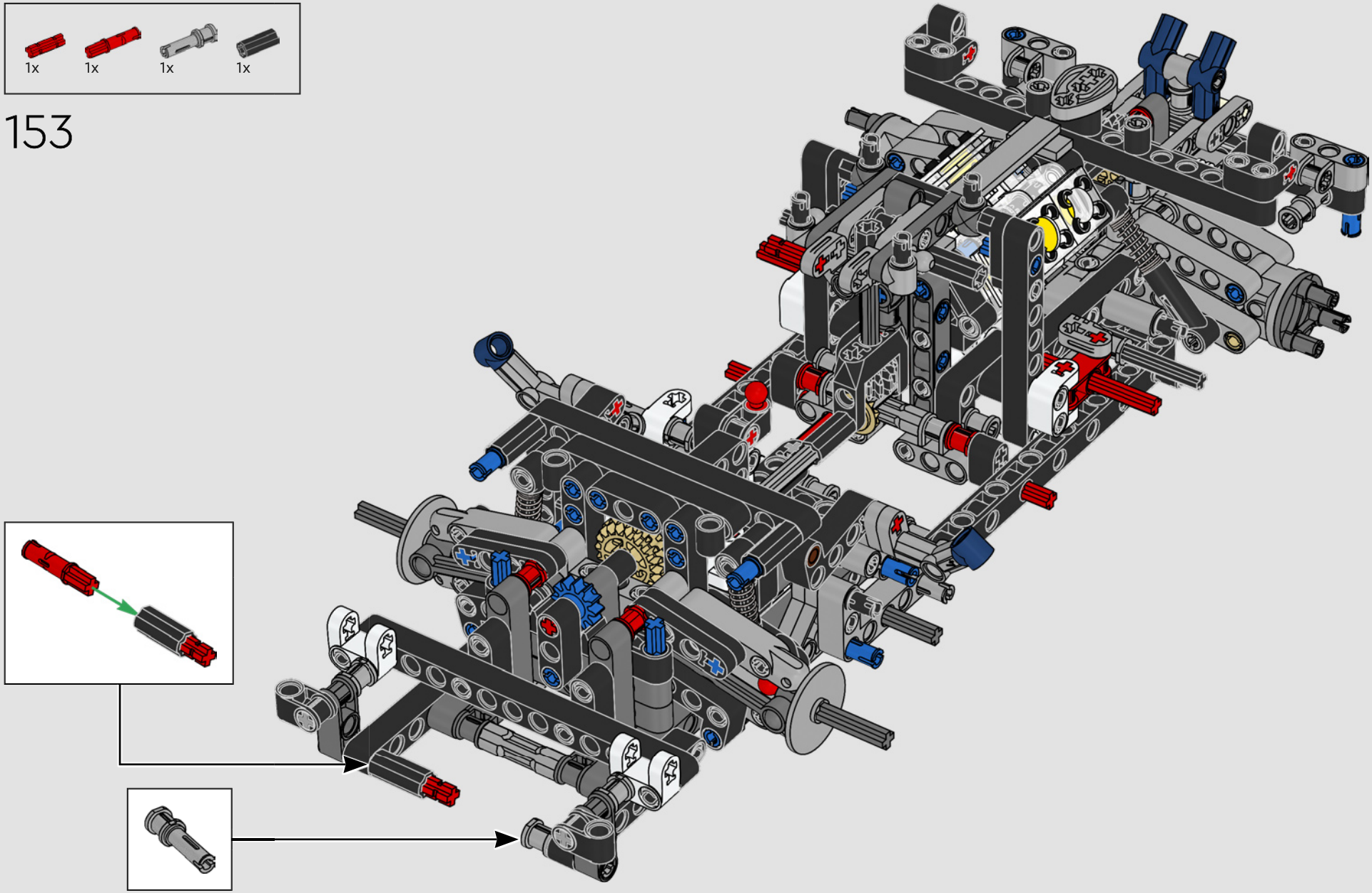

153

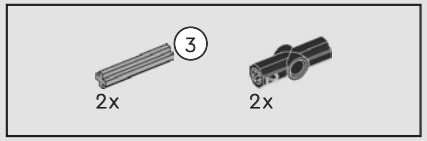

154

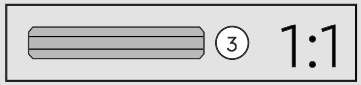

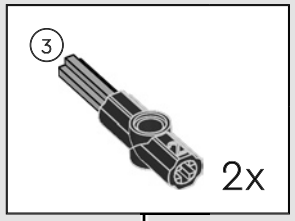

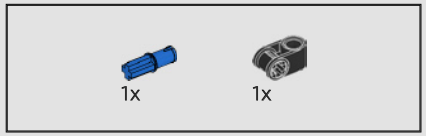

155

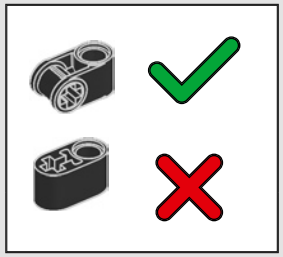

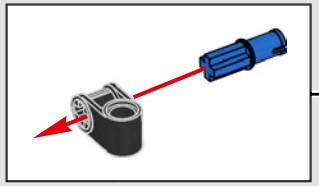

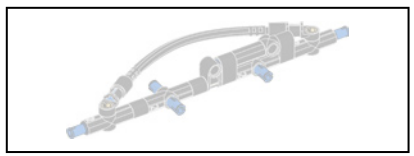

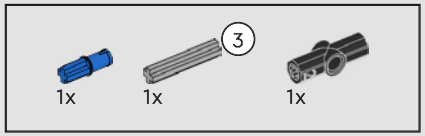

156

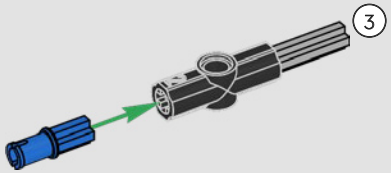

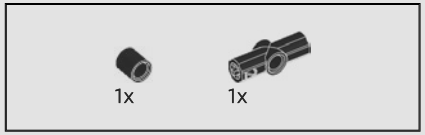

157

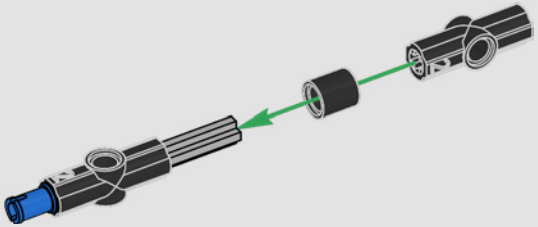

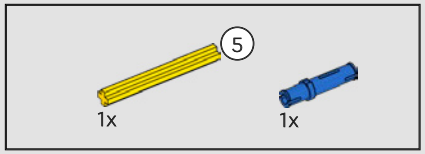

158

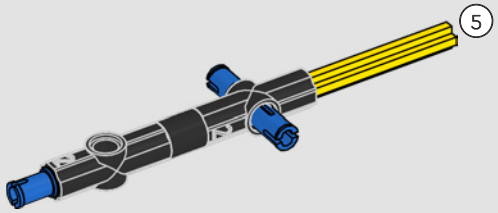

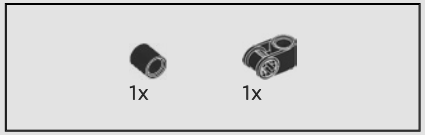

159

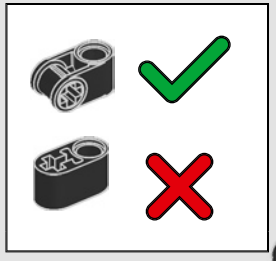

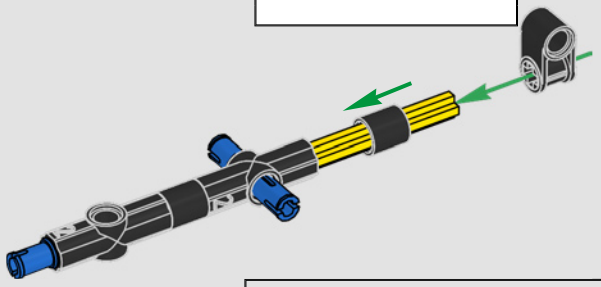

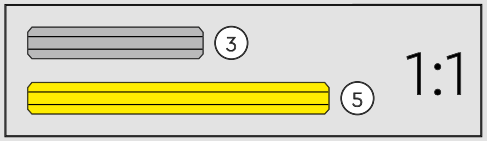

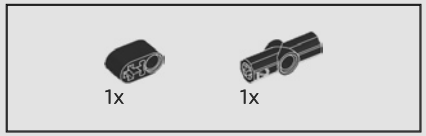

160

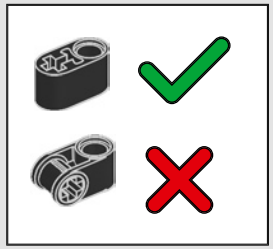

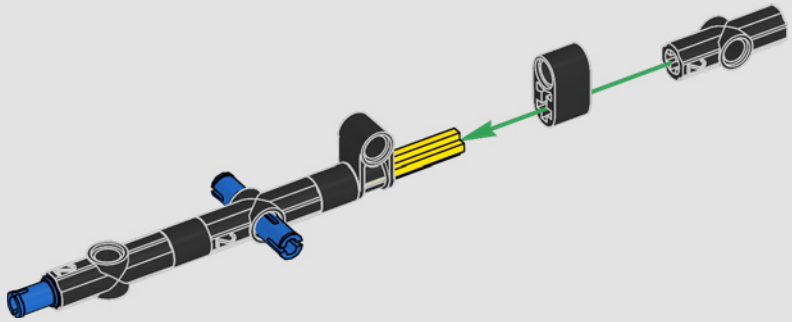

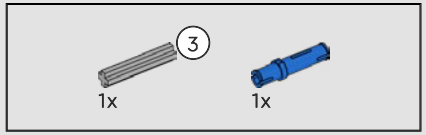

161

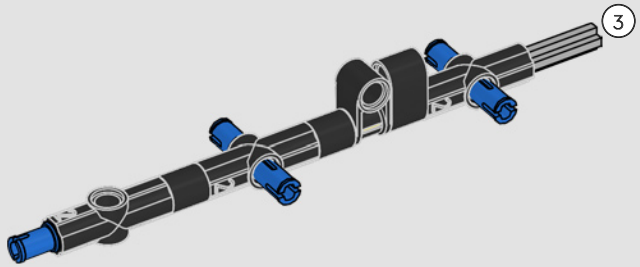

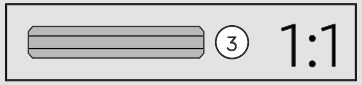

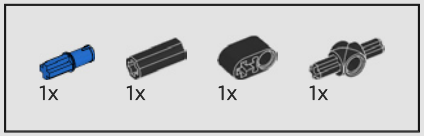

162

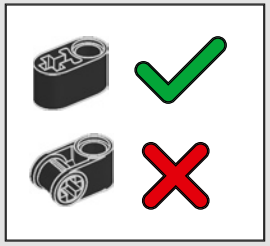

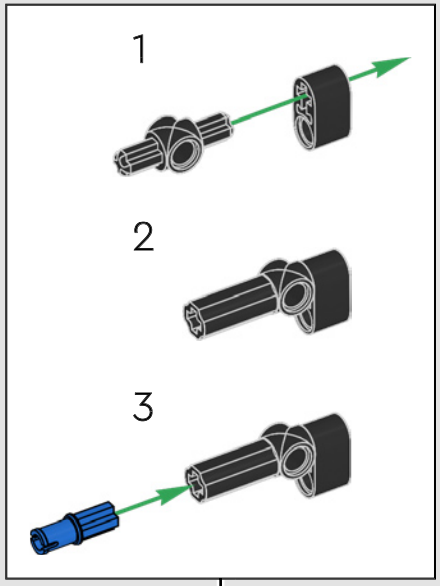

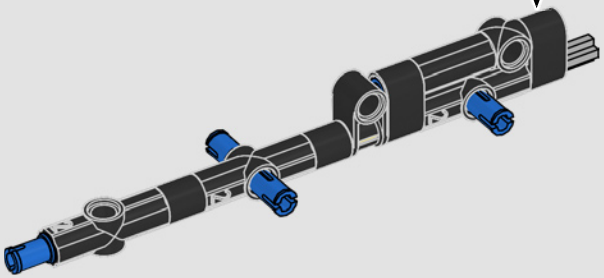

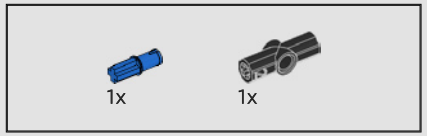

163

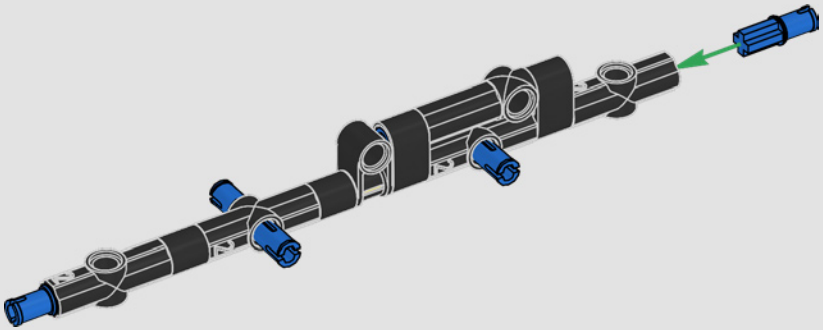

164

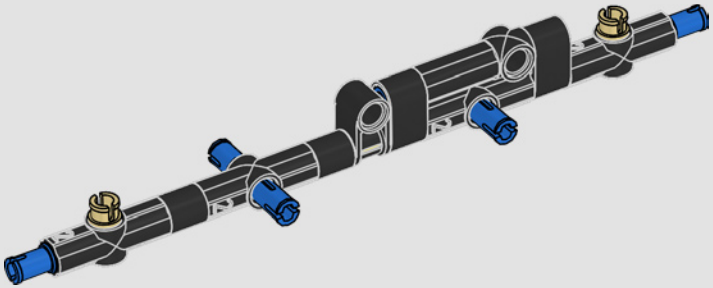

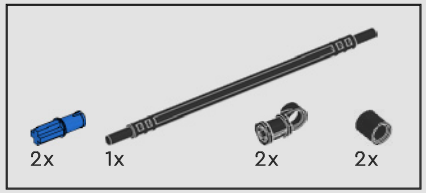

165

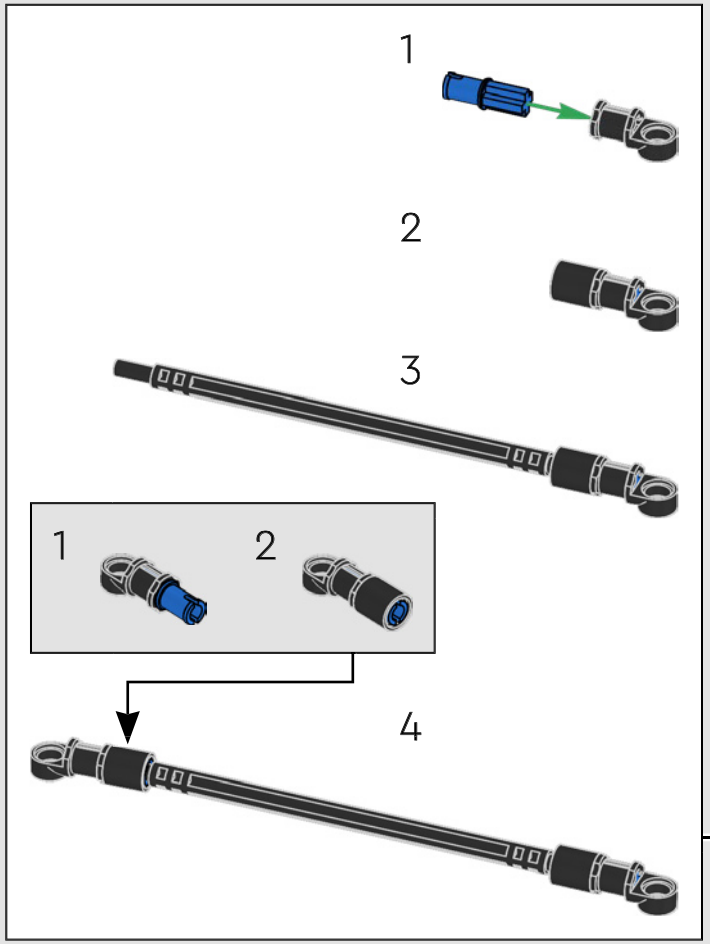

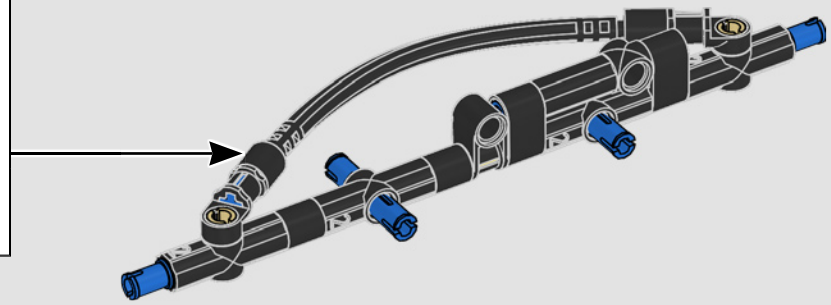

166

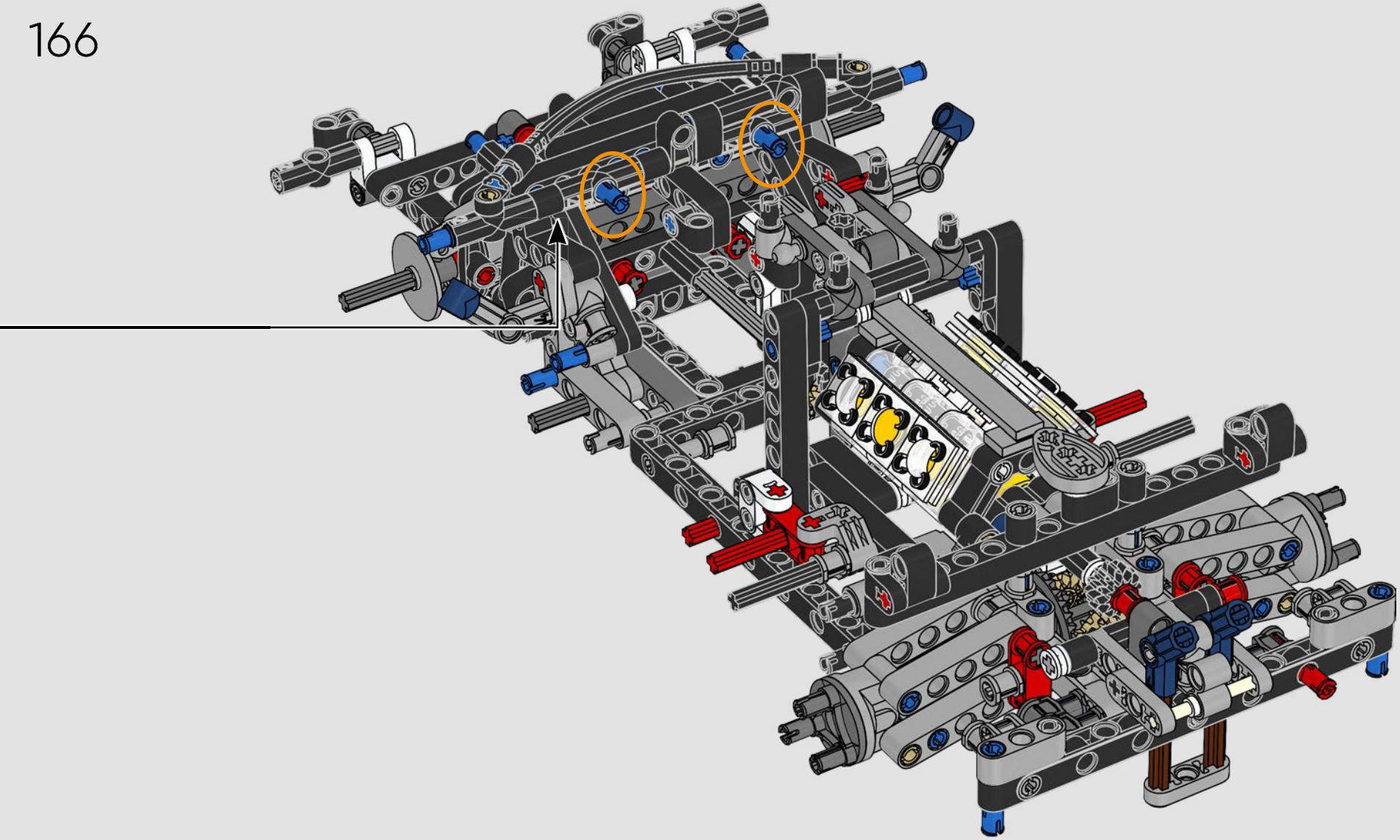

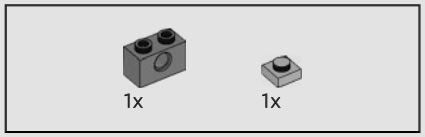

167

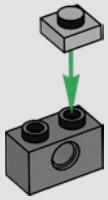

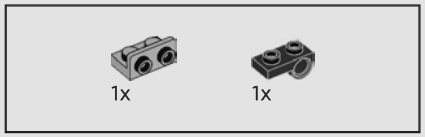

168

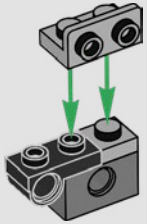

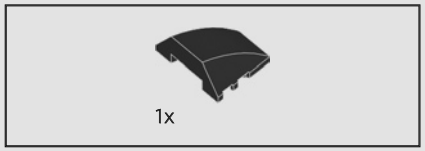

169

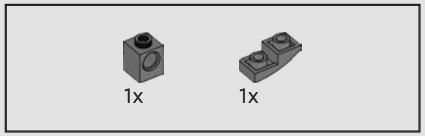

170

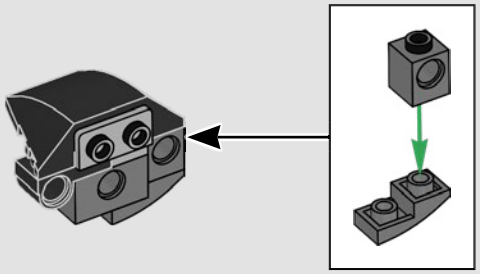

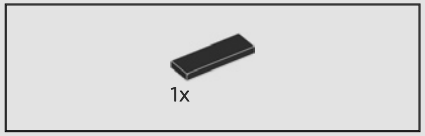

171

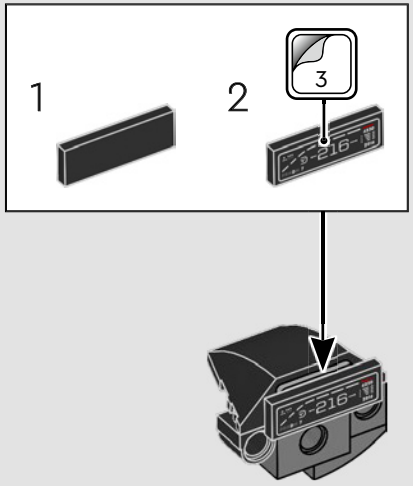

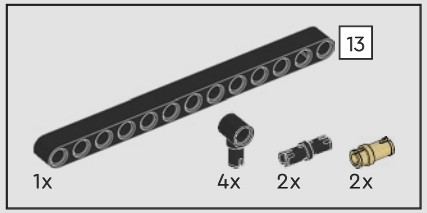

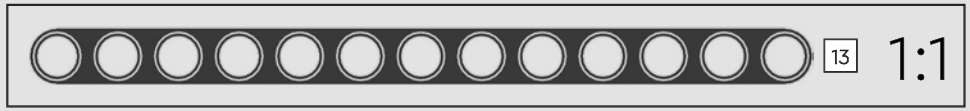

172

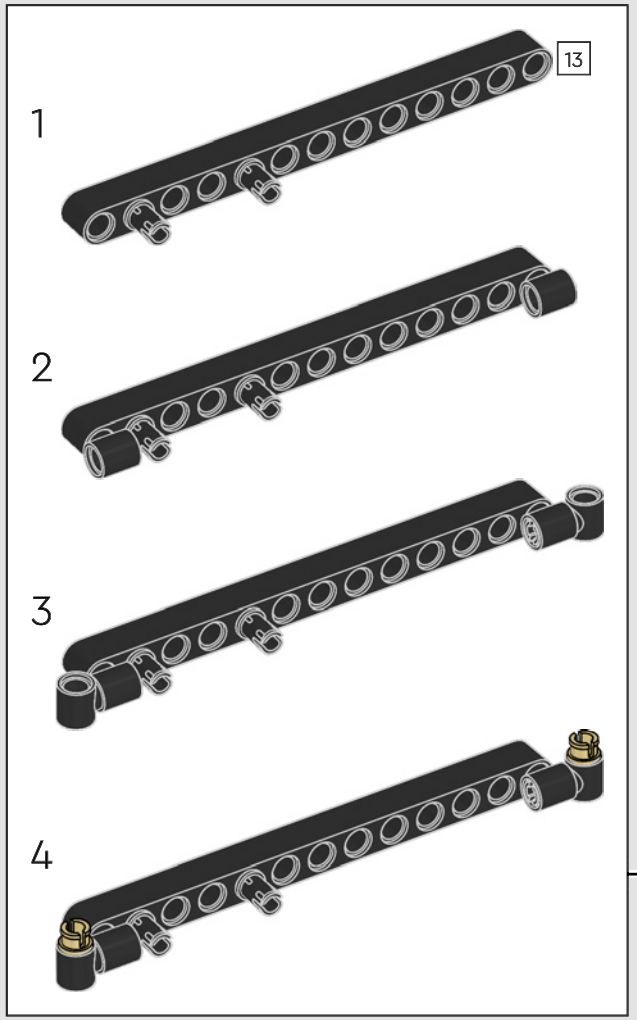

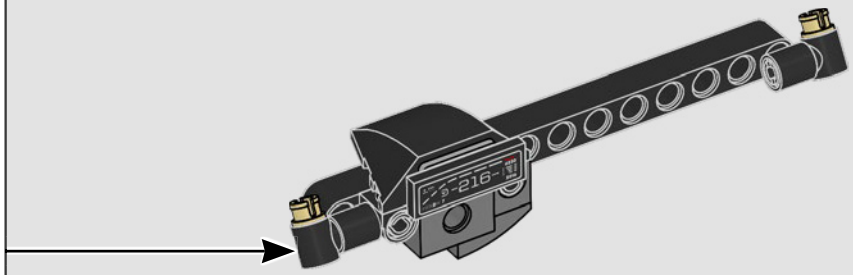

173

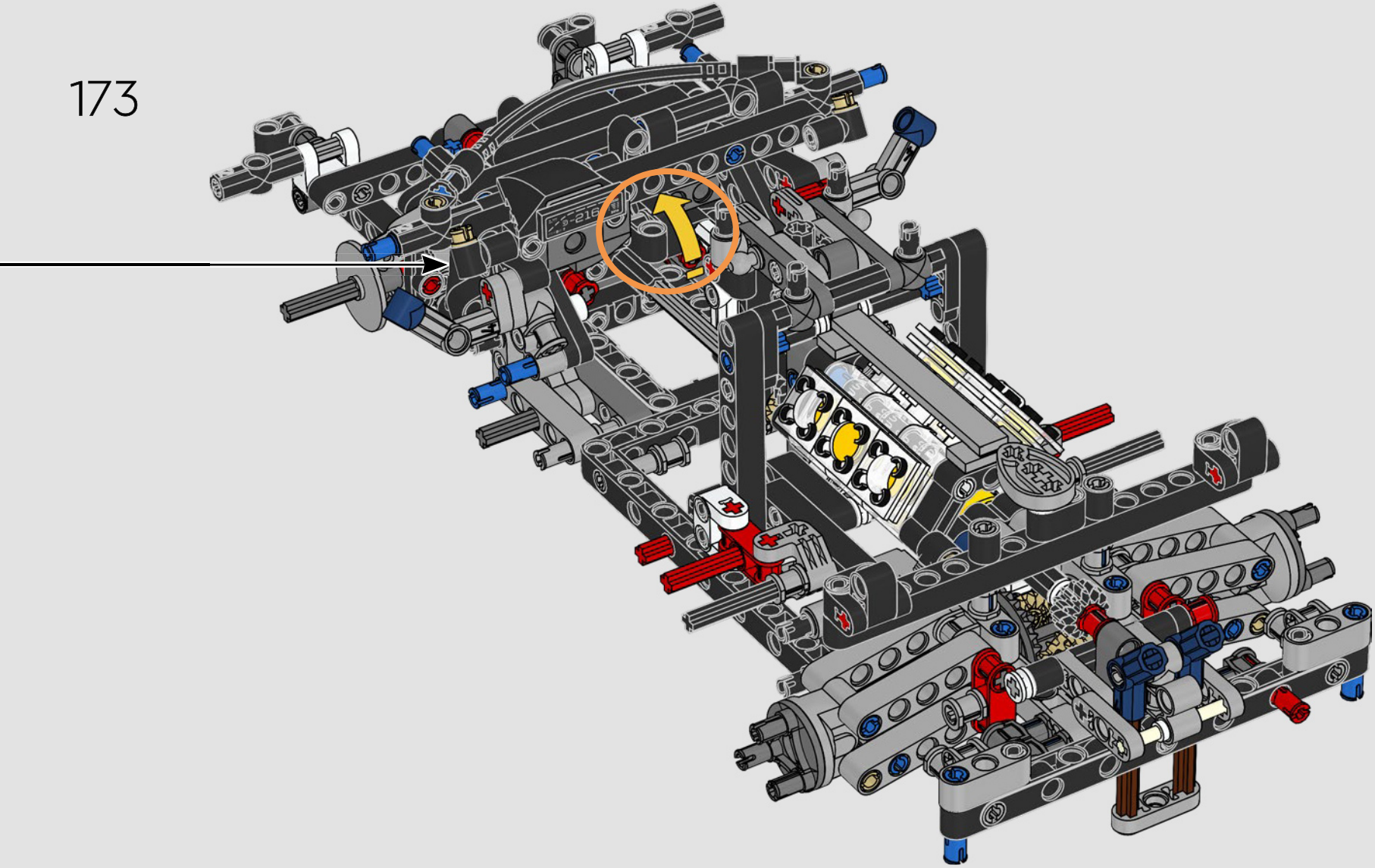

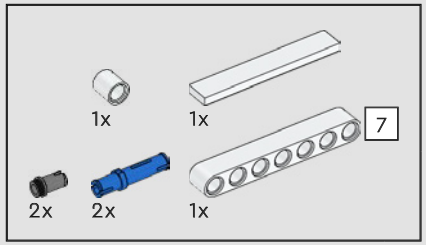

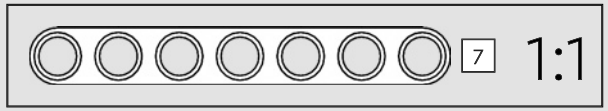

174

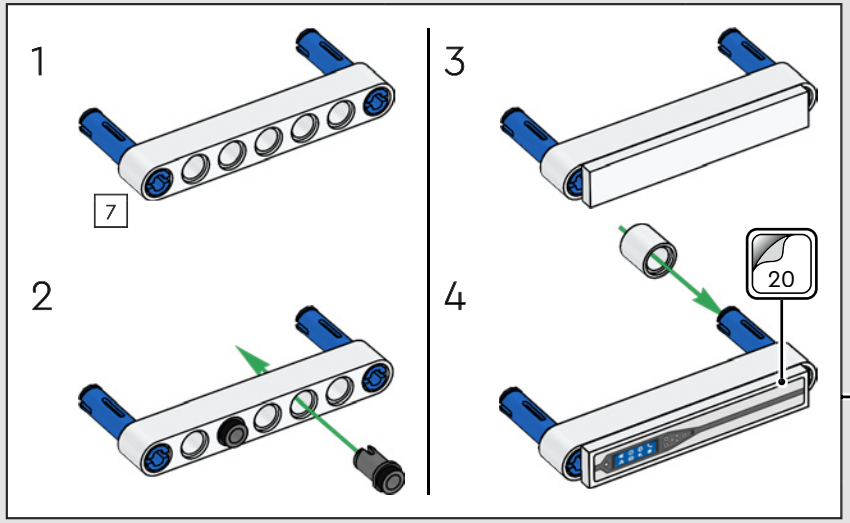

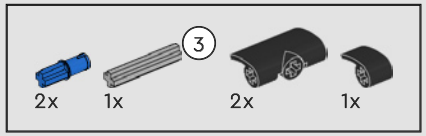

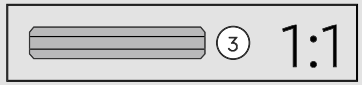

175

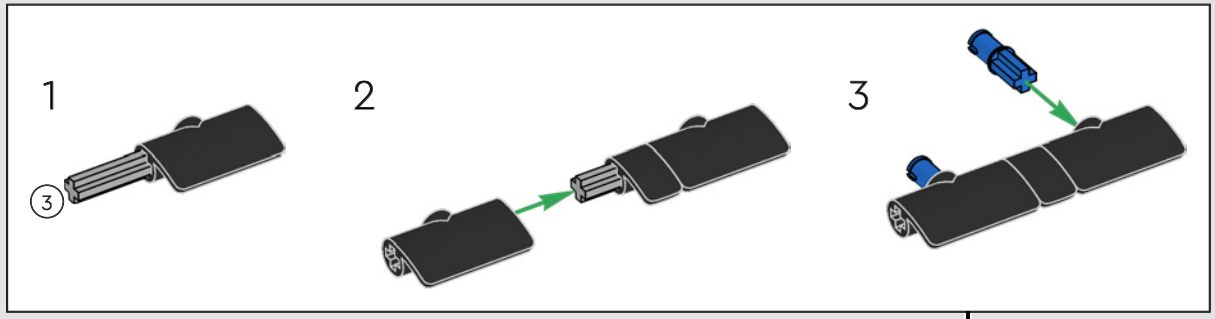

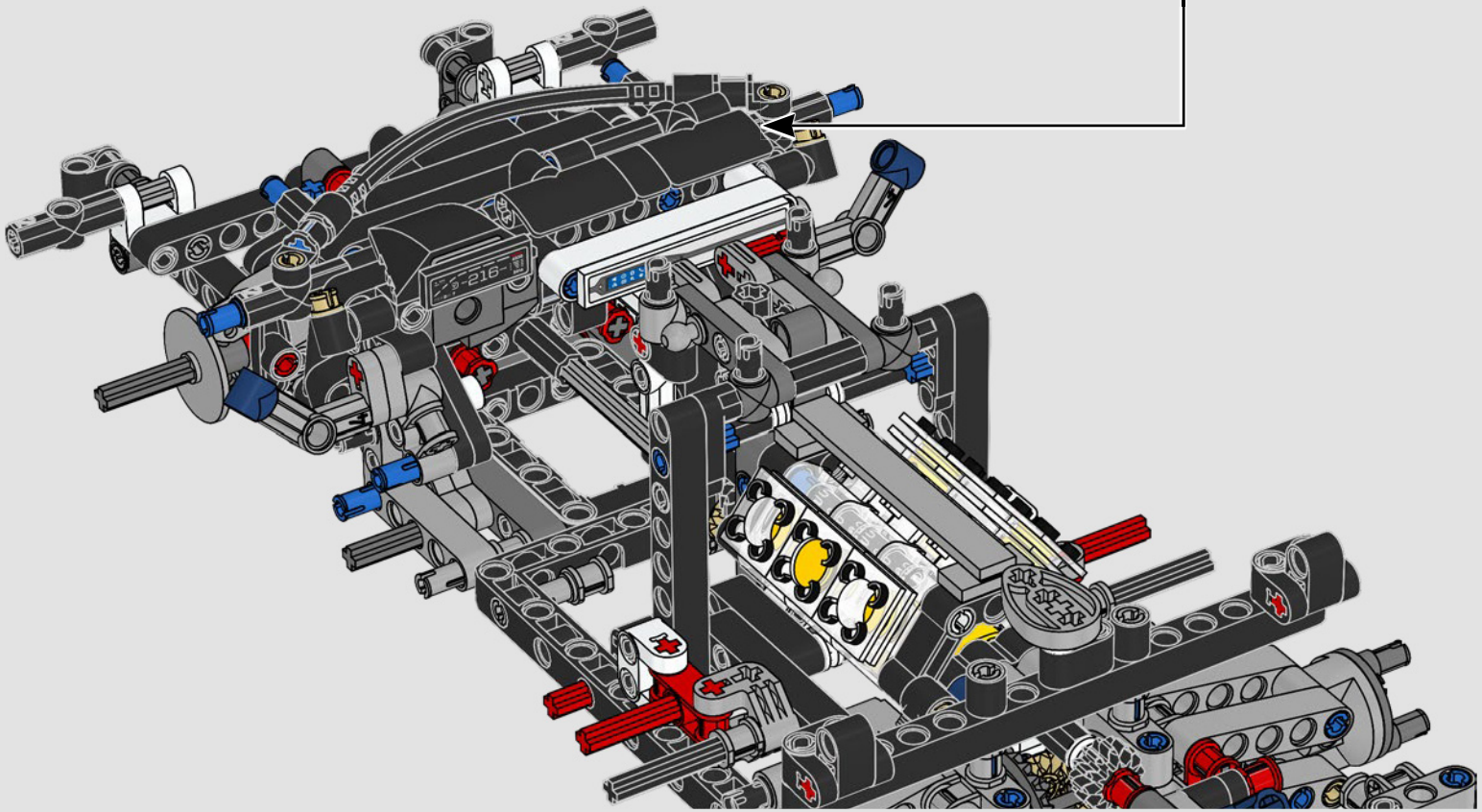

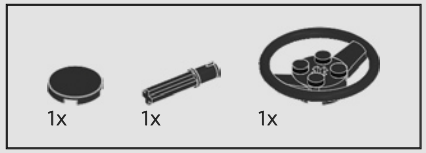

176

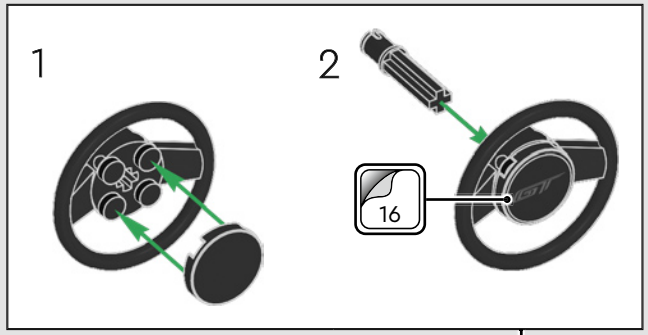

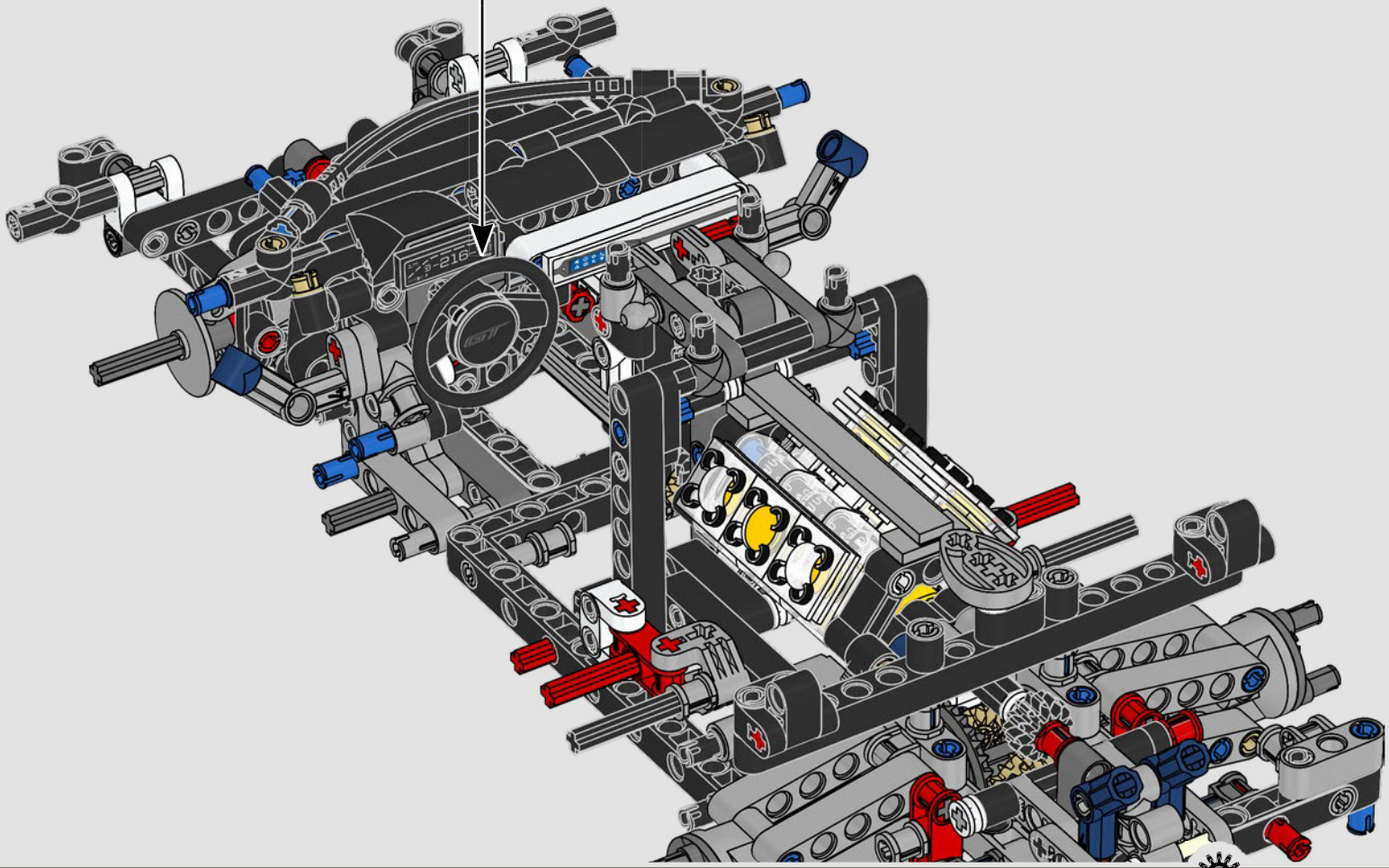

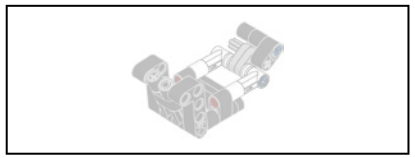

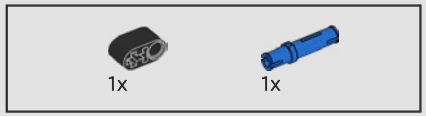

177

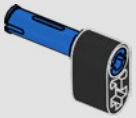

178

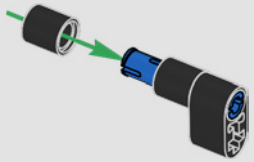

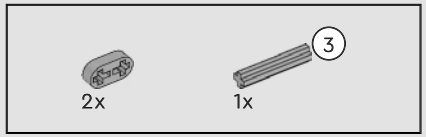

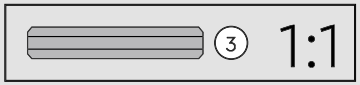

179

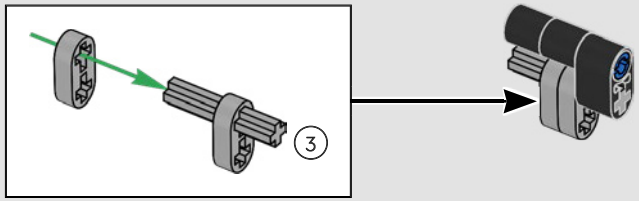

180

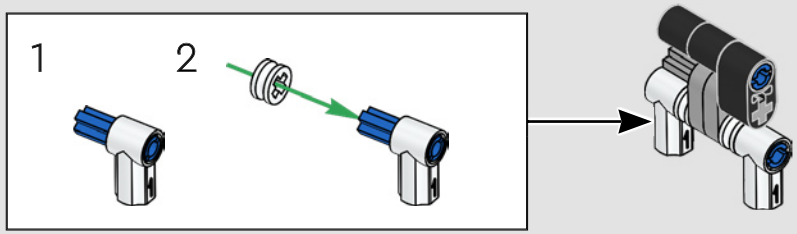

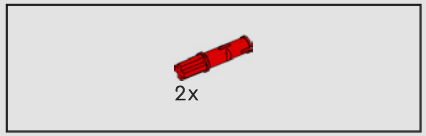

181

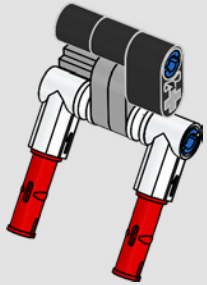

182

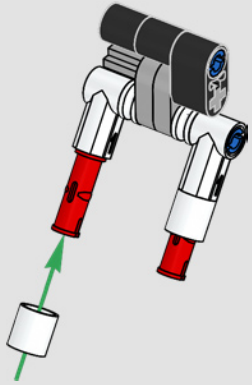

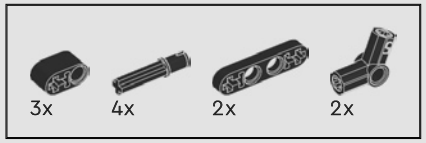

183

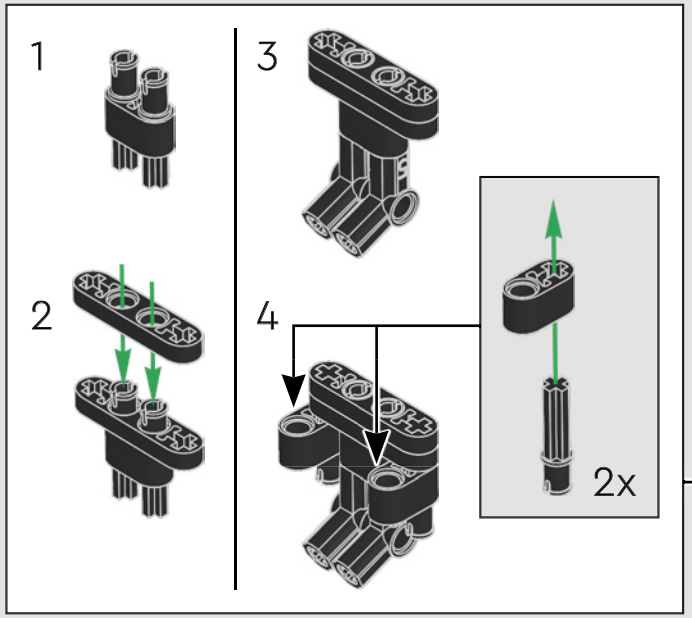

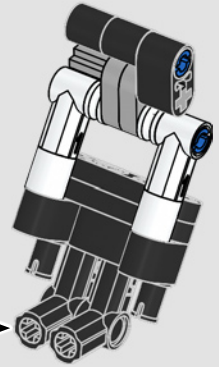

184

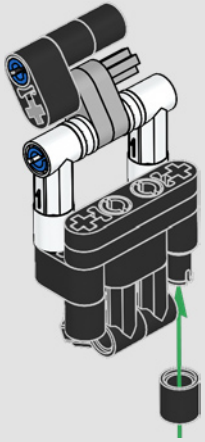

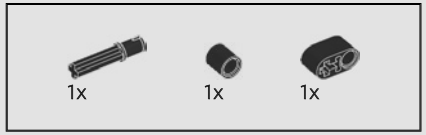

185

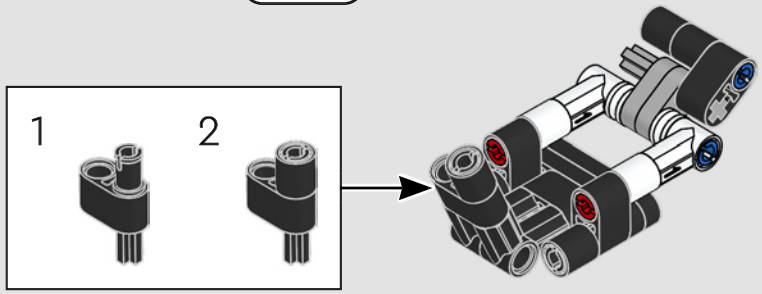

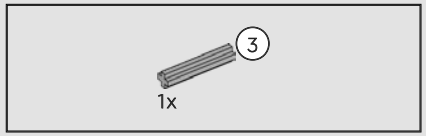

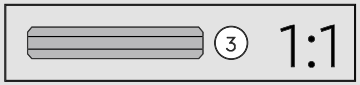

186

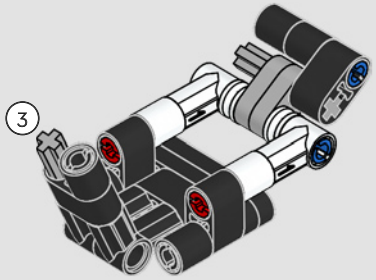

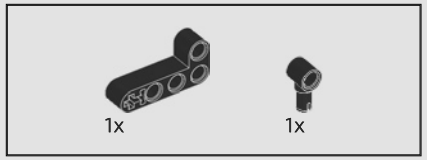

187

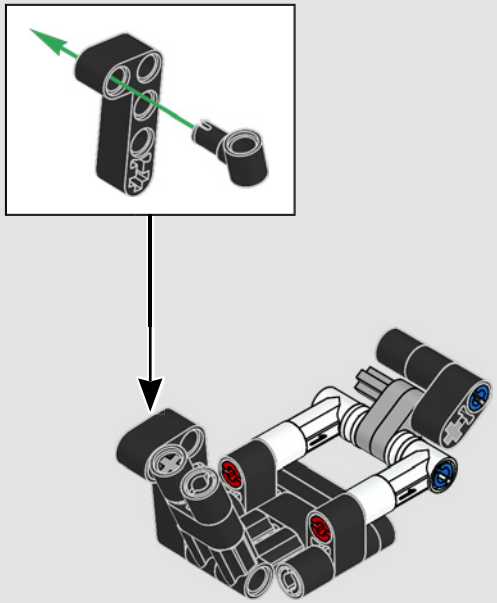

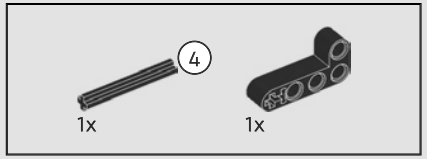

188

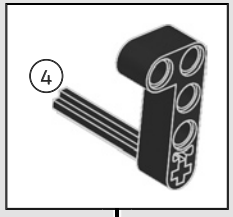

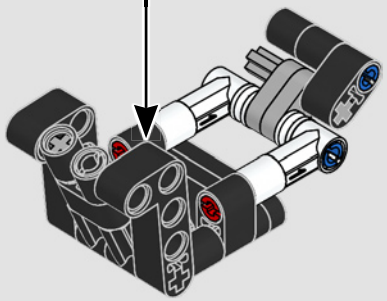

189

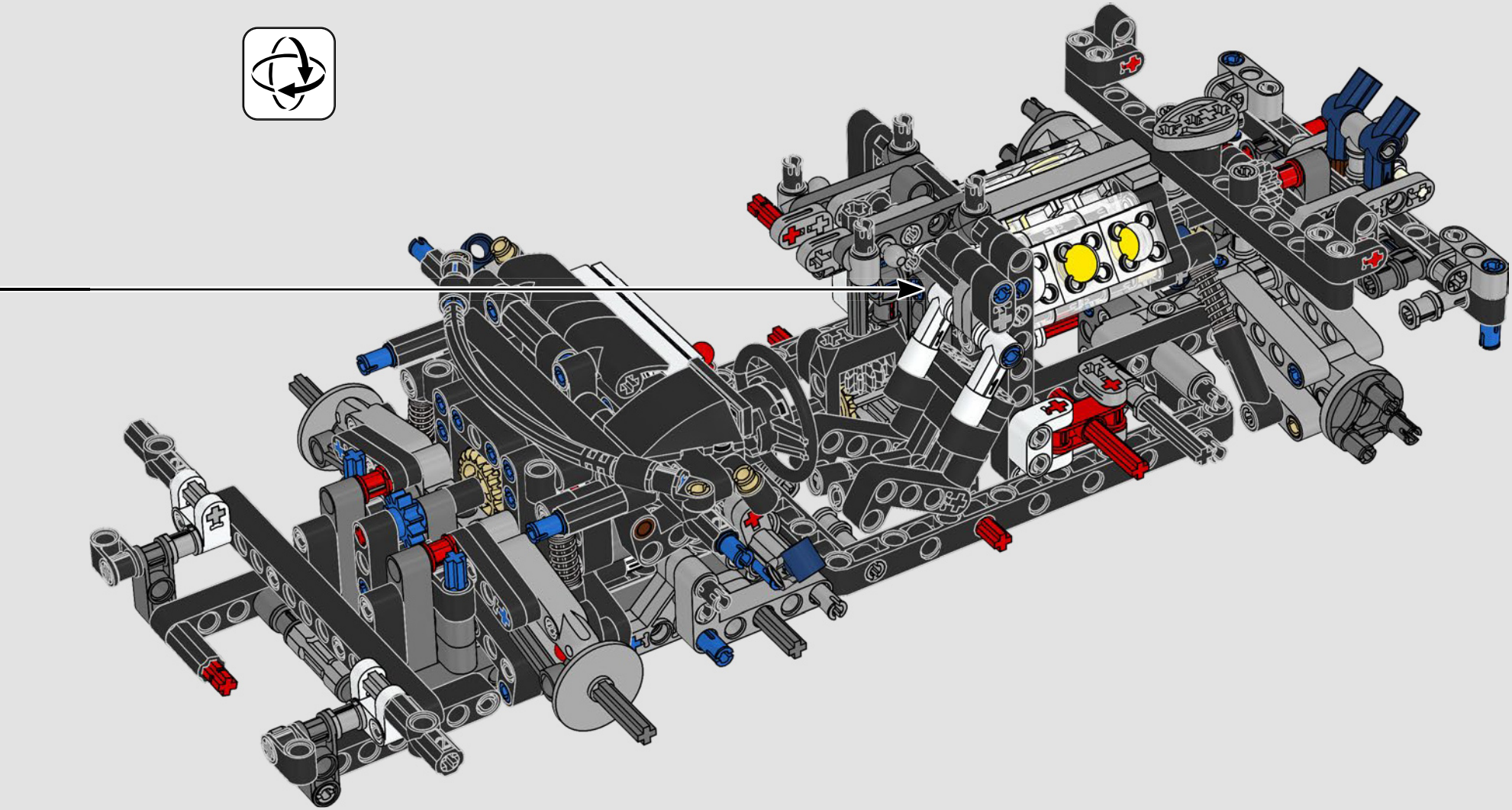

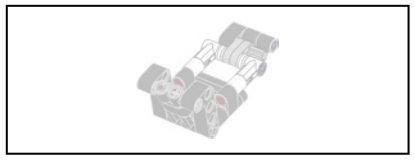

190

191

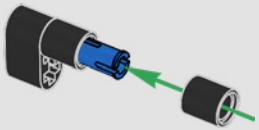

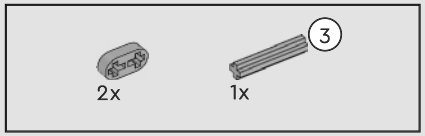

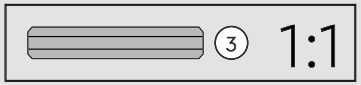

192

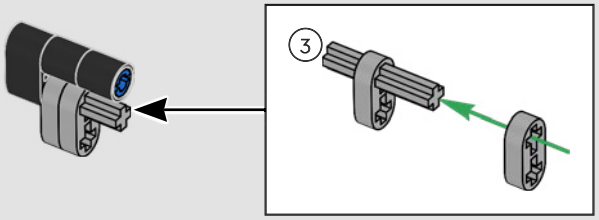

193

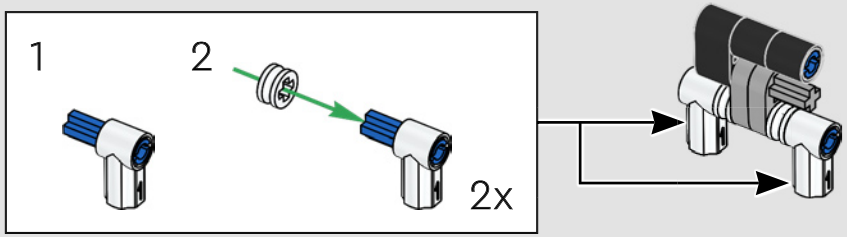

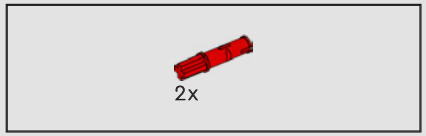

194

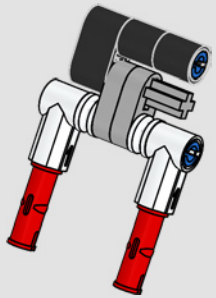

195

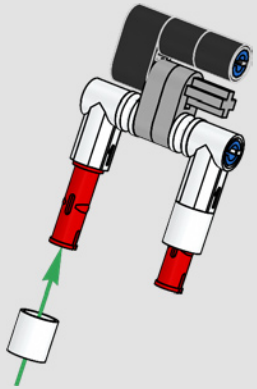

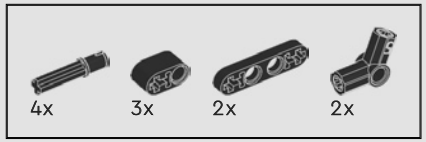

196

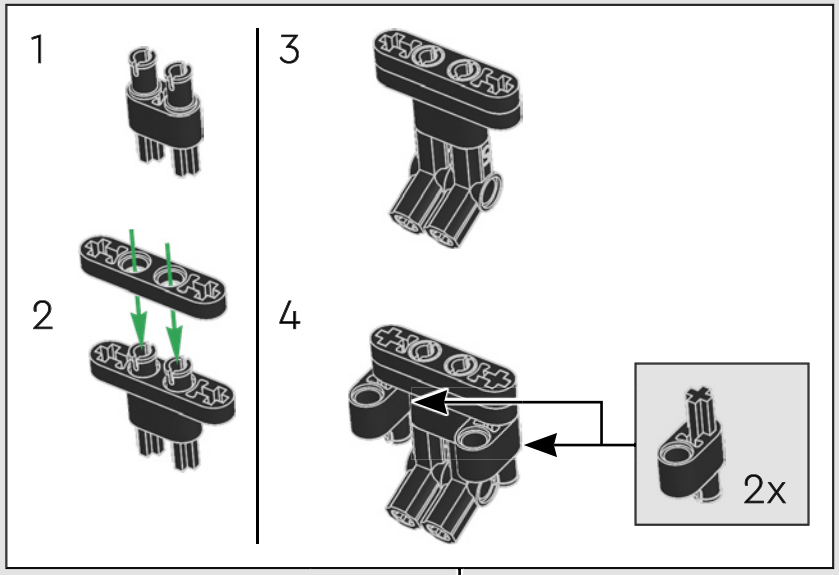

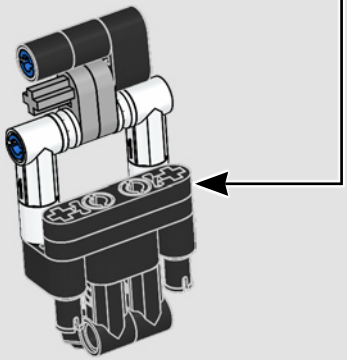

197

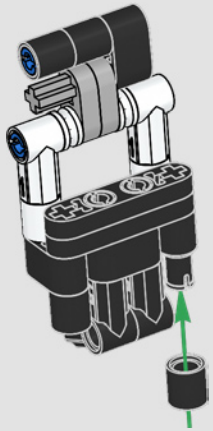

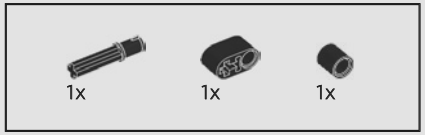

198

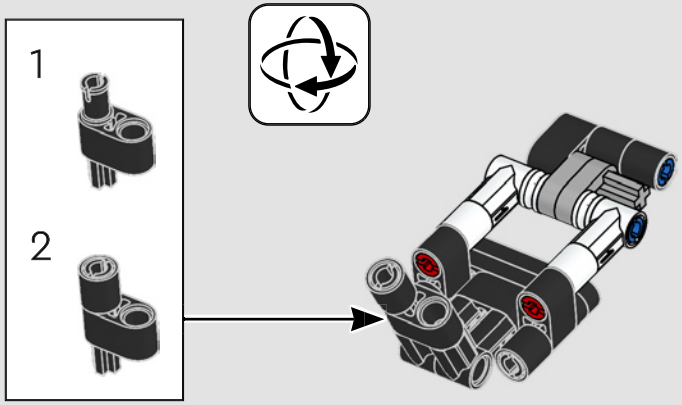

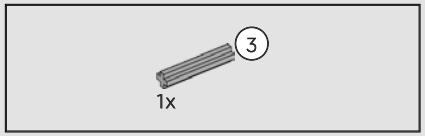

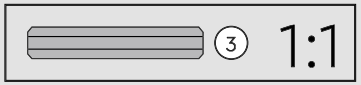

199

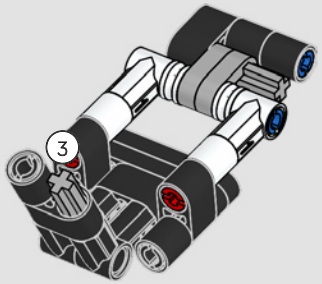

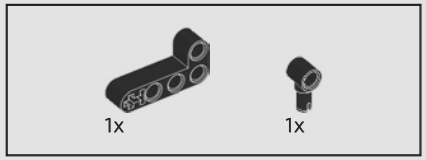

200

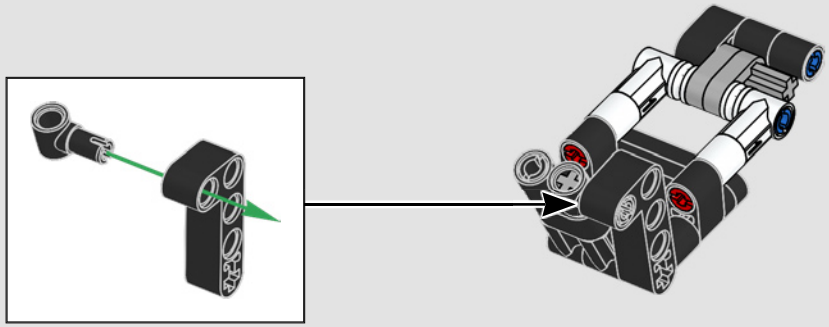

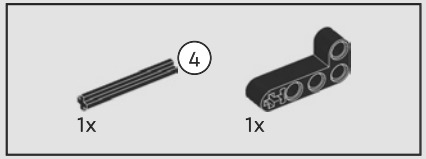

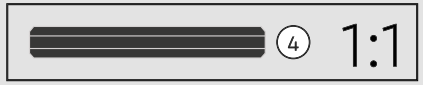

201

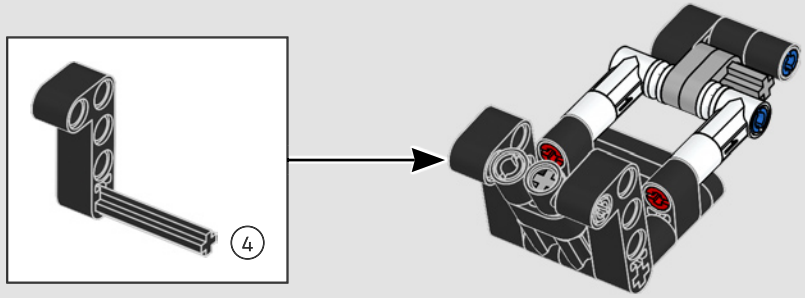

202

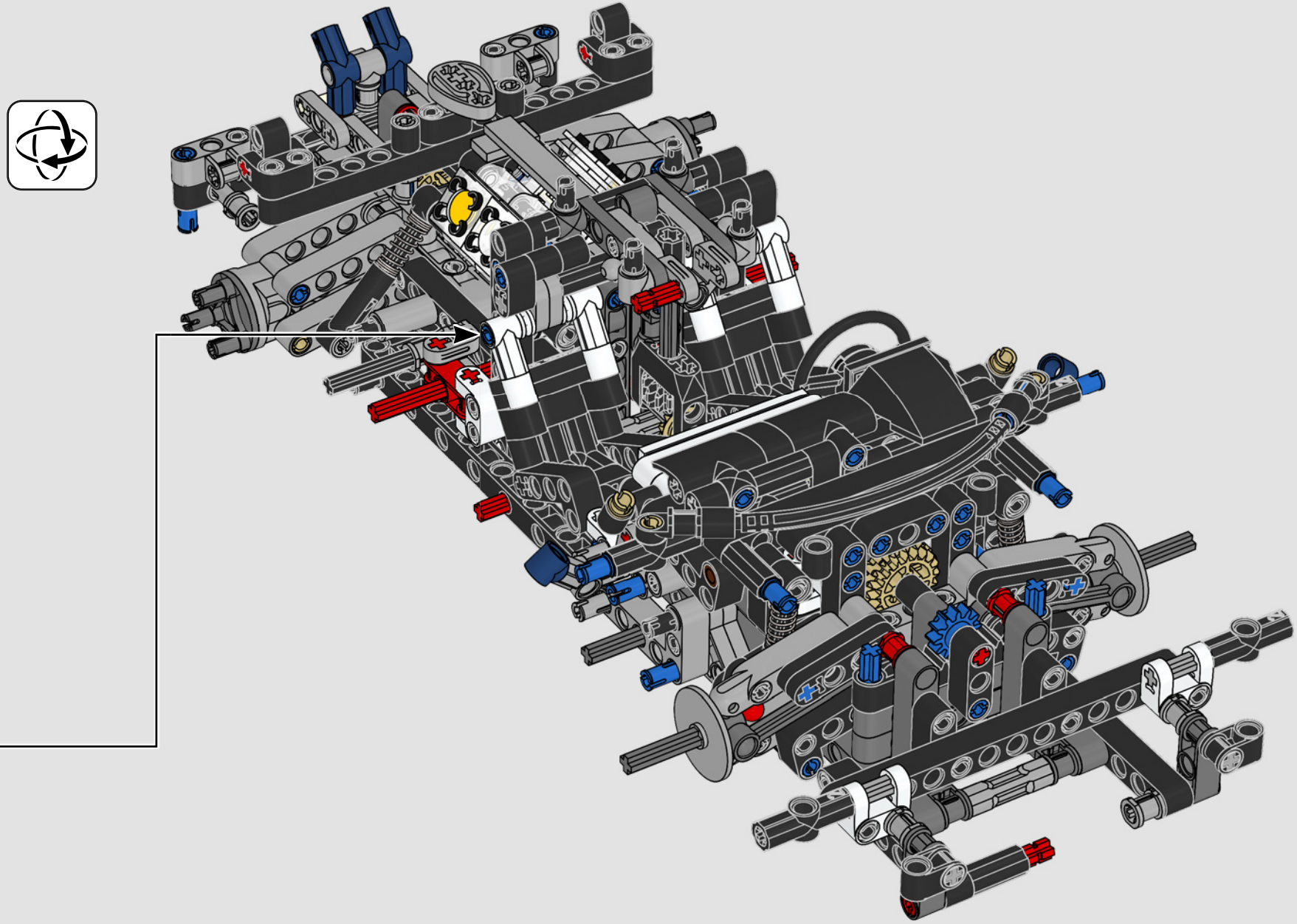

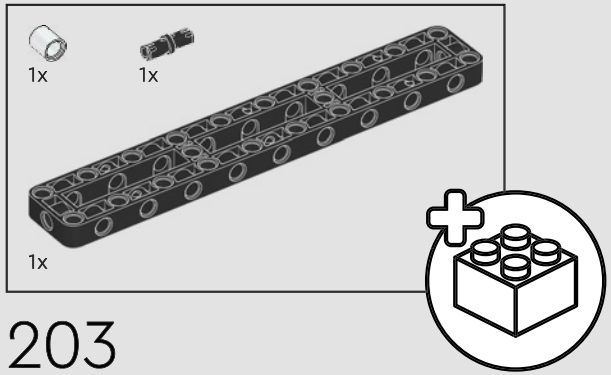

203

1

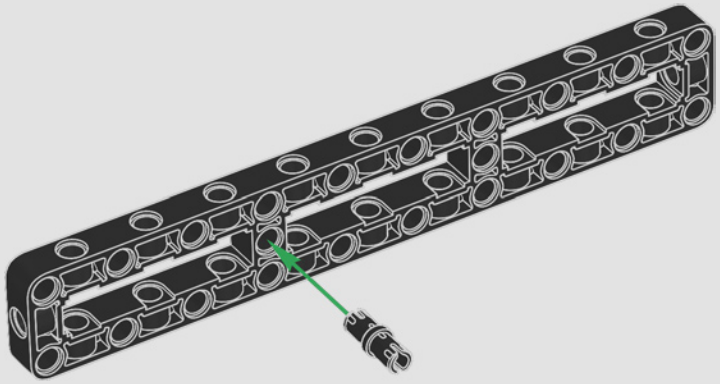

2

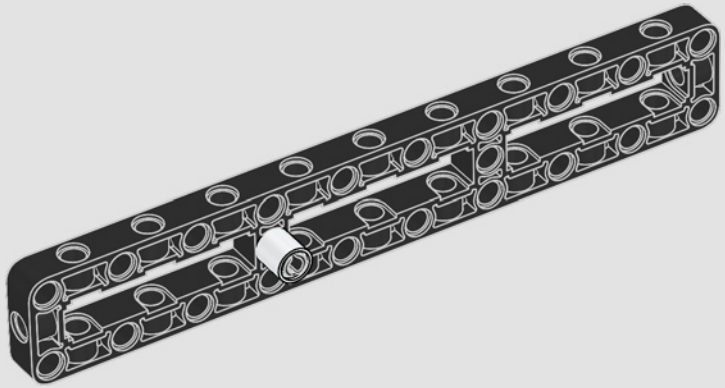

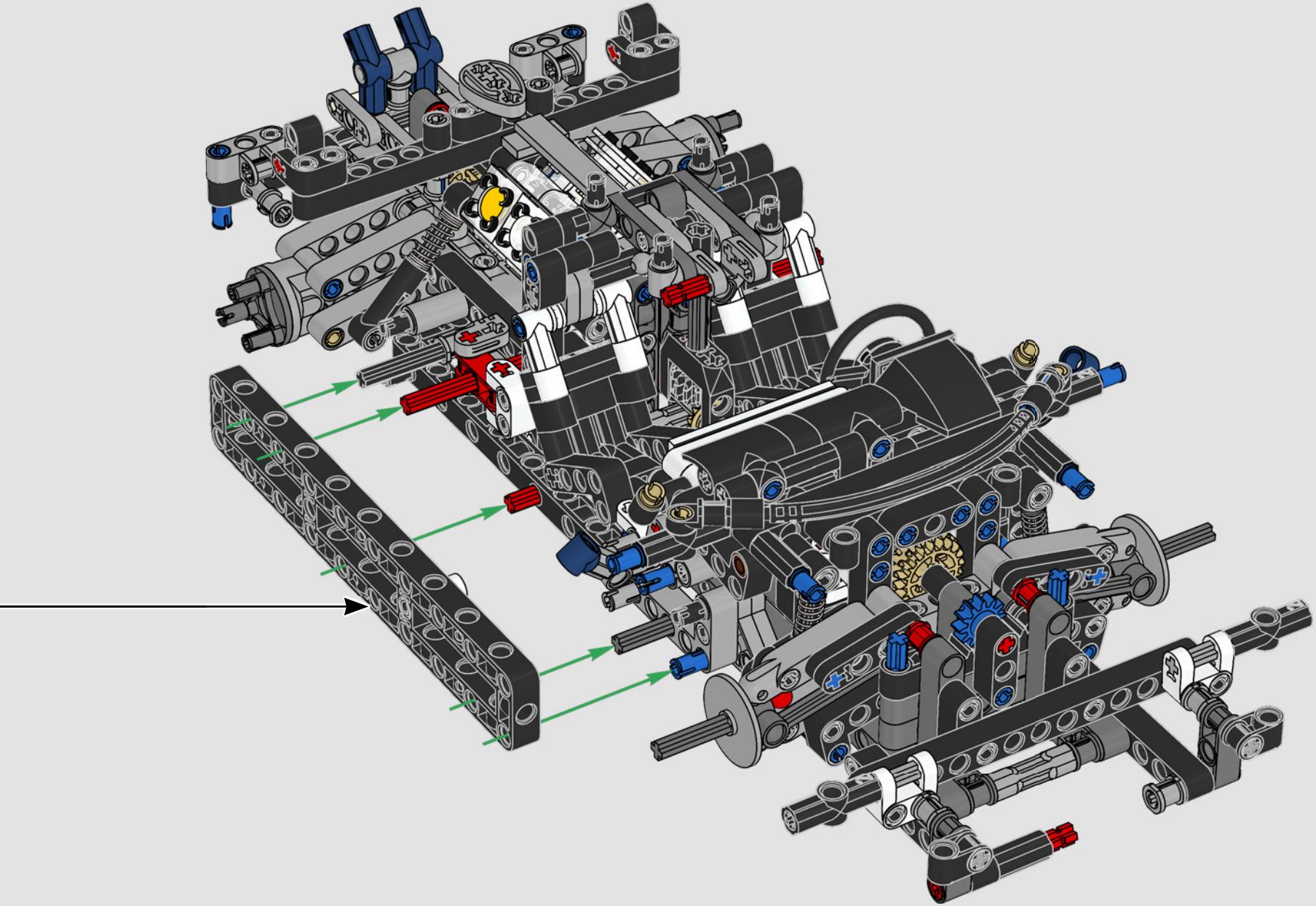

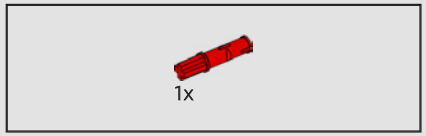

204

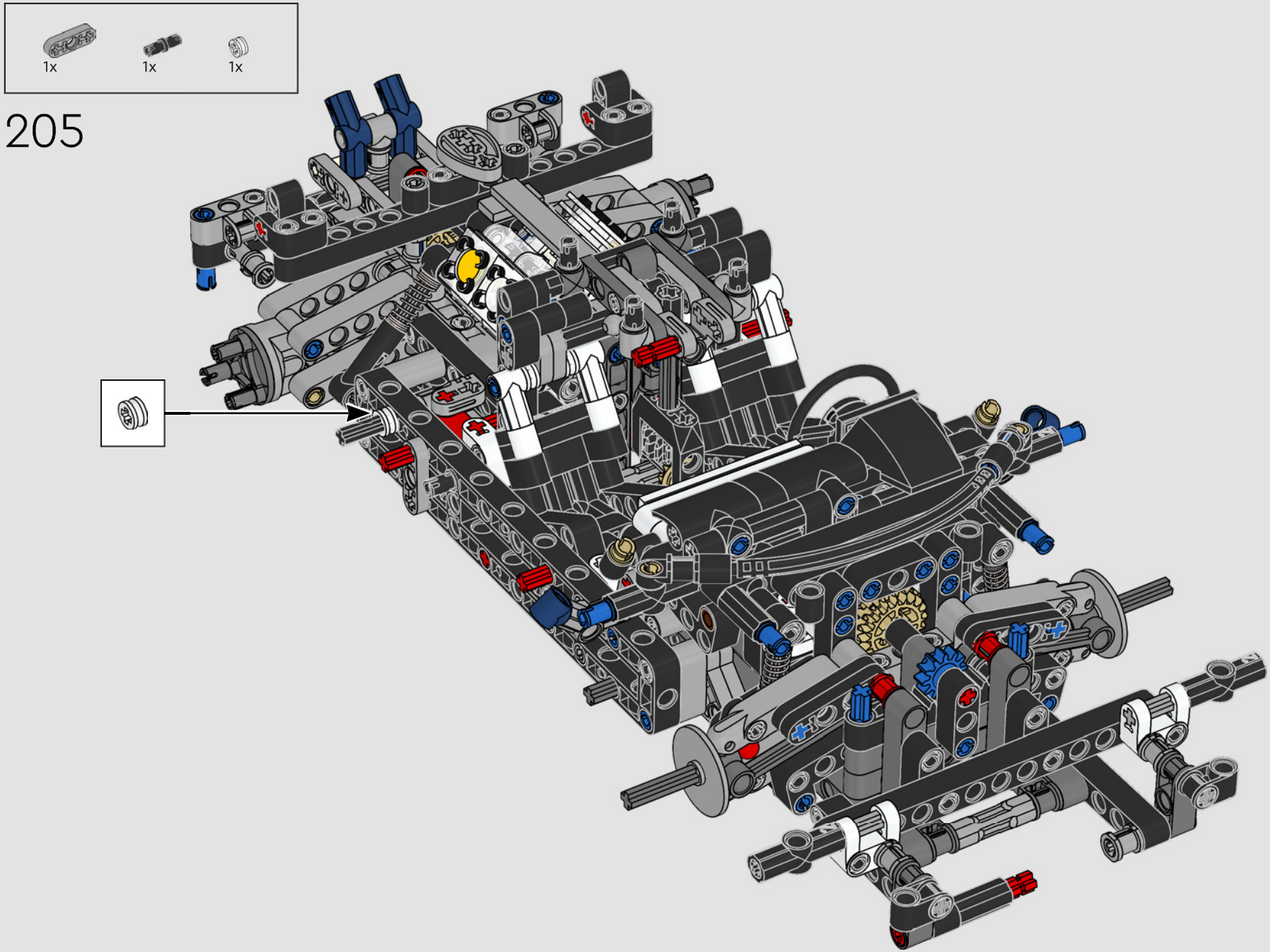
1x
1x
1x
205

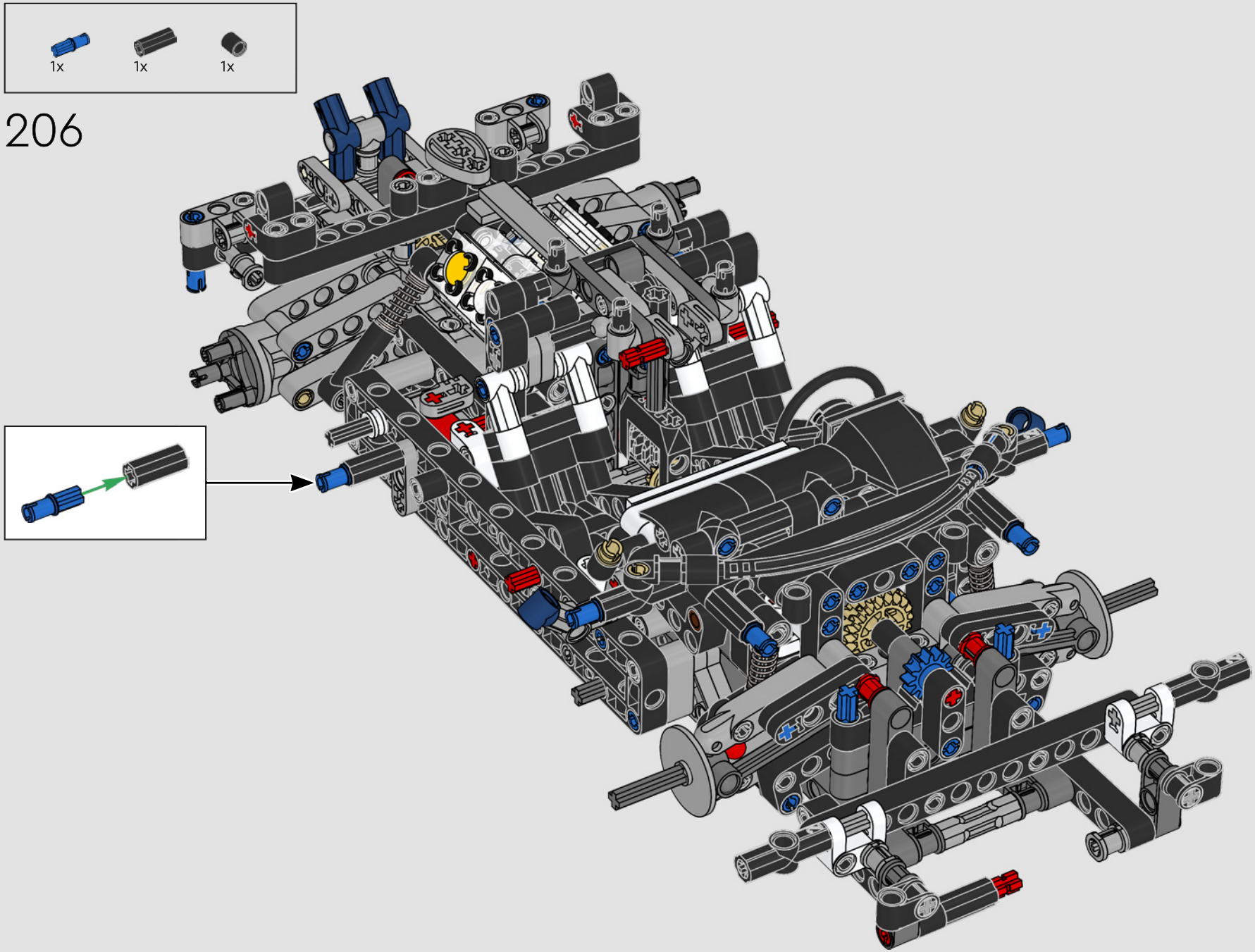
1x
1x
1x
206

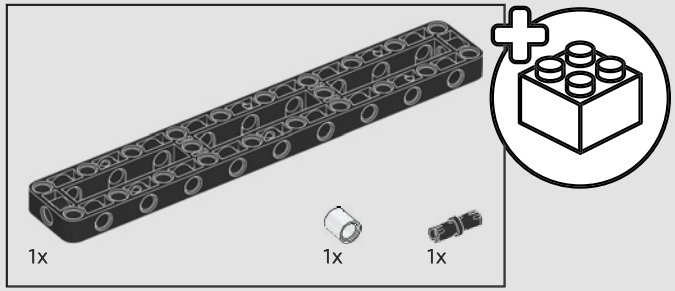

207

1

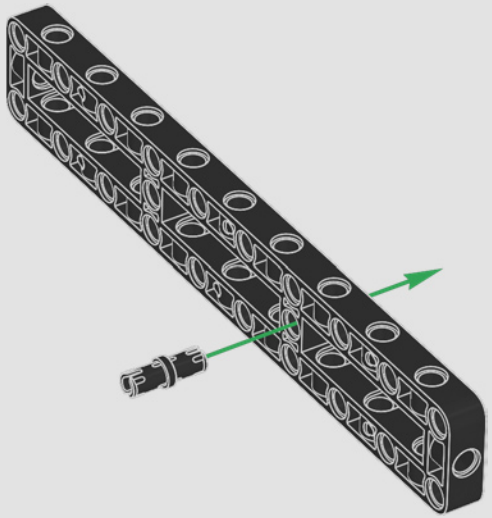

2

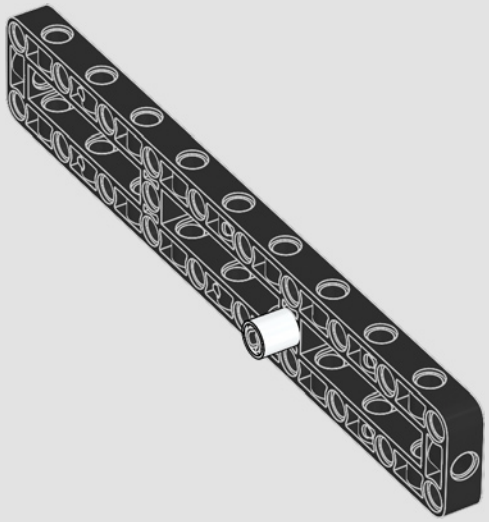

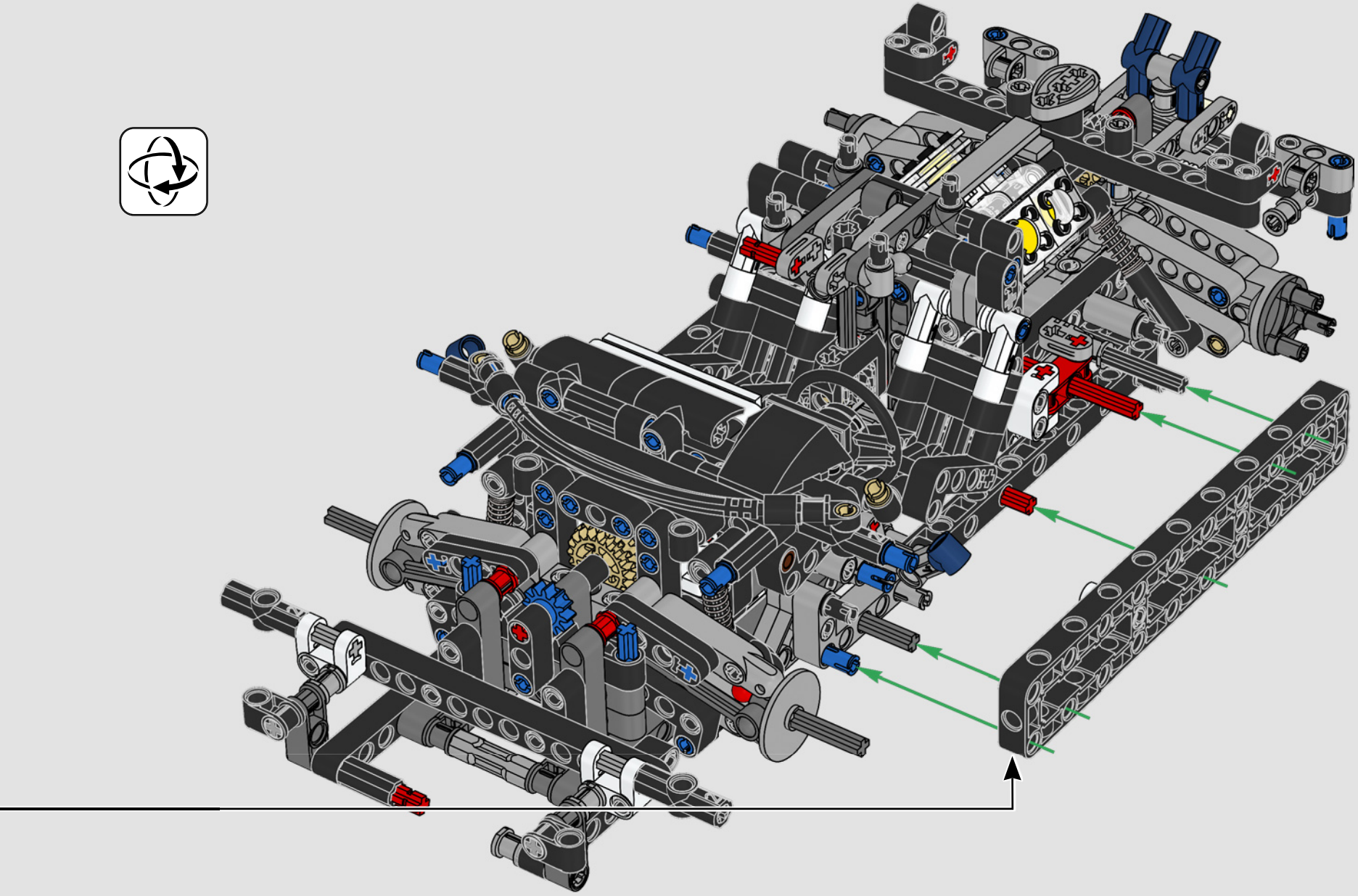

208

209

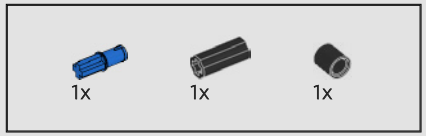

210

211

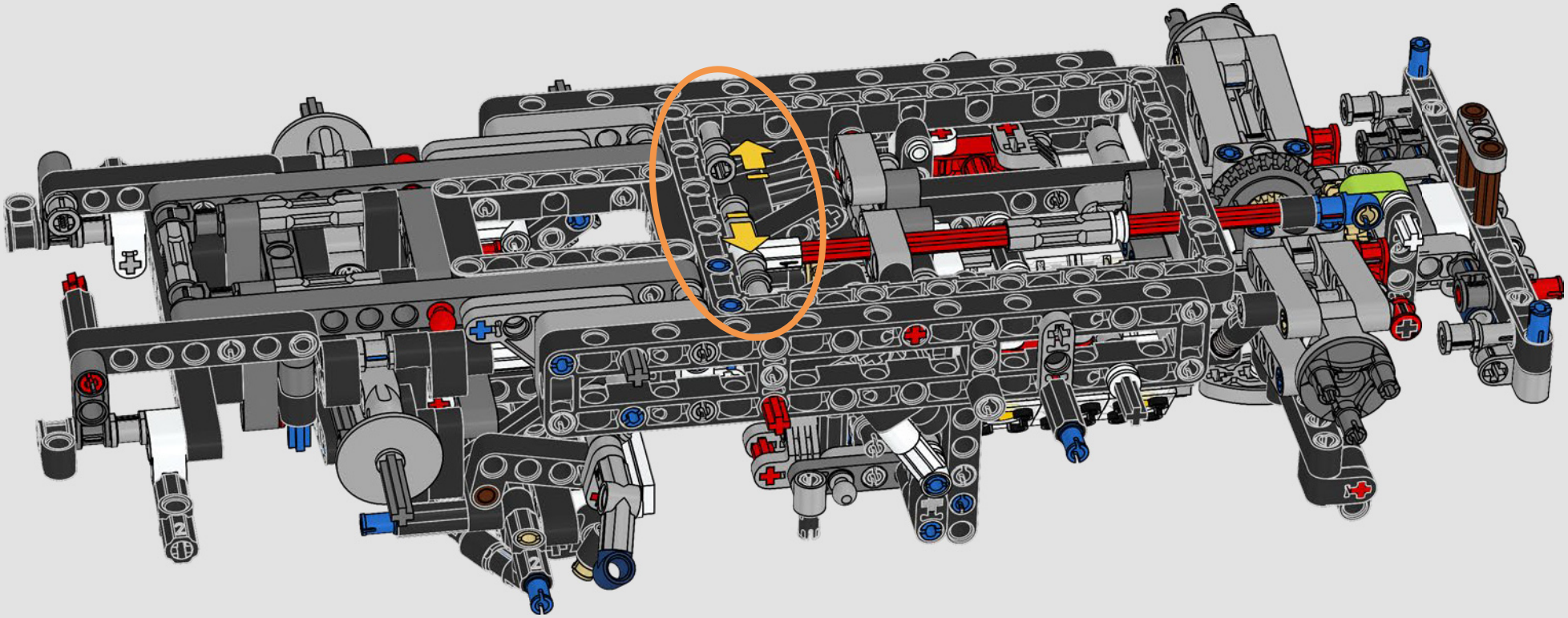

3

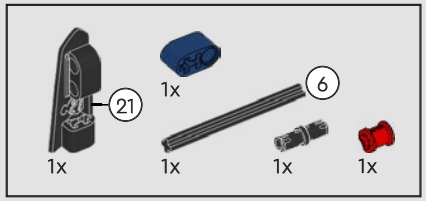

212

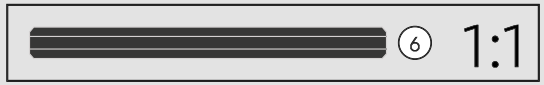

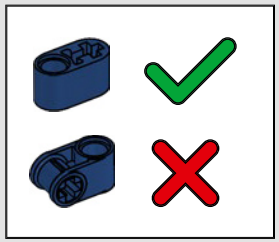

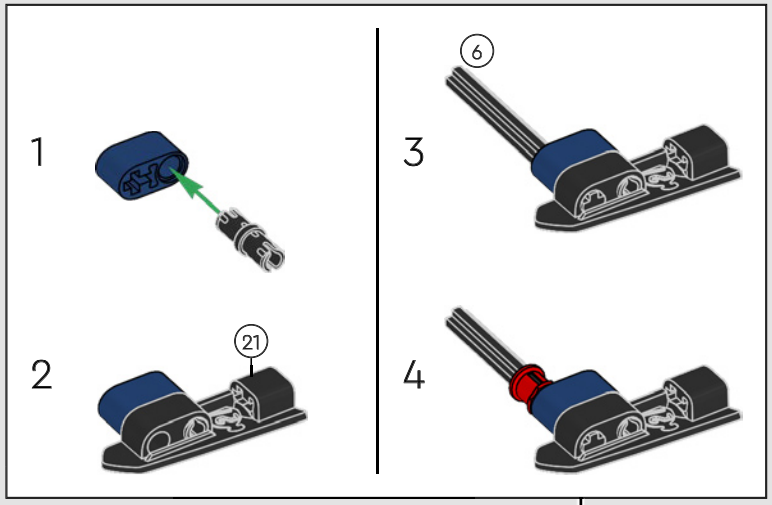

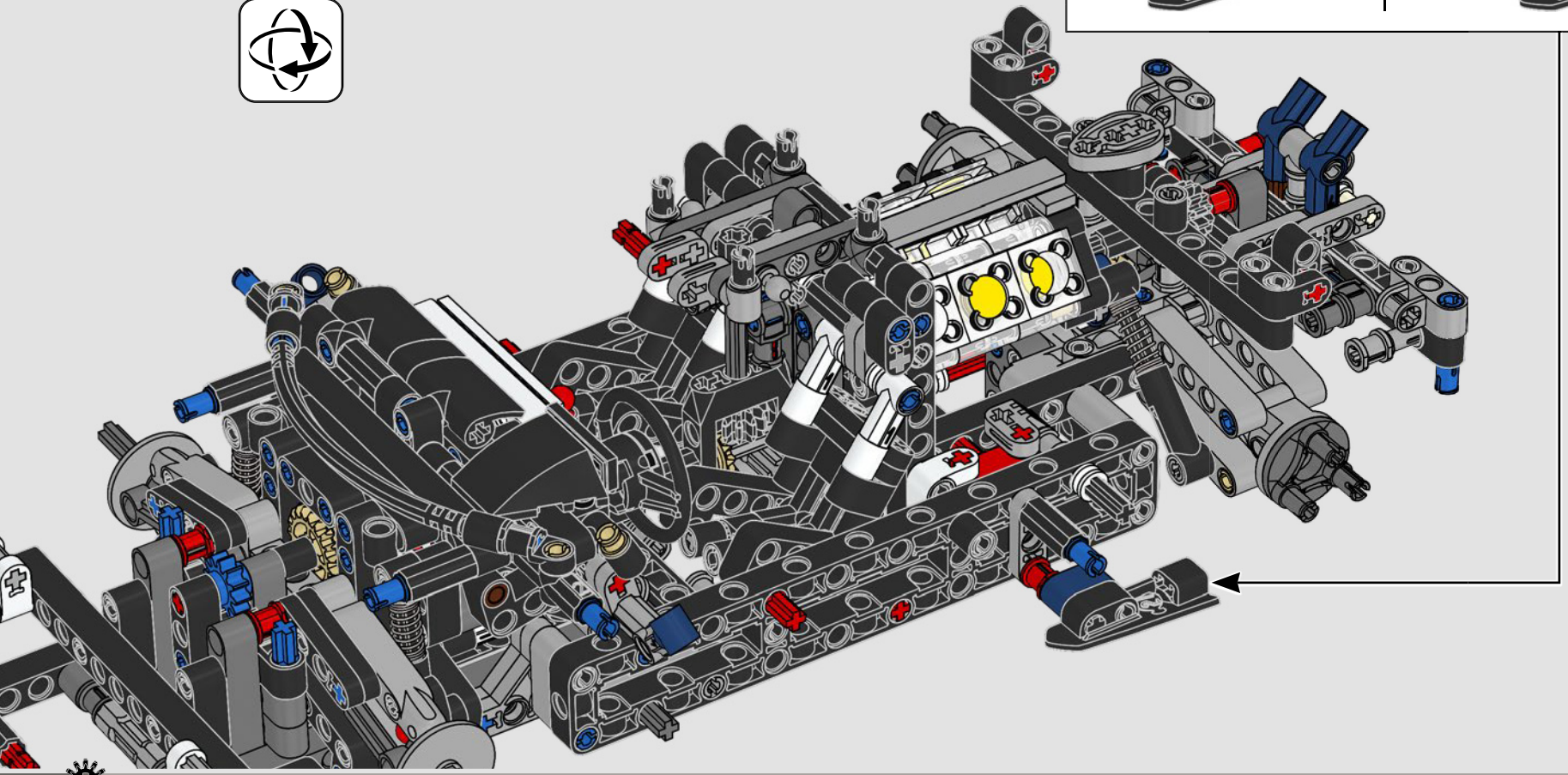

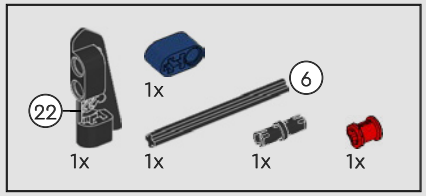

213

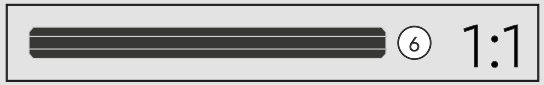

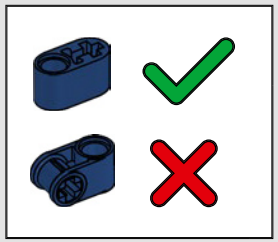

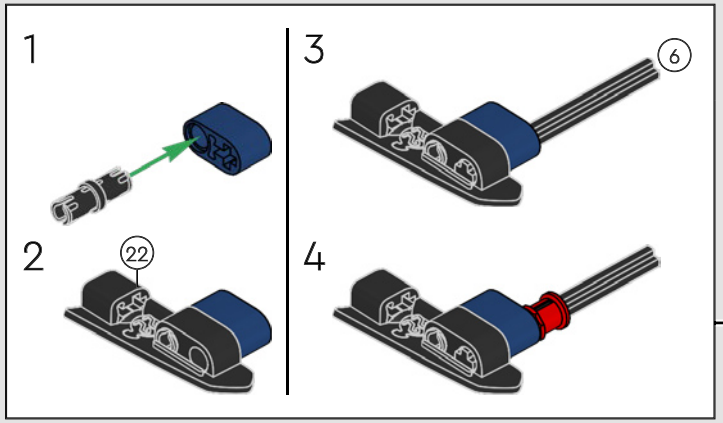

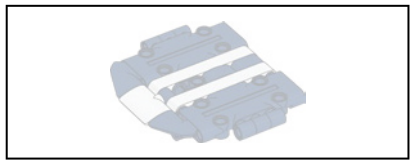

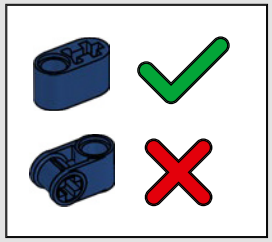

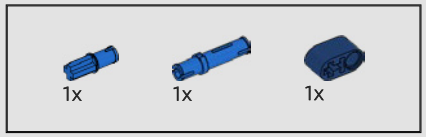

214

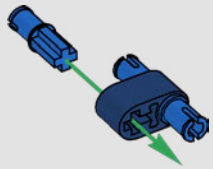

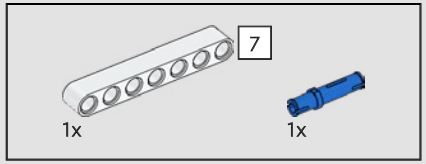

215

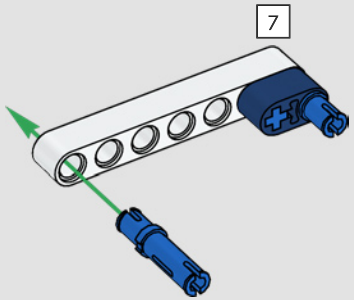

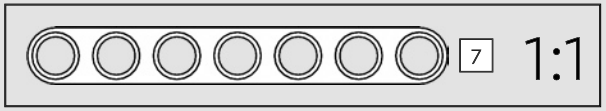

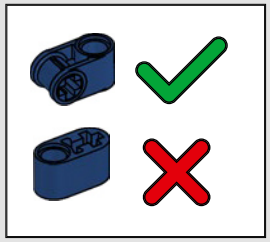

216

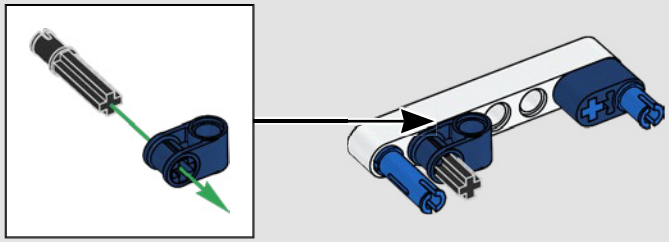

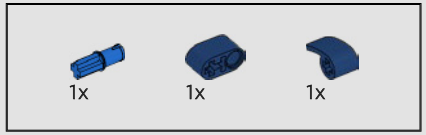

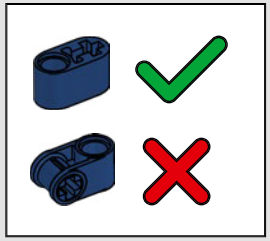

217

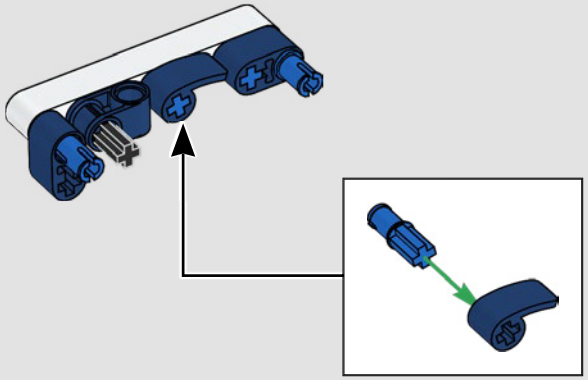

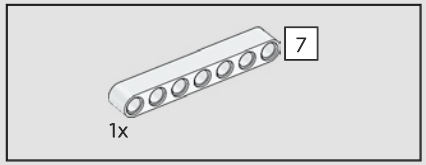

218

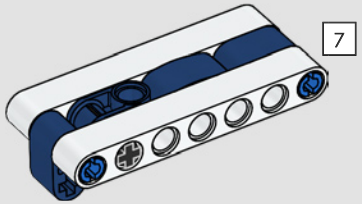

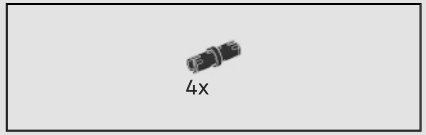

219

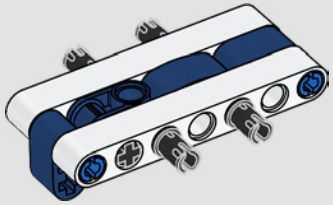

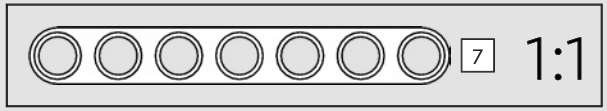

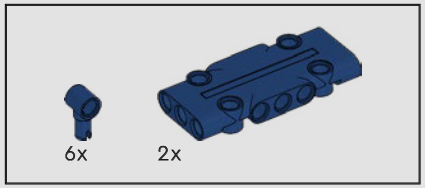

220

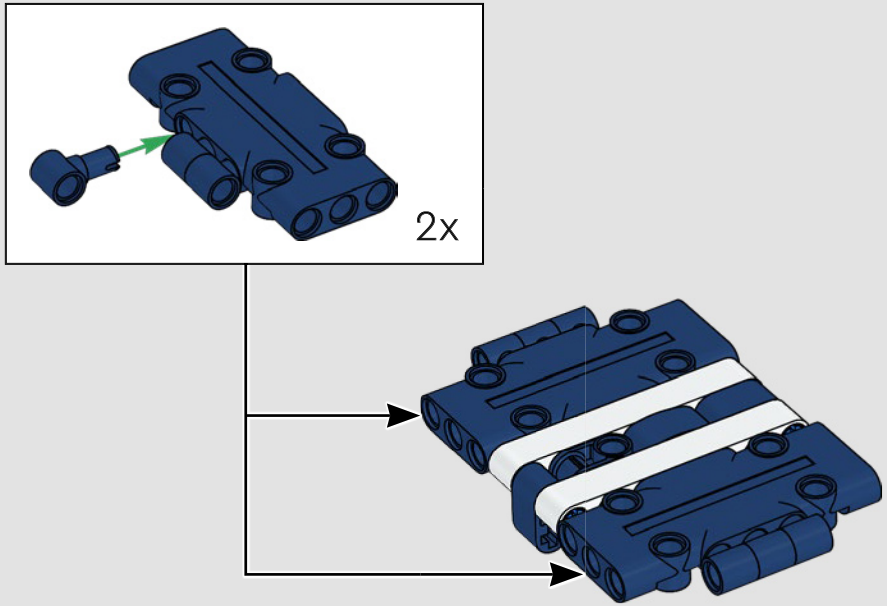

221

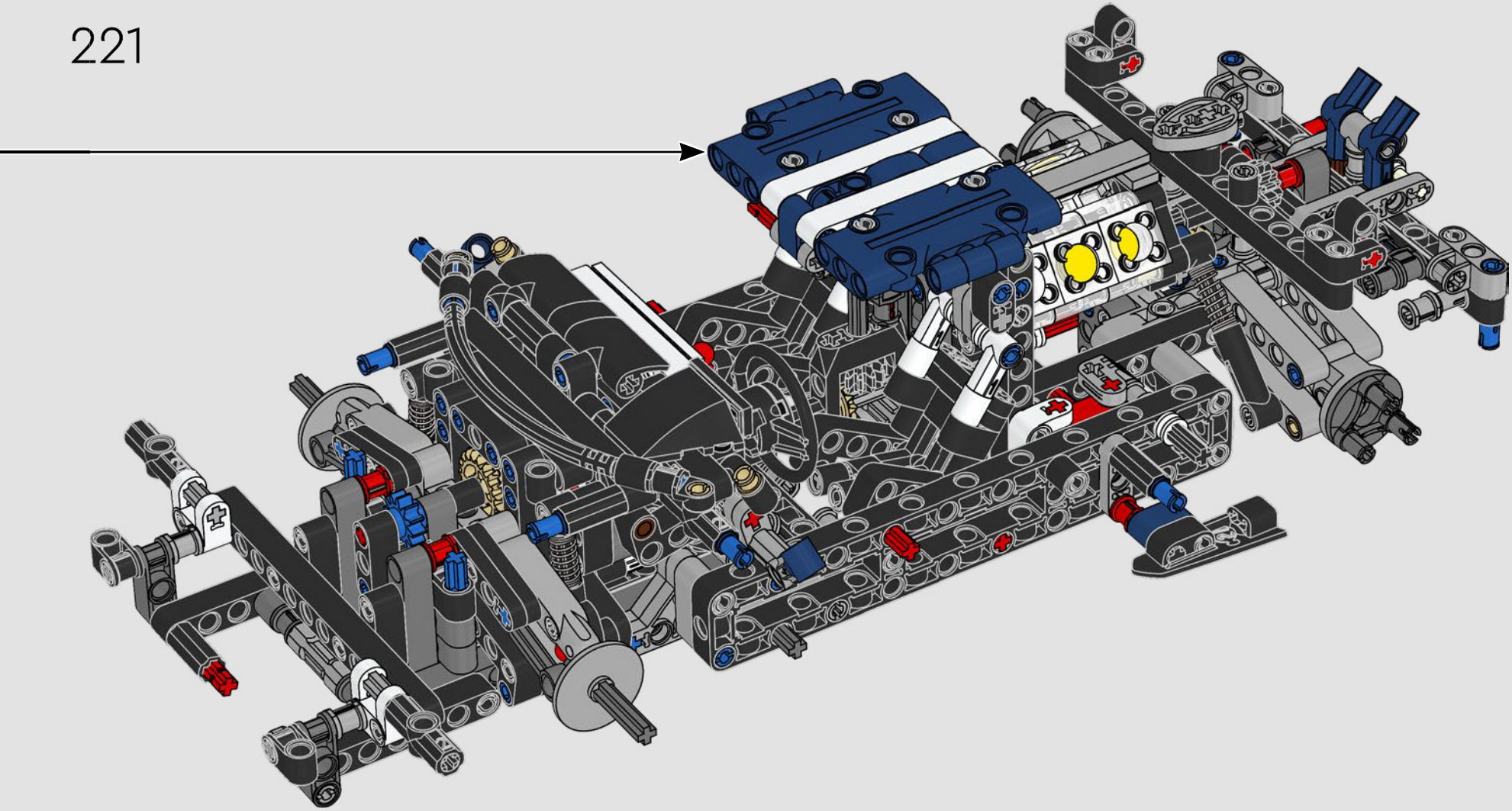

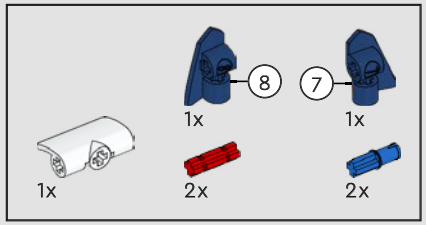

222

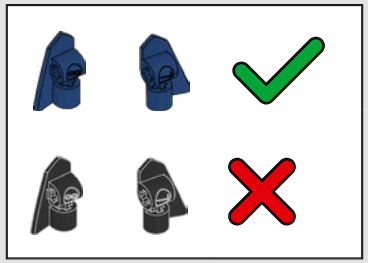

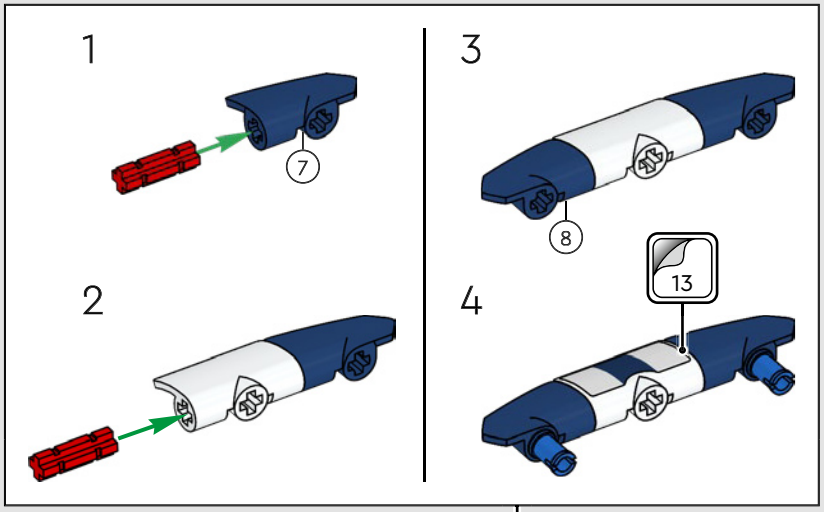

223

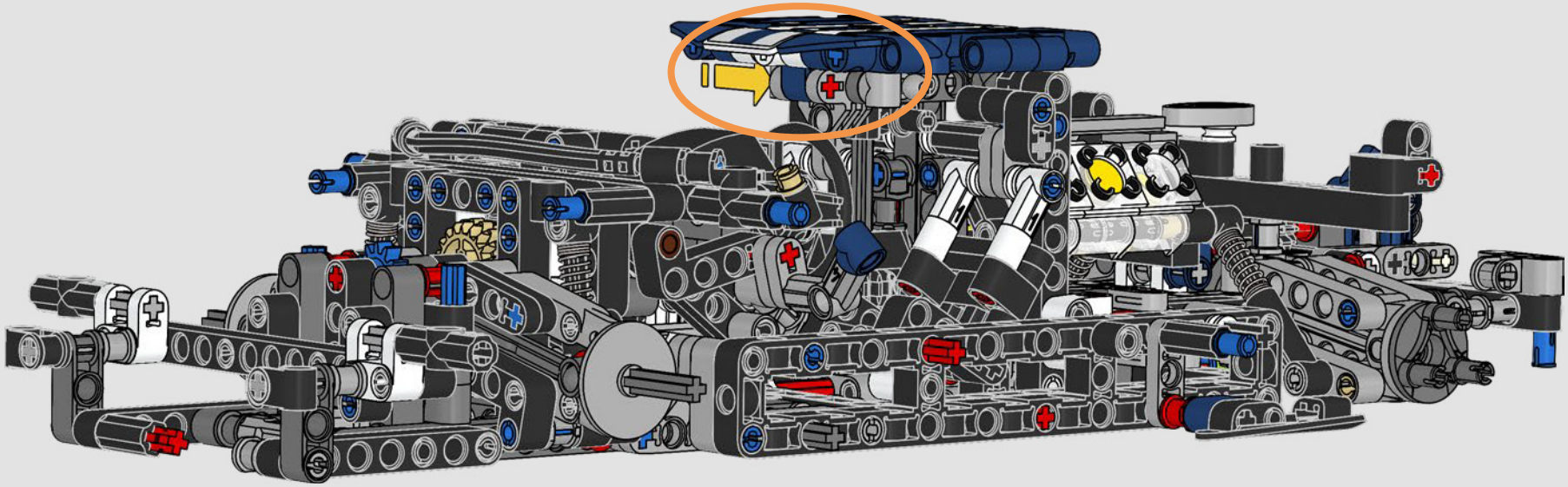

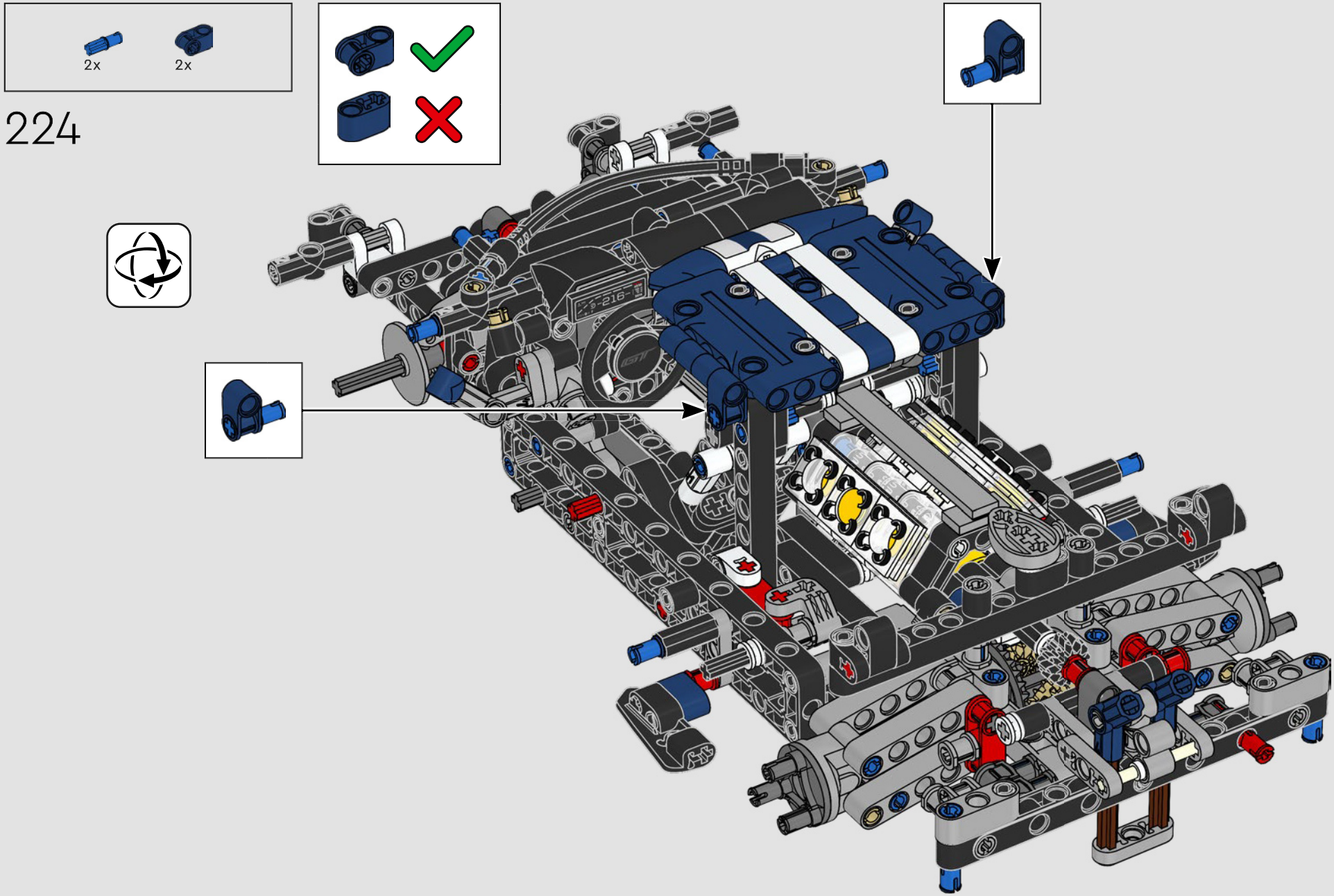
2x
2x
224

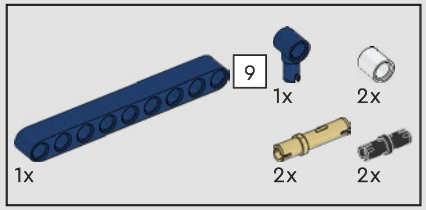

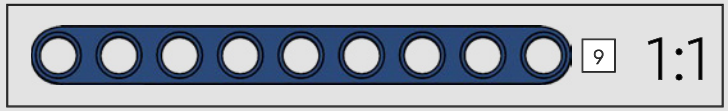

225

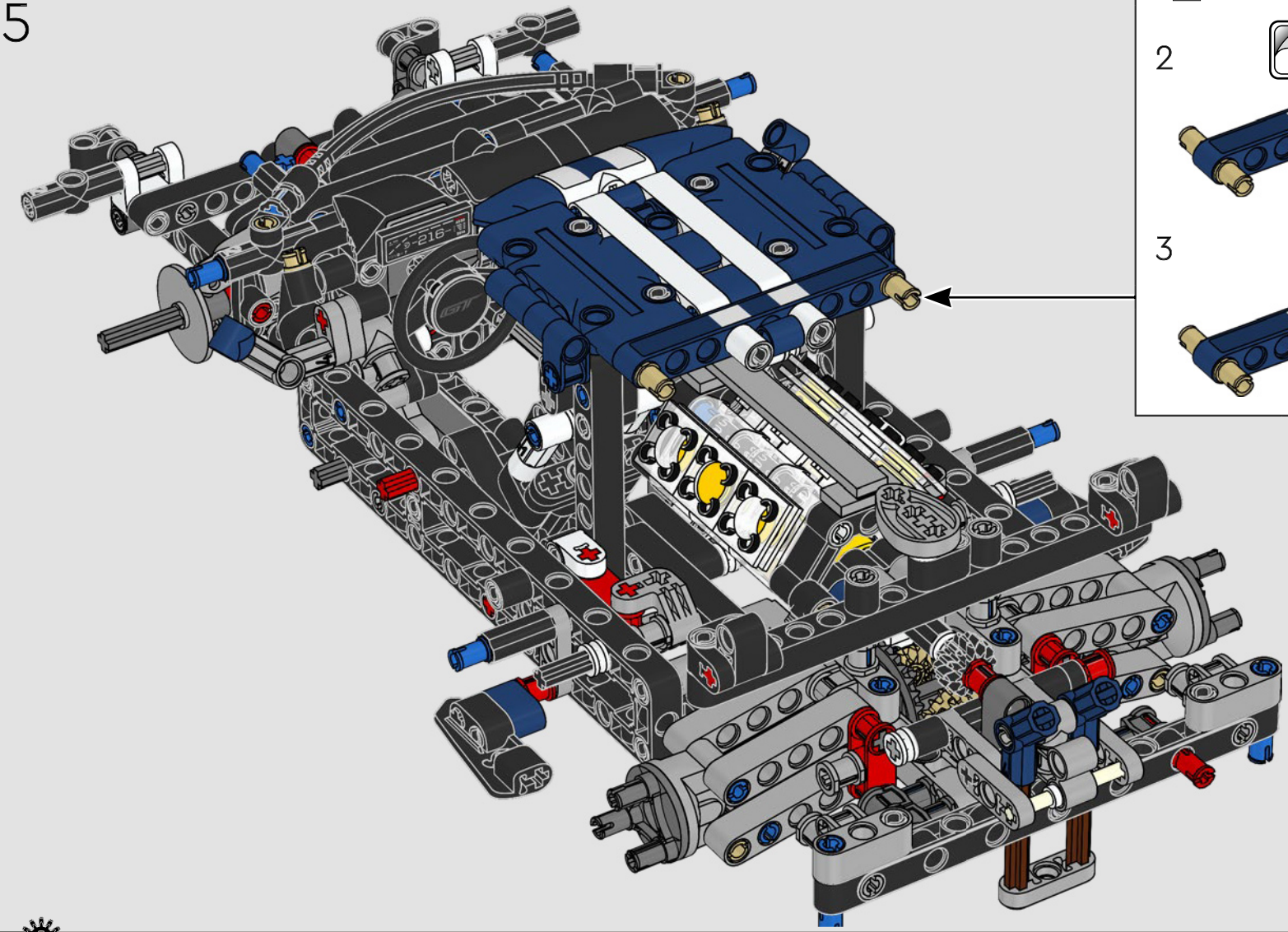

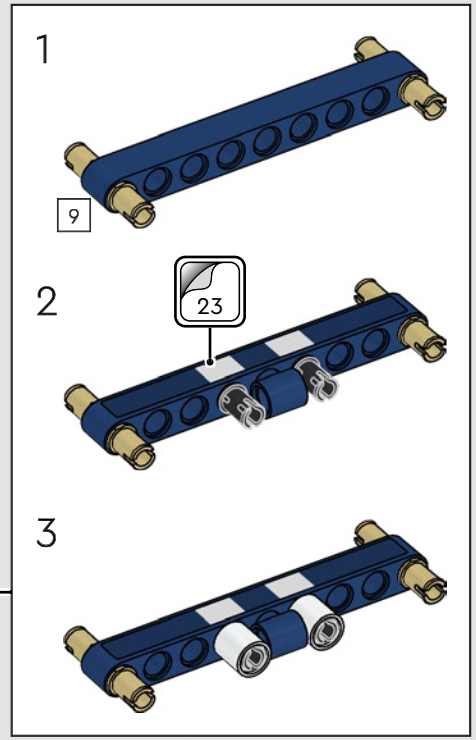

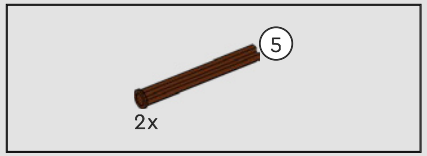

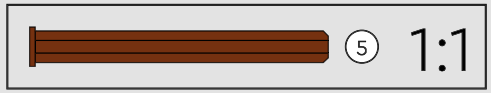

226

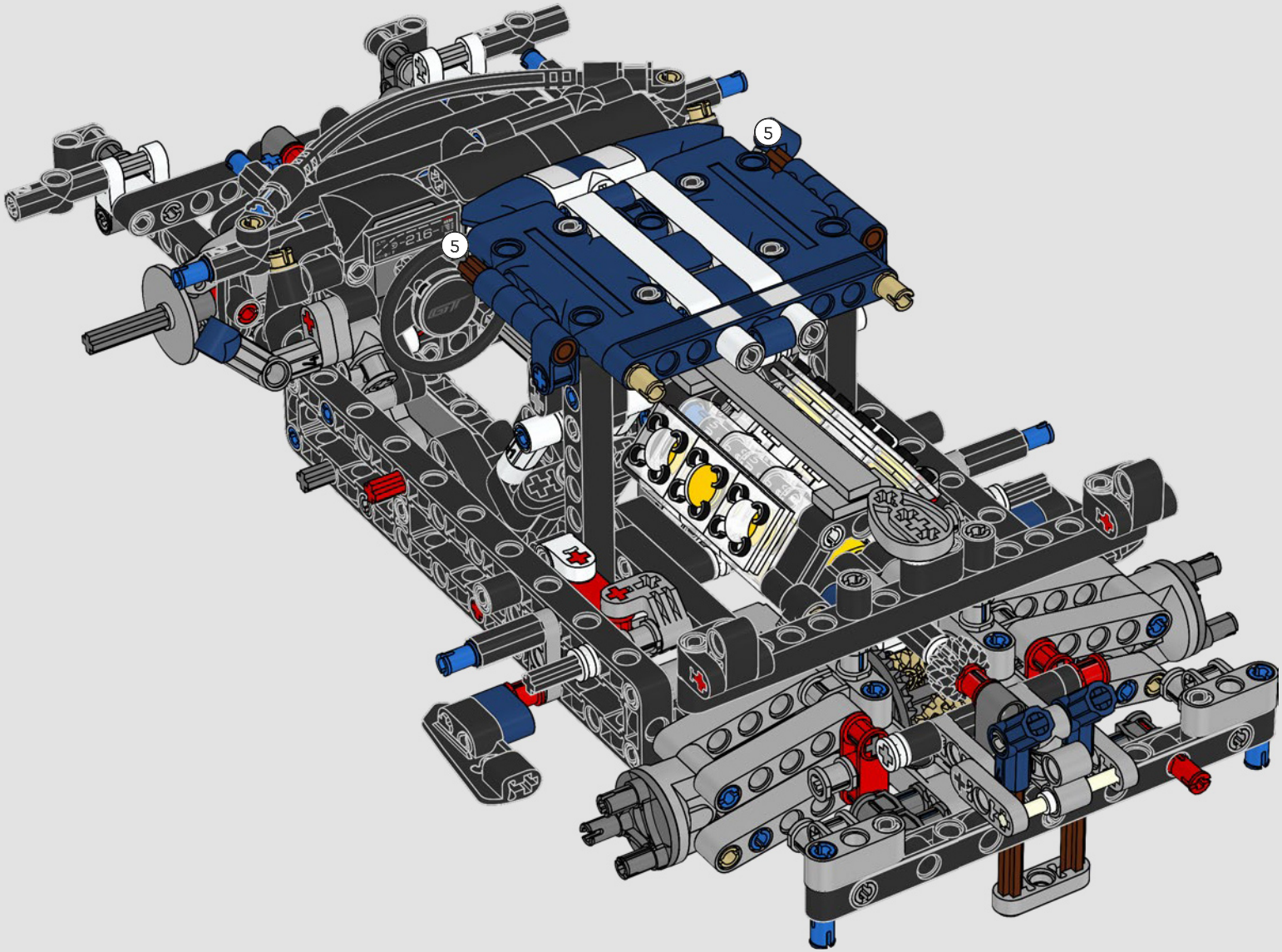

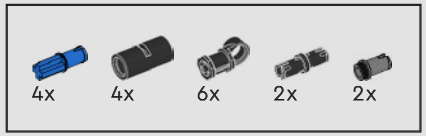

227

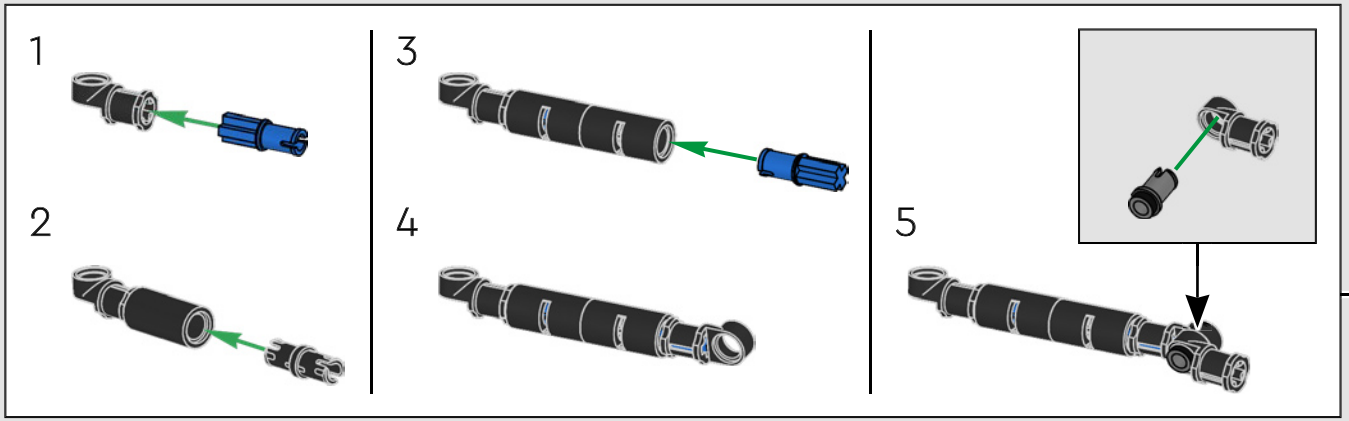

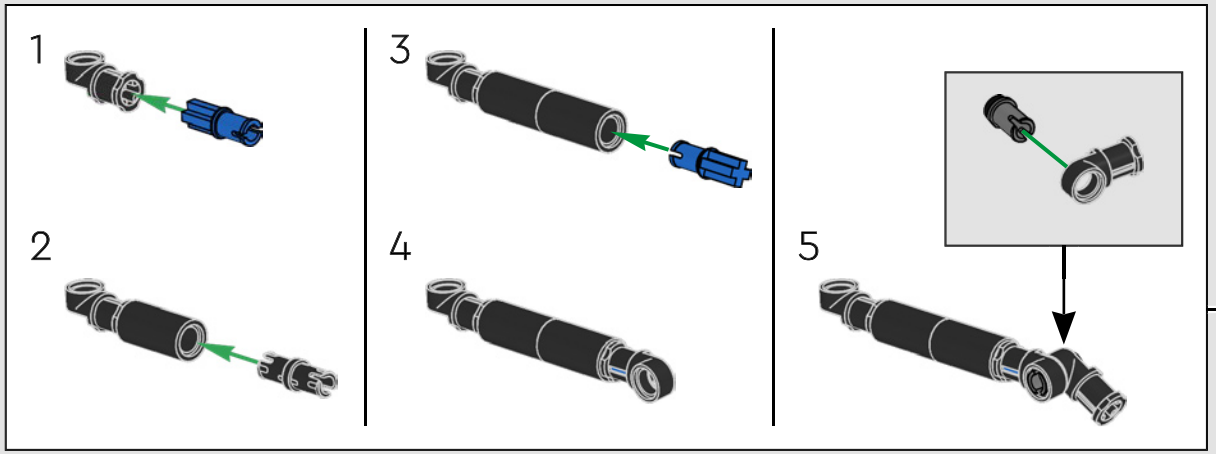

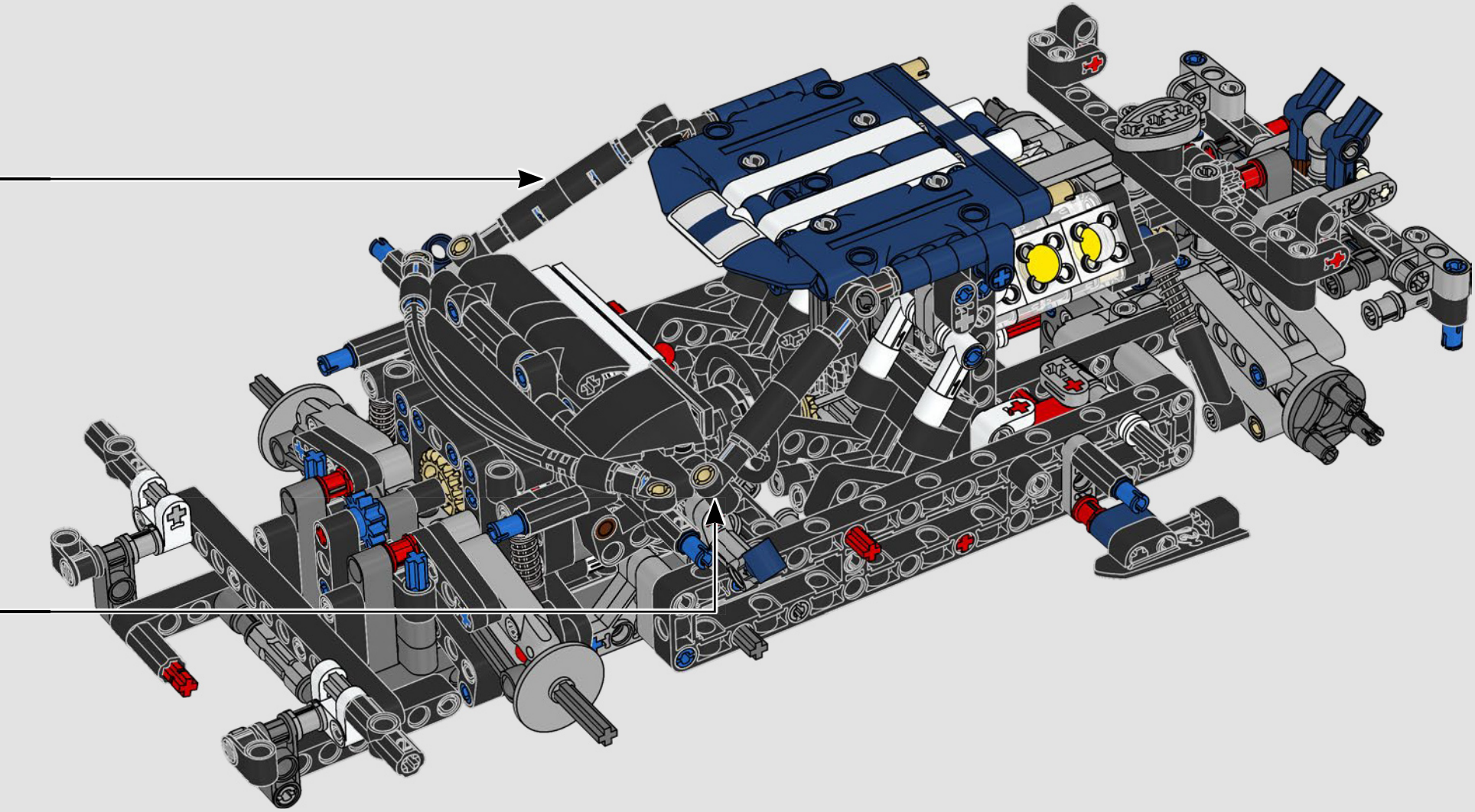

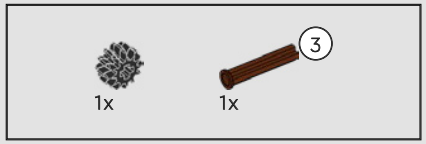

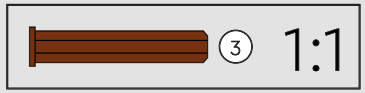

228

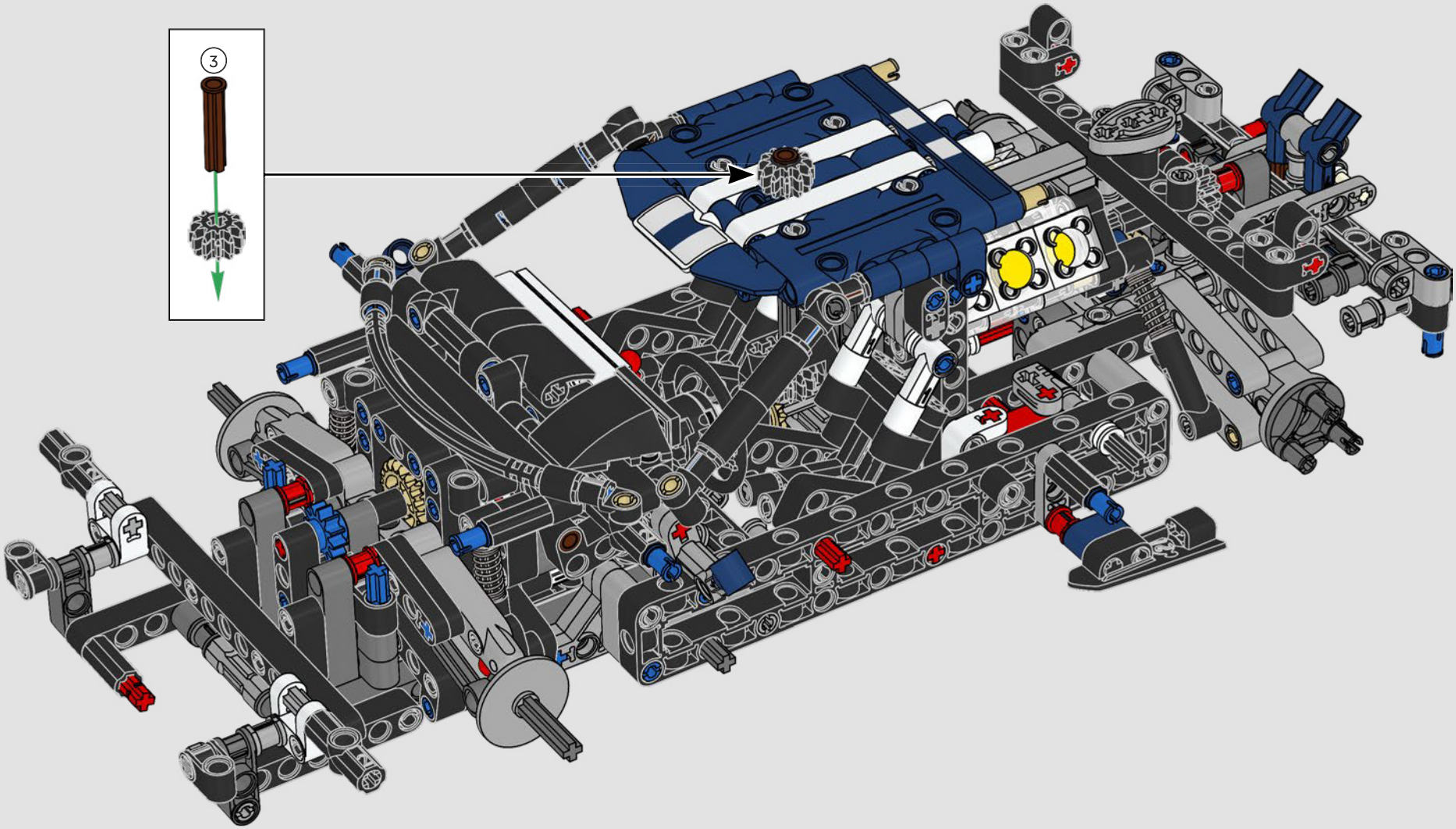

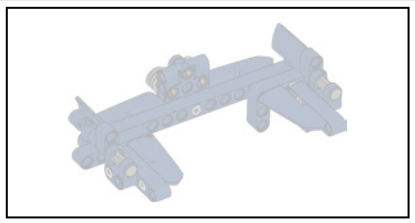

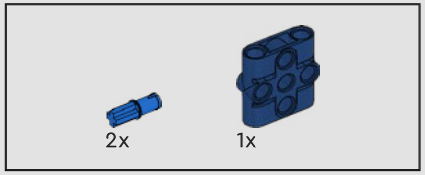

229

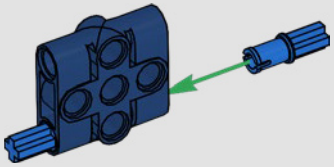

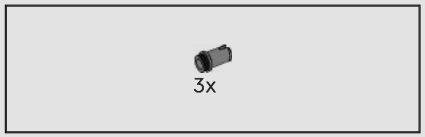

230

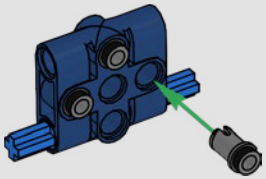

231

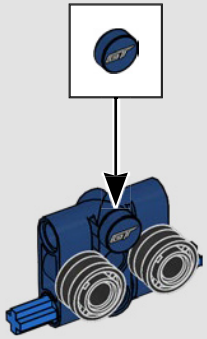

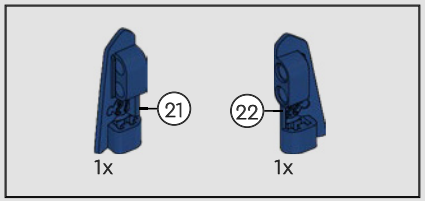

232

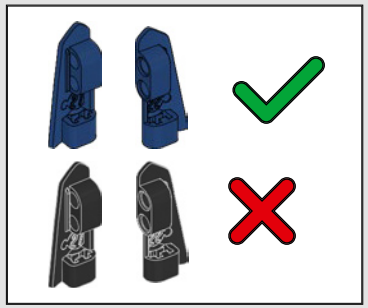

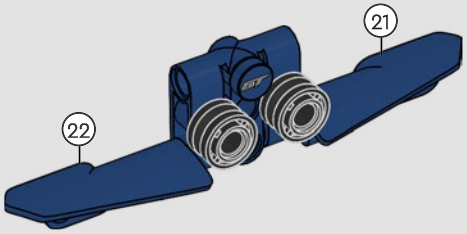

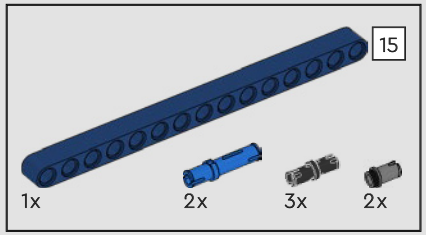

233

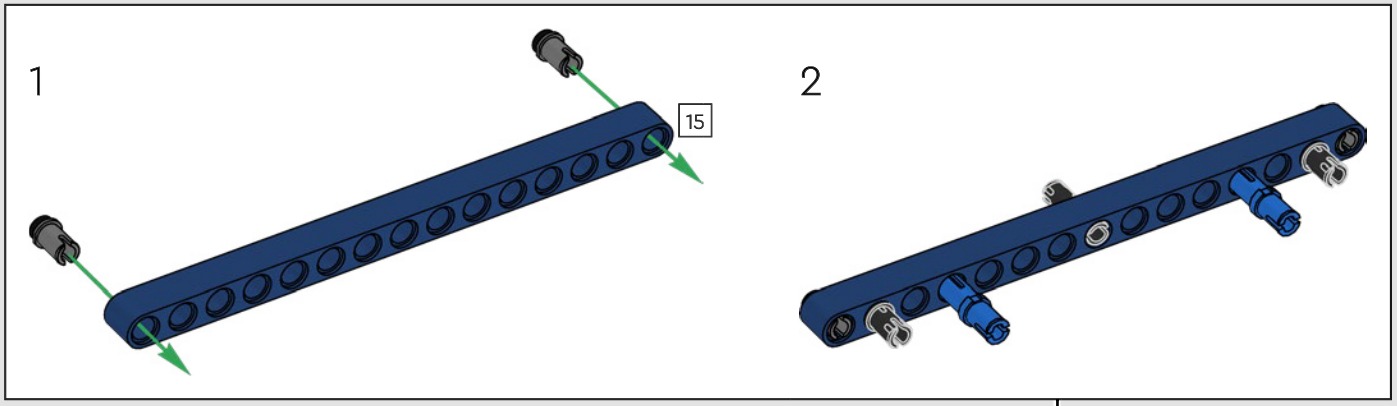

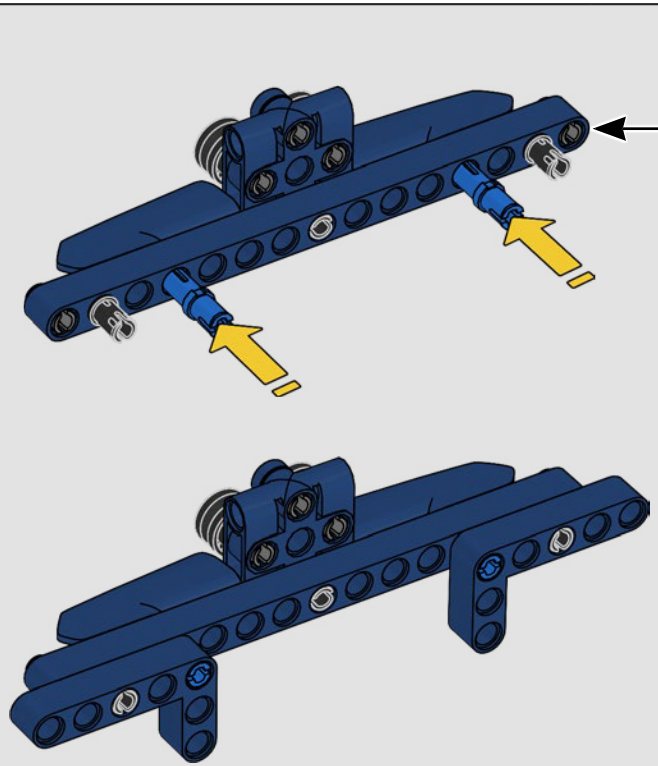

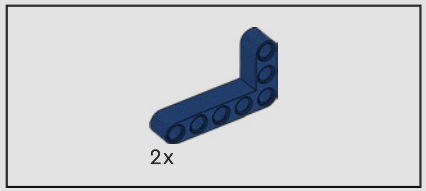

234

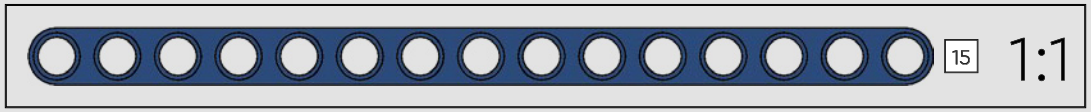

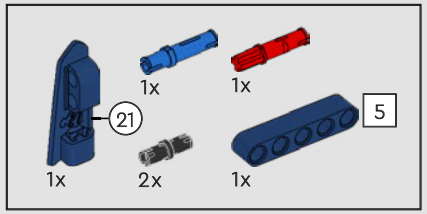

235

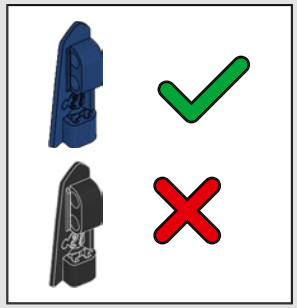

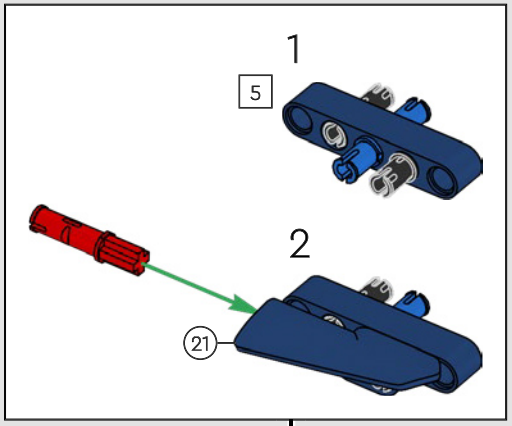

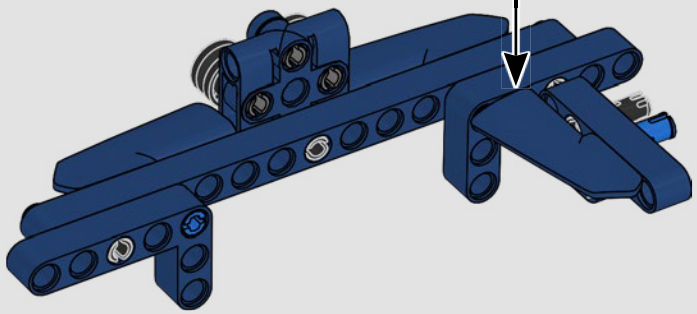

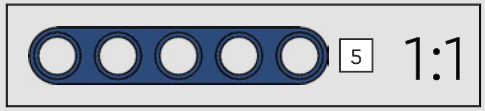

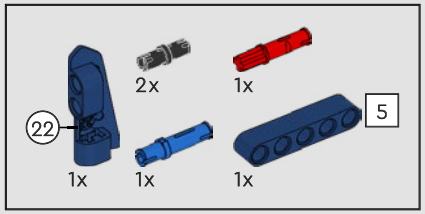

236

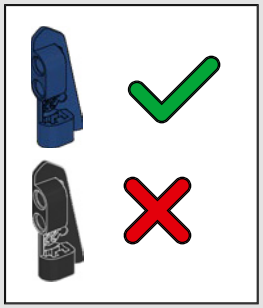

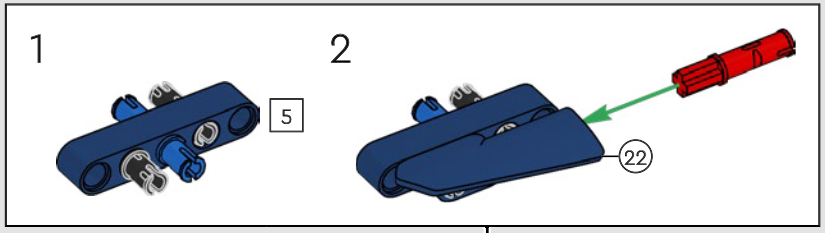

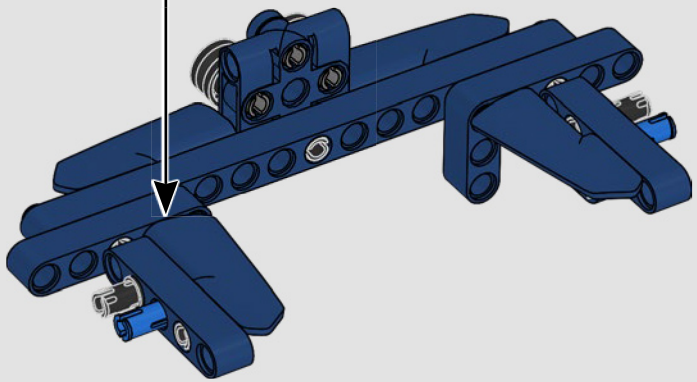

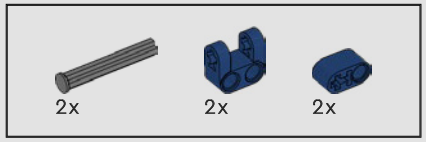

237

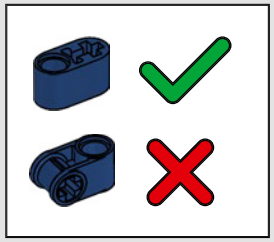

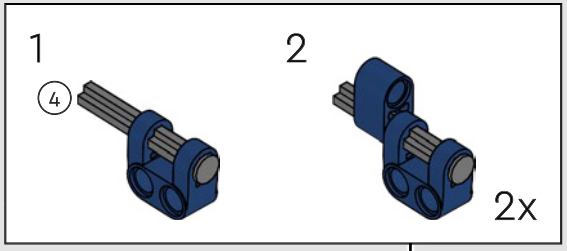

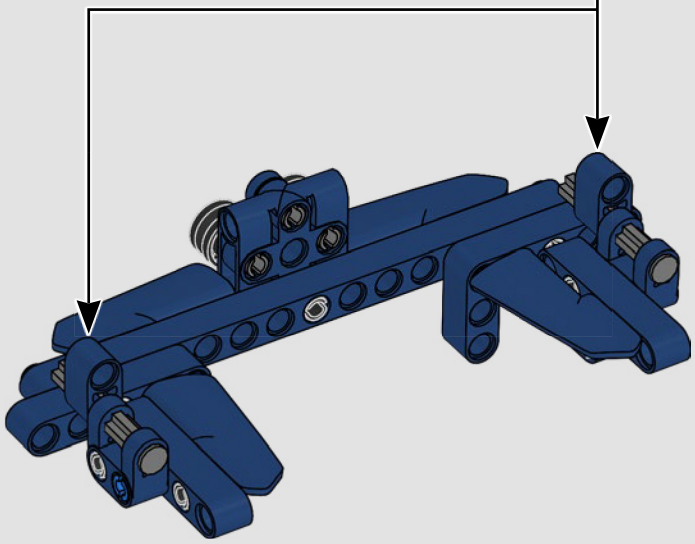

238

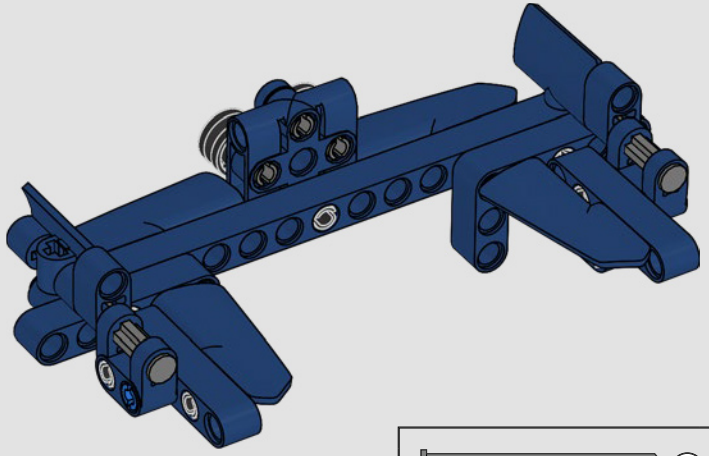

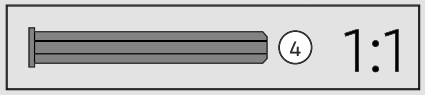

239

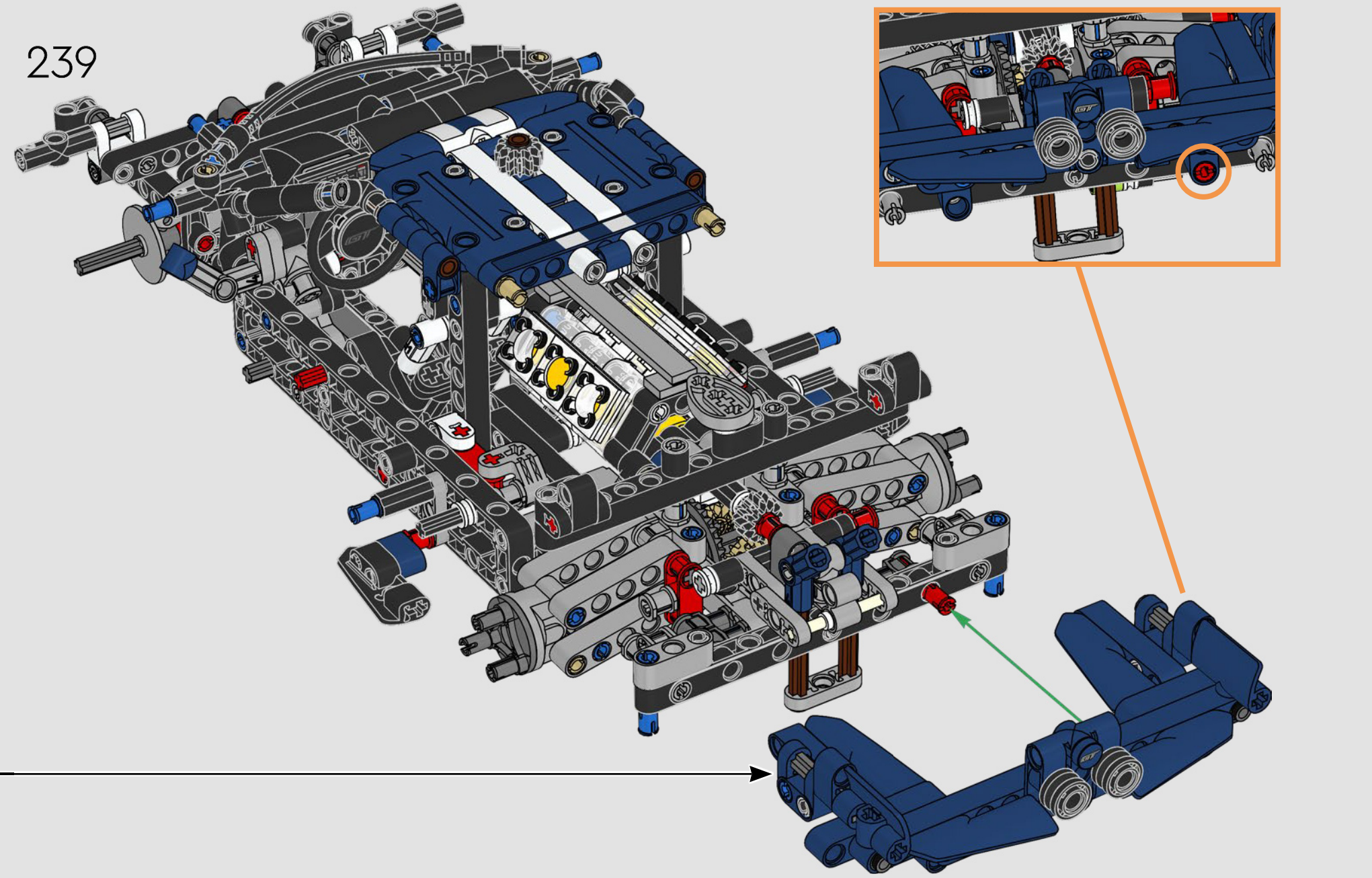

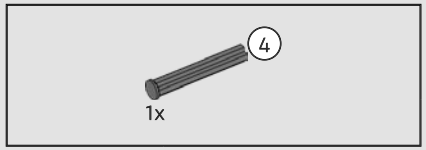

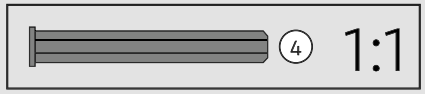

240

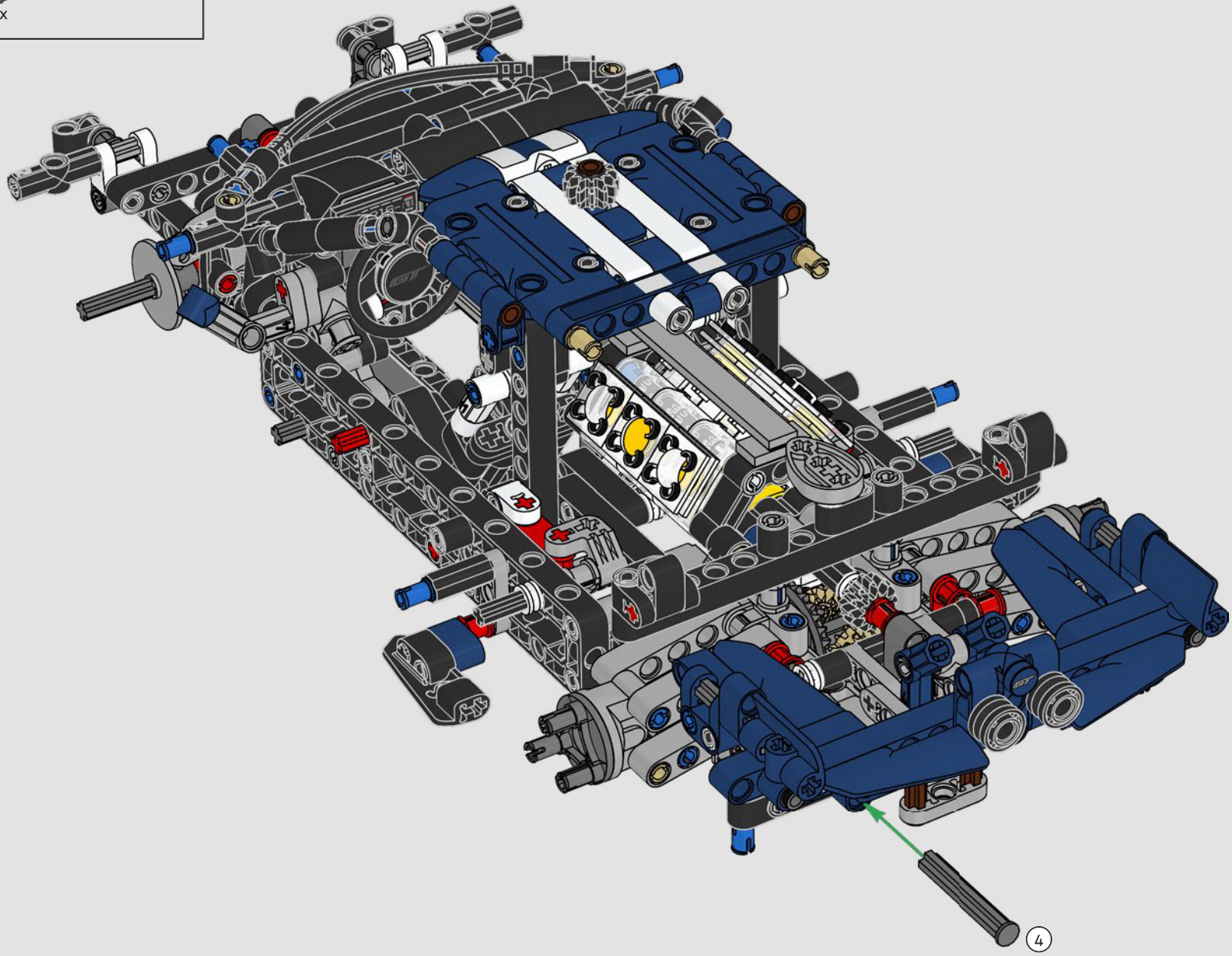

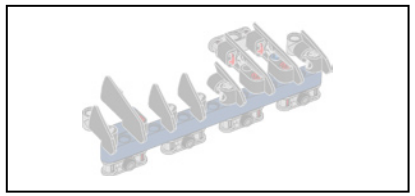

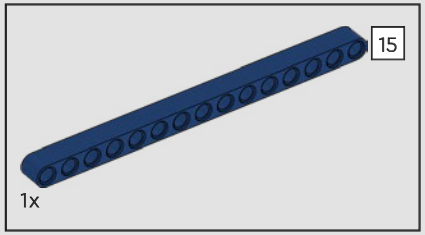

241

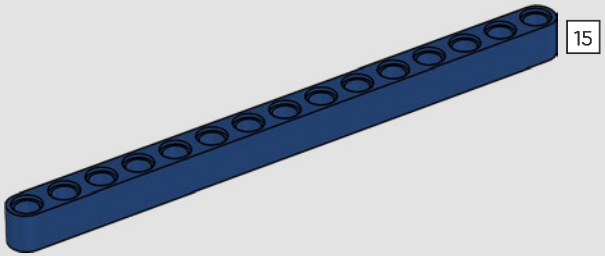

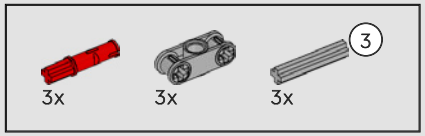

242

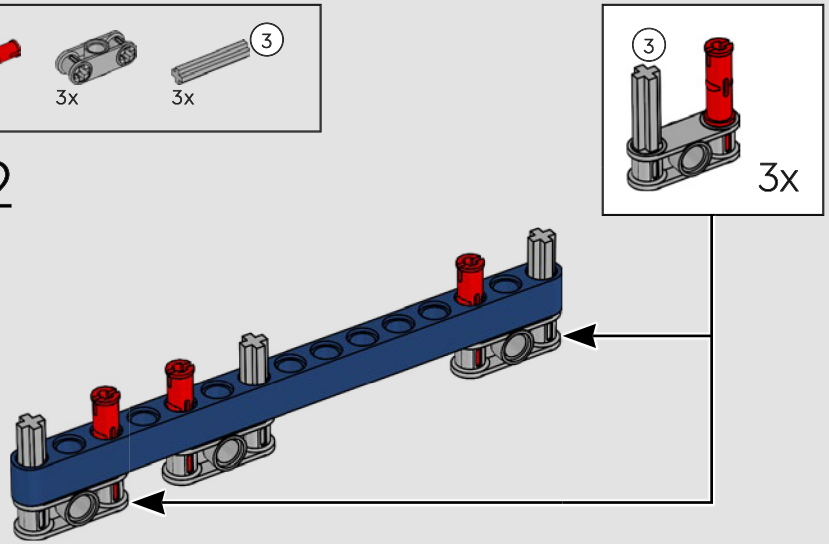

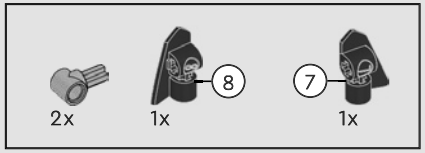

243

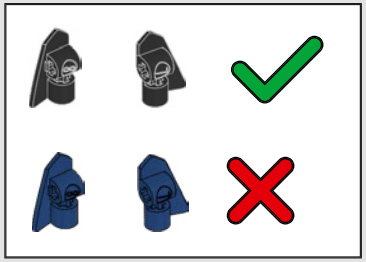

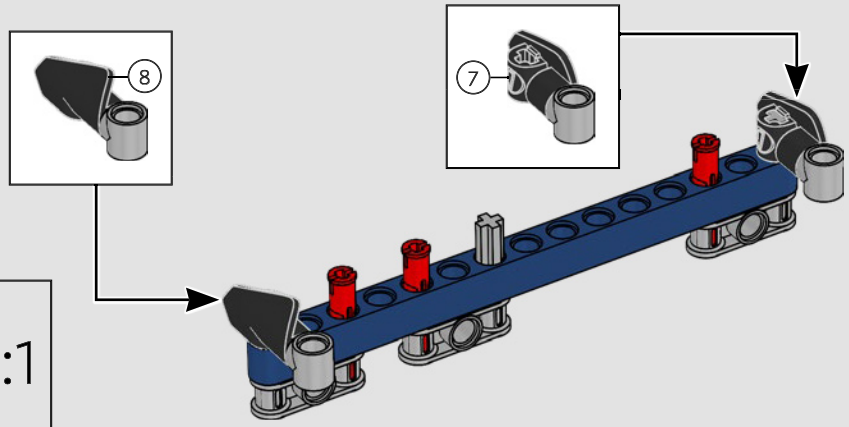

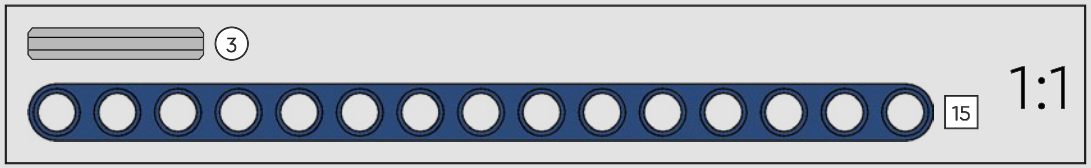

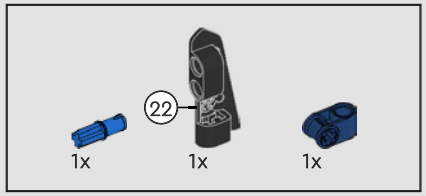

244

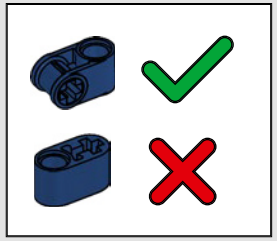

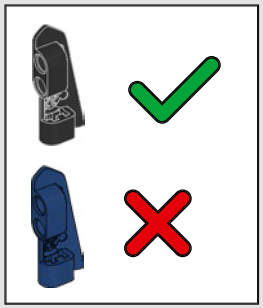

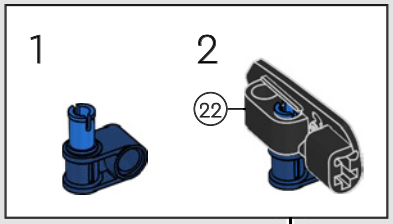

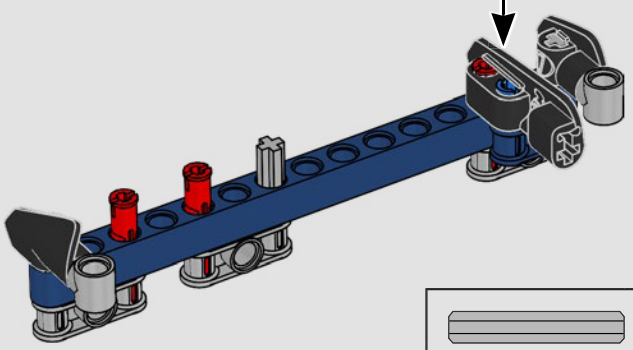

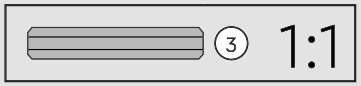

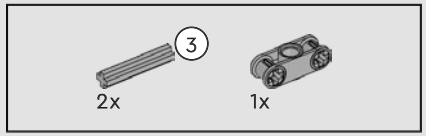

245

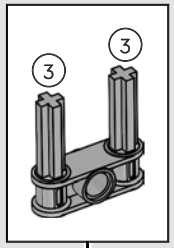

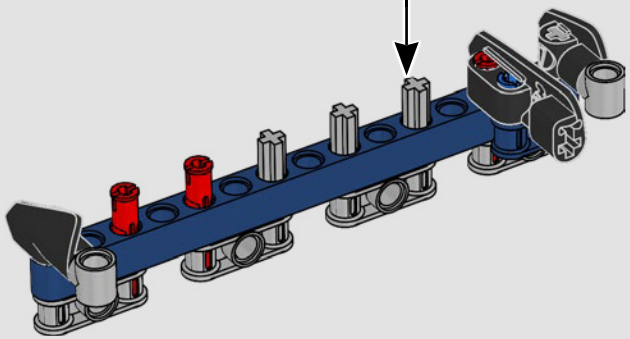

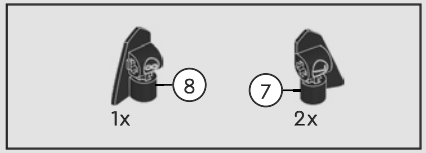

246

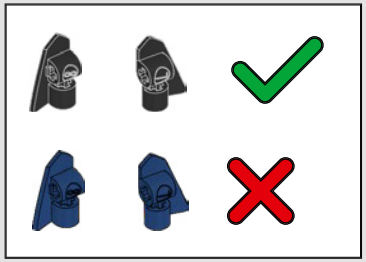

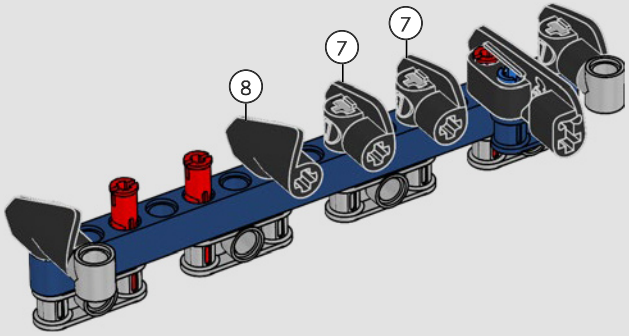

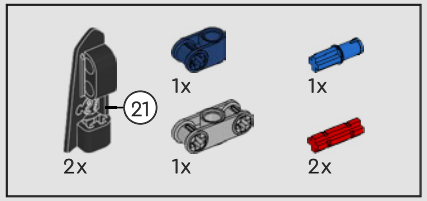

247

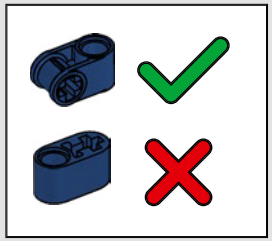

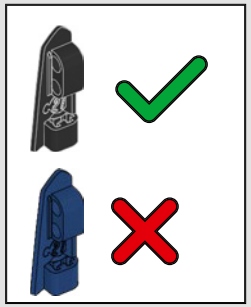

248

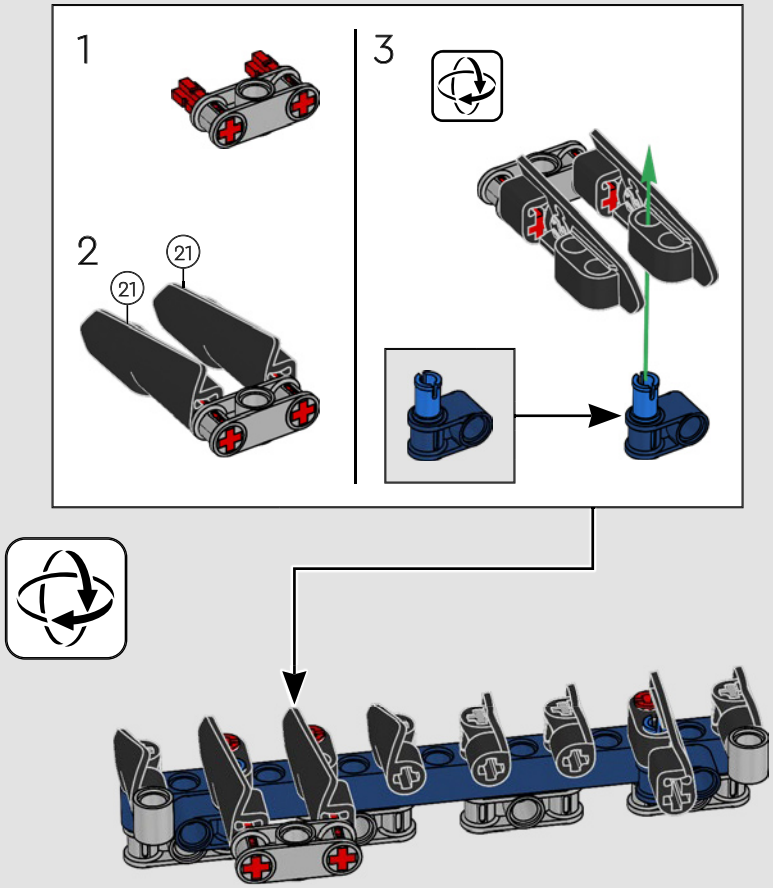

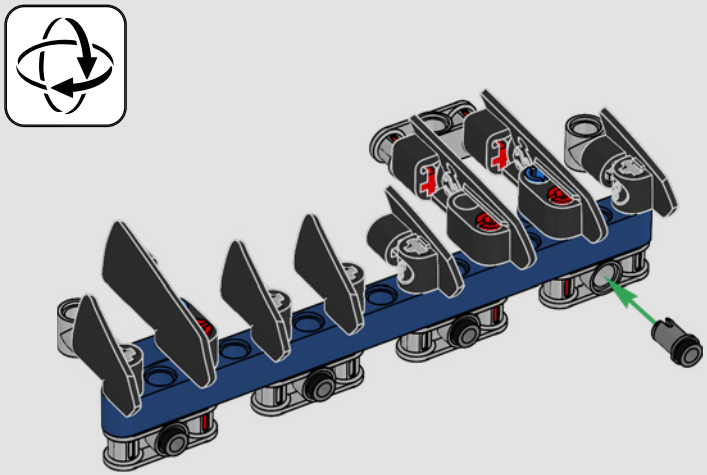

249

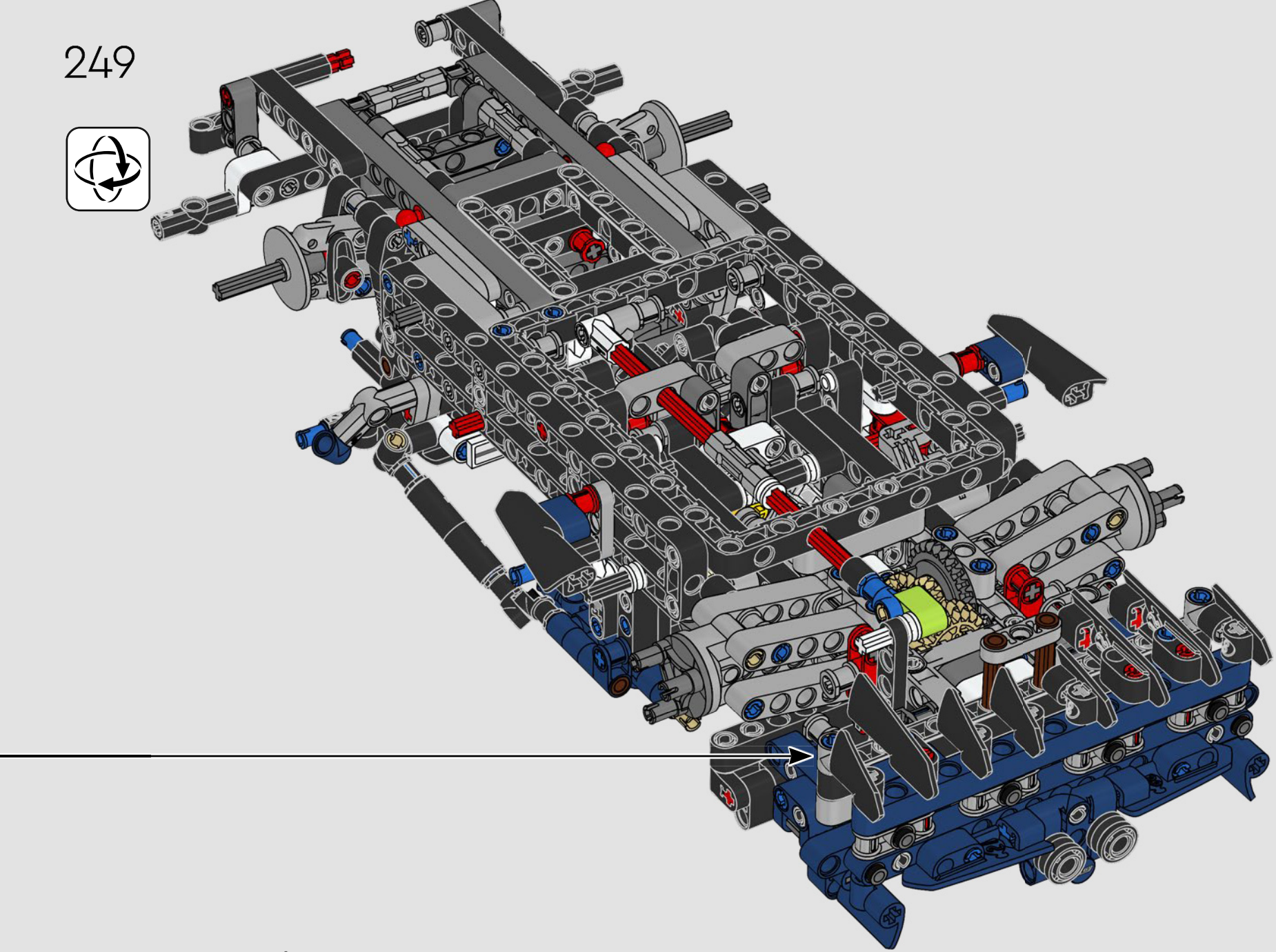

250

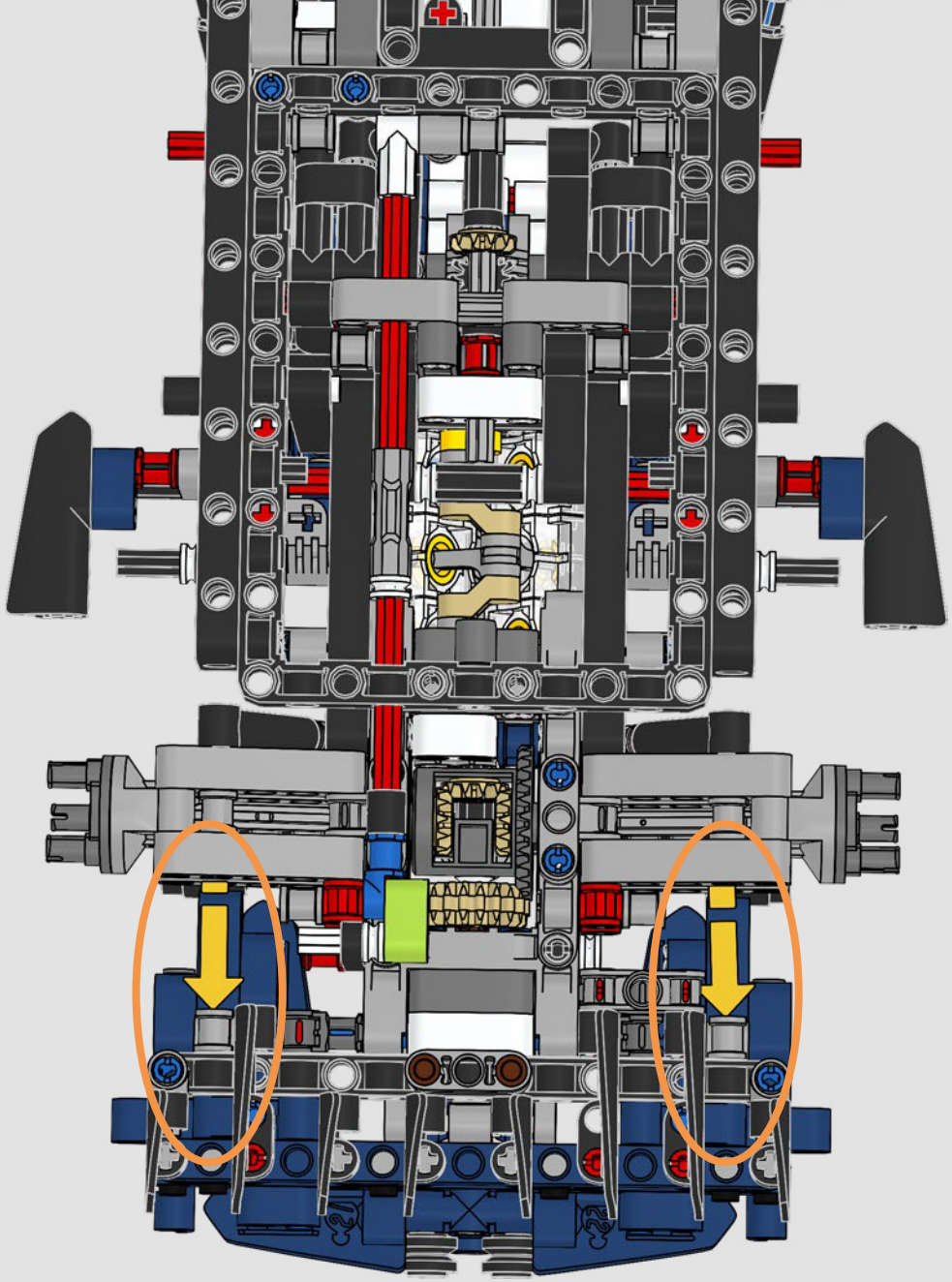

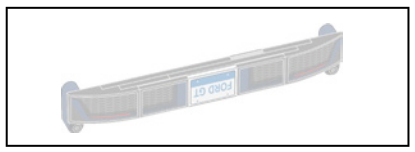

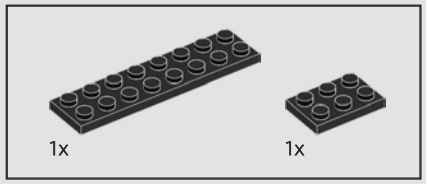

251

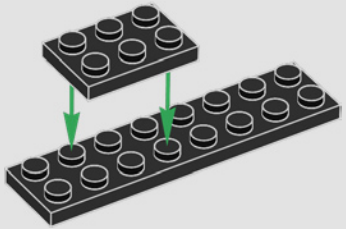

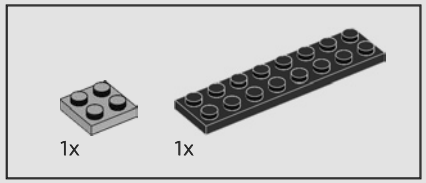

252

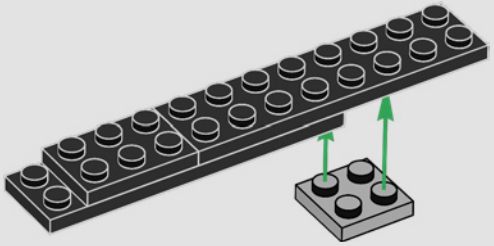

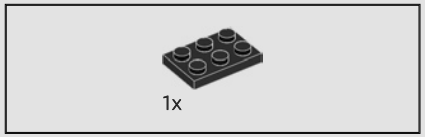

253

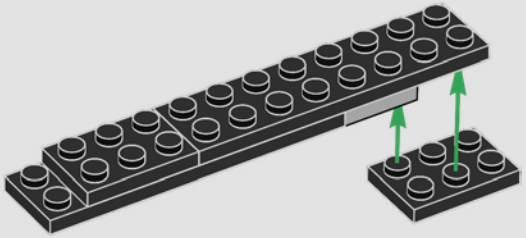

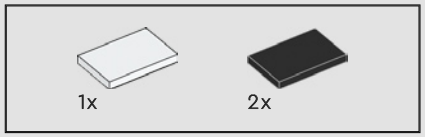

254

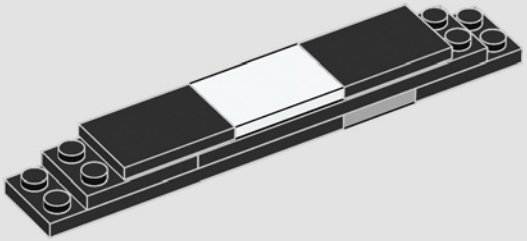

255

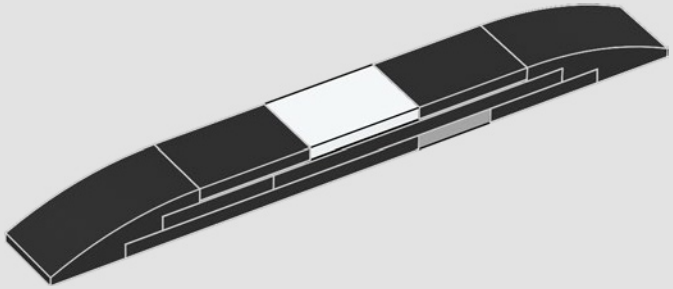

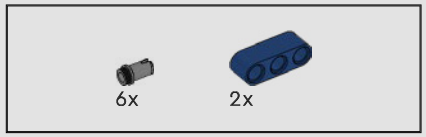

256

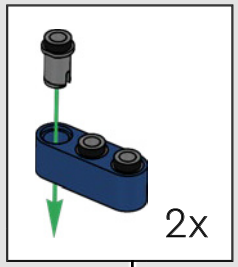

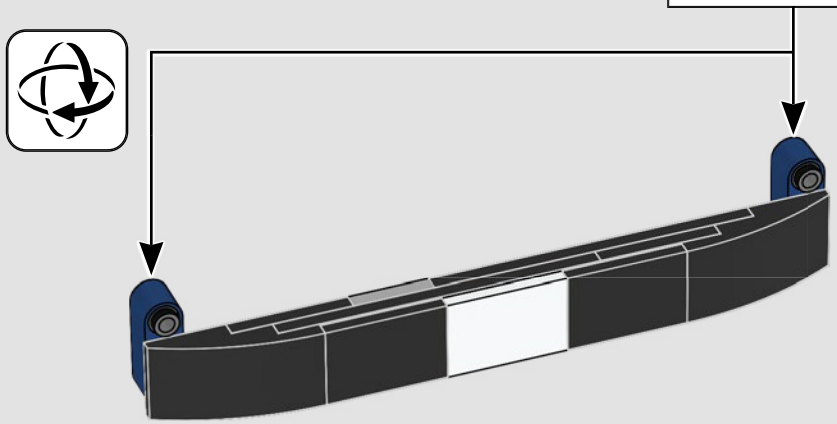

257

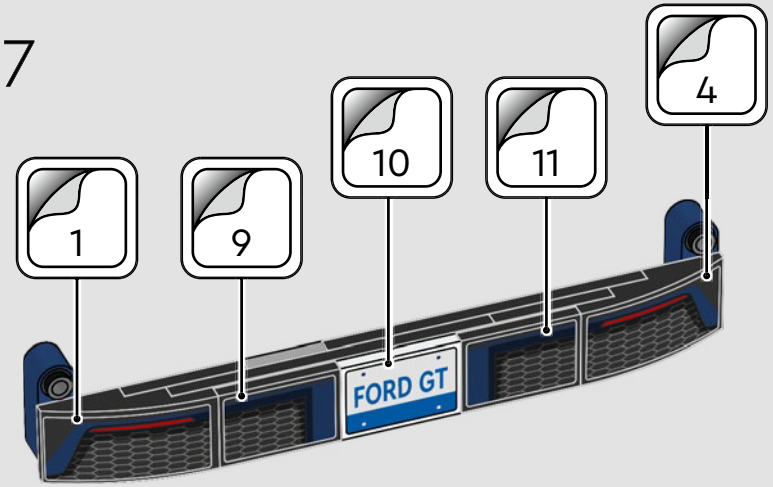

258

259

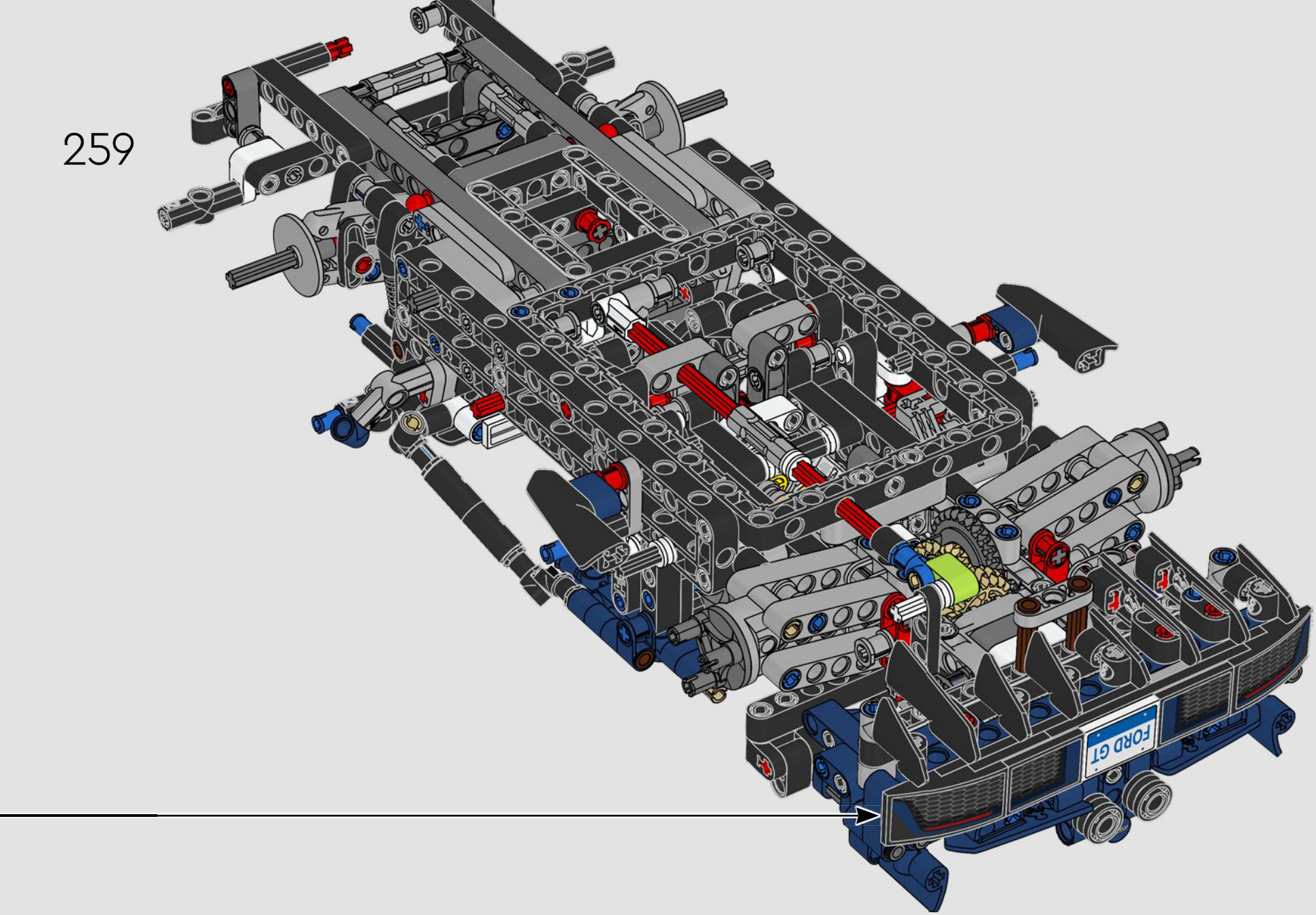

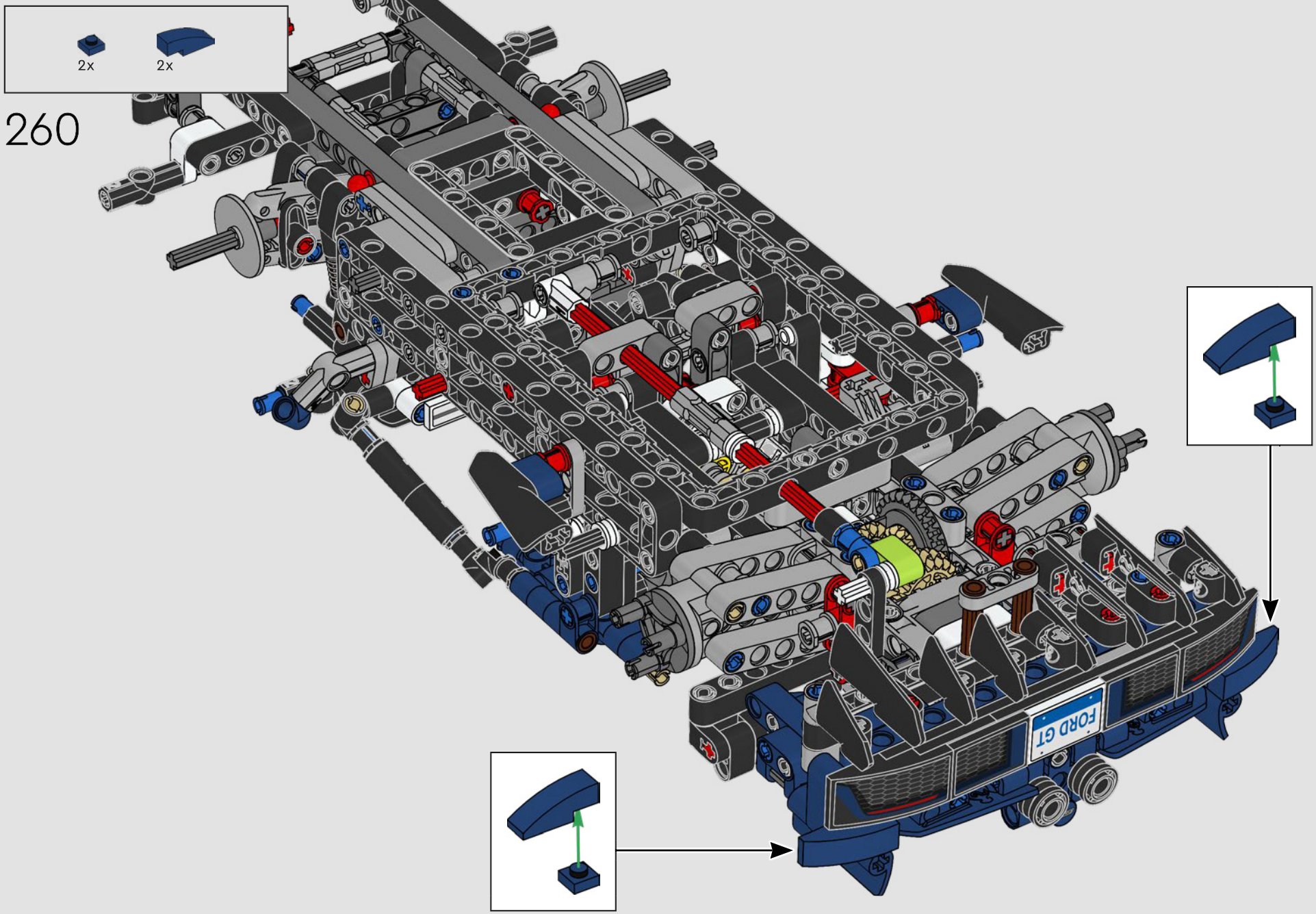
2x
2x
260
FORD GT

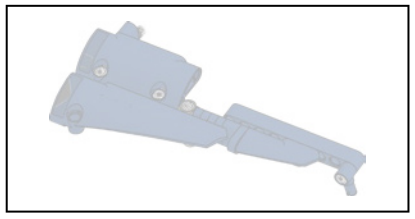

261

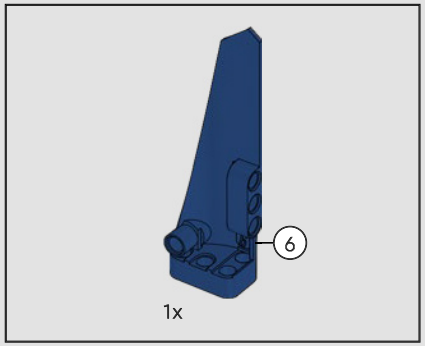

262

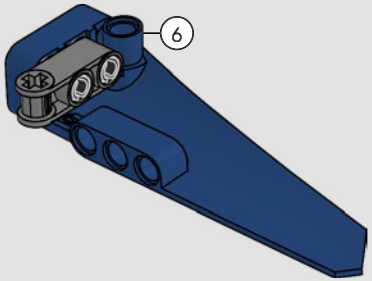

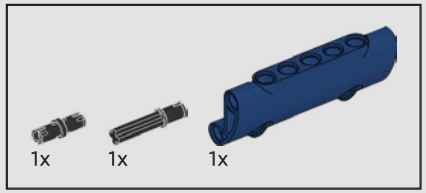

263

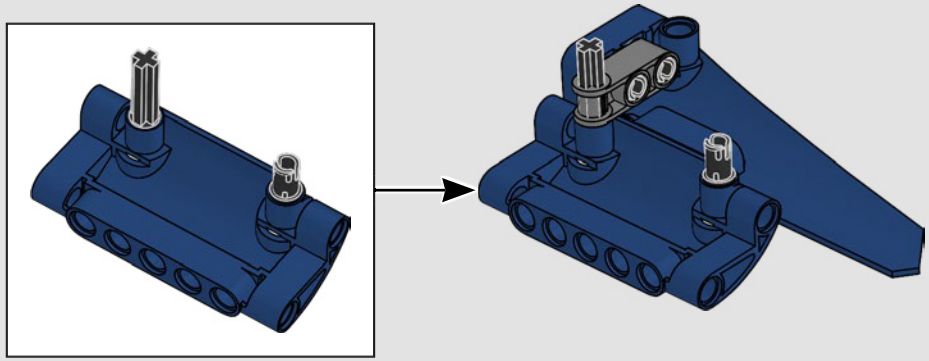

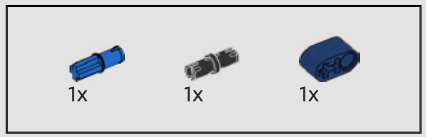

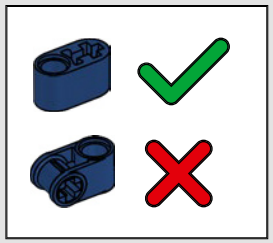

264

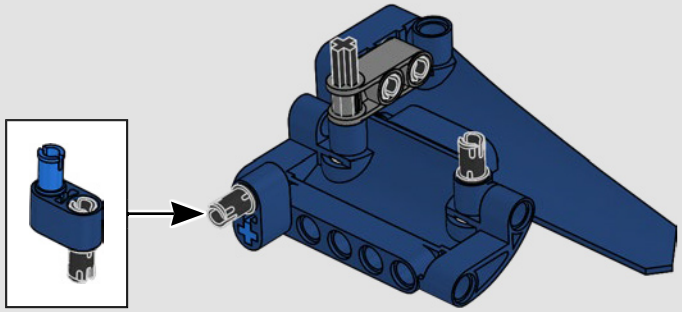

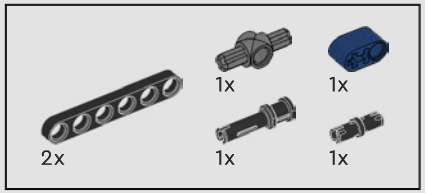

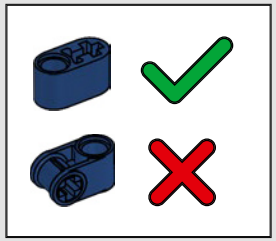

265

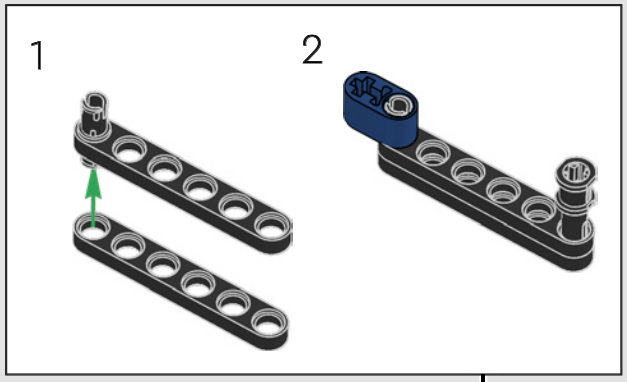

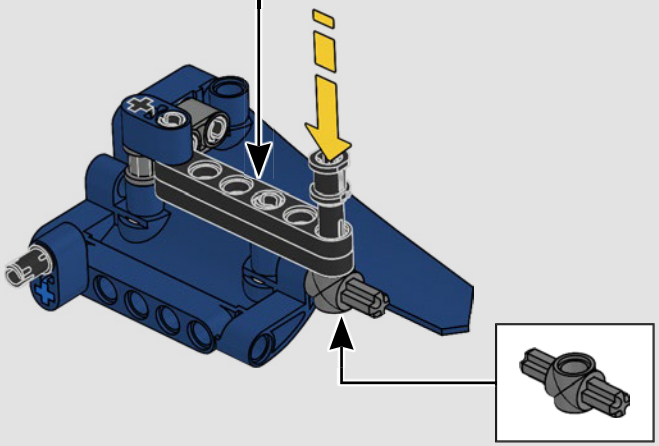

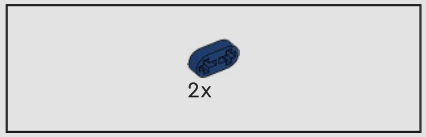

266

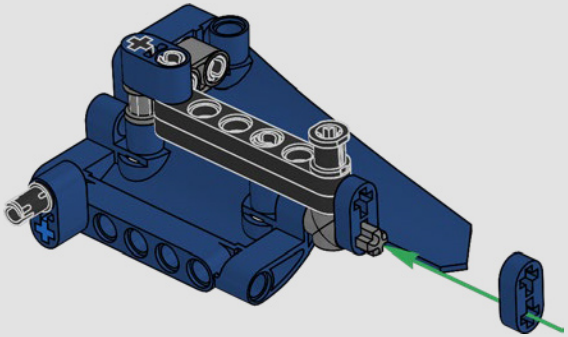

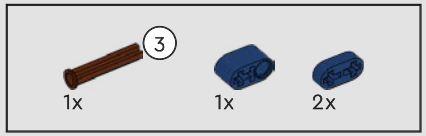

267

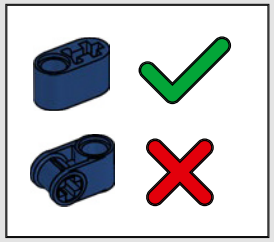

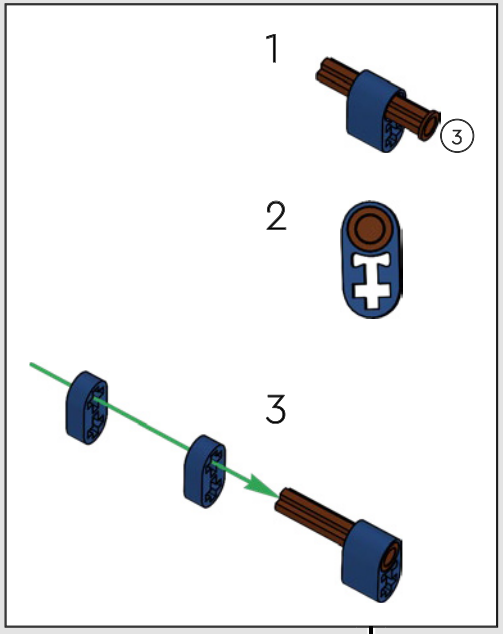

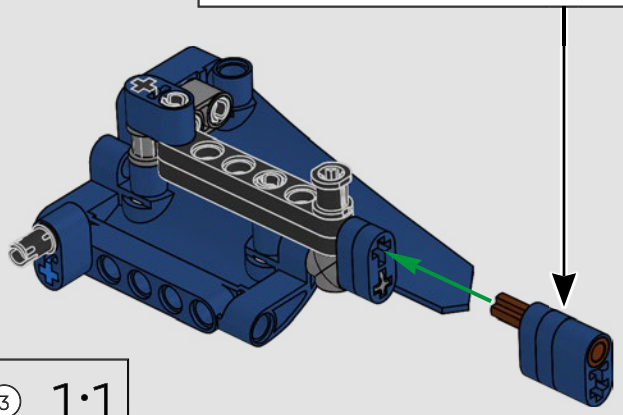

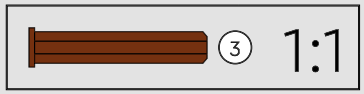

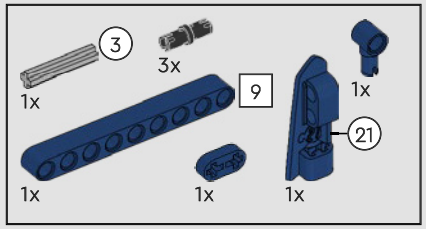

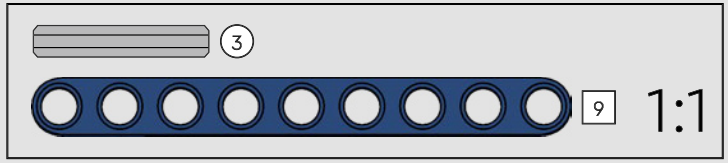

268

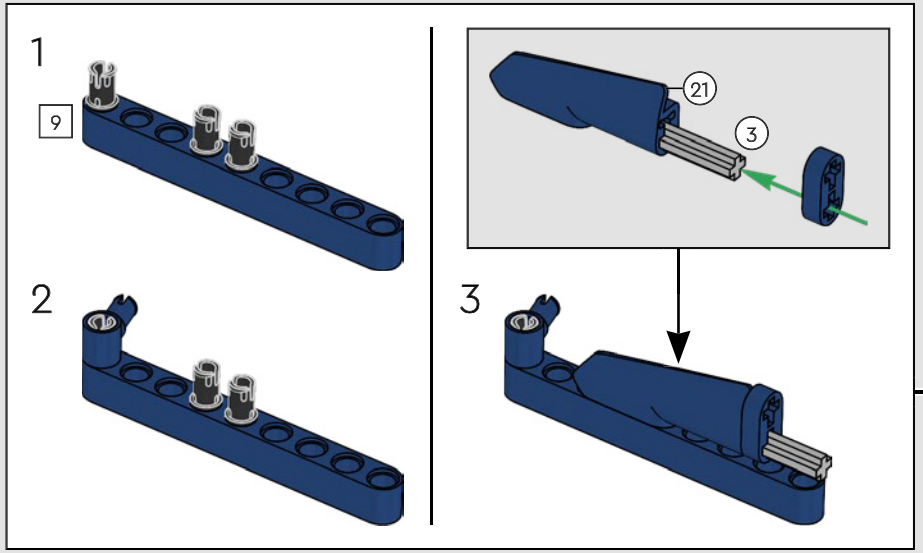

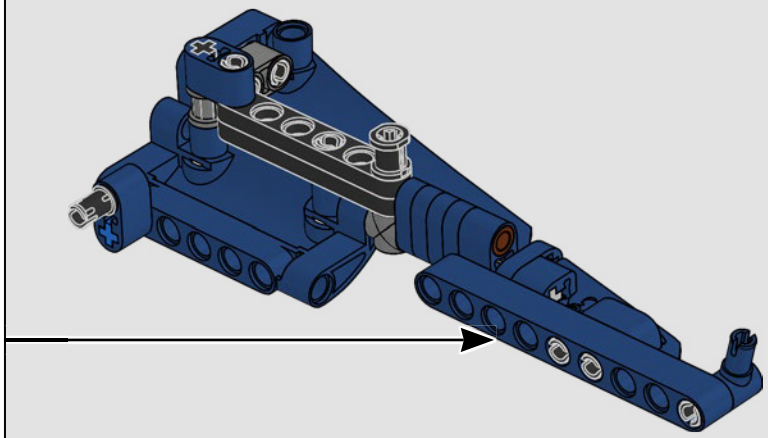

269

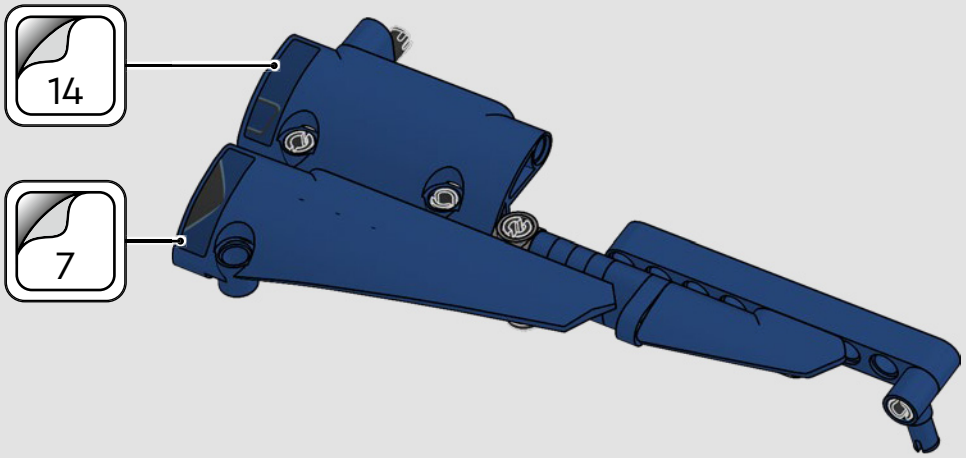

270

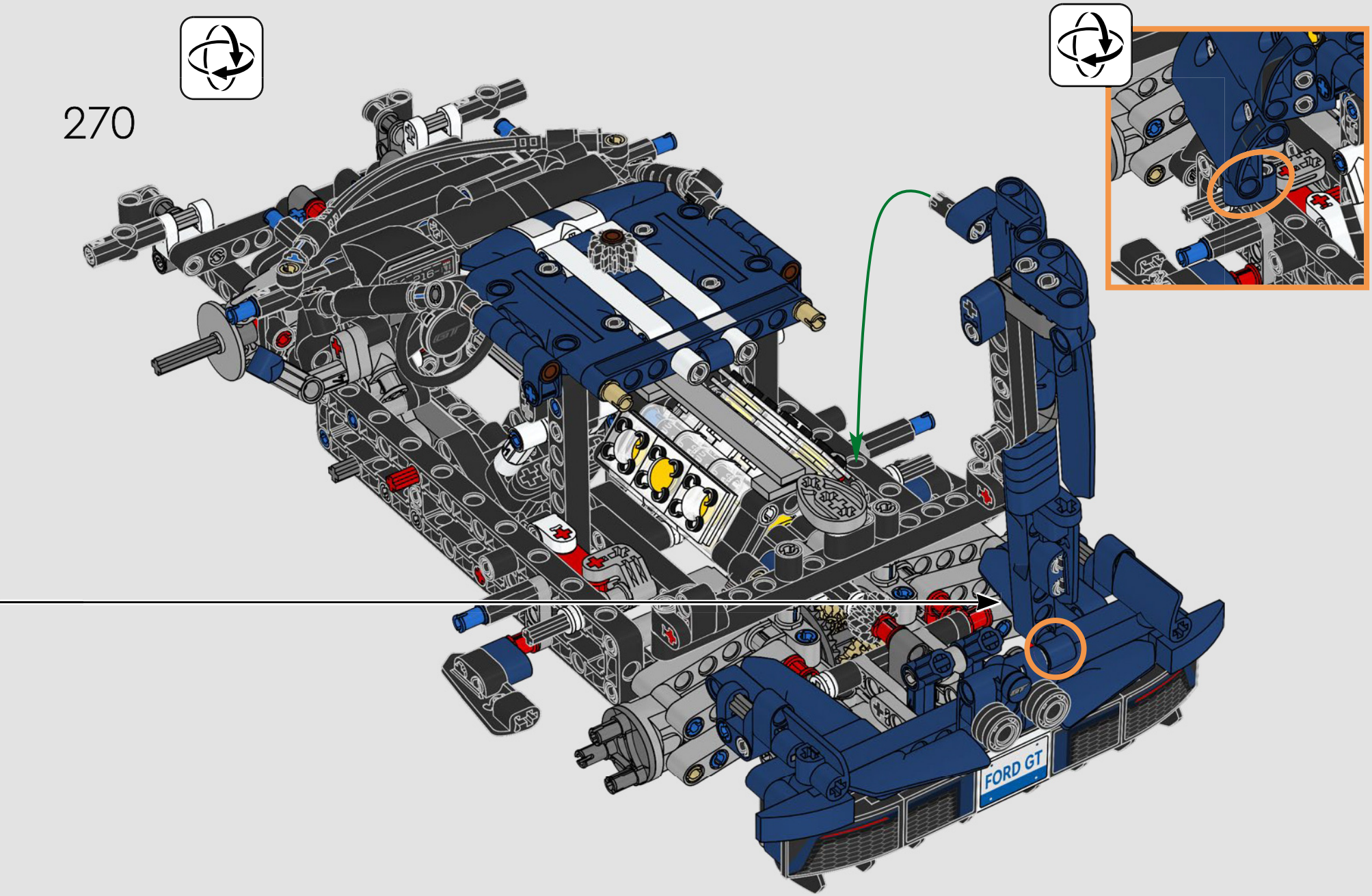

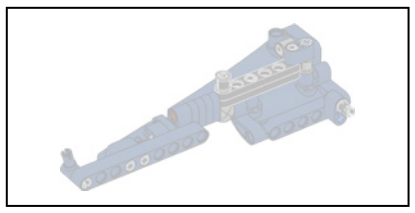

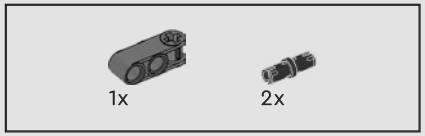

271

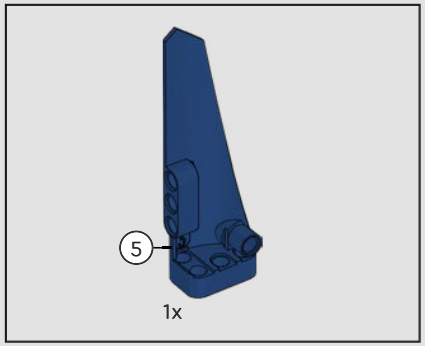

272

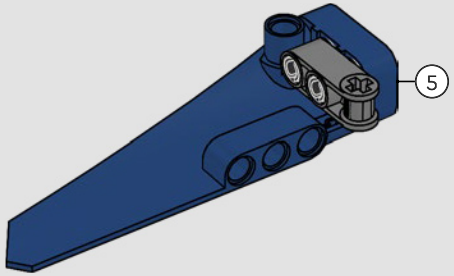

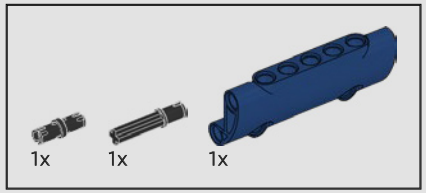

273

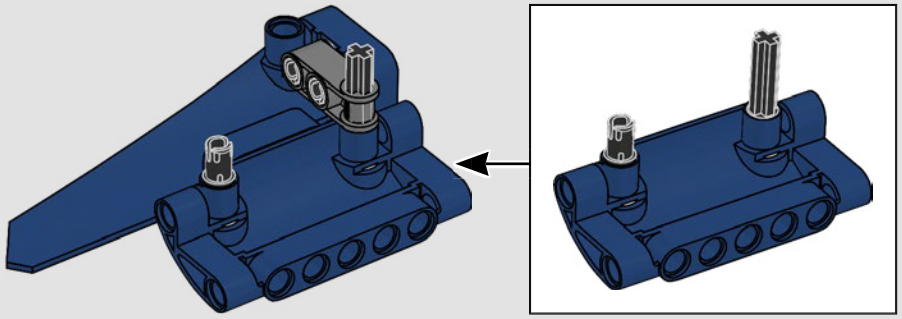

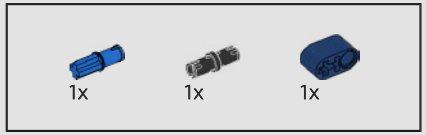

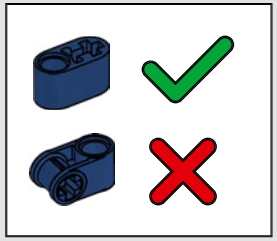

274

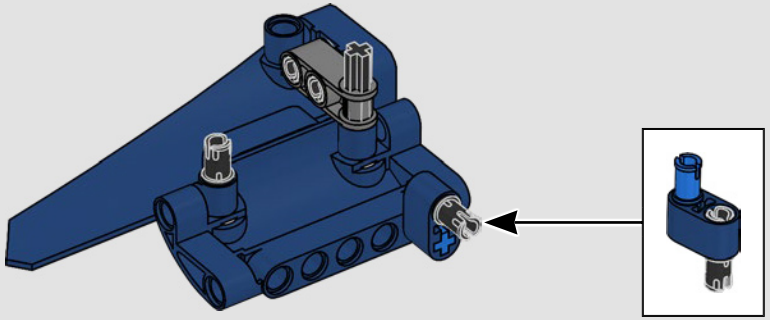

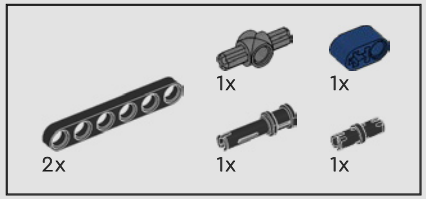

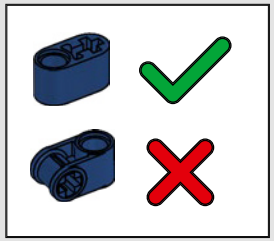

275

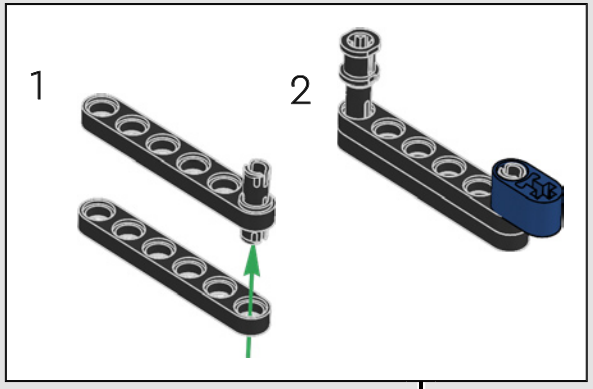

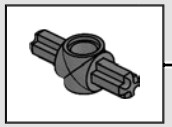

276

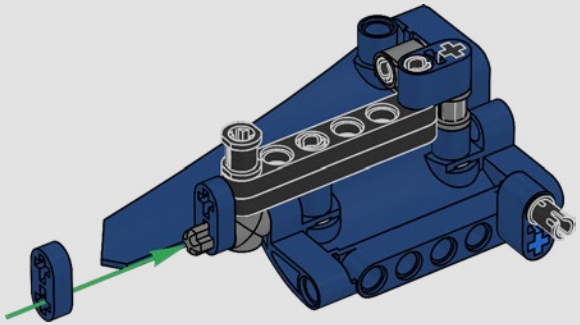

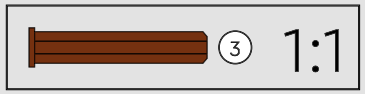

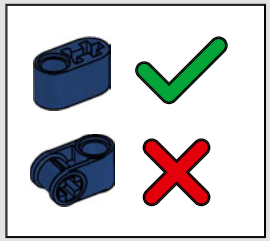

277

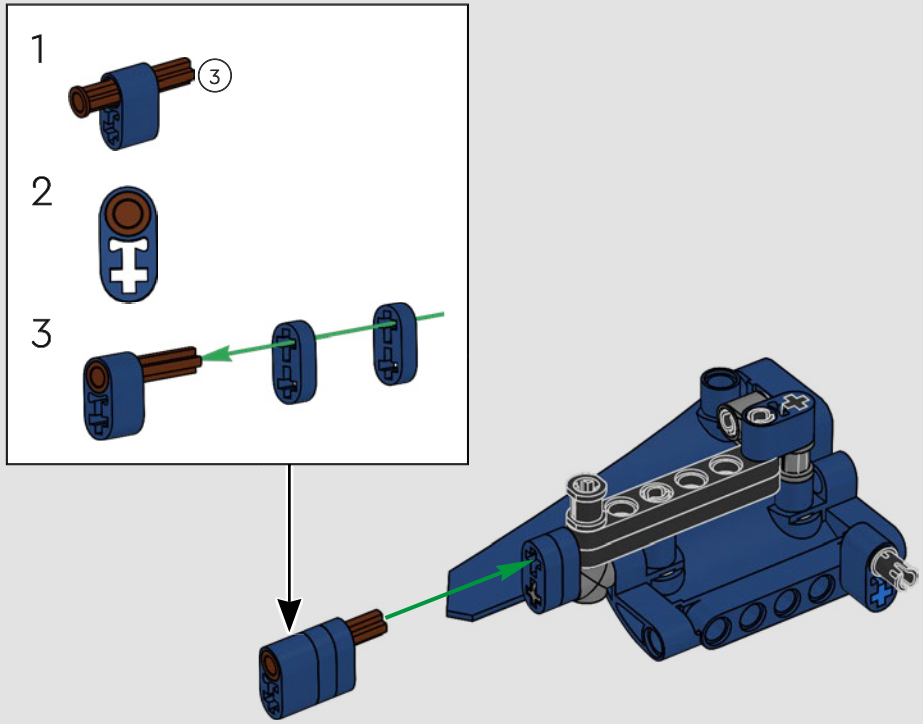

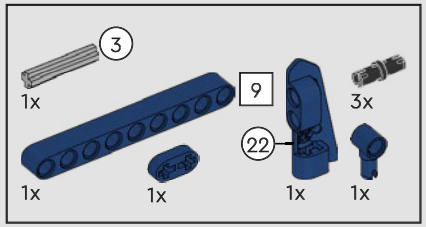

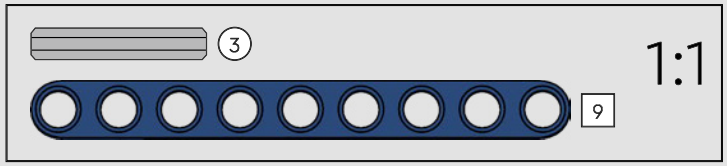

278

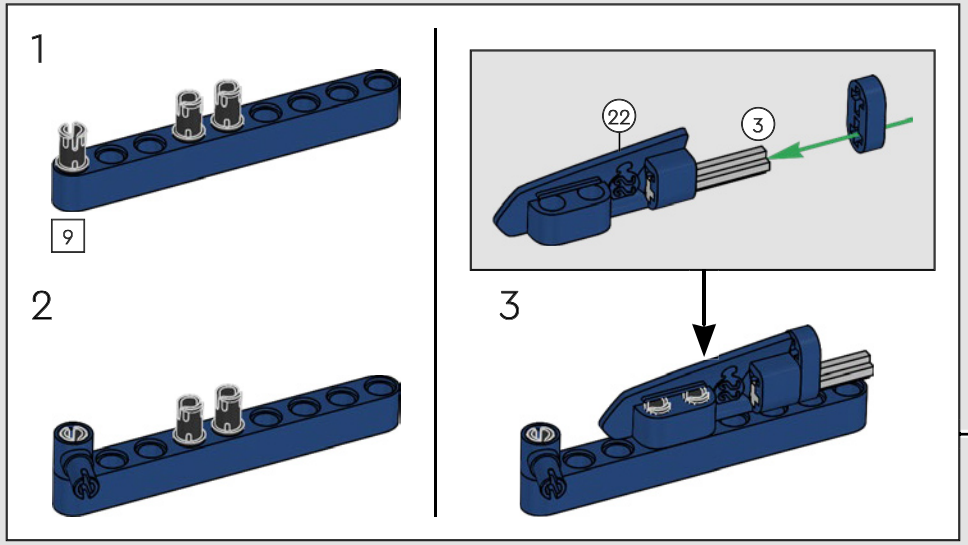

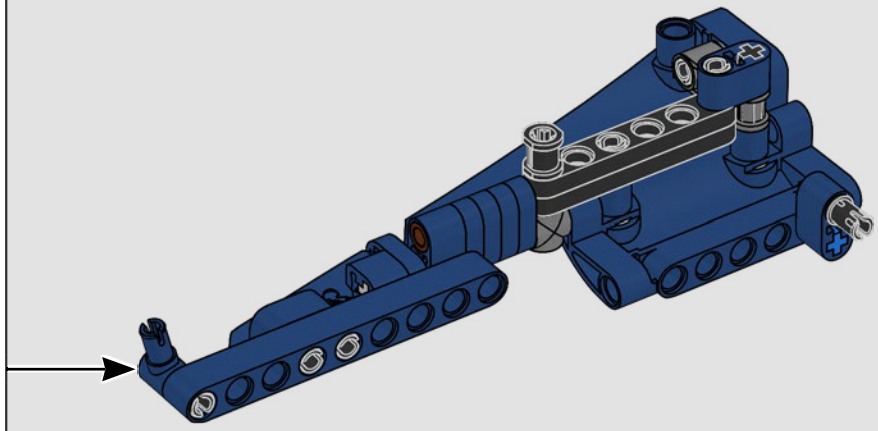

279

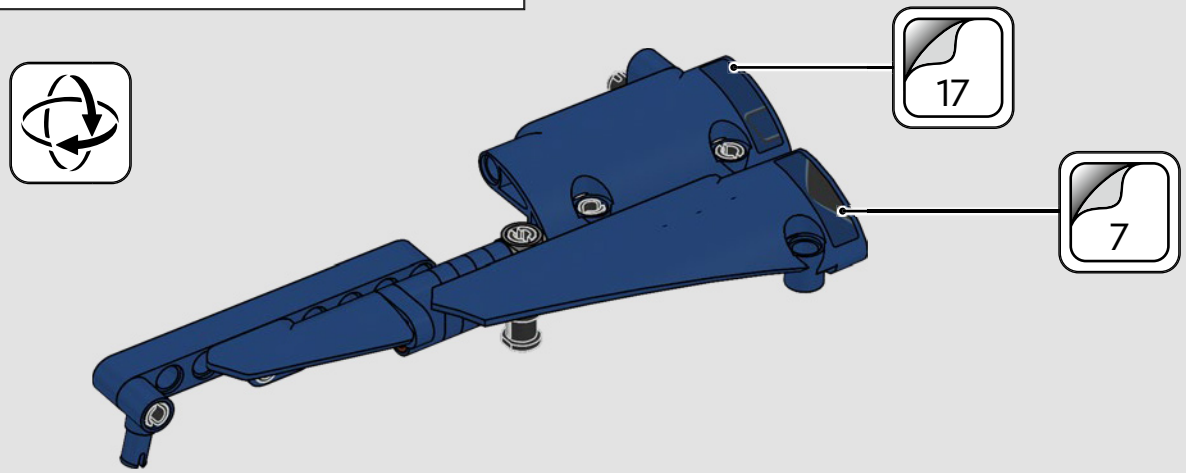

280

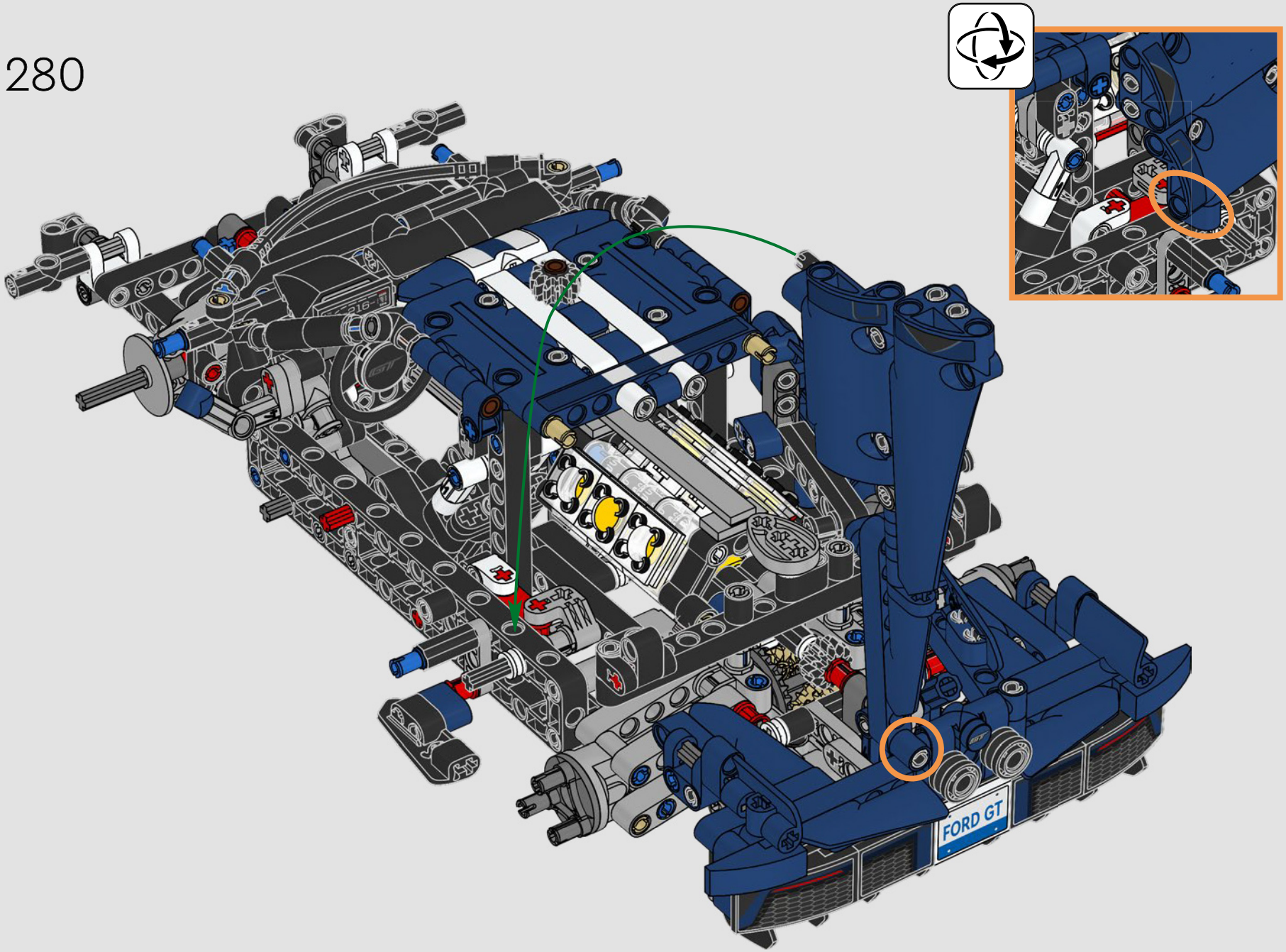

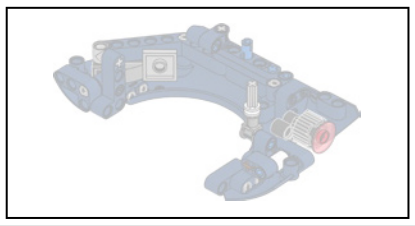

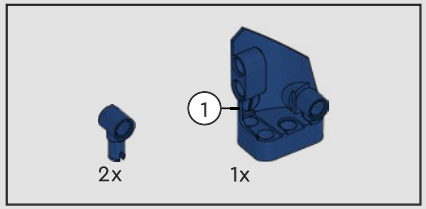

281

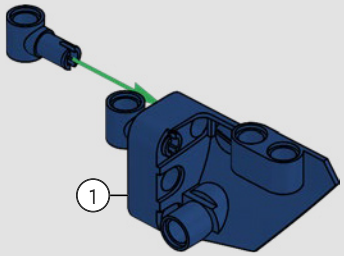

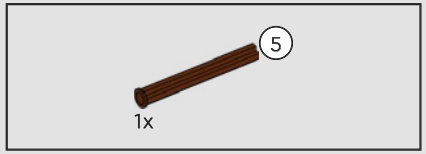

282

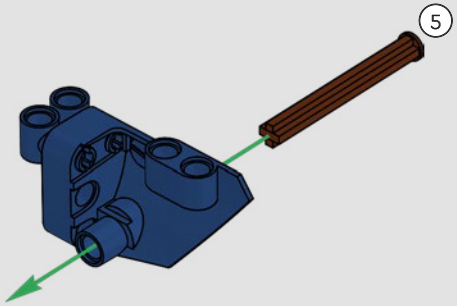

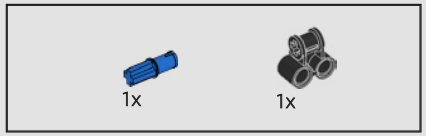

283

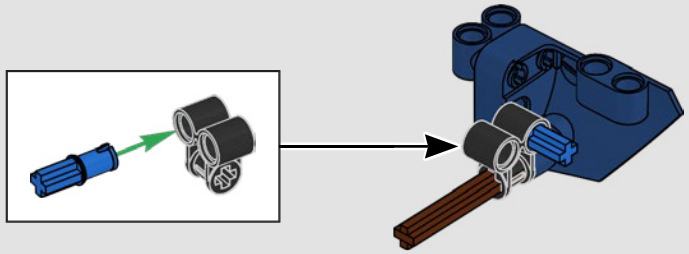

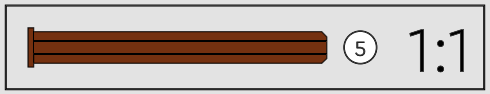

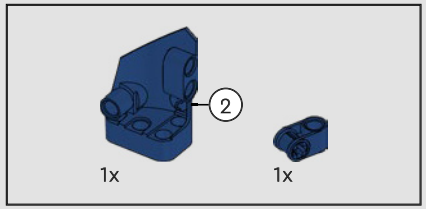

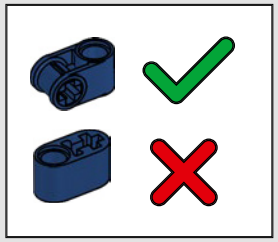

284

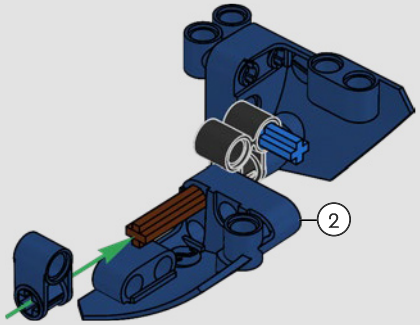

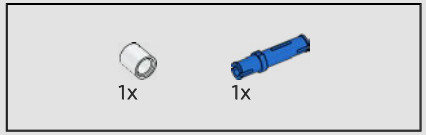

285

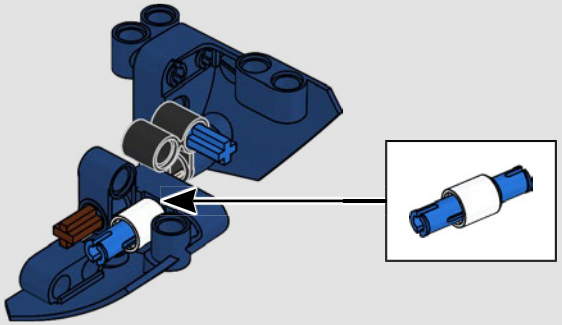

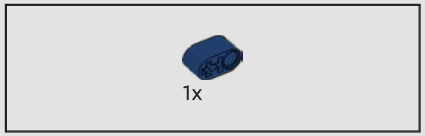

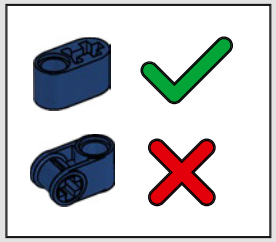

286

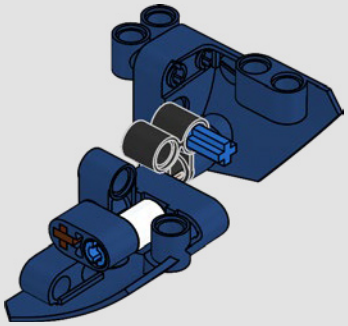

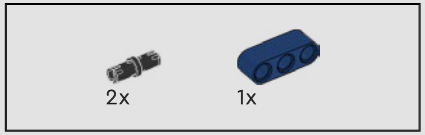

287

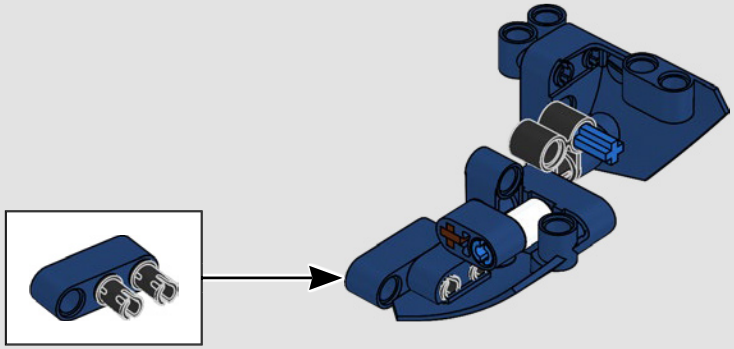

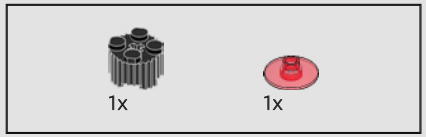

288

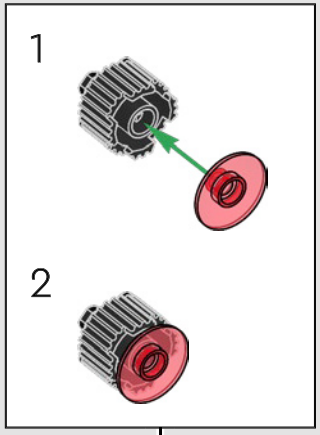

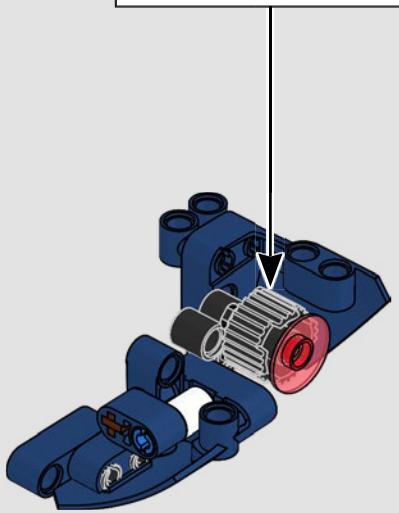

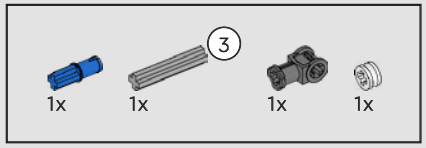

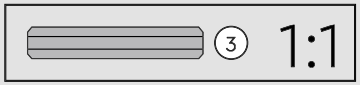

289

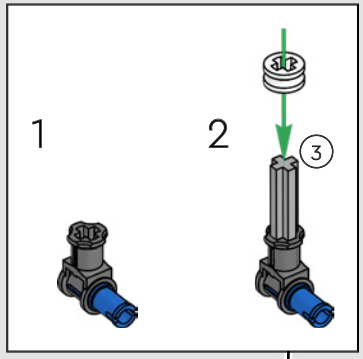

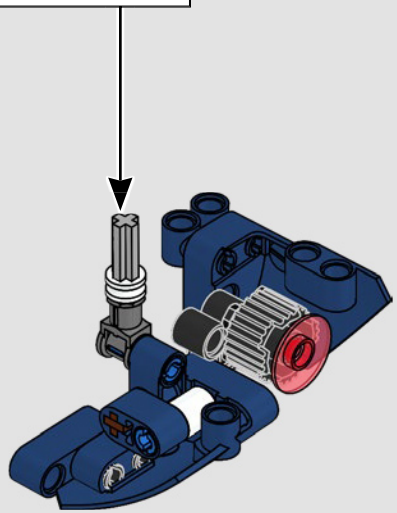

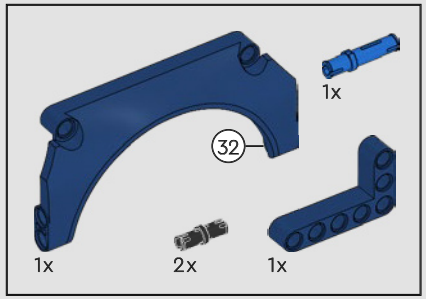

290

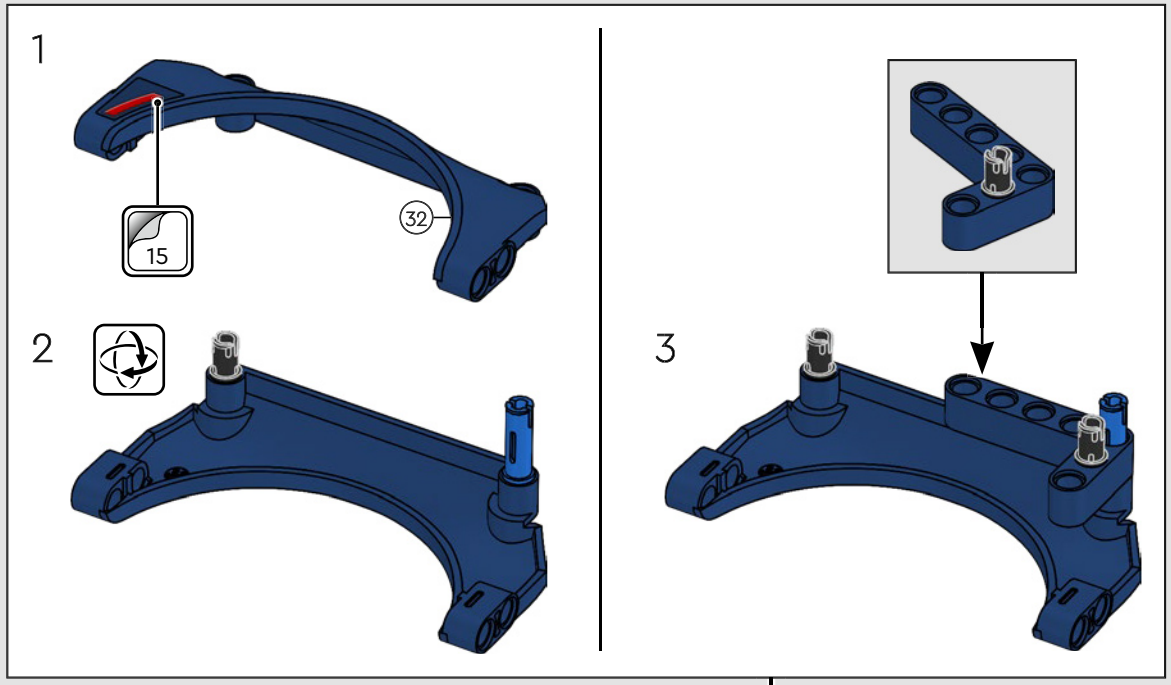

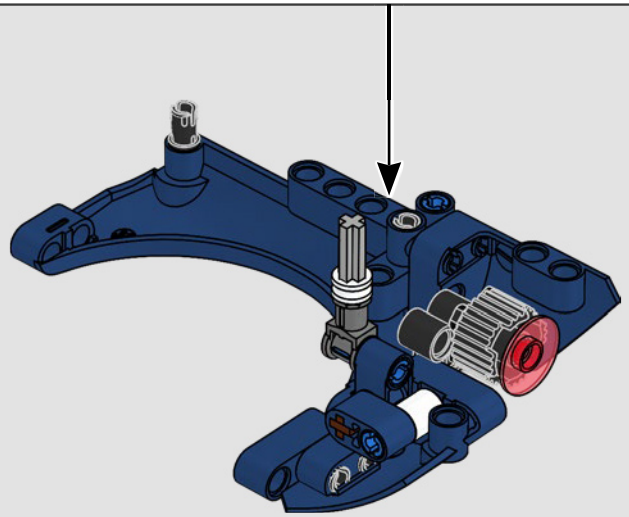

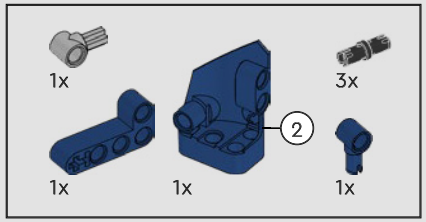

291

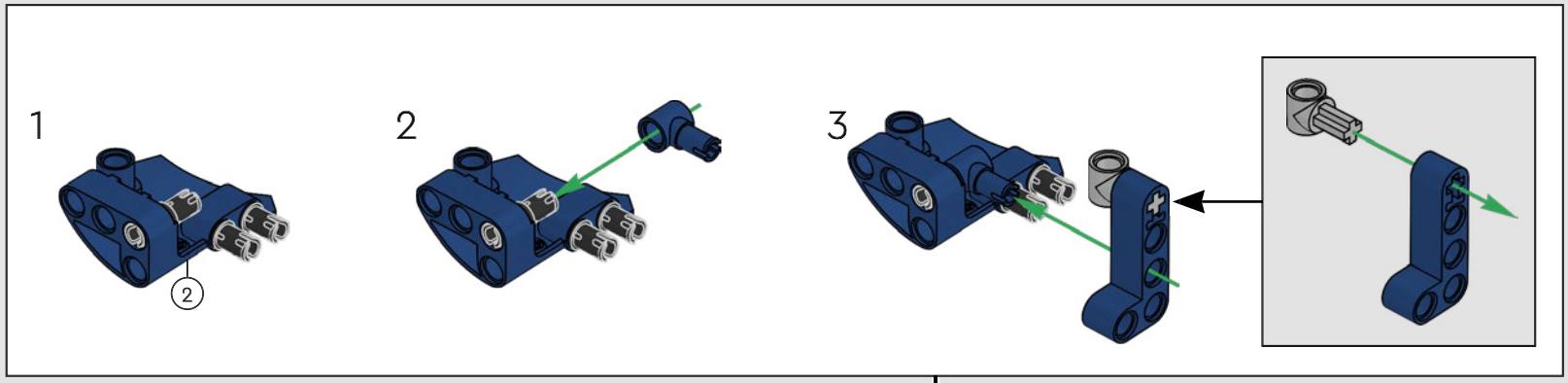

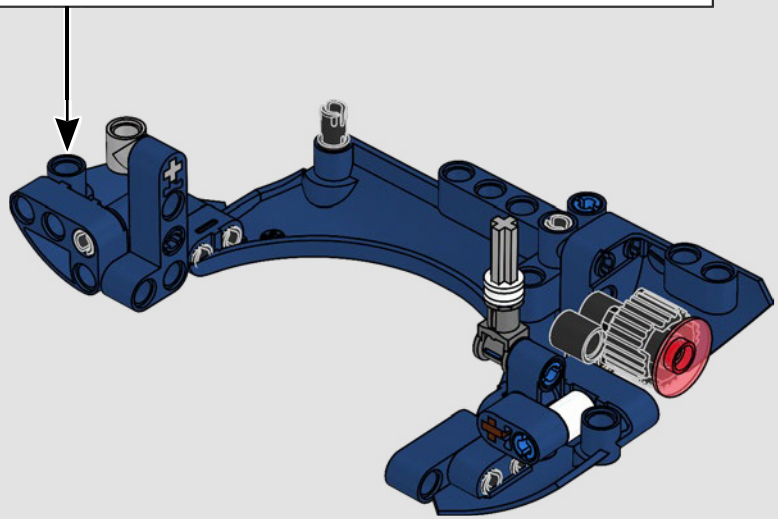

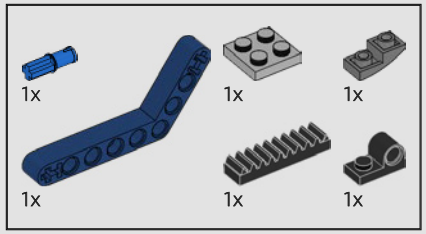

292

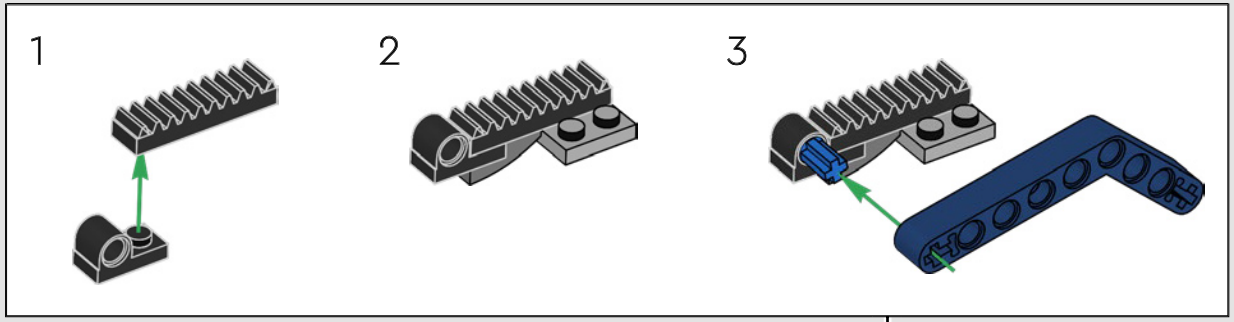

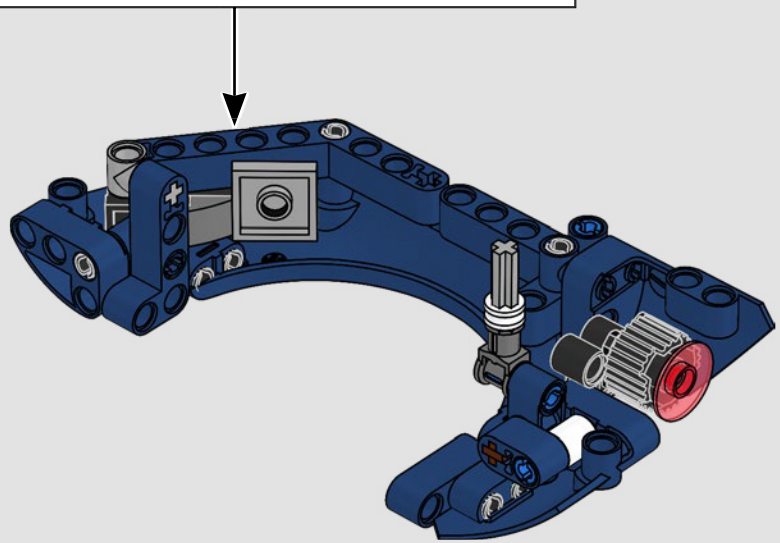

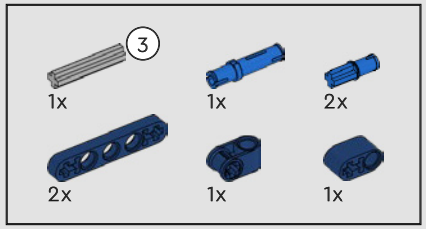

293

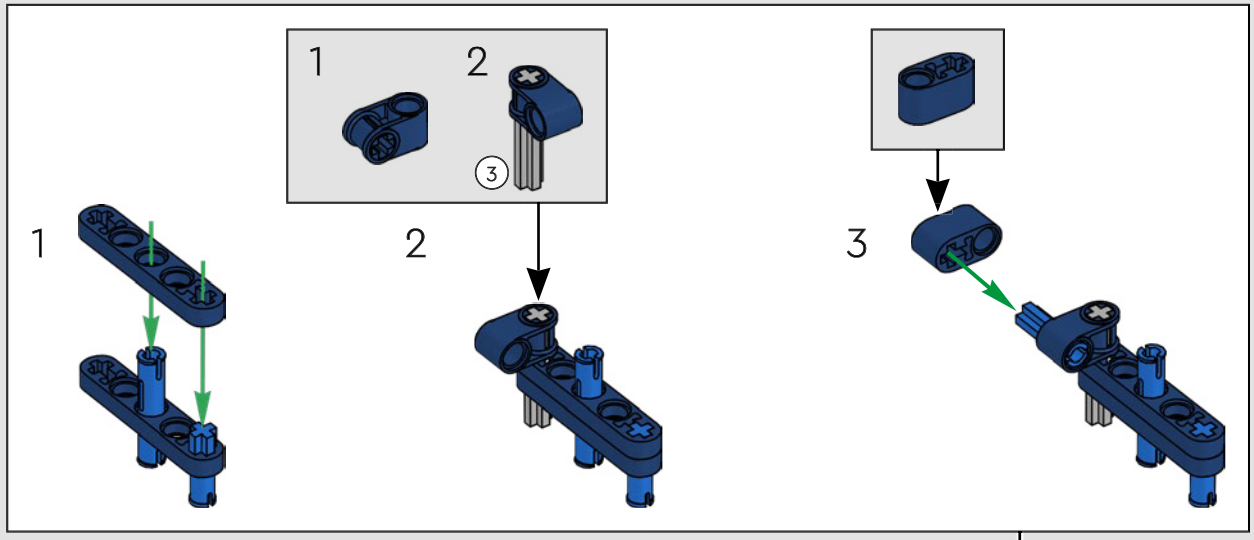

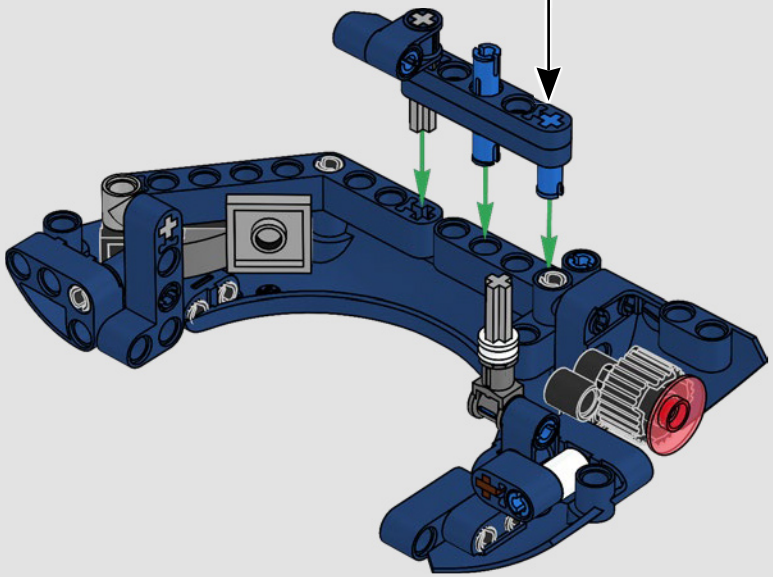

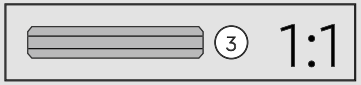

294

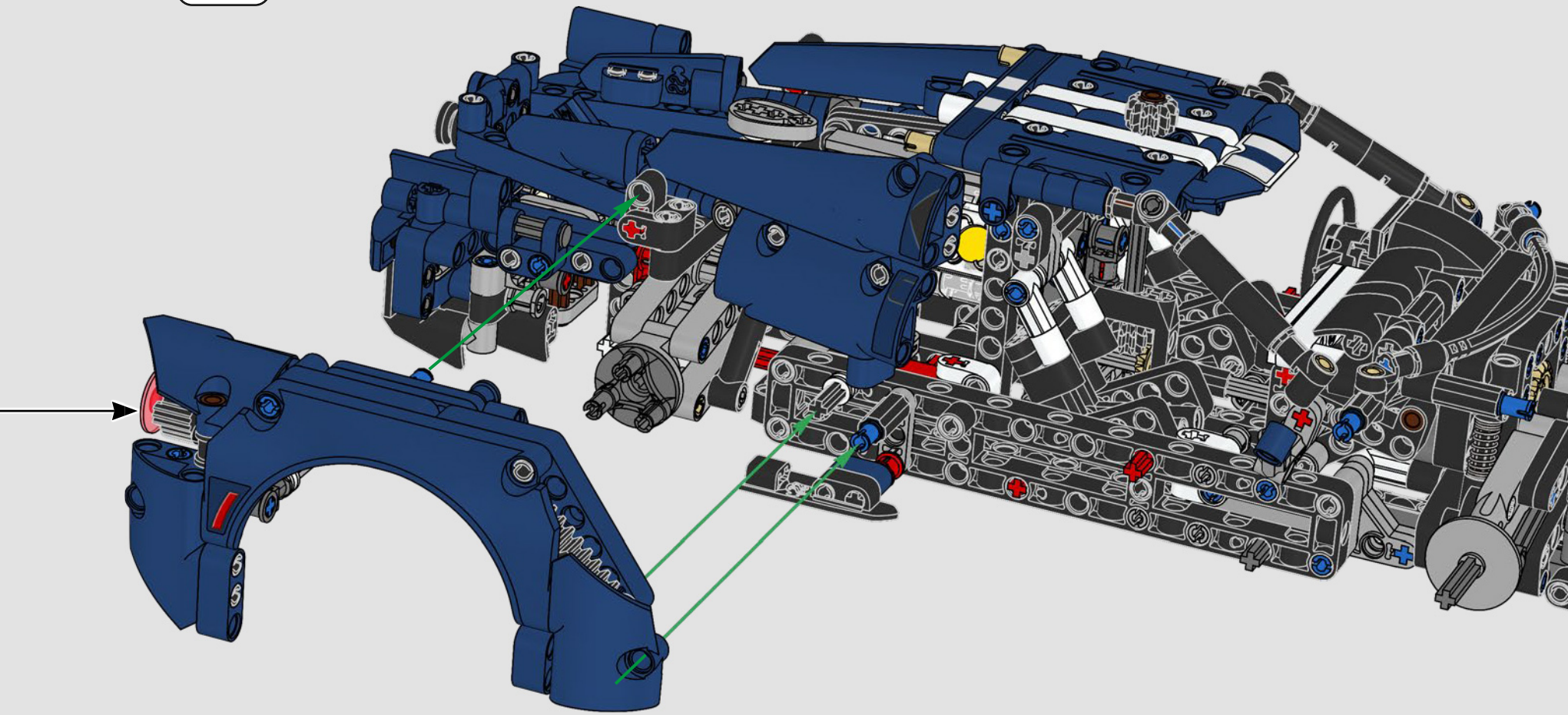

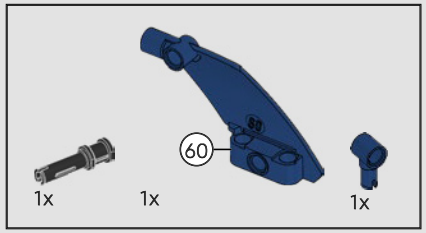

295

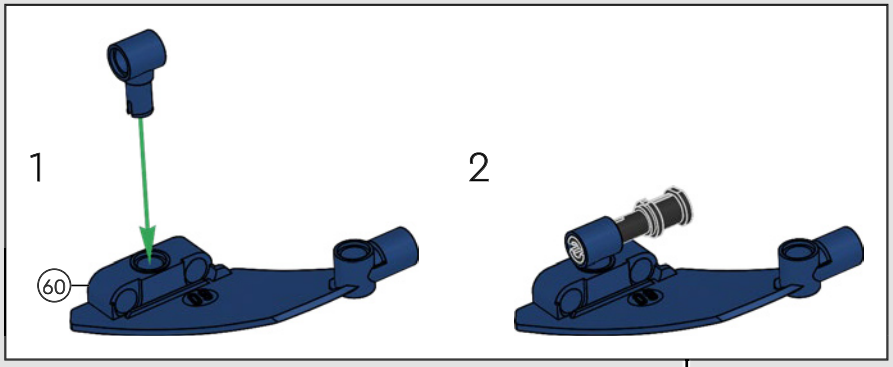

296

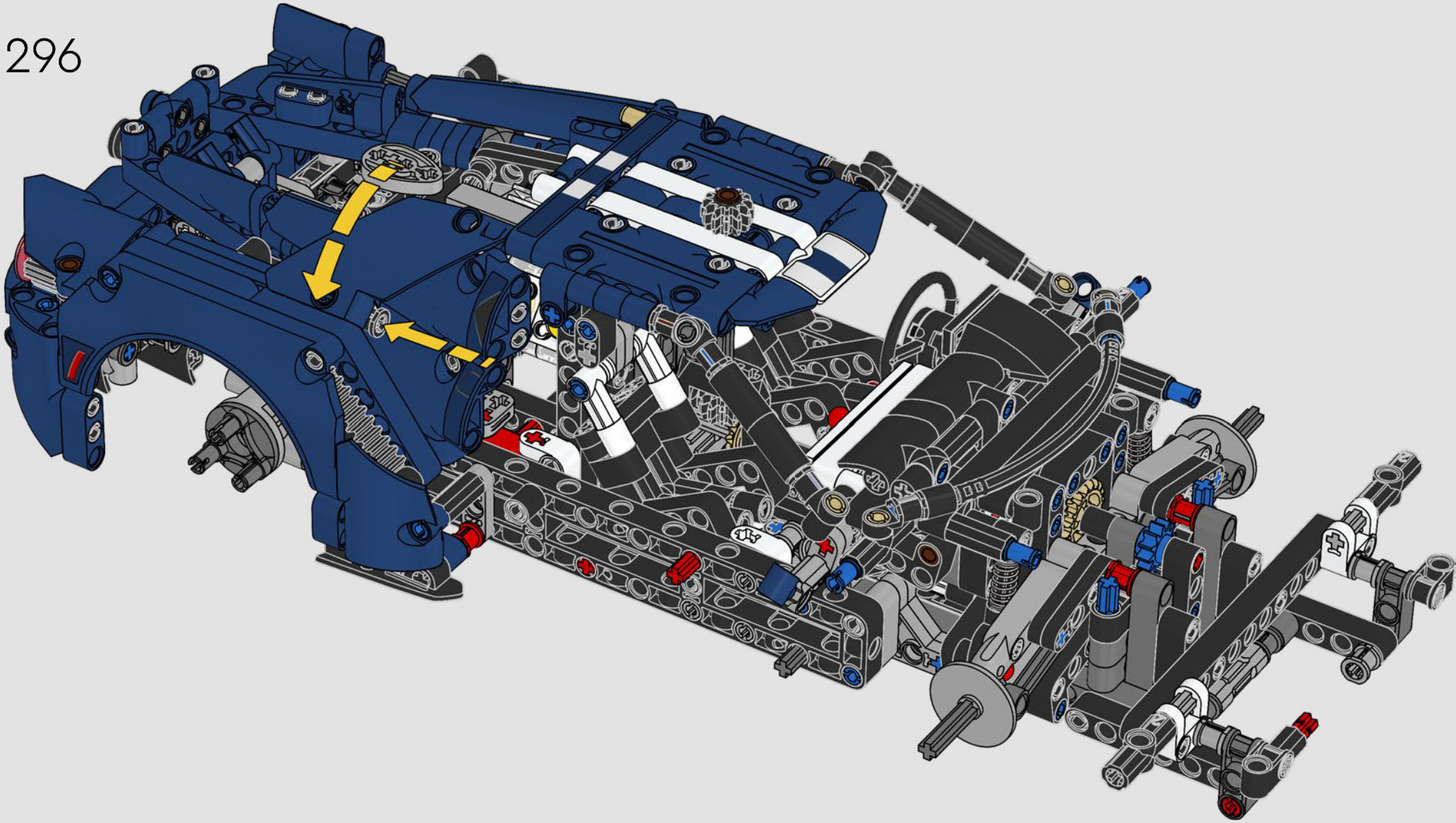

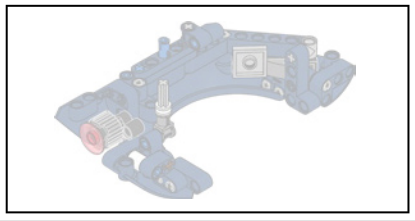

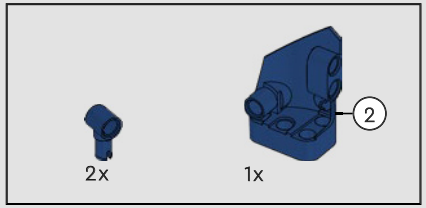

297

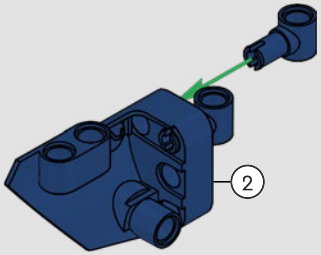

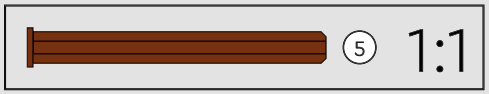

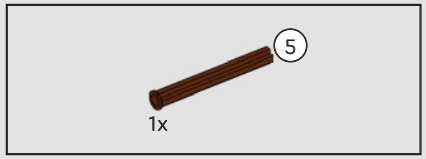

298

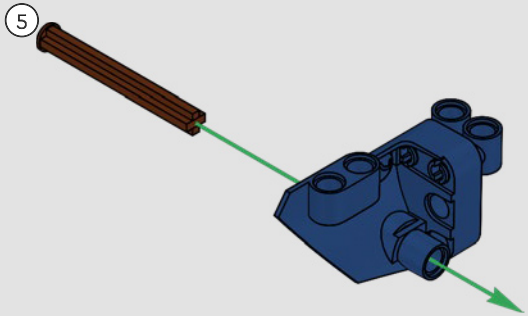

299

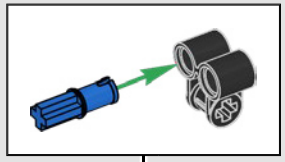

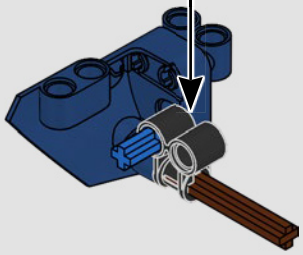

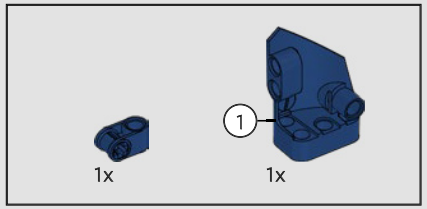

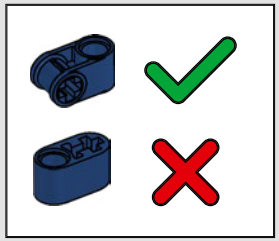

300

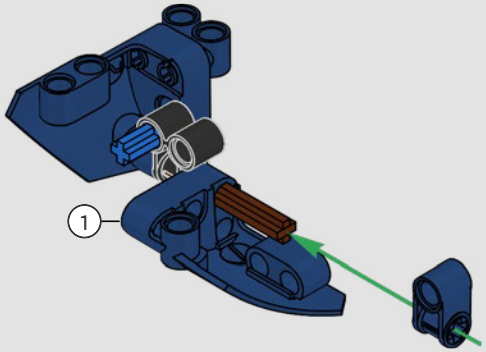

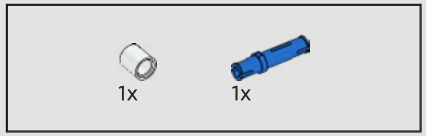

301

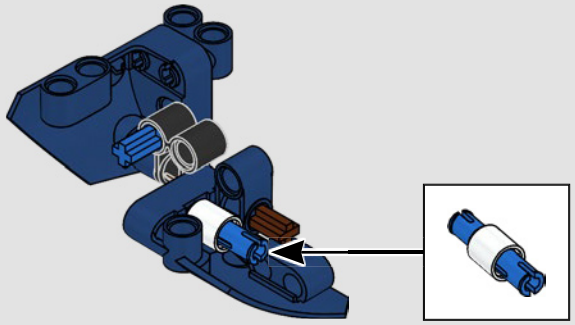

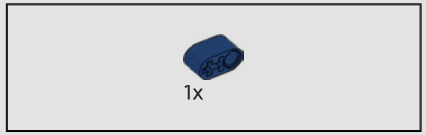

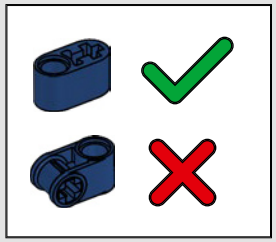

302

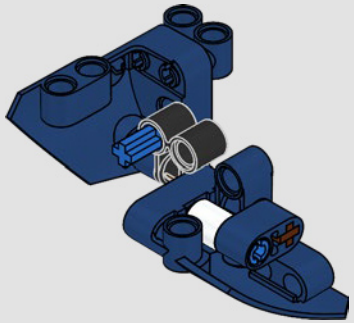

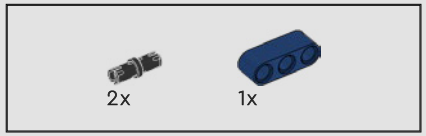

303

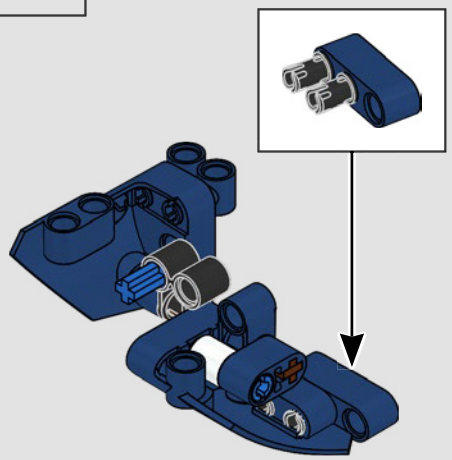

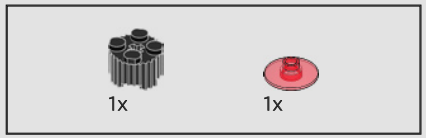

304

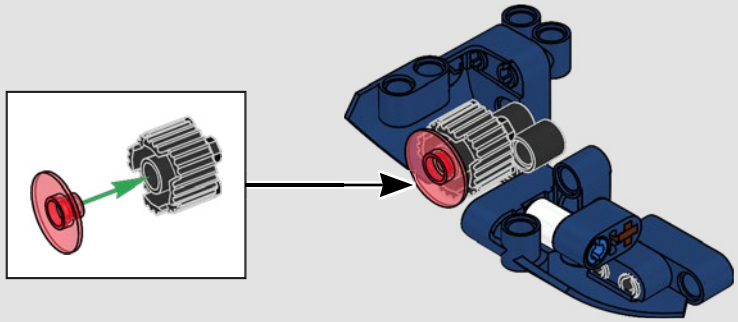

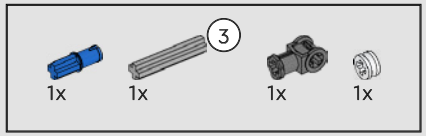

305

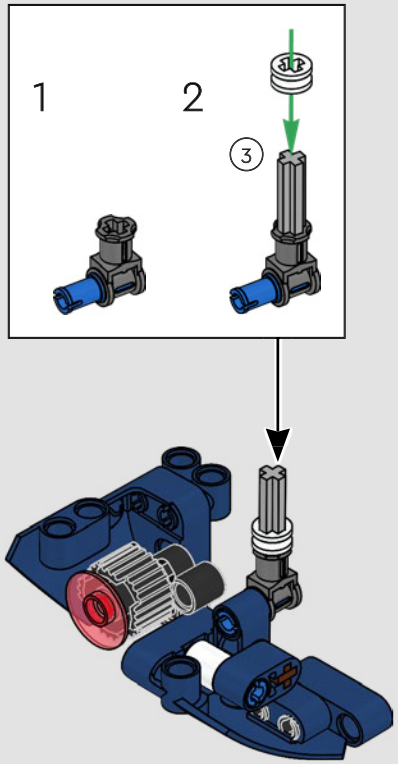

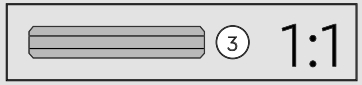

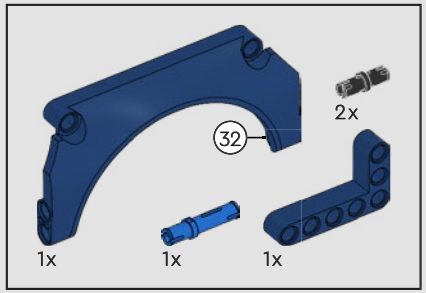

306

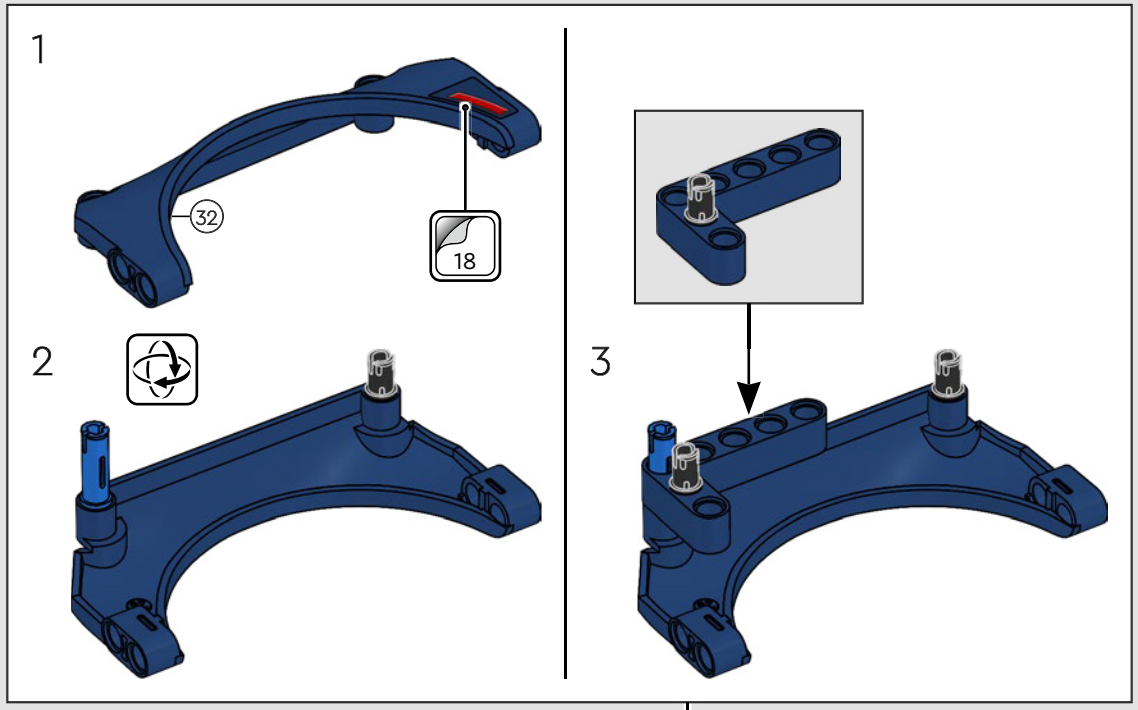

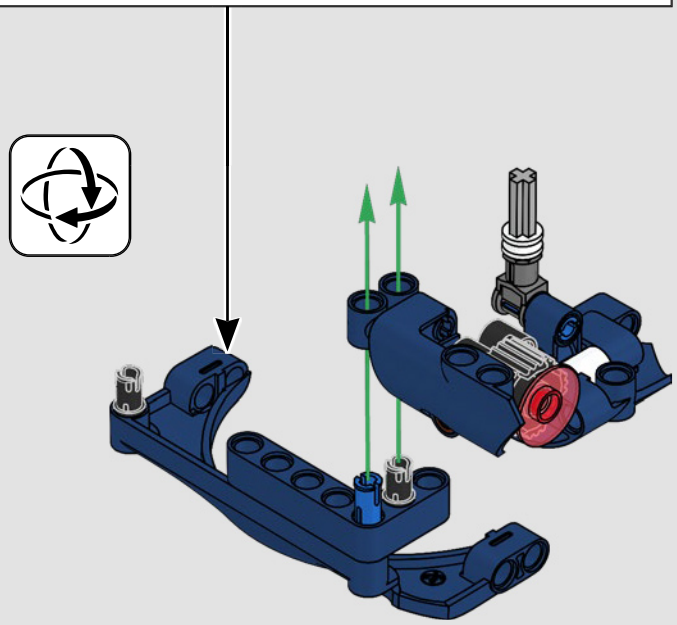

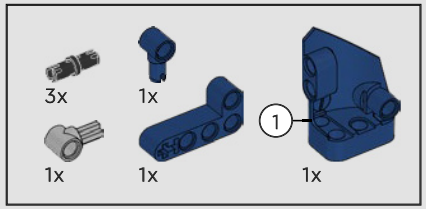

307

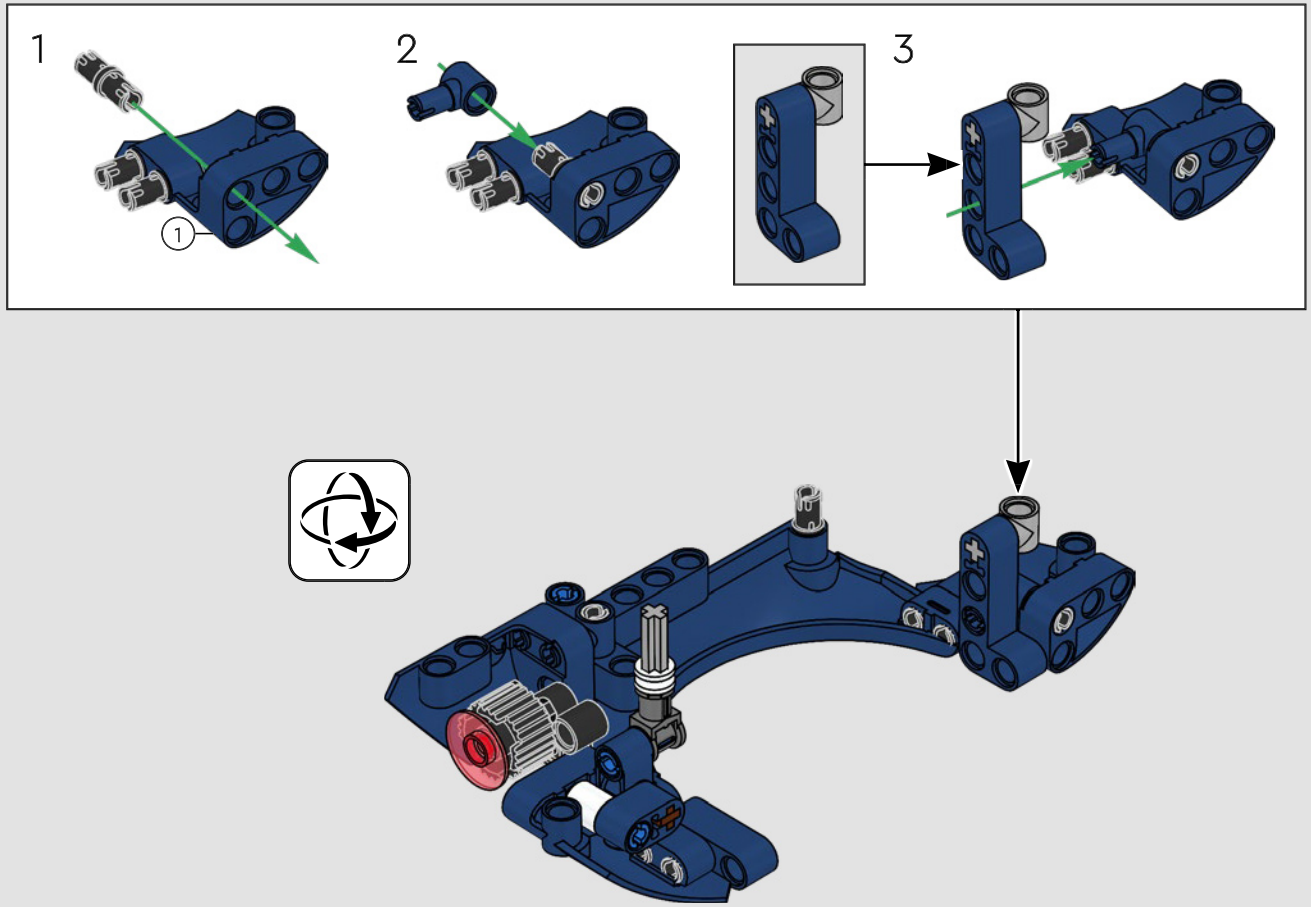

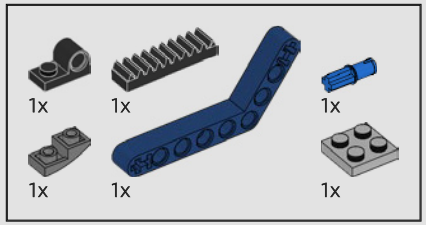

308

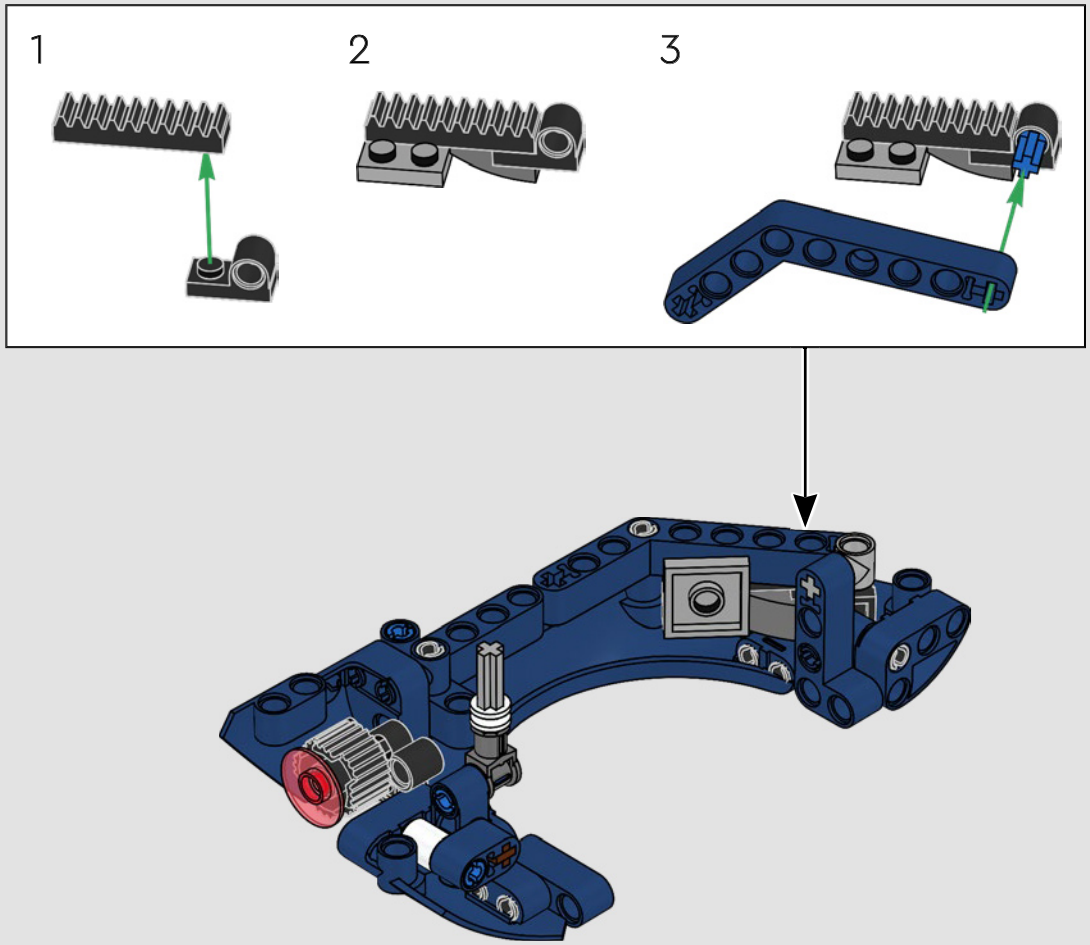

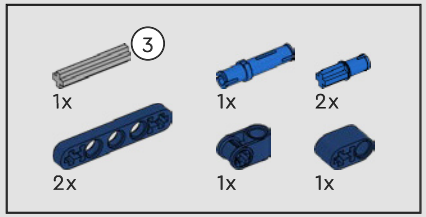

309

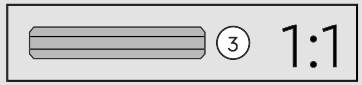

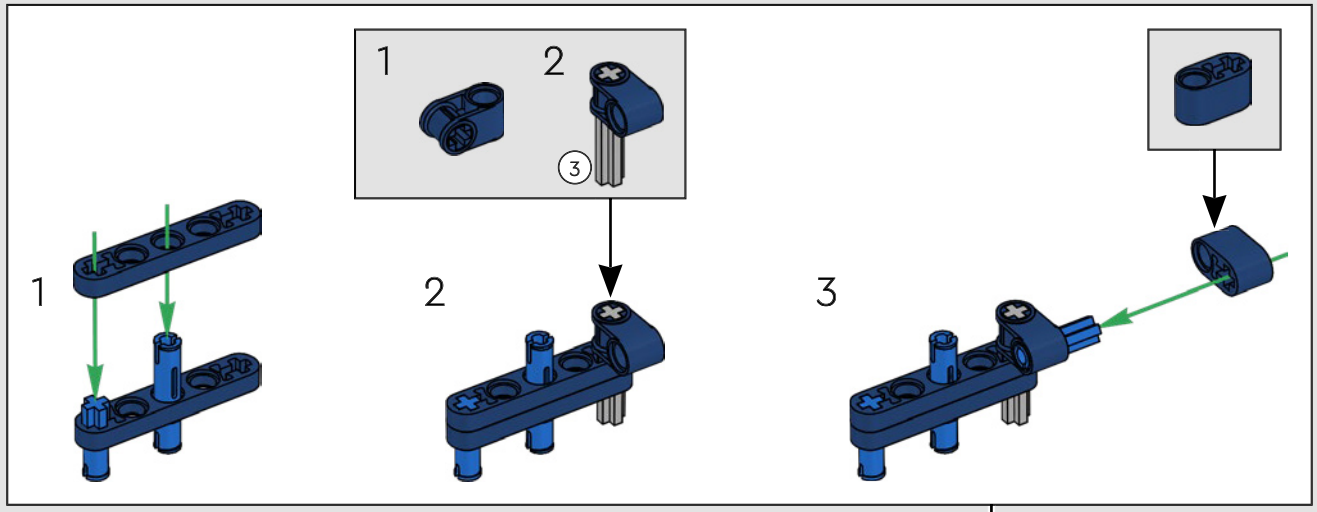

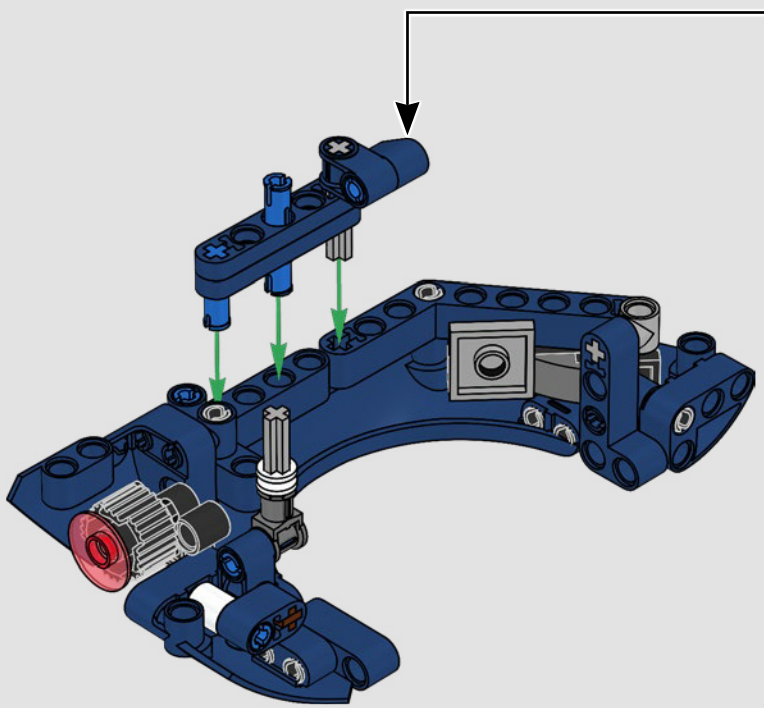

310

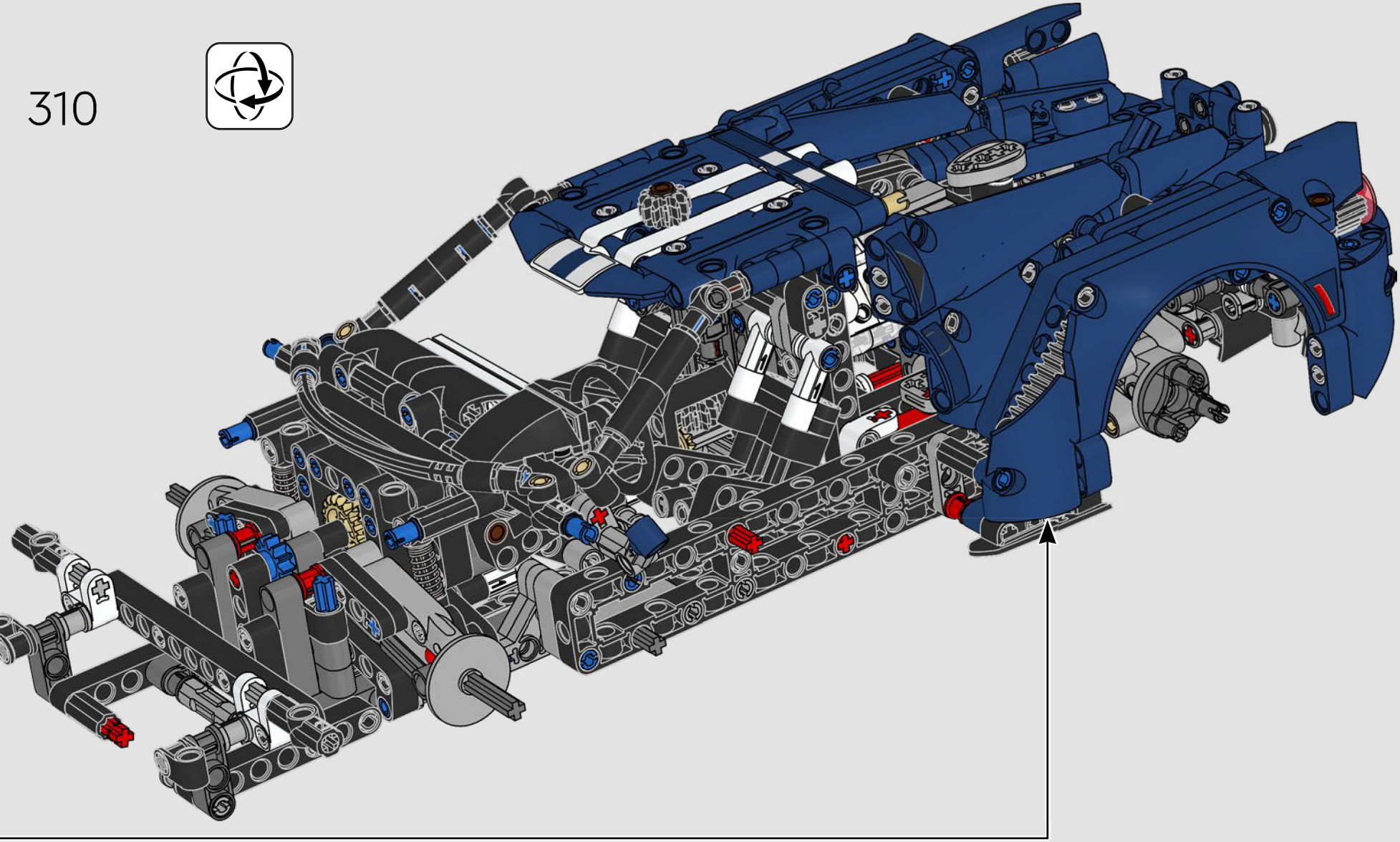

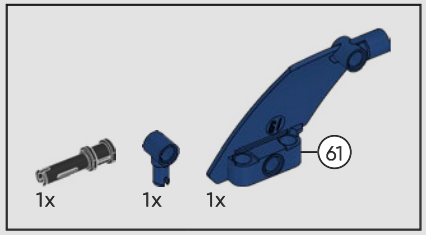

311

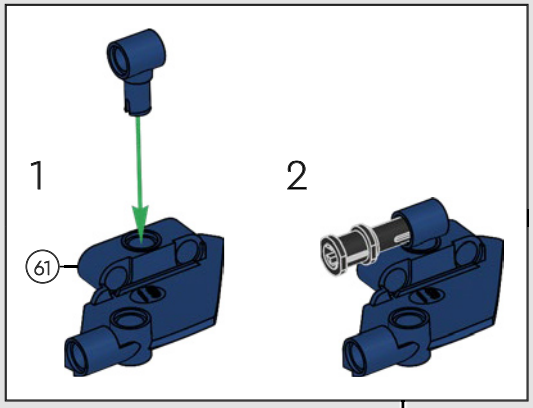

312

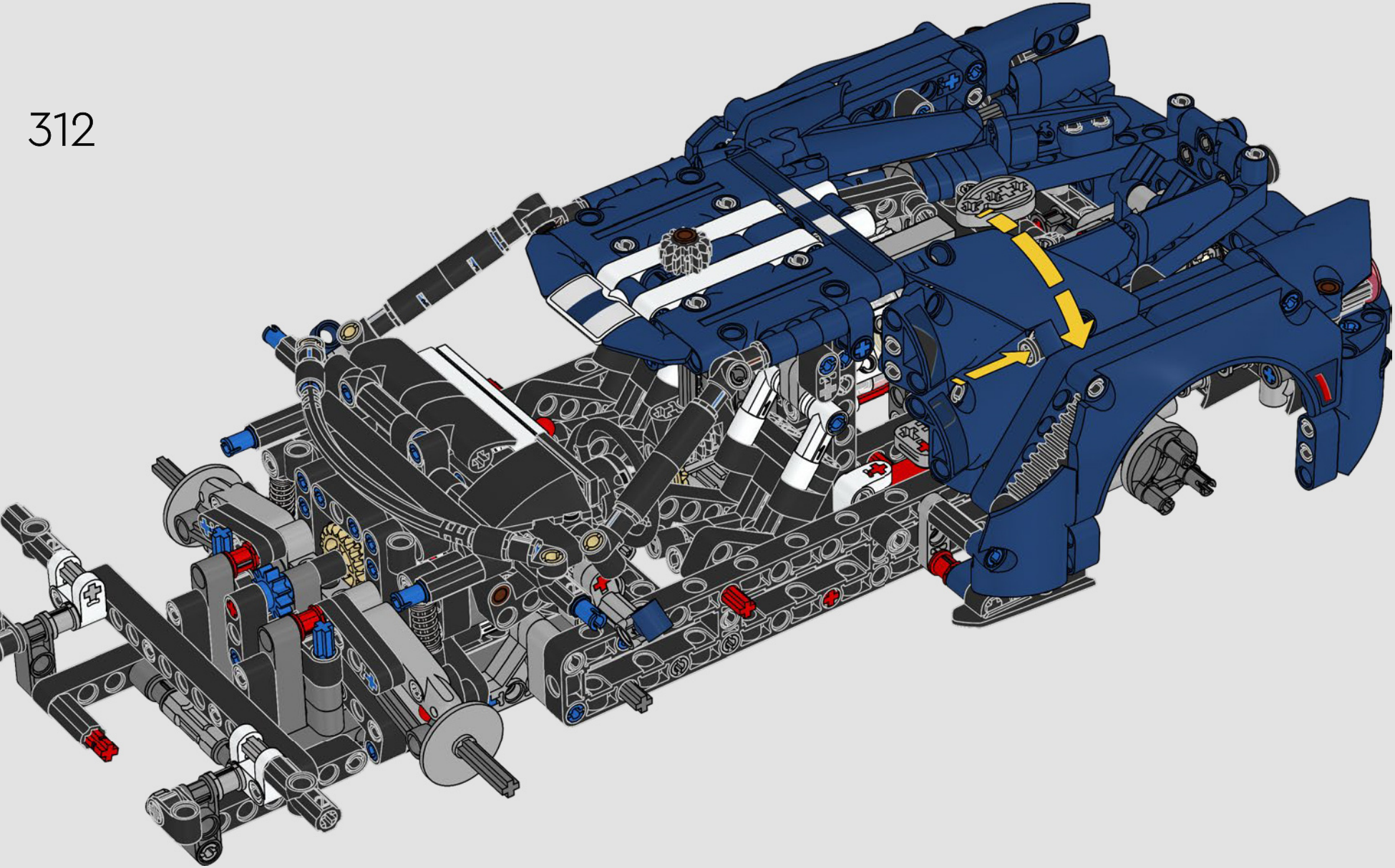

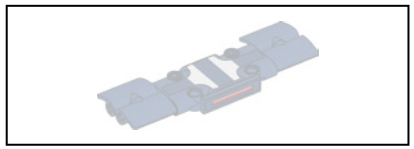

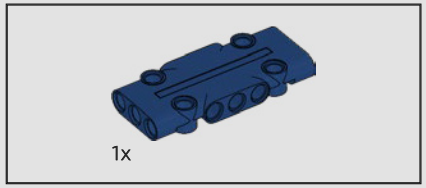

313

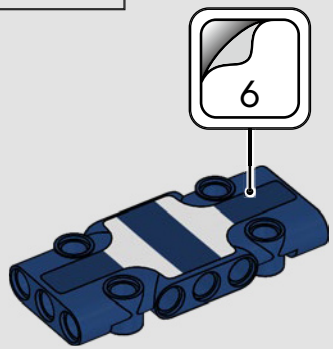

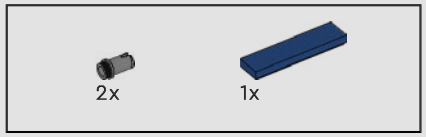

314

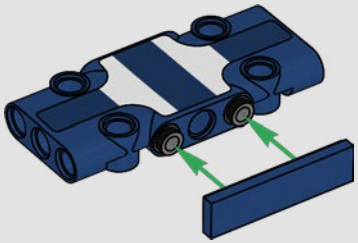

315

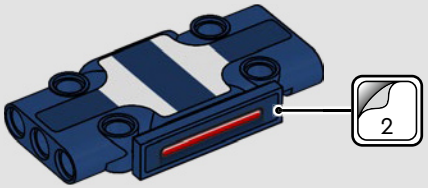

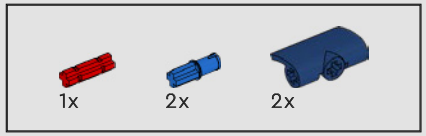

316

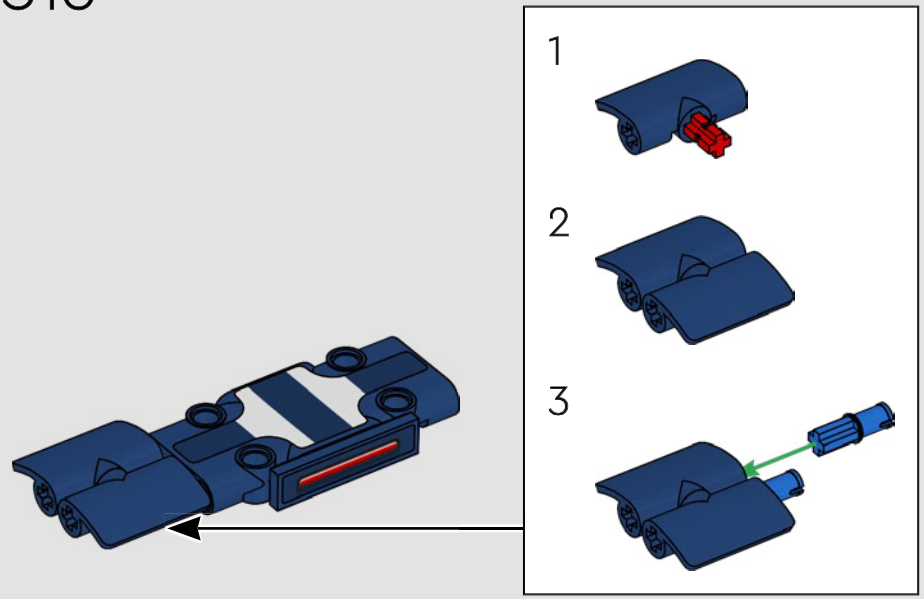

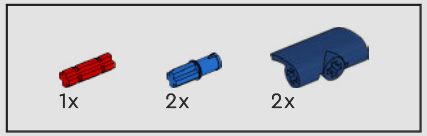

317

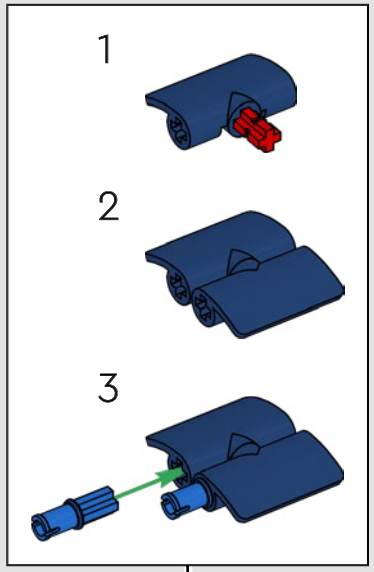

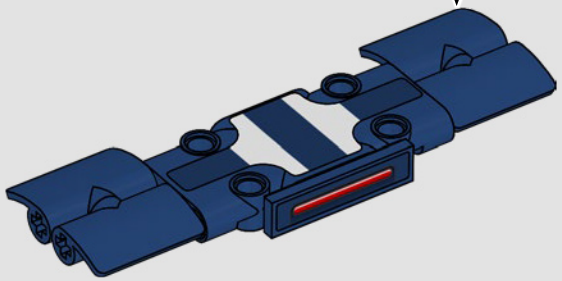

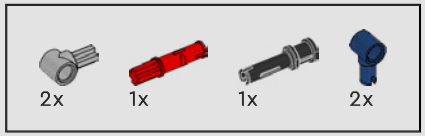

318

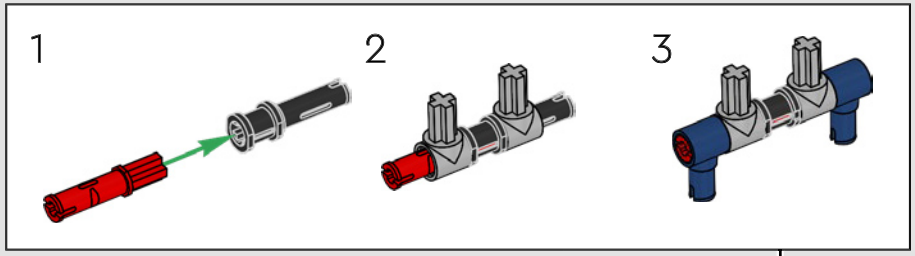

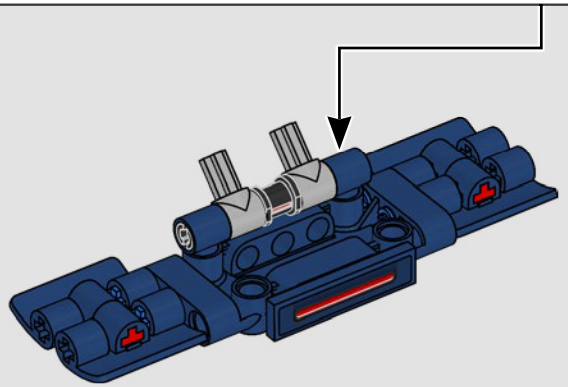

319

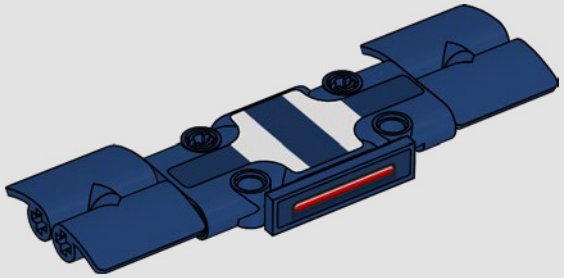

320

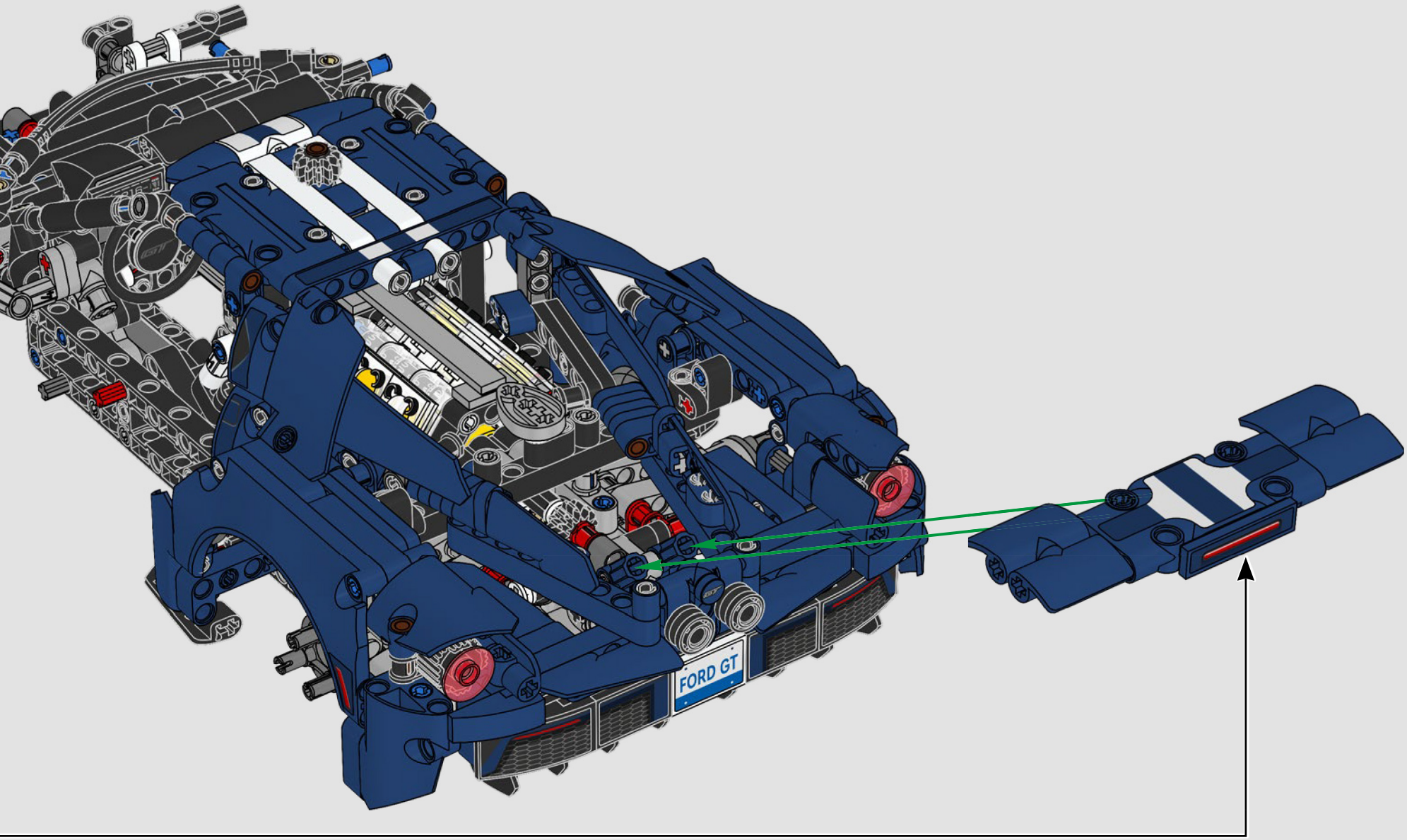

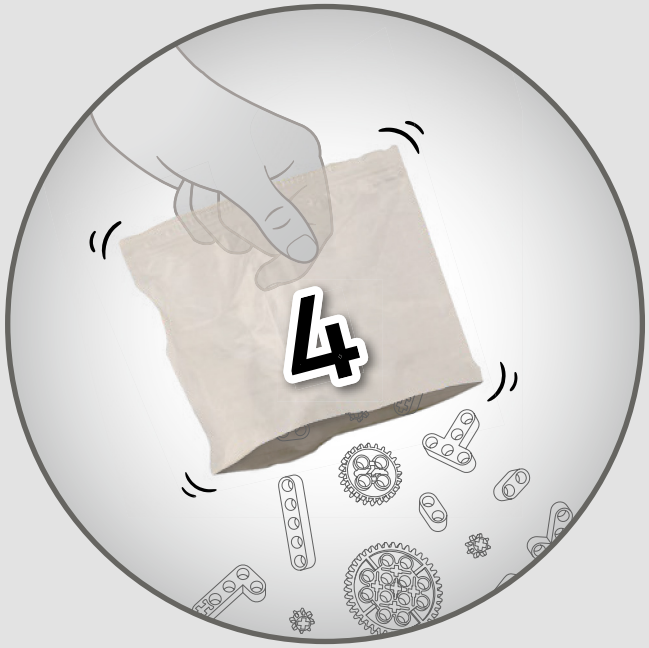
4

321

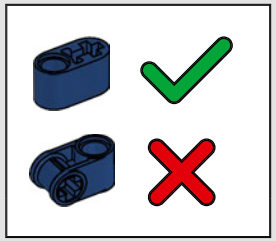

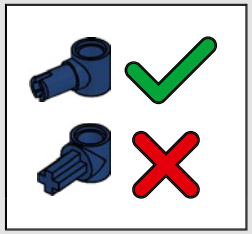

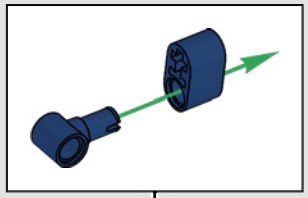

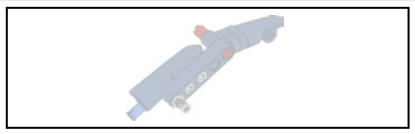

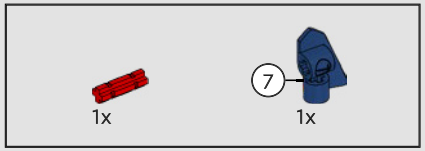

322

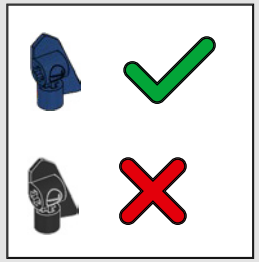

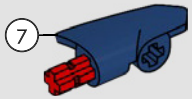

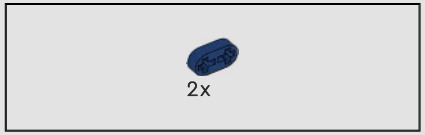

323

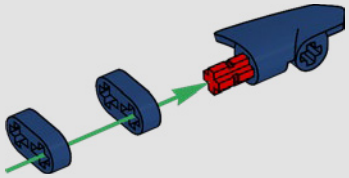

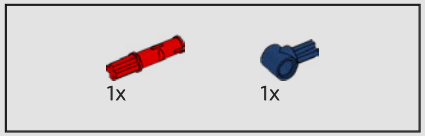

324

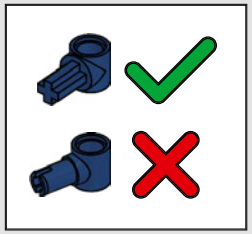

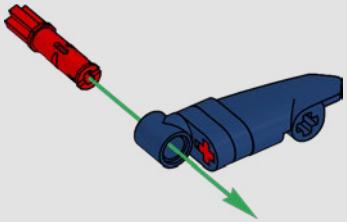

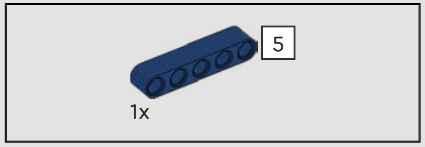

325

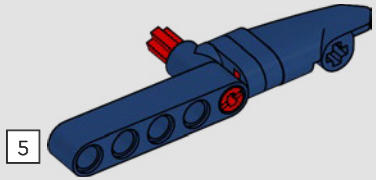

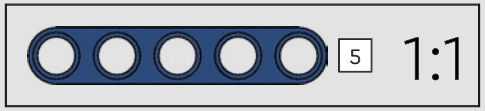

326

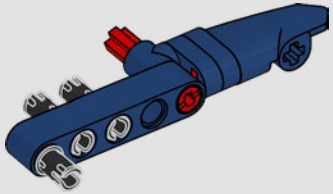

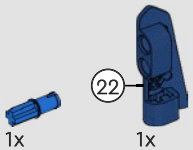

327

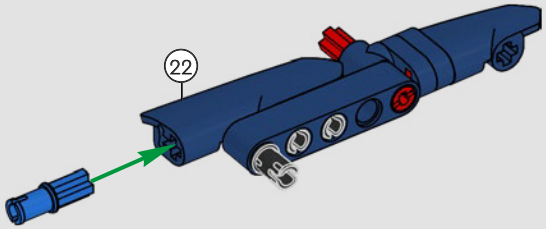

328

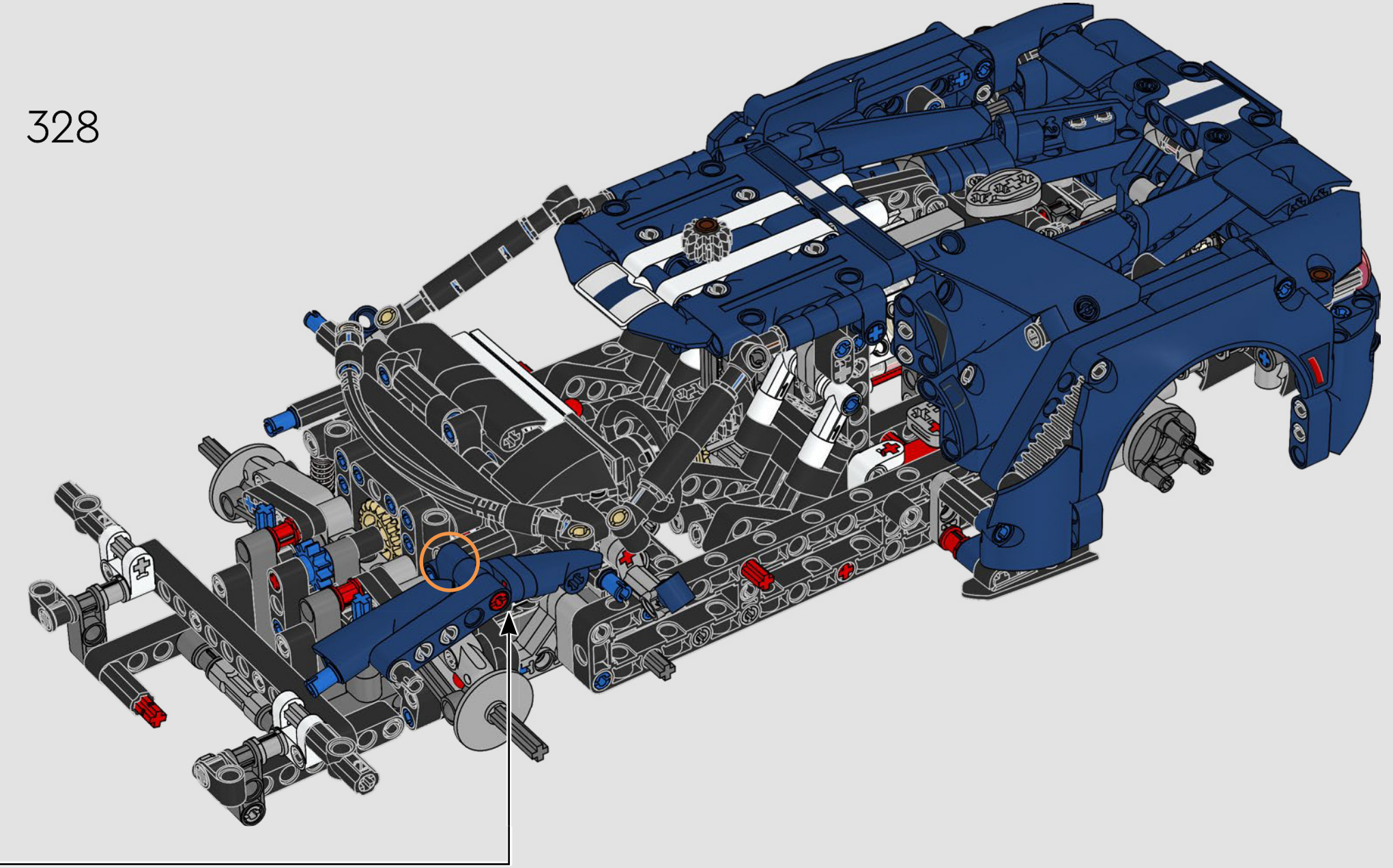

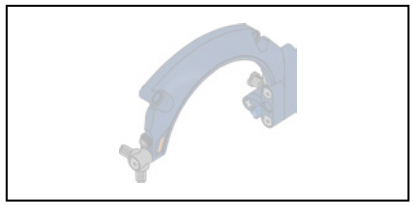

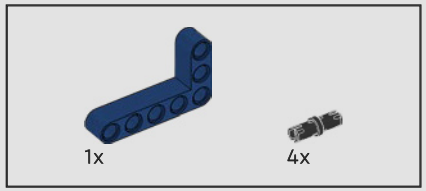

329

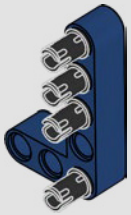

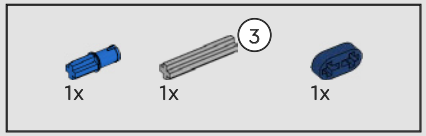

330

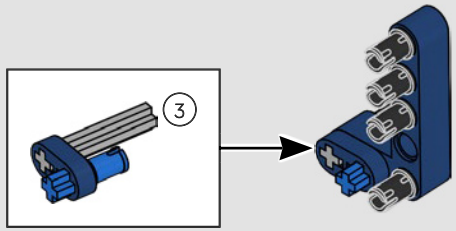

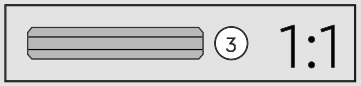

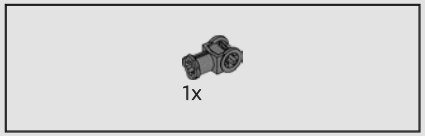

331

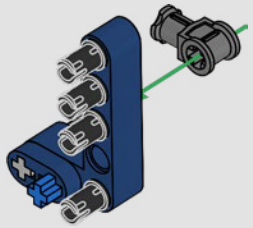

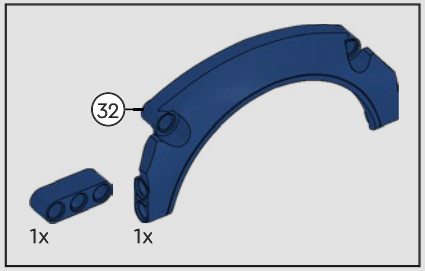

332

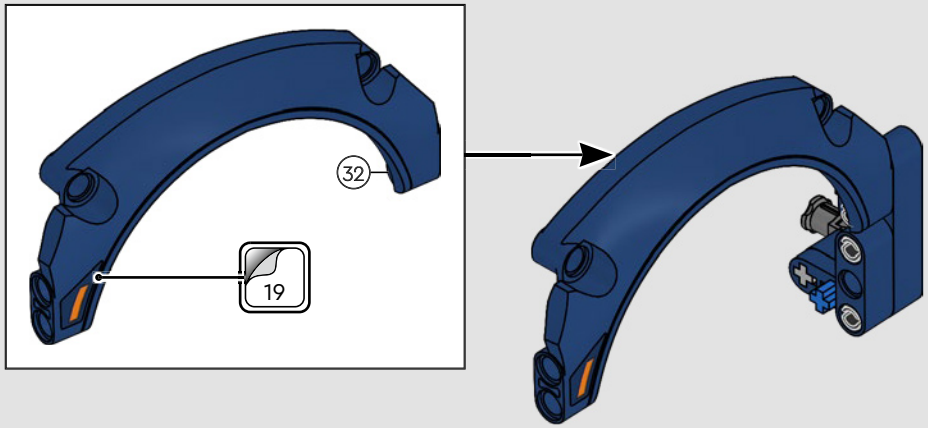

333

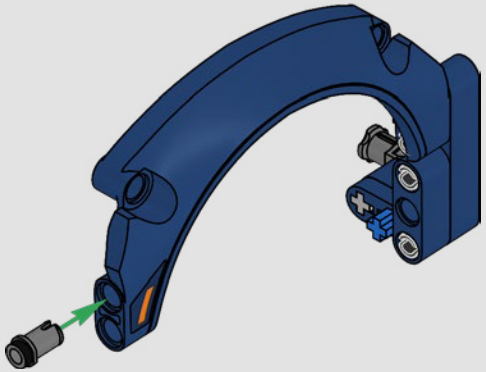

334

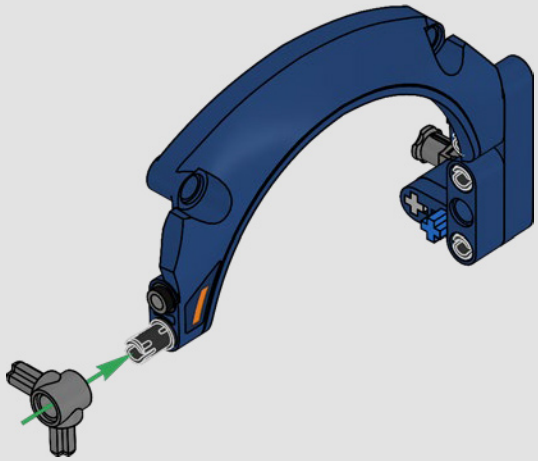

335

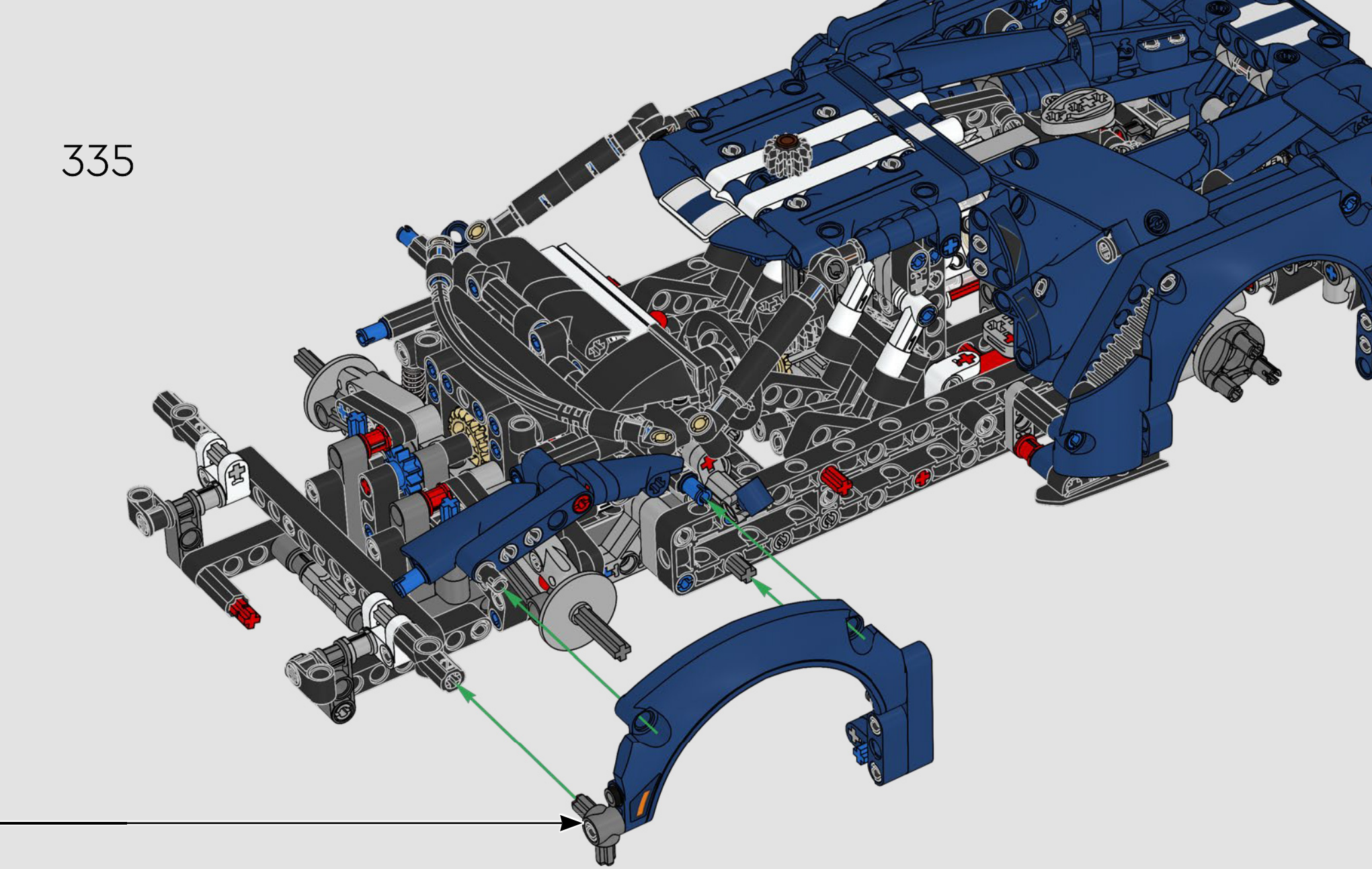

336

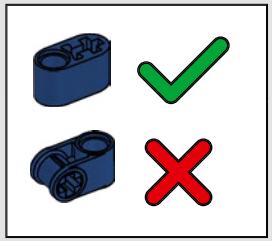

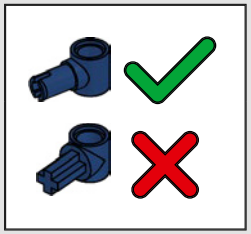

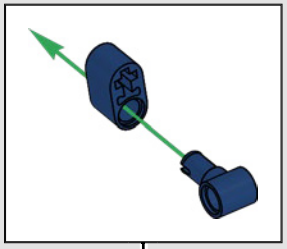

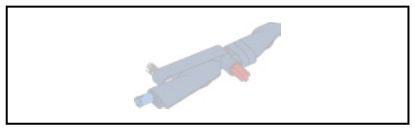

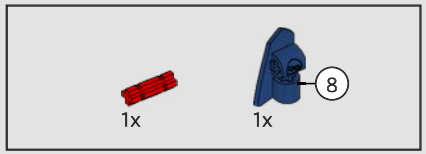

337

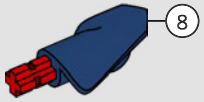

338

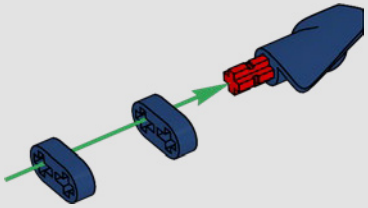

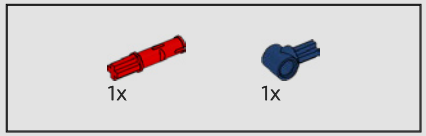

339

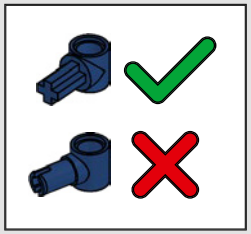

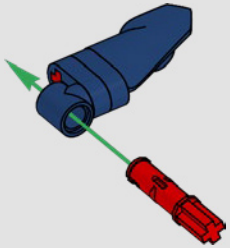

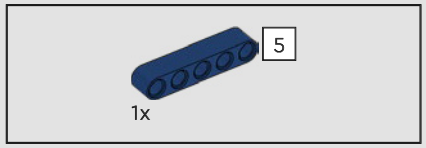

340

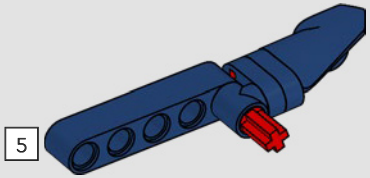

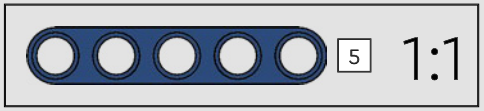

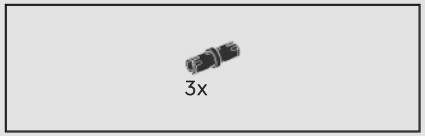

341

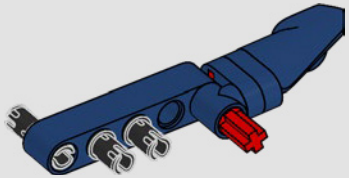

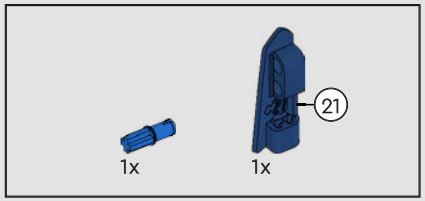

342

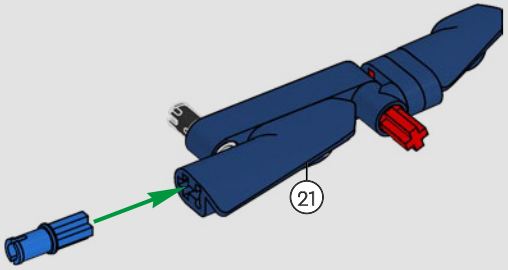

343

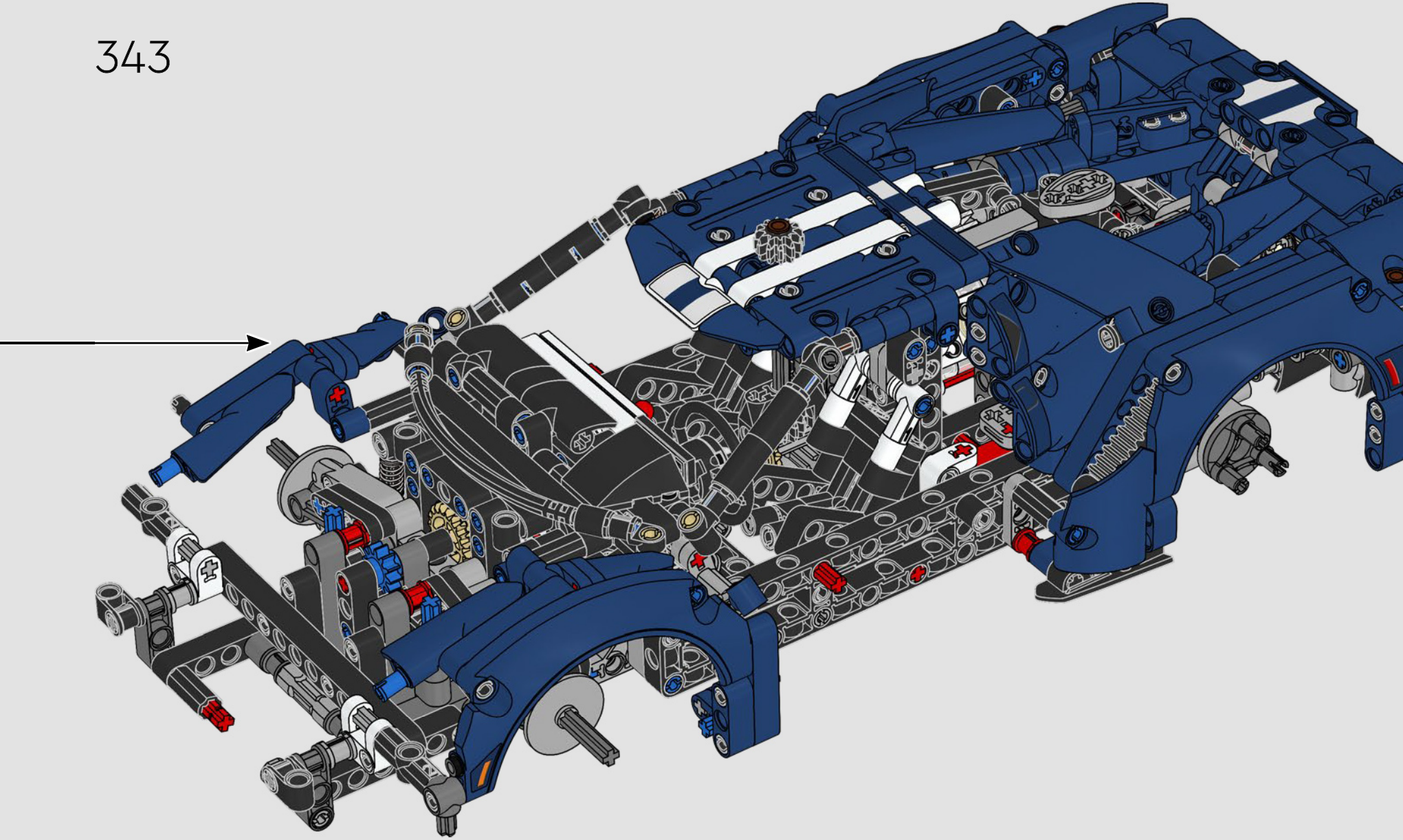

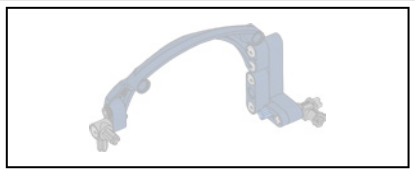

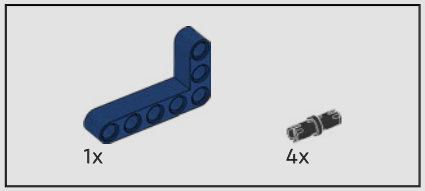

344

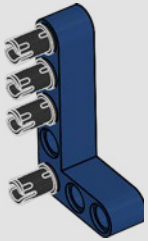

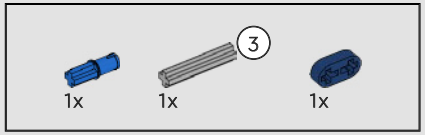

345

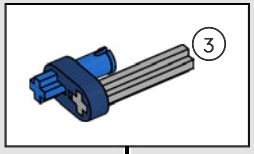

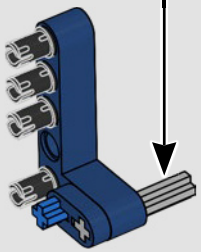

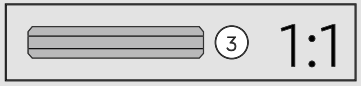

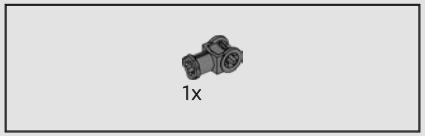

346

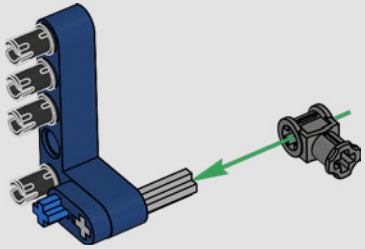

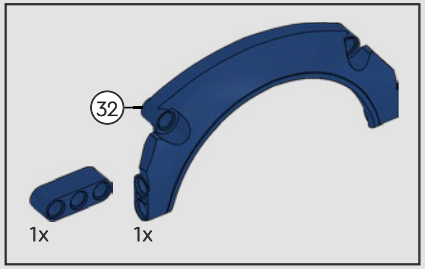

347

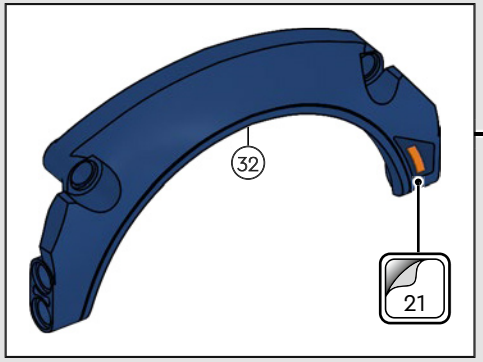

348

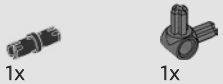

349

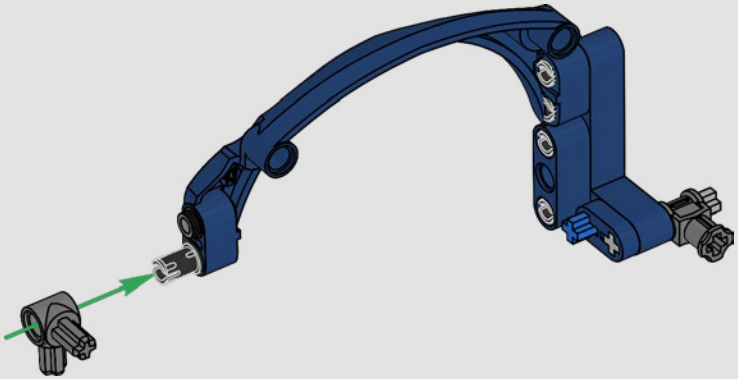

350

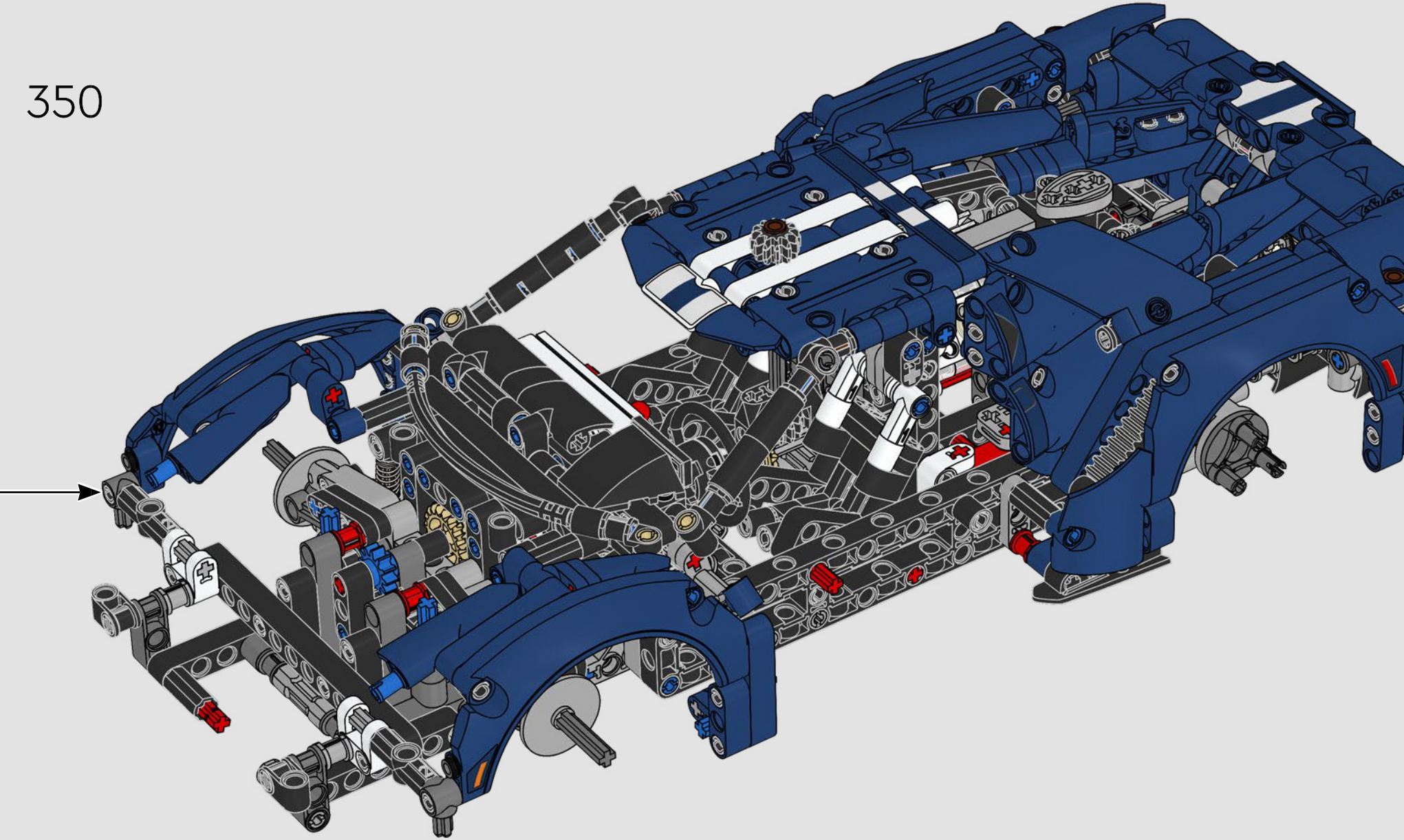

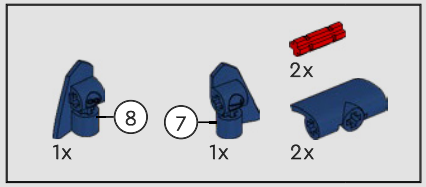

351

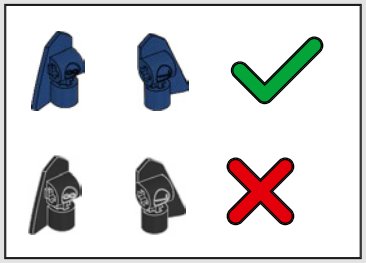

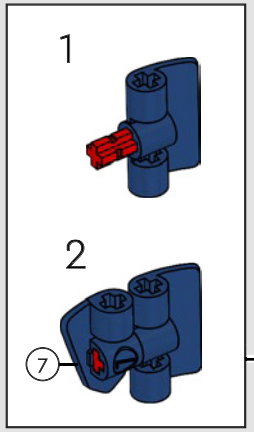

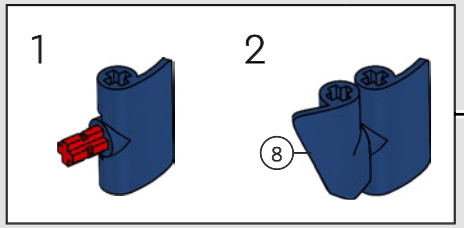

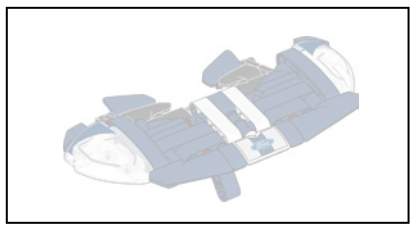

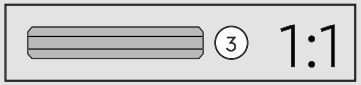

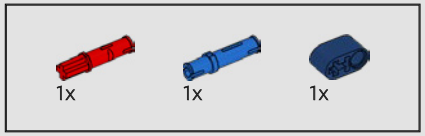

352

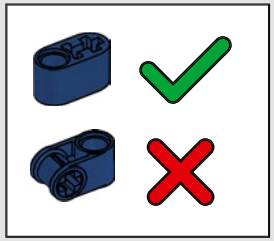

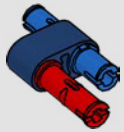

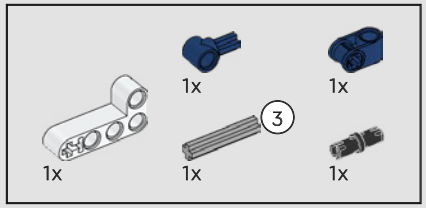

353

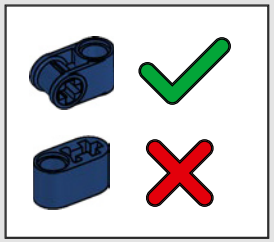

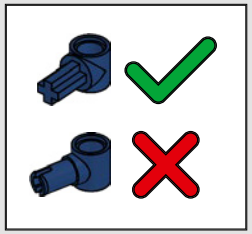

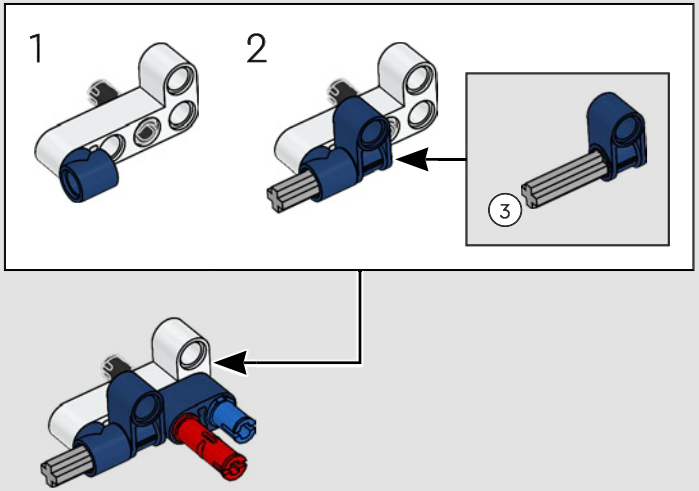

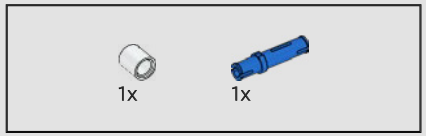

354

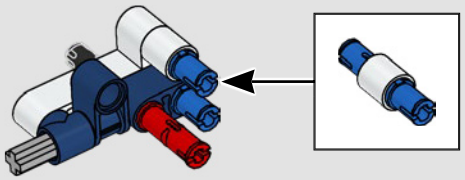

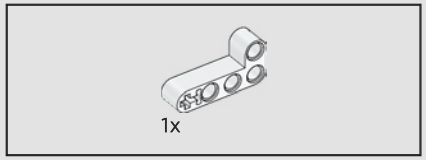

355

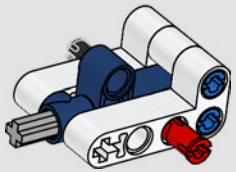

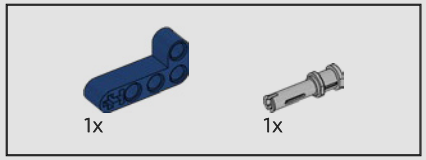

356

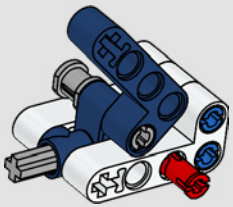

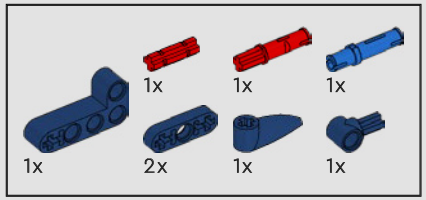

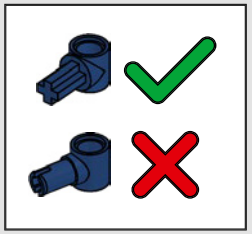

357

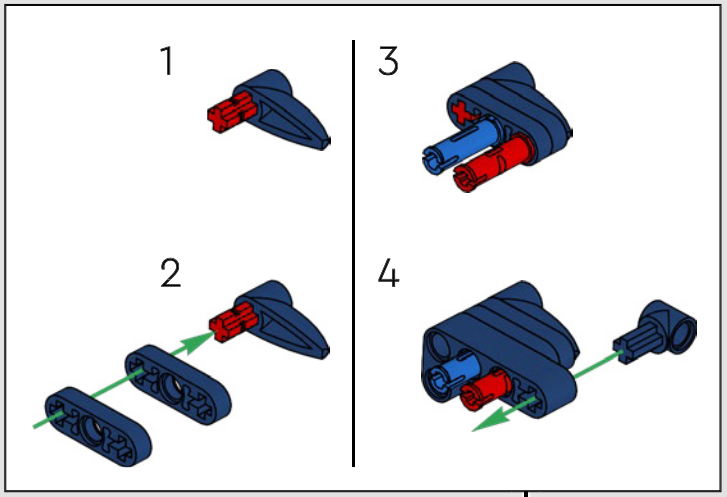

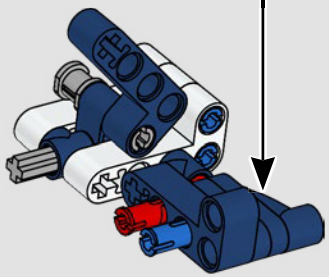

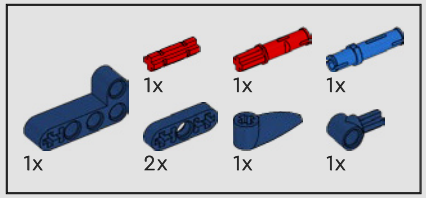

358

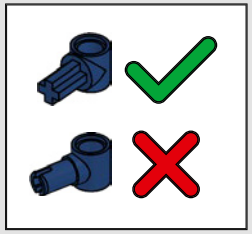

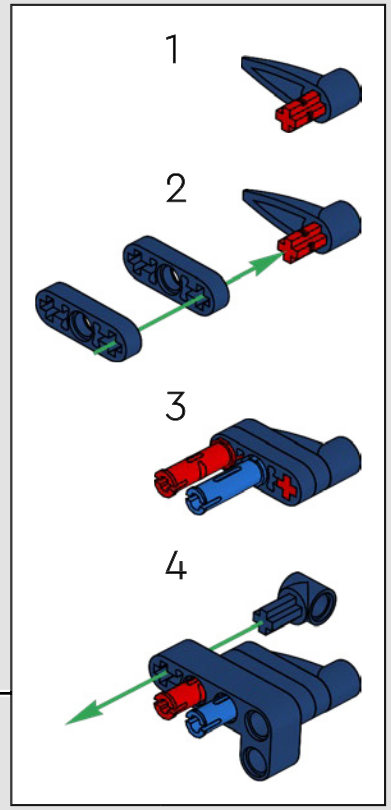

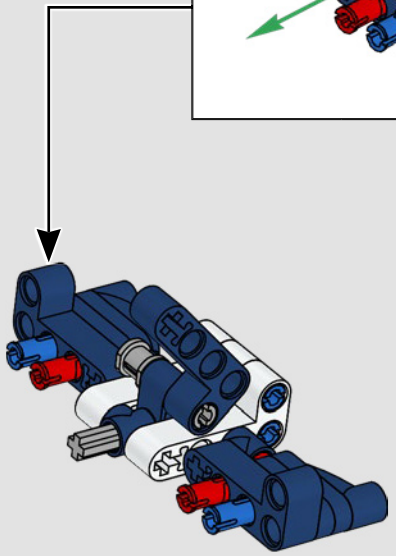

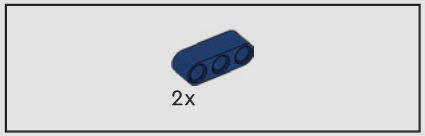

359

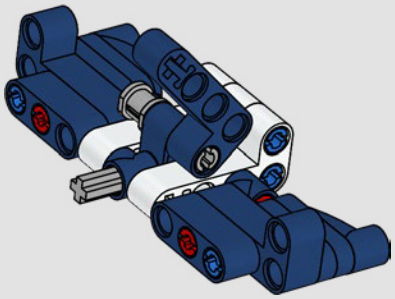

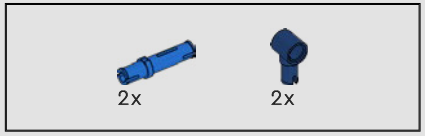

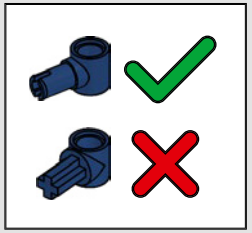

360

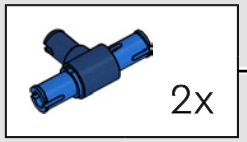

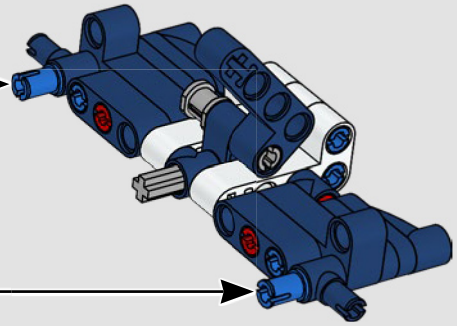

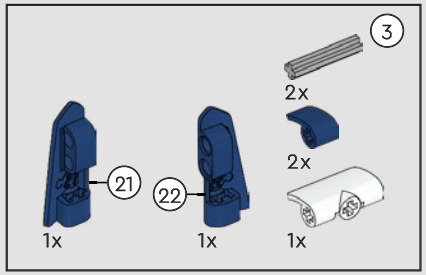

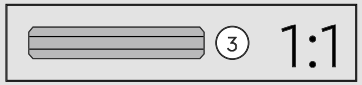

361

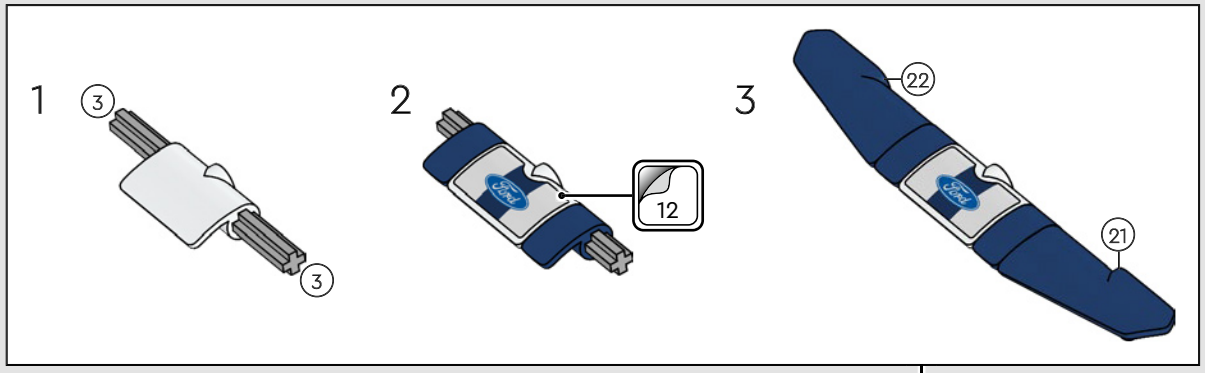

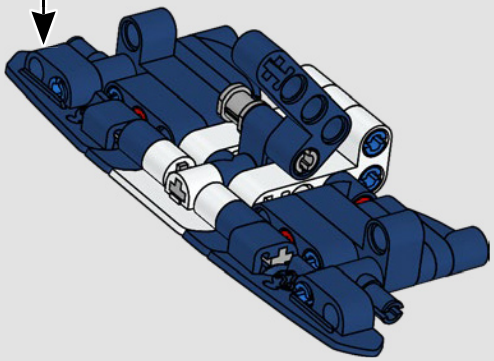

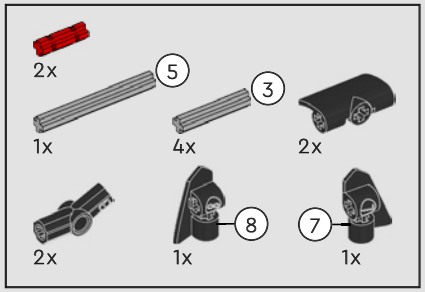

362

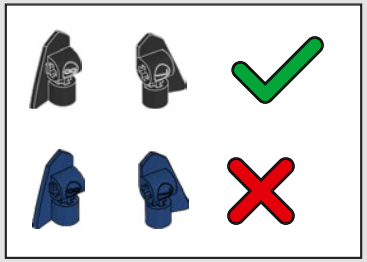

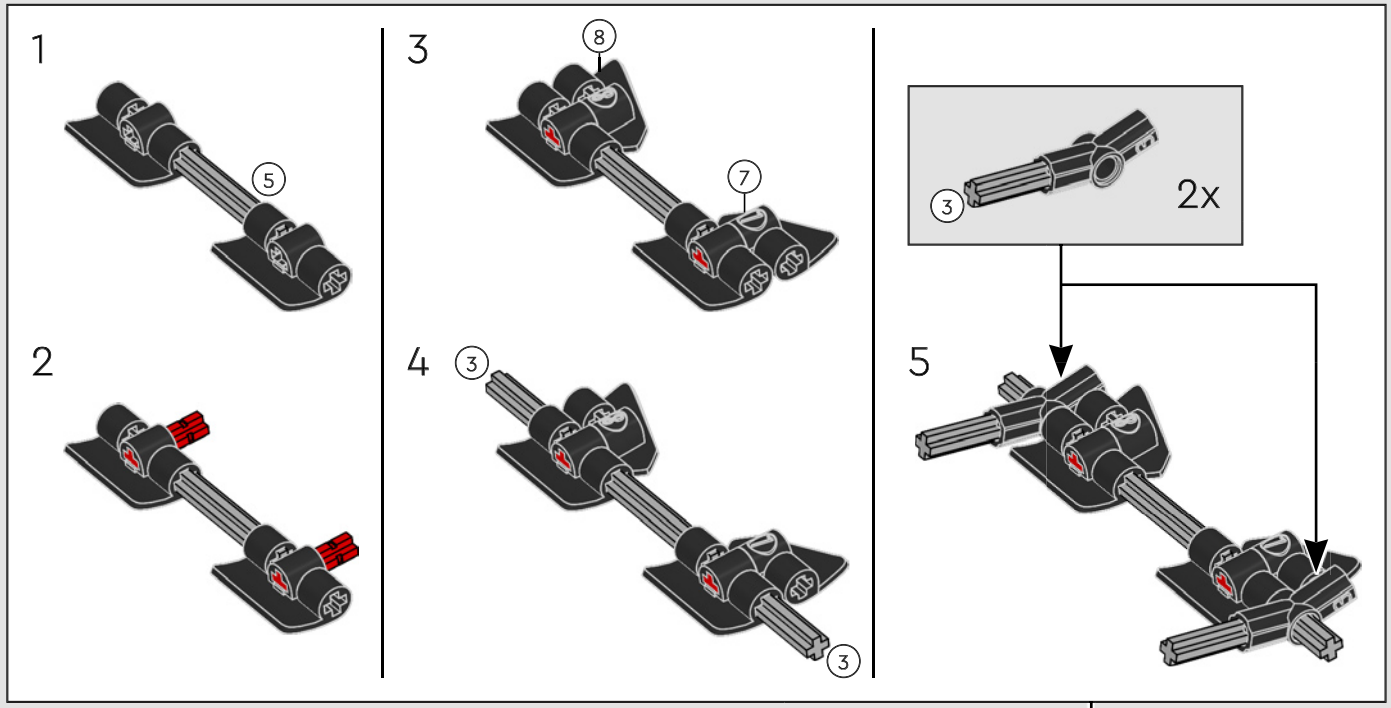

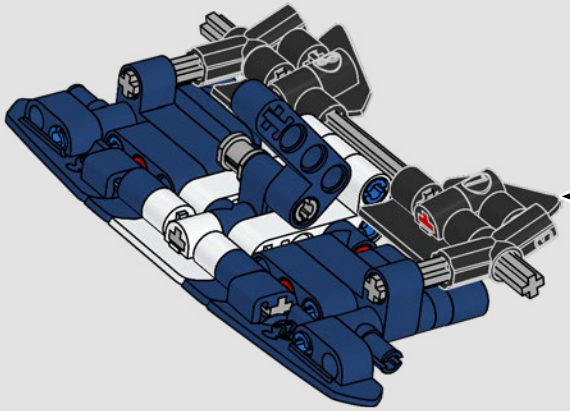

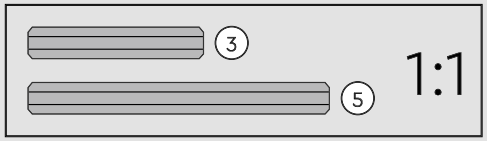

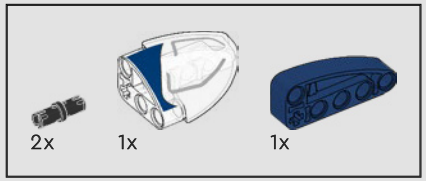

363

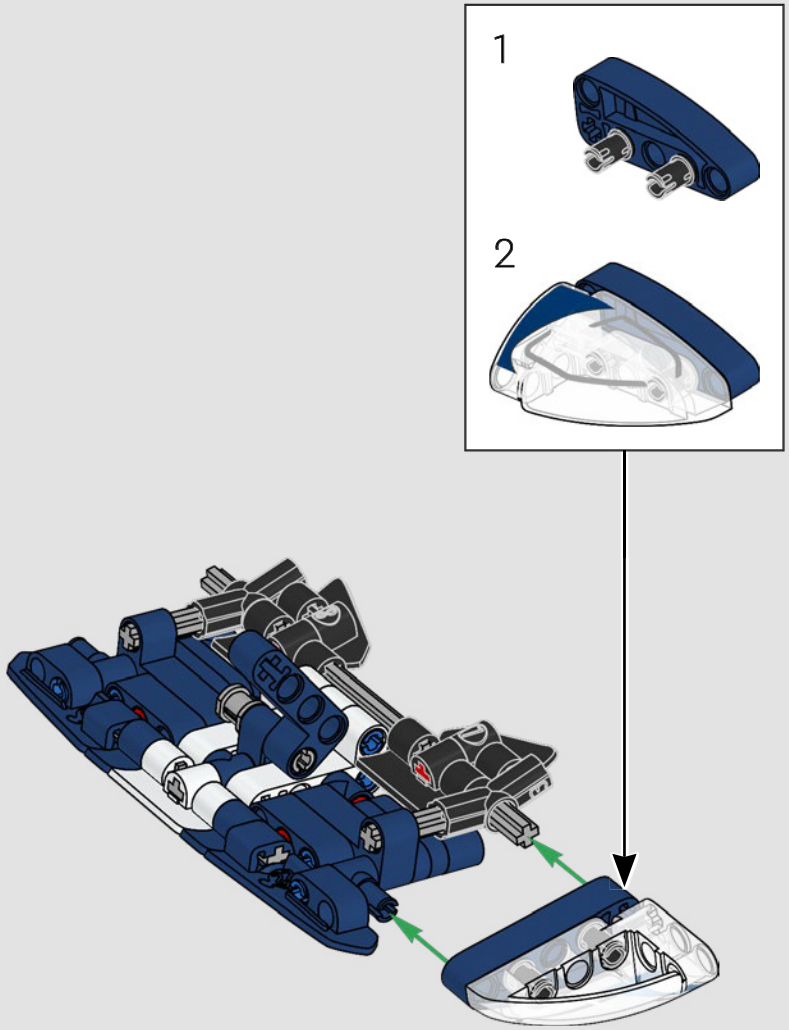

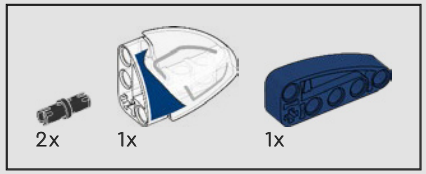

364

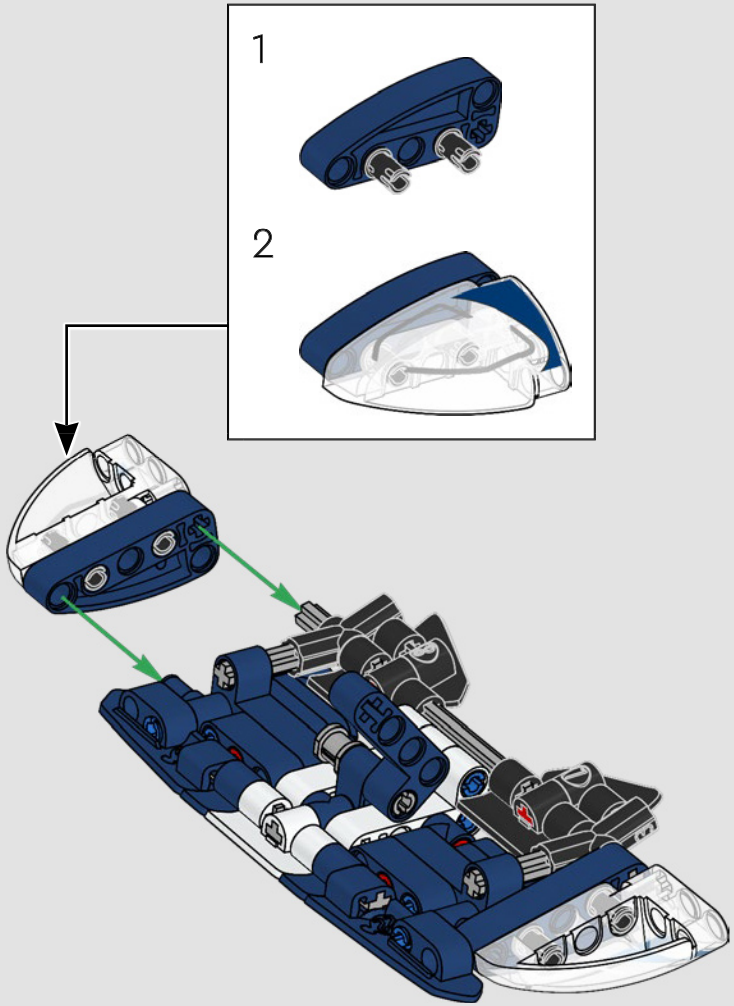

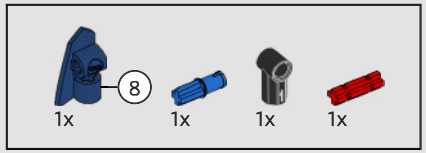

365

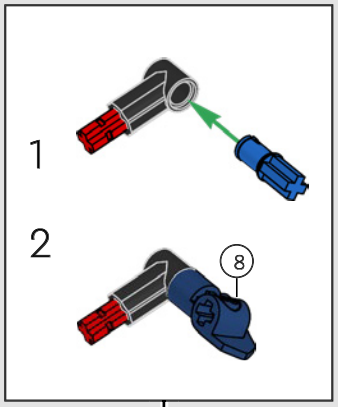

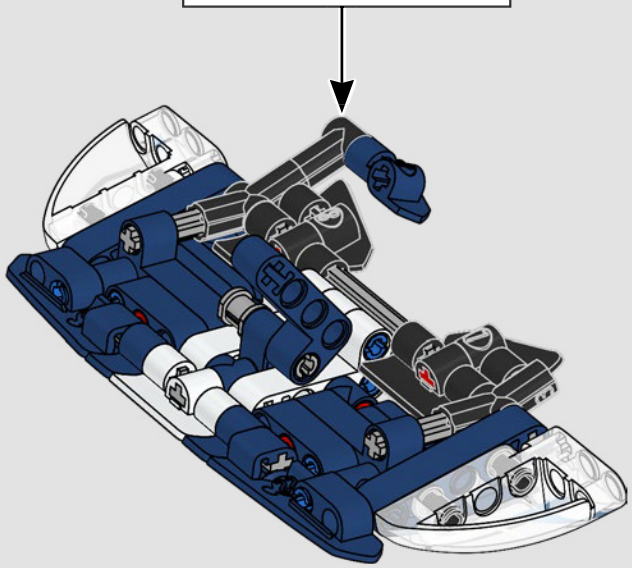

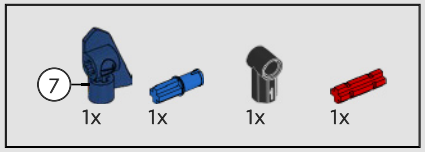

366

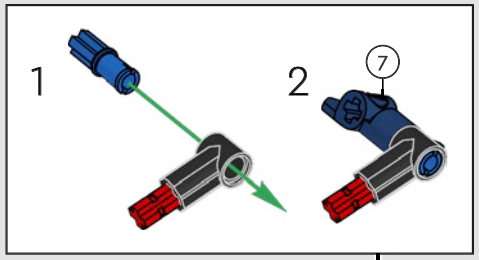

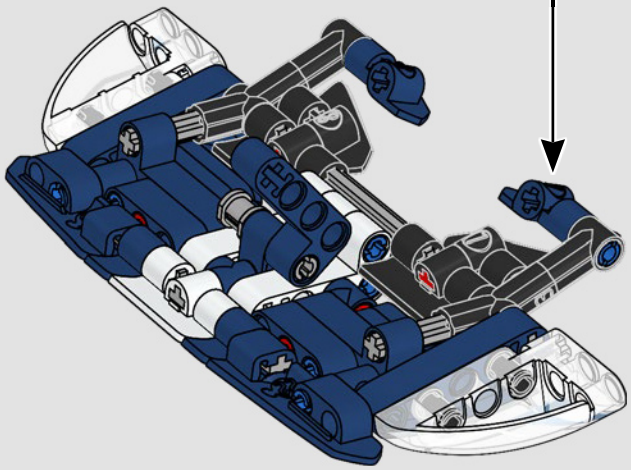

367

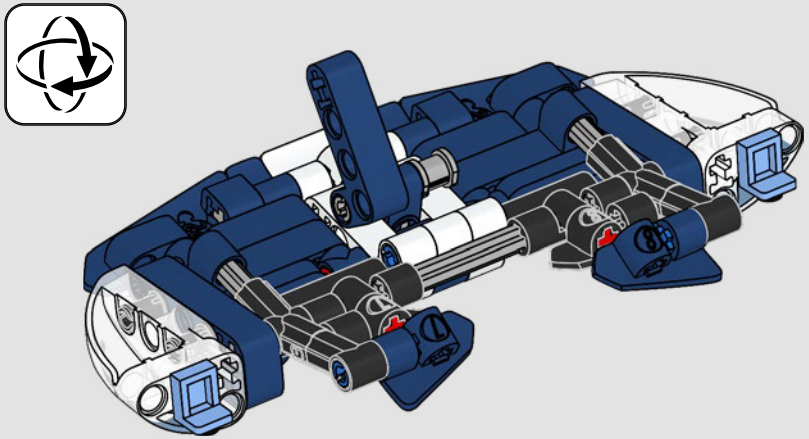

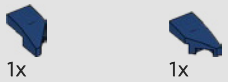

368

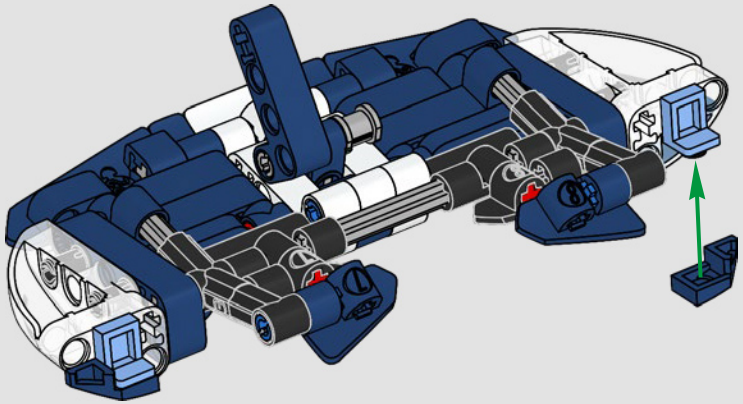

369

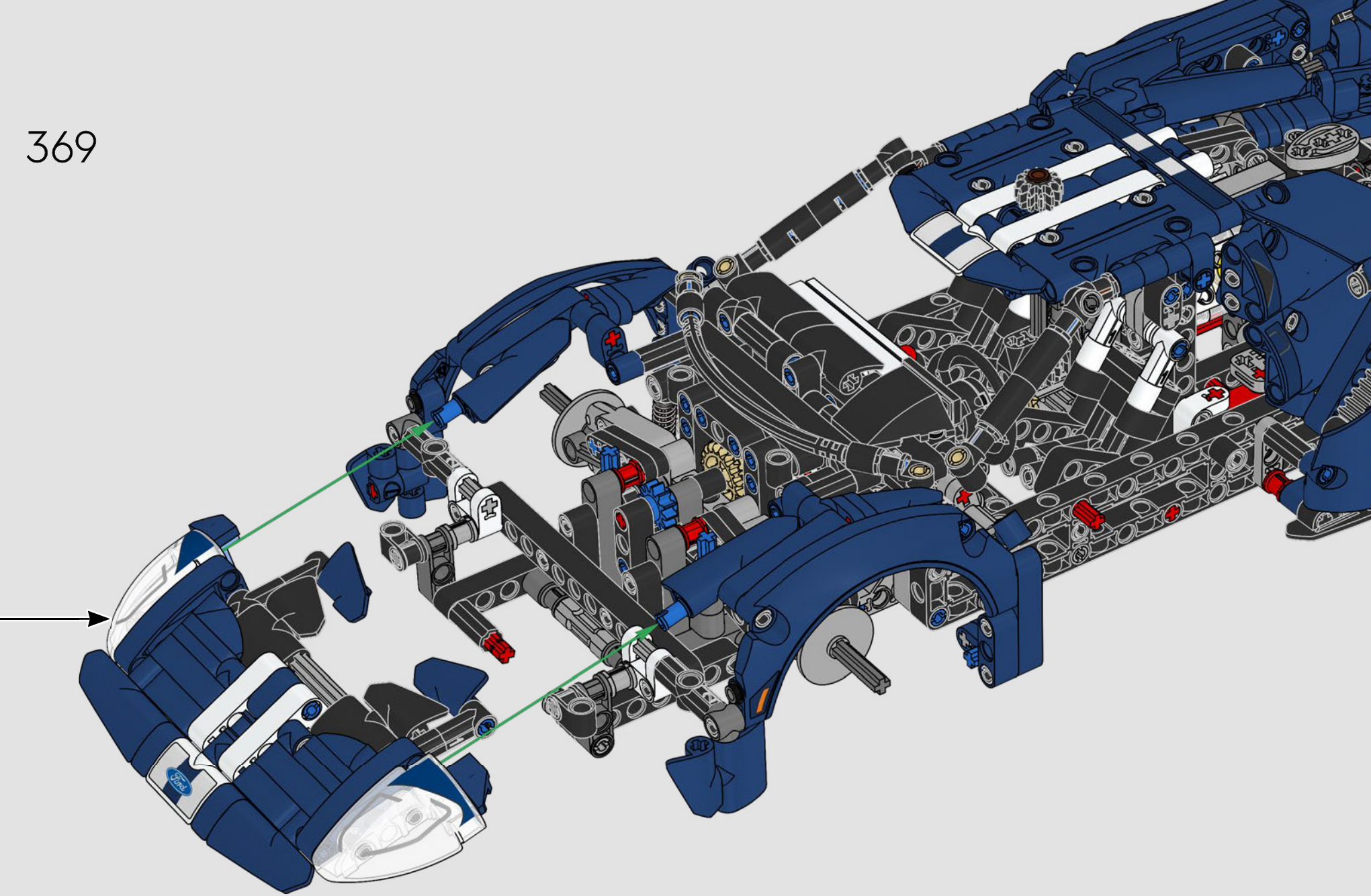

370

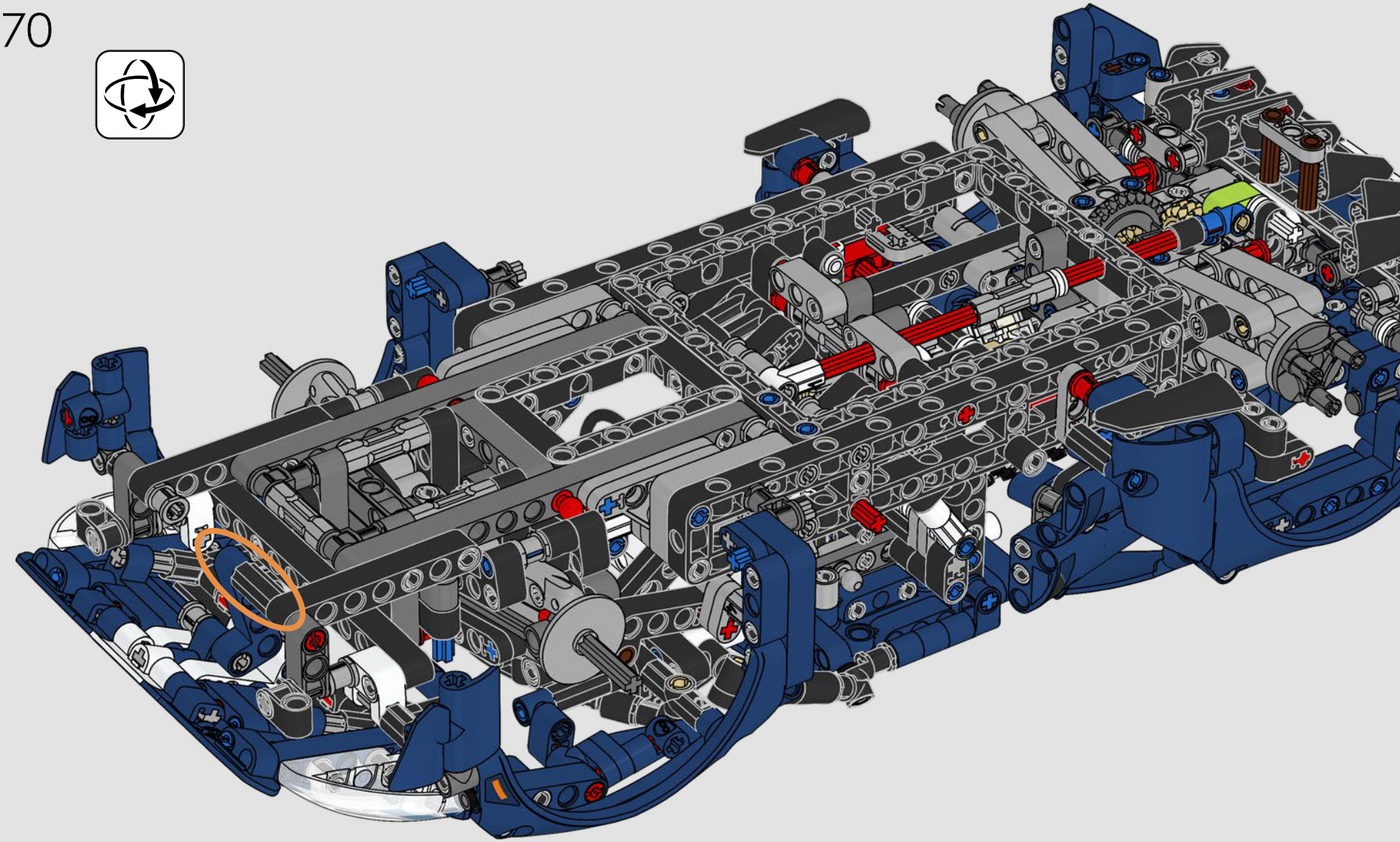

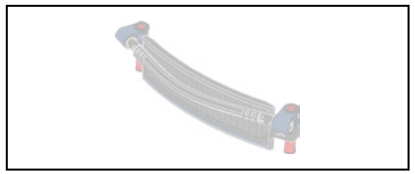

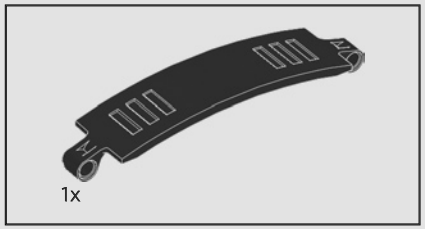

371

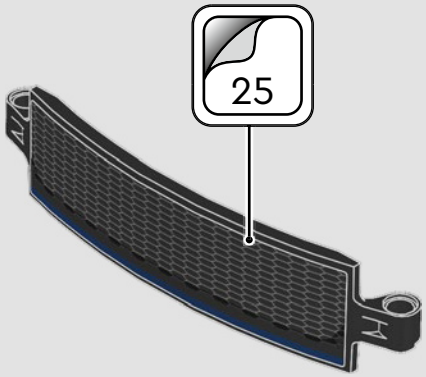

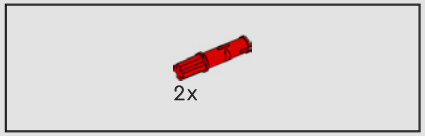

372

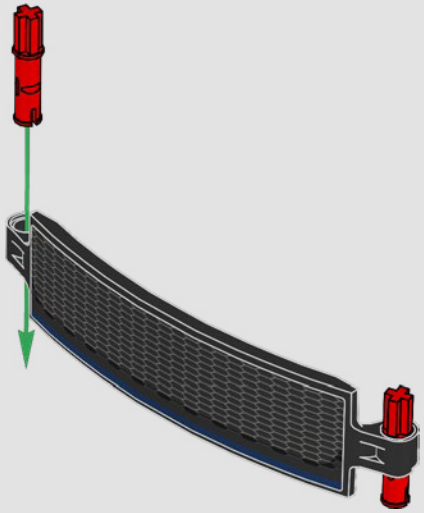

373

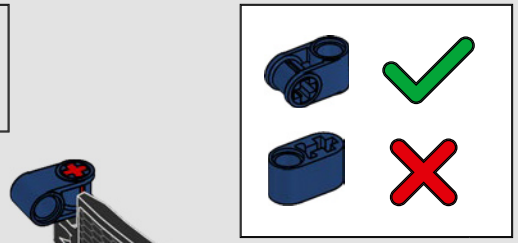

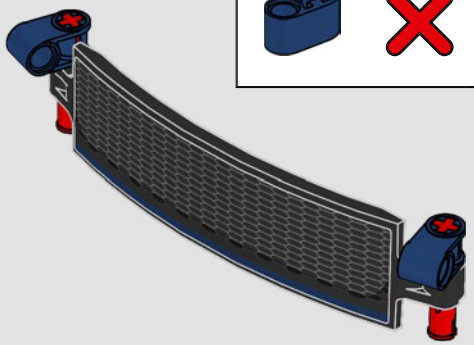

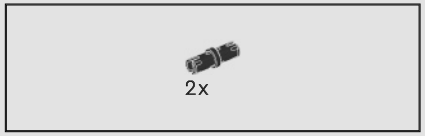

374

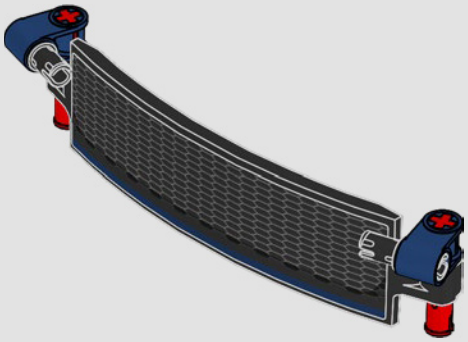

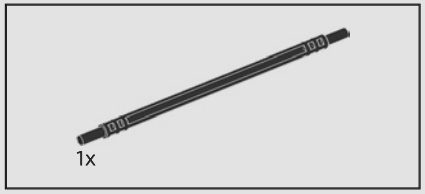

375

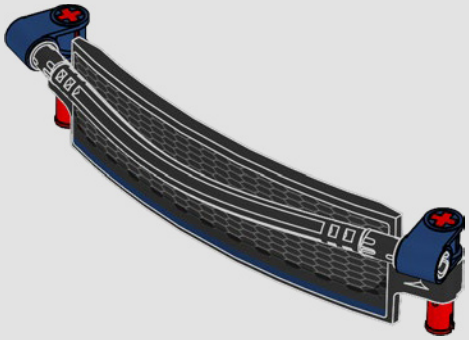

376

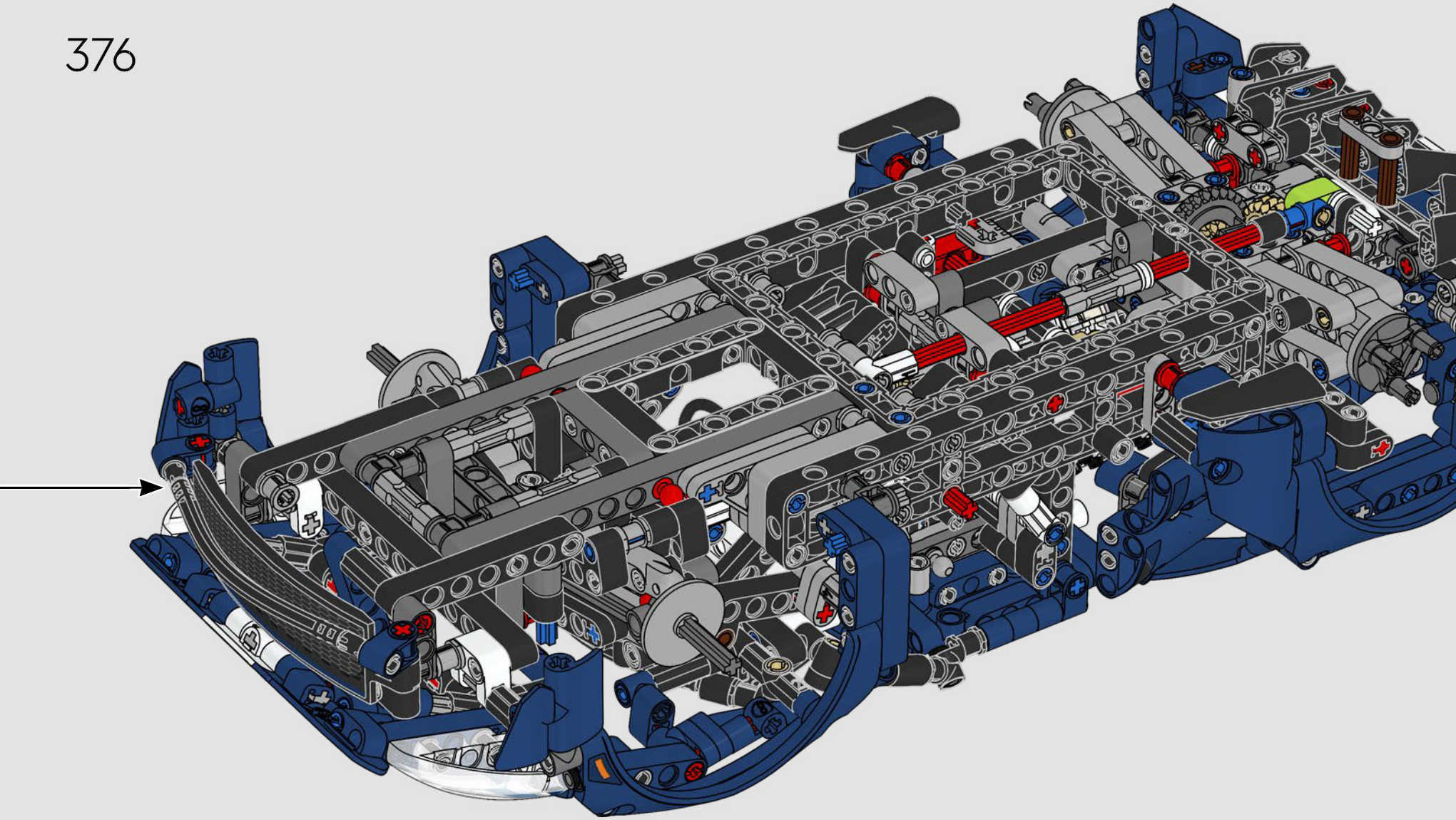

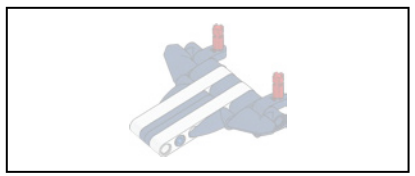

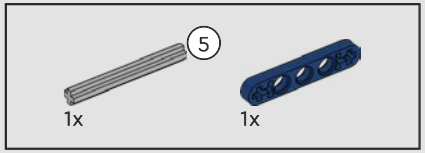

377

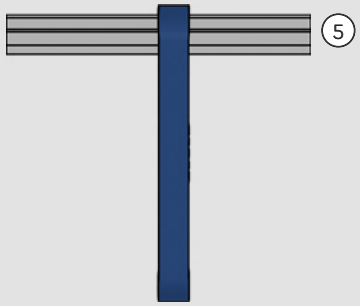

1:1

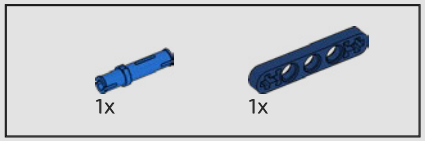

378

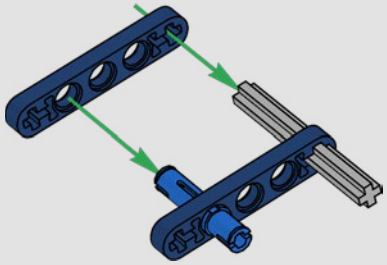

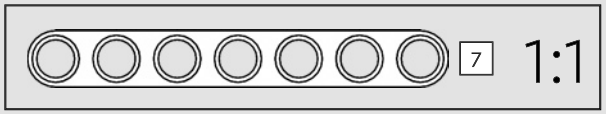

1:1

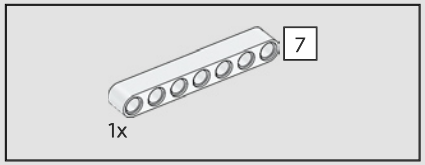

379

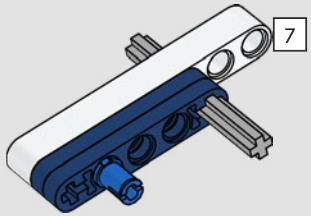

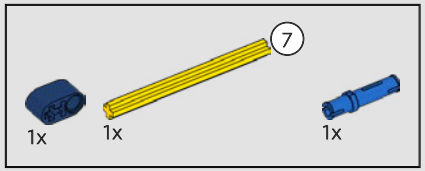

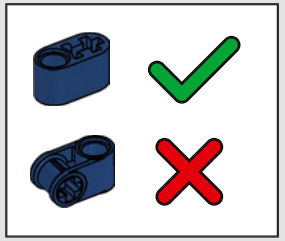

380

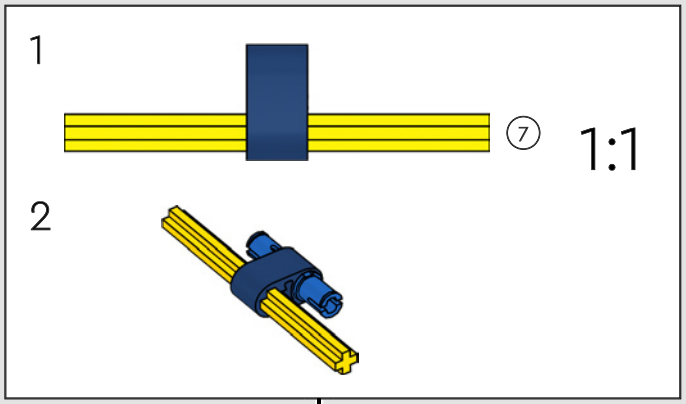

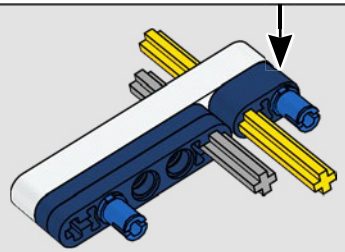

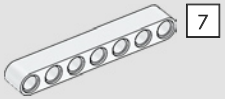

381

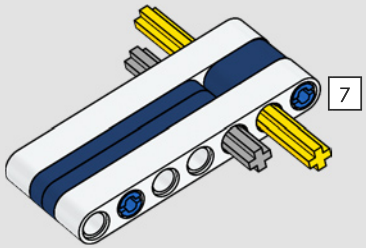

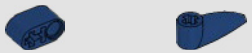

382

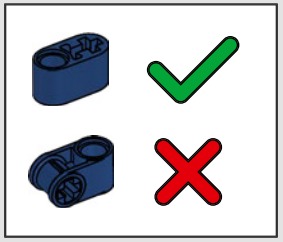

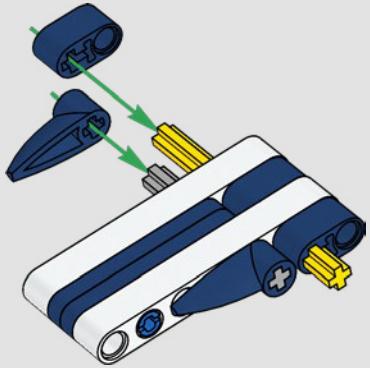

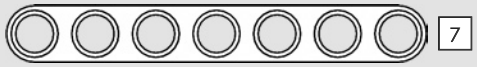

1:1

383

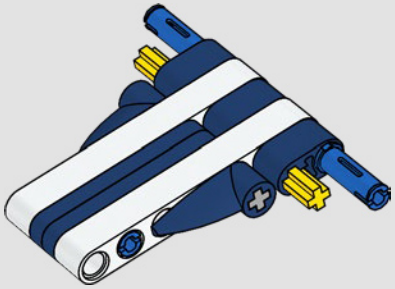

384

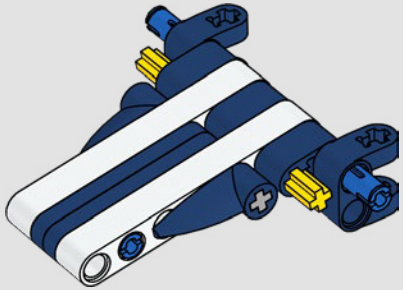

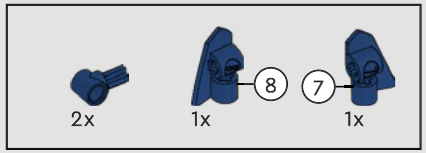

385

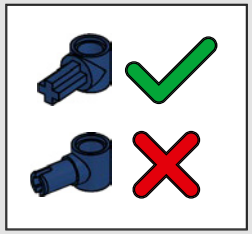

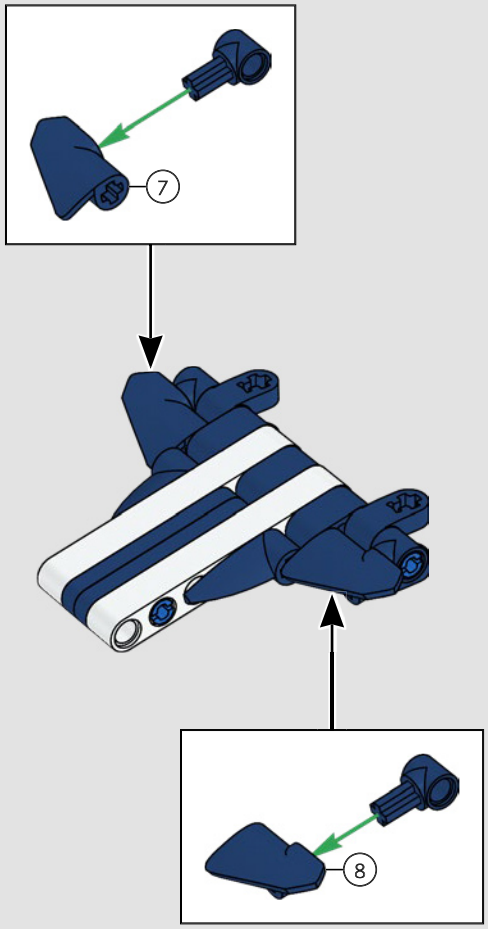

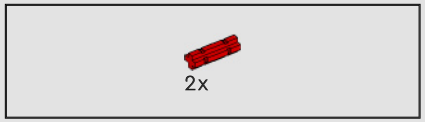

386

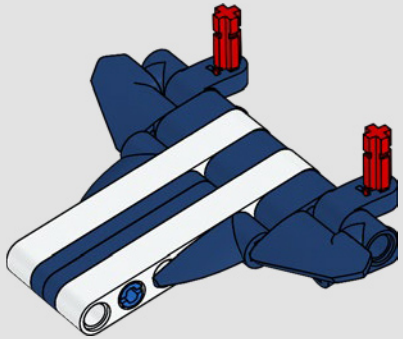

387

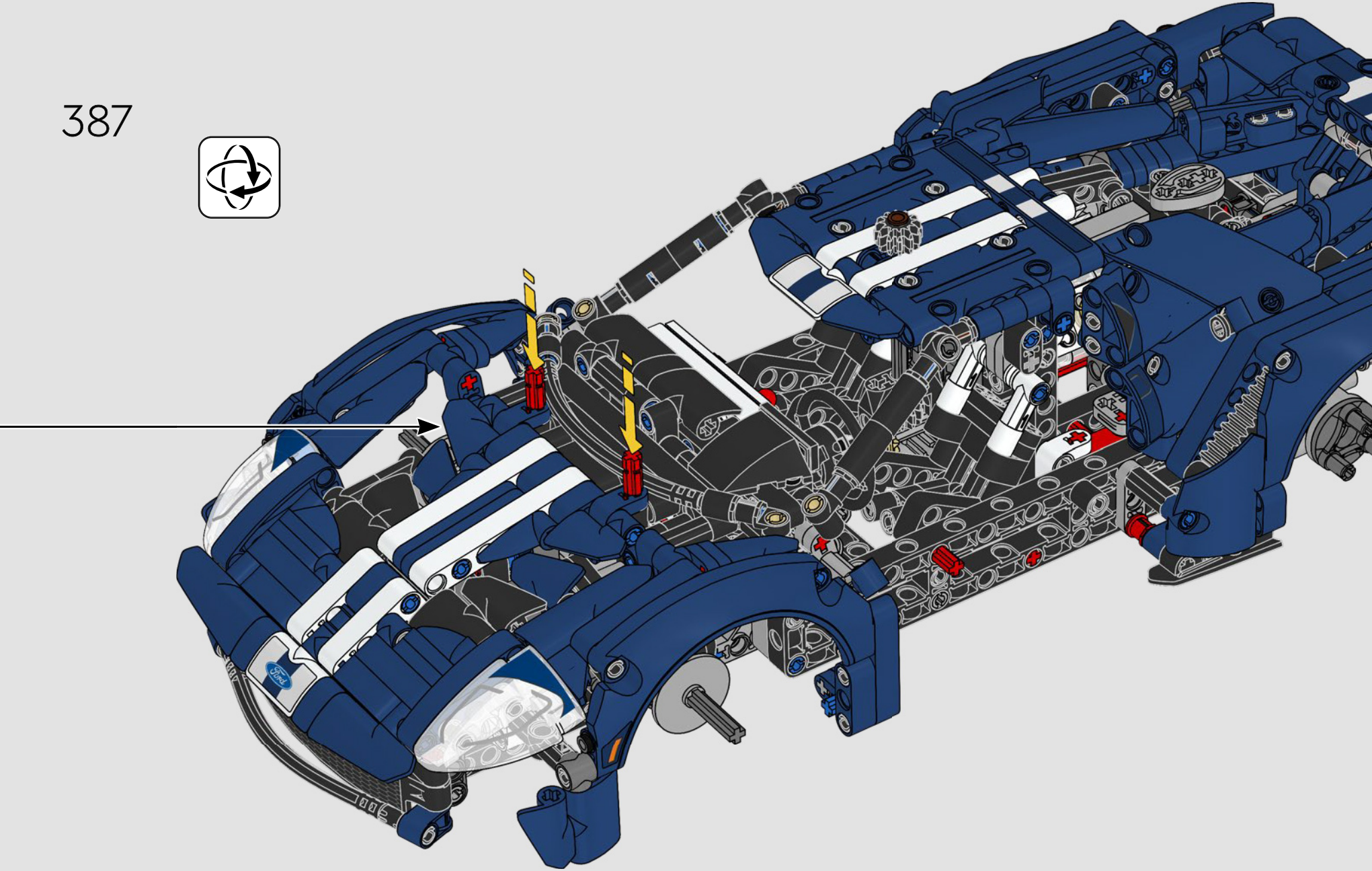

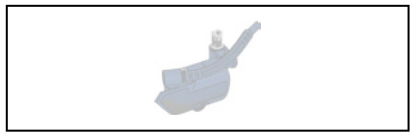

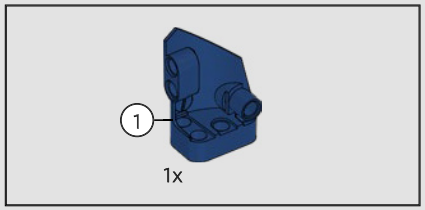

388

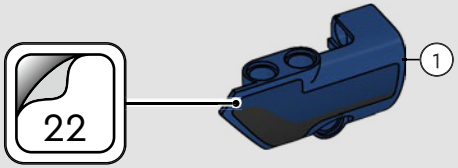

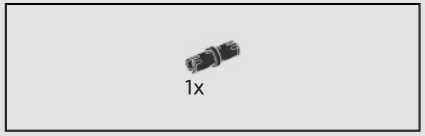

389

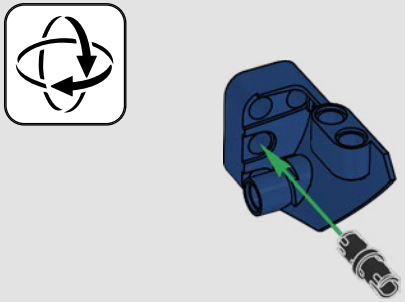

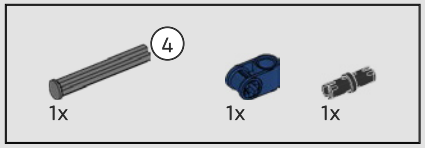

390

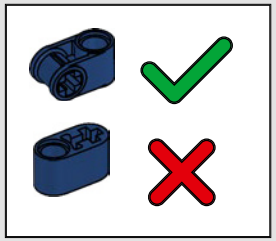

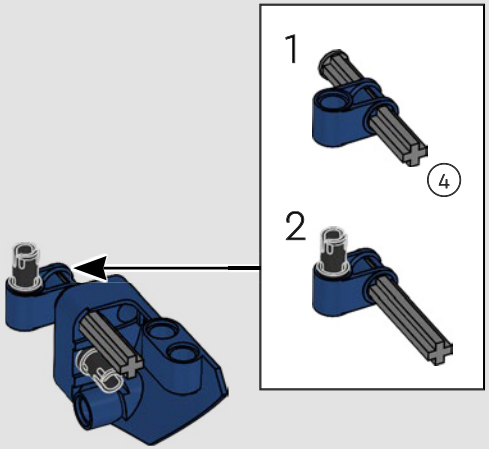

391

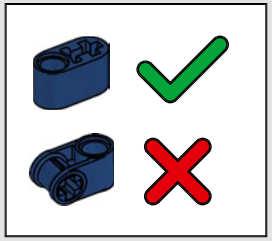

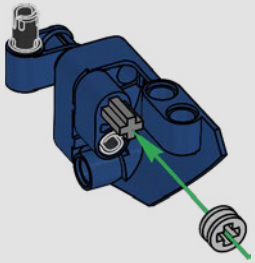

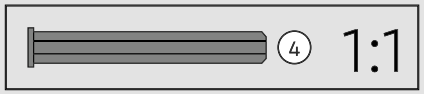

392

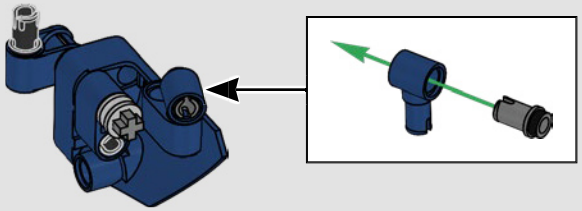

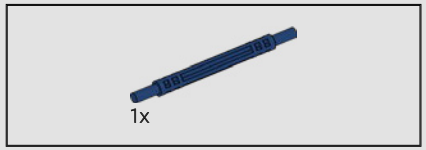

393

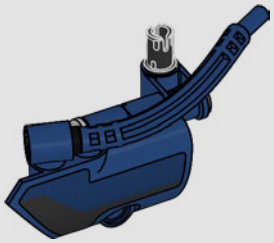

394

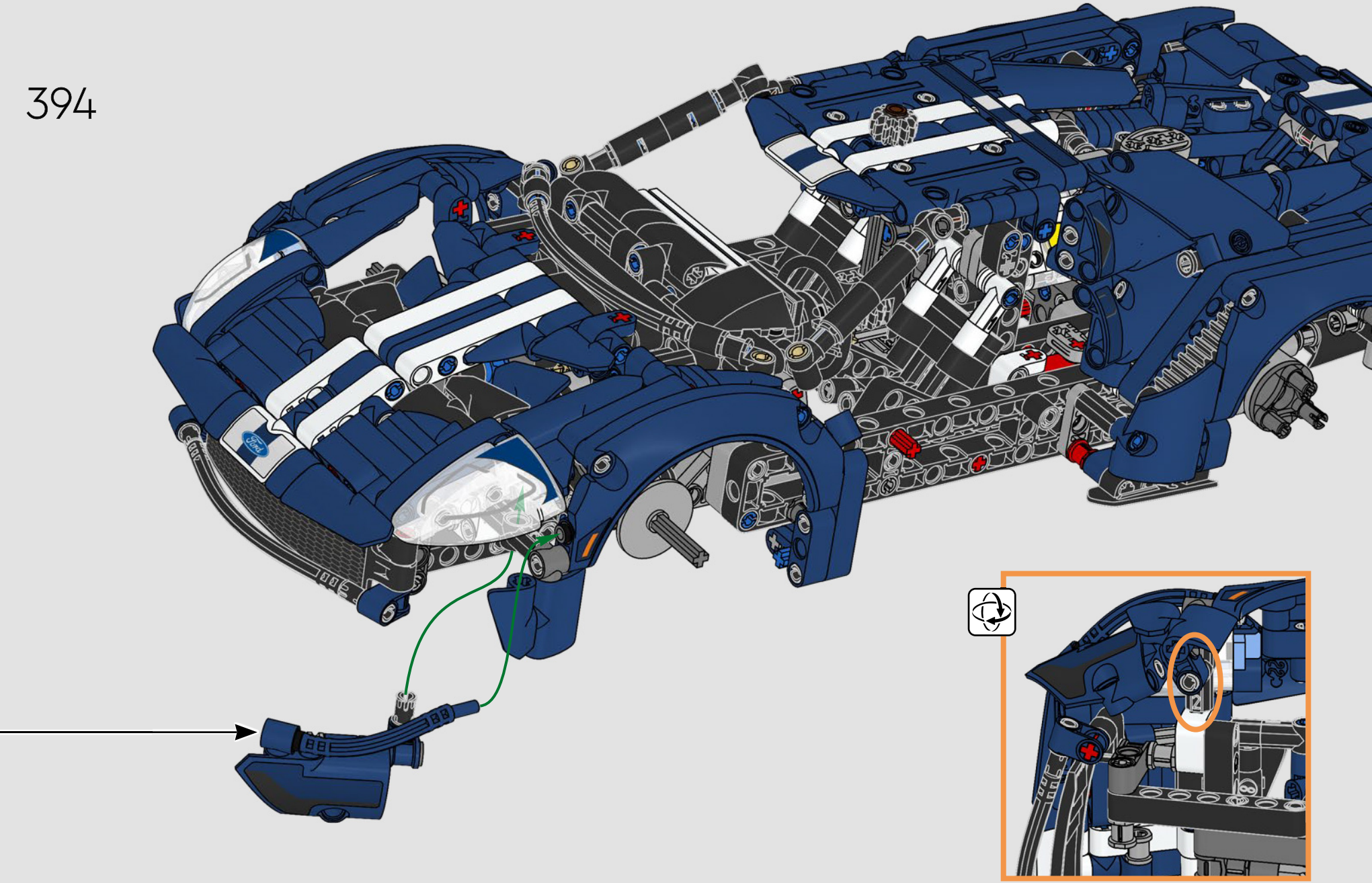

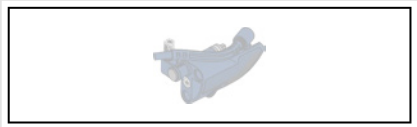

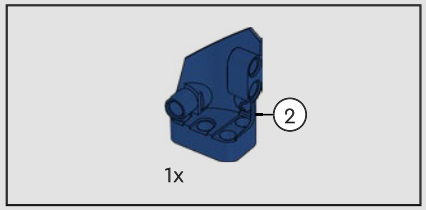

395

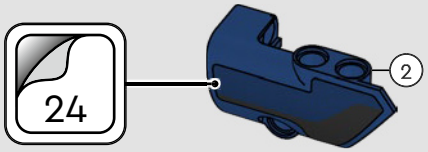

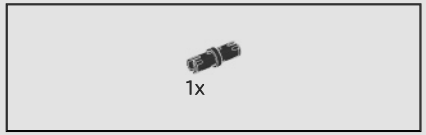

396

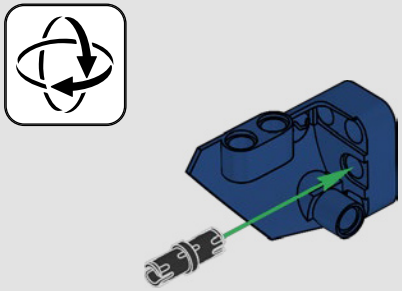

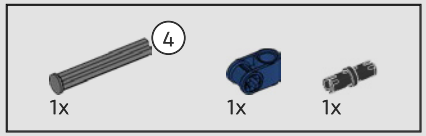

397

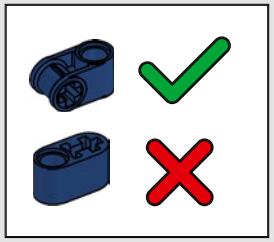

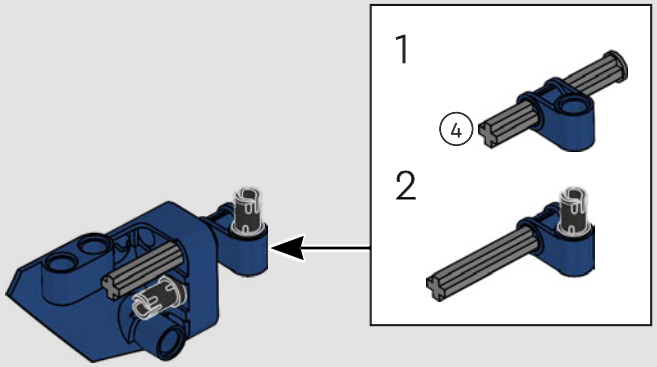

398

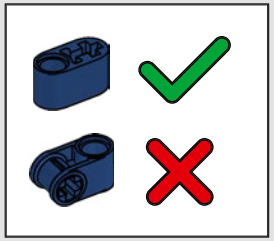

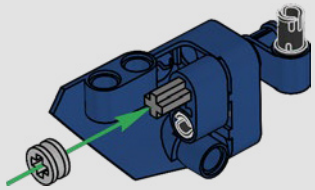

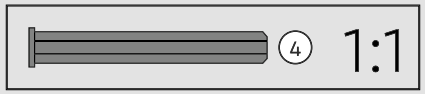

399

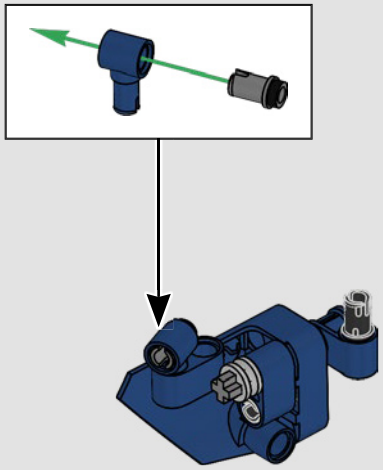

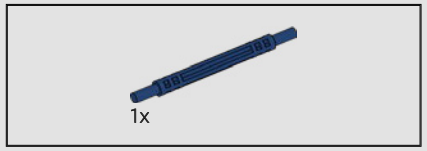

400

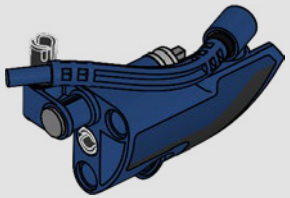

401

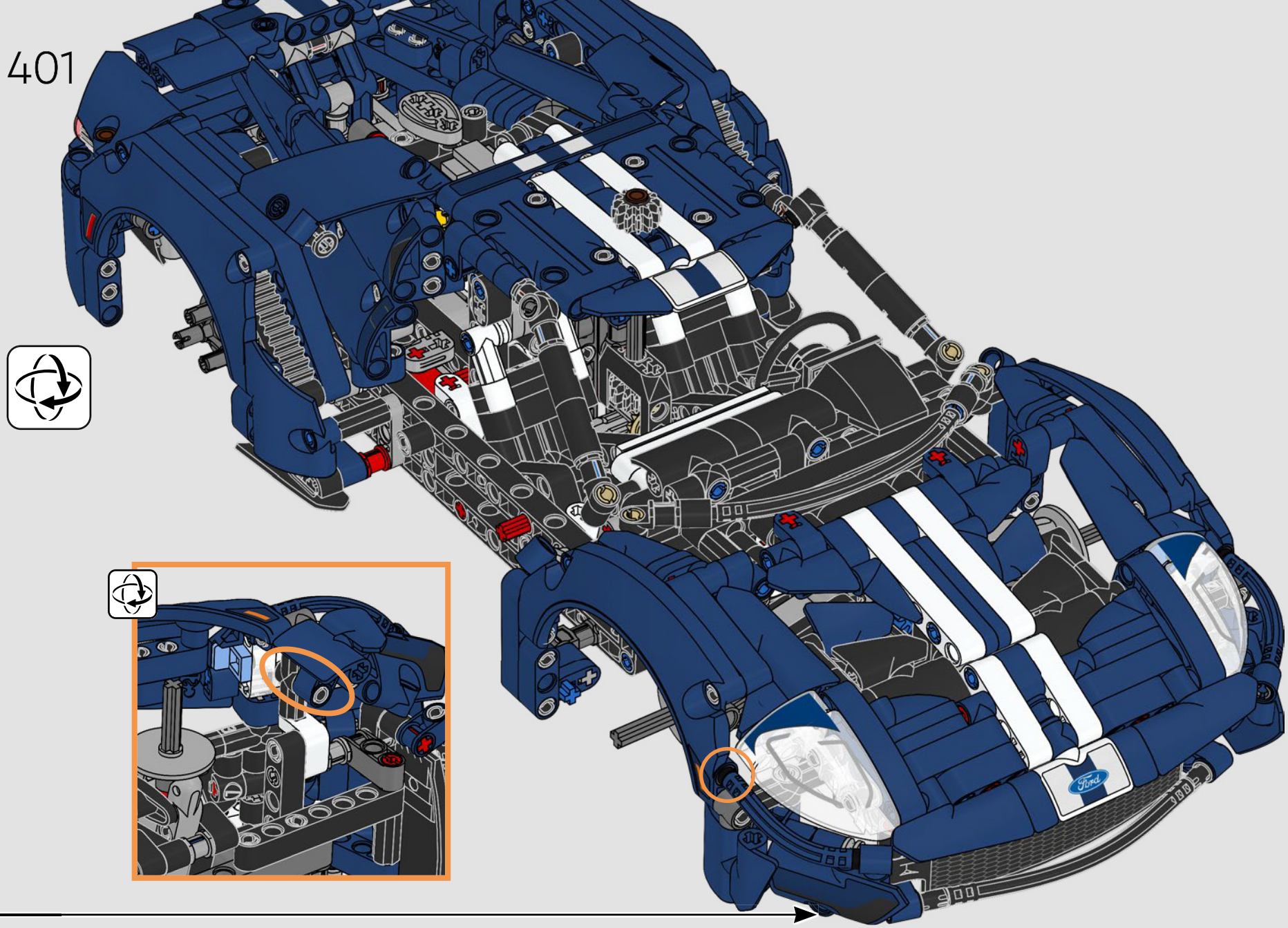

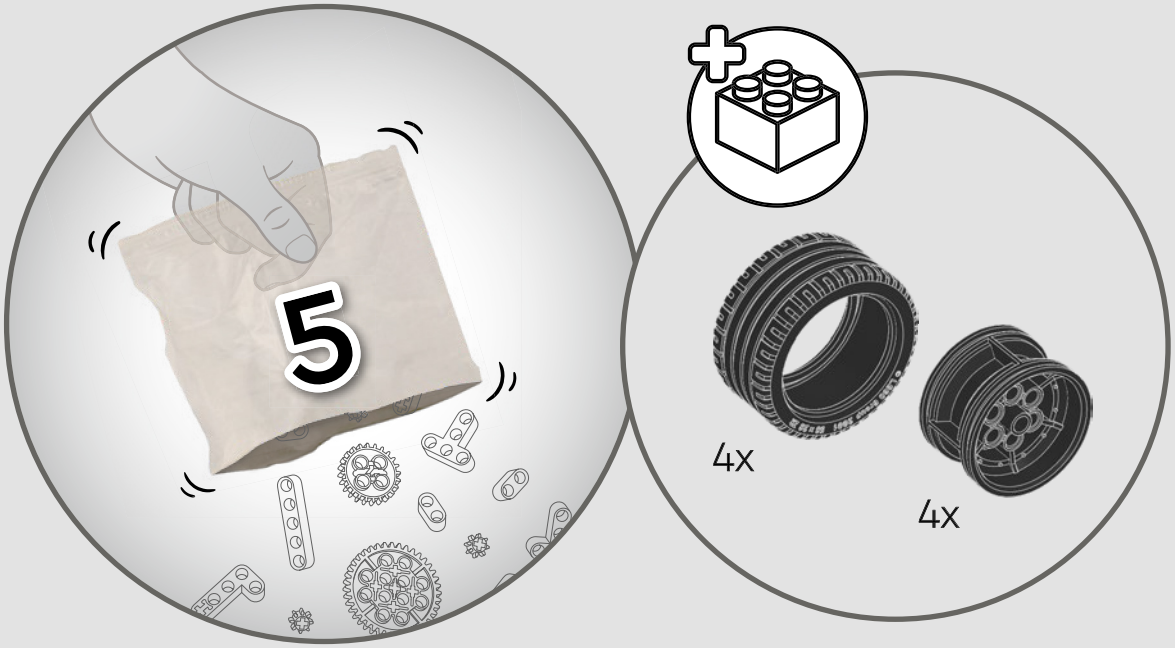
5
4x
4x

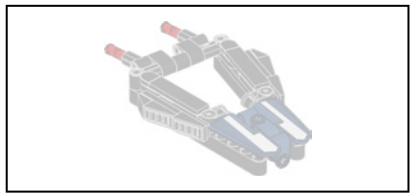

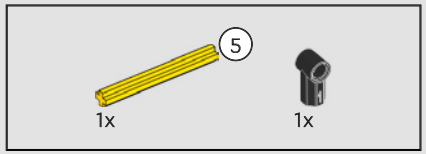

402

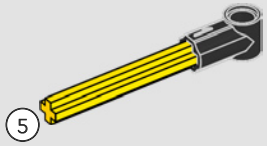

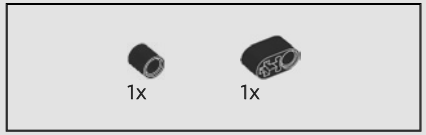

403

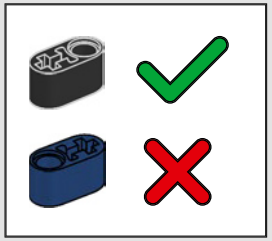

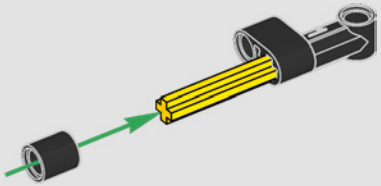

404

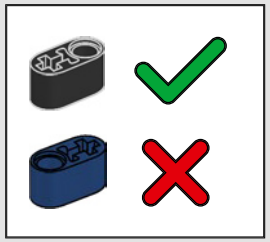

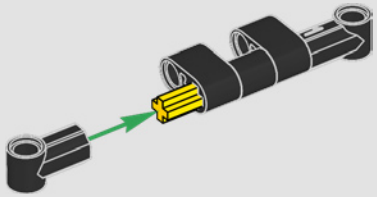

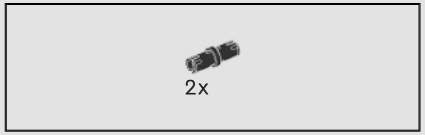

405

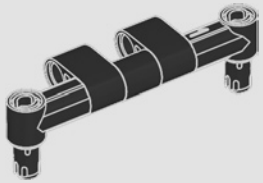

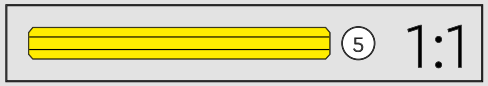

406

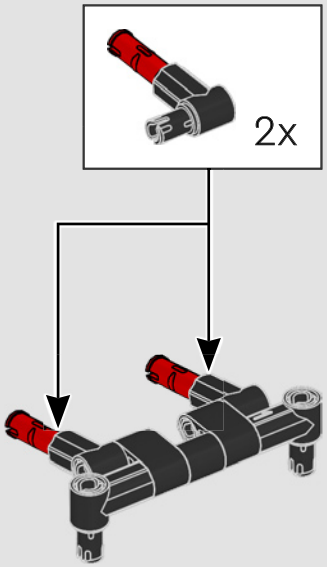

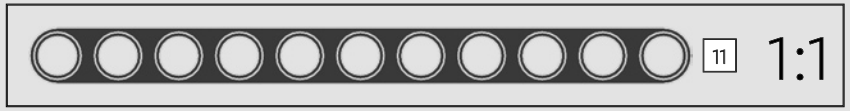

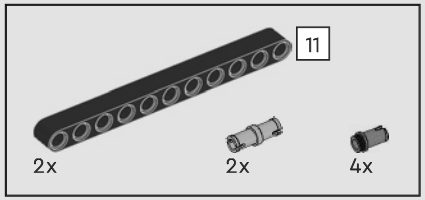

407

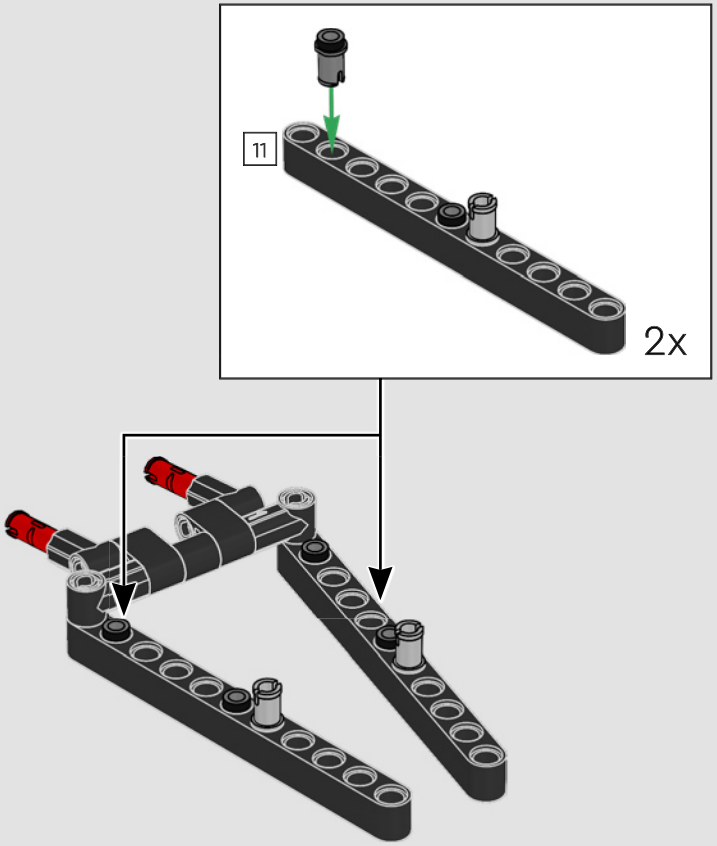

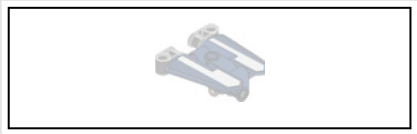

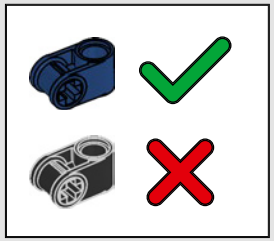

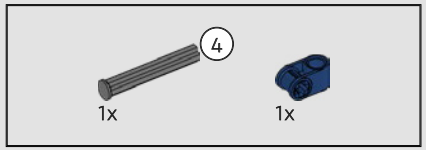

408

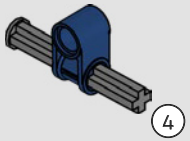

409

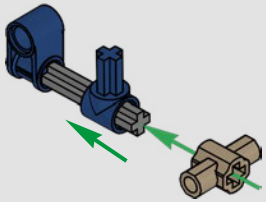

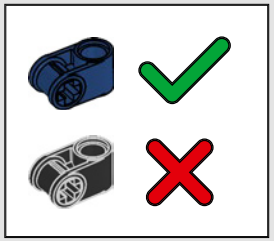

410

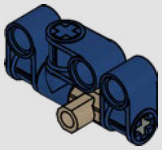

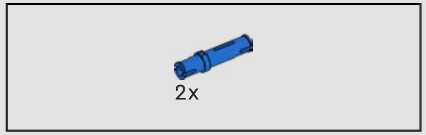

411

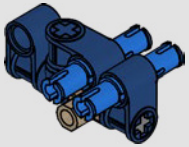

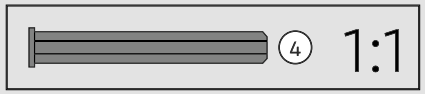

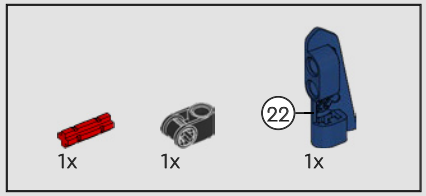

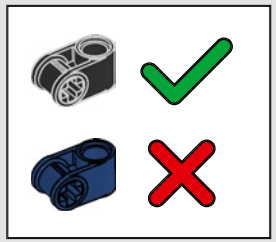

412

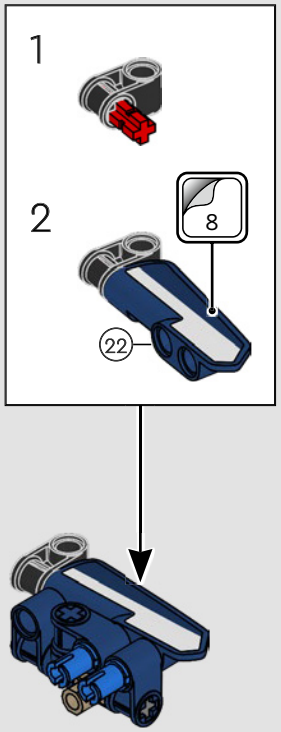

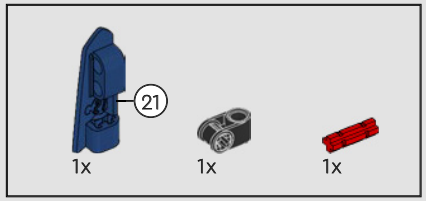

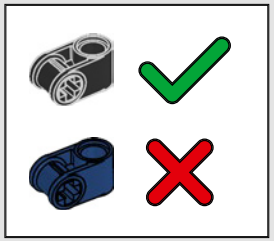

413

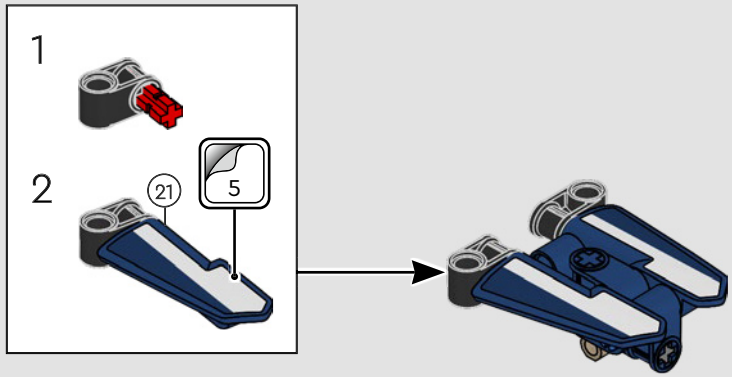

414

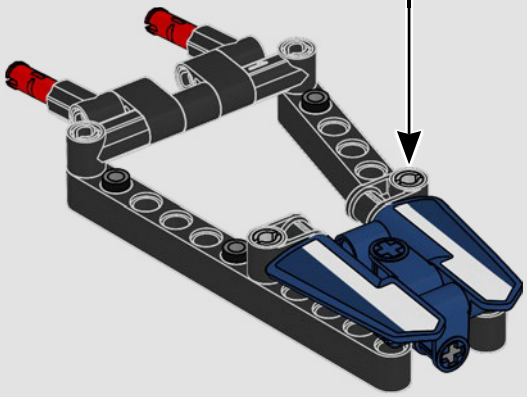

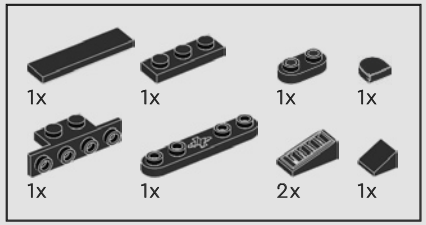

415

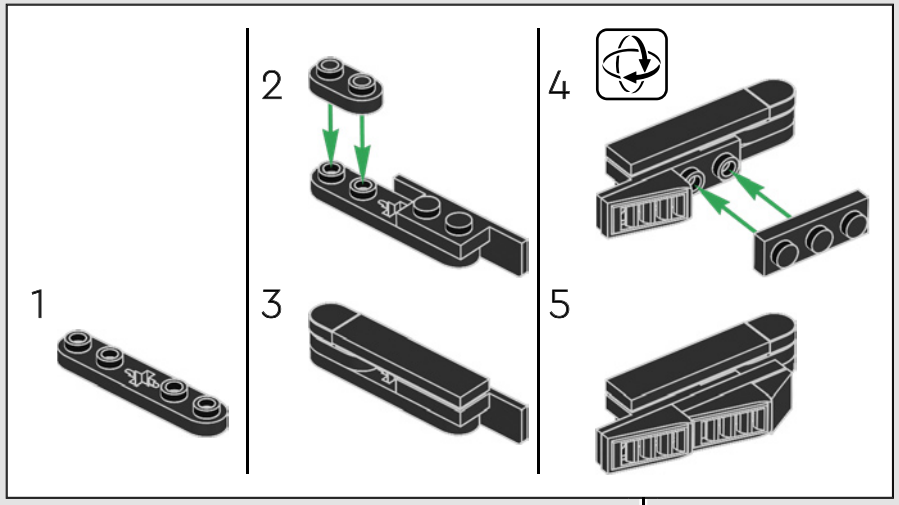

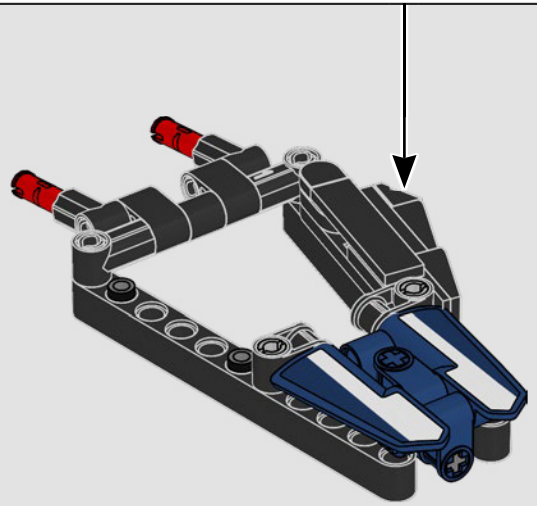

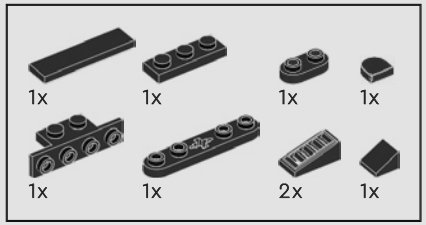

416

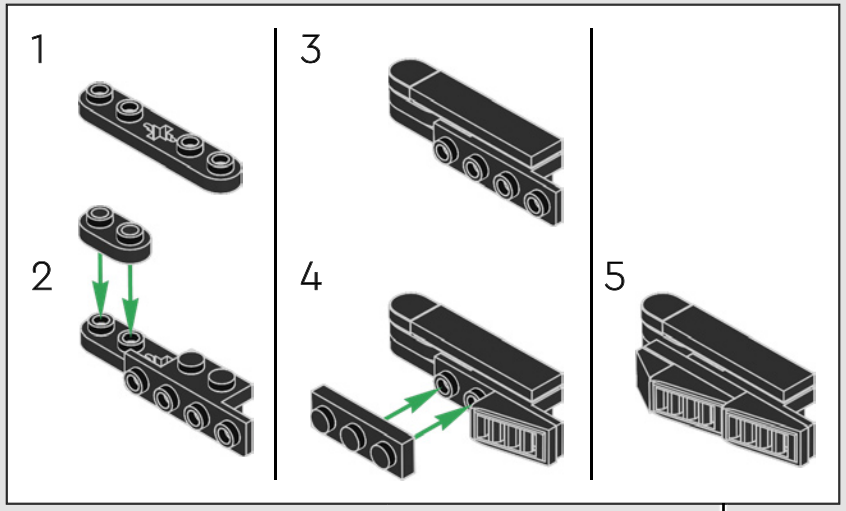

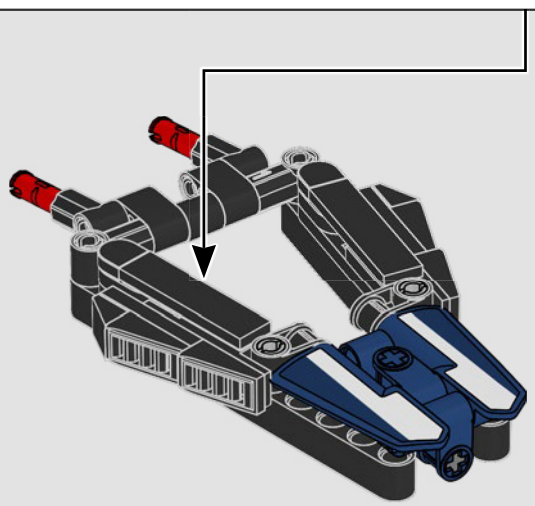

417

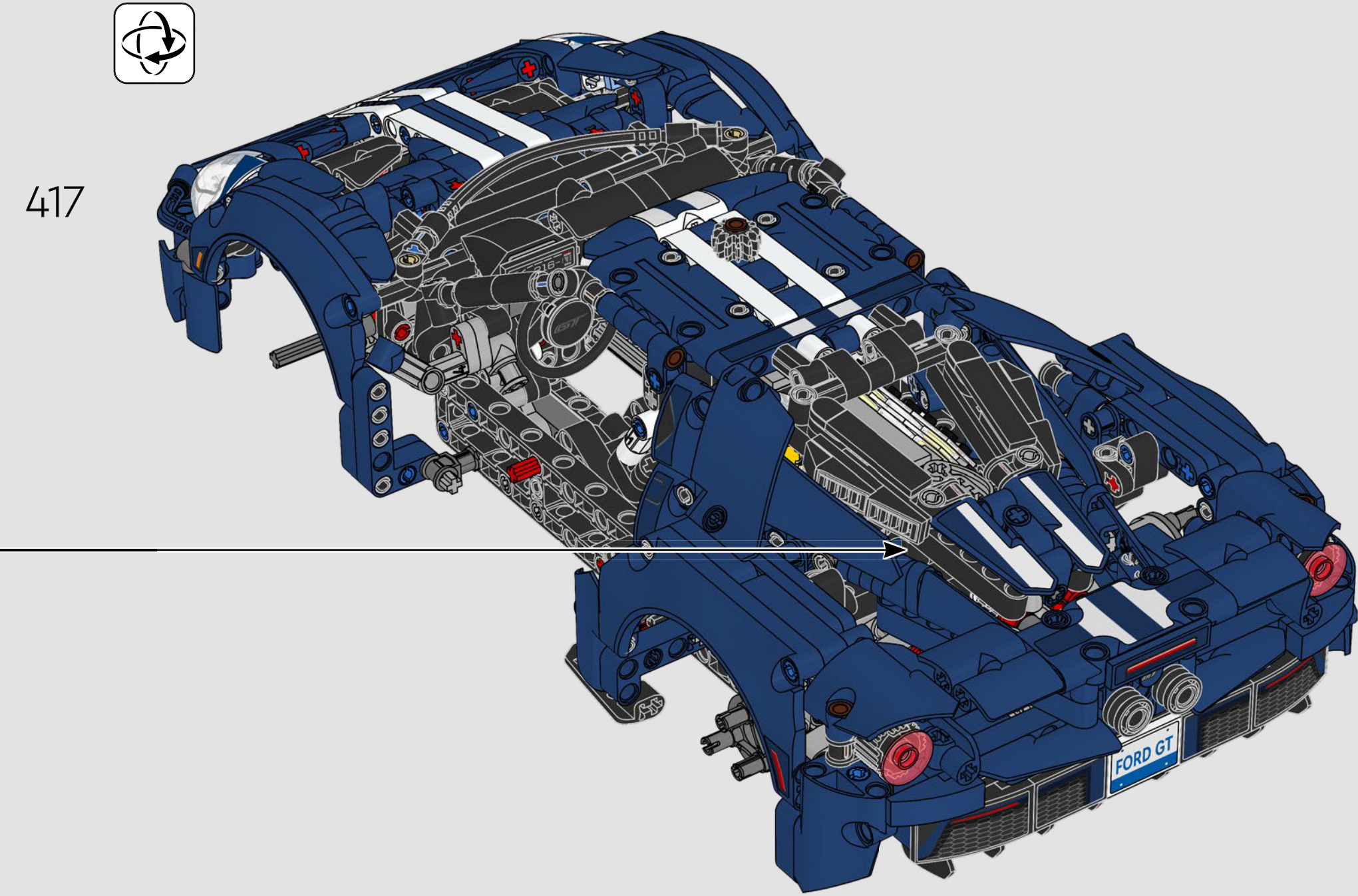

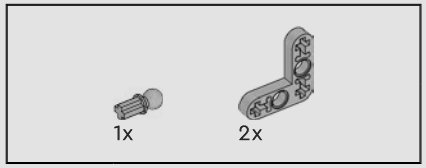

418

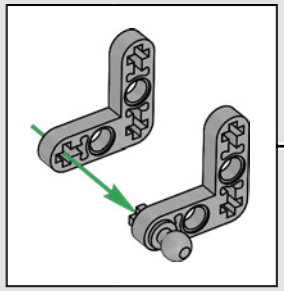

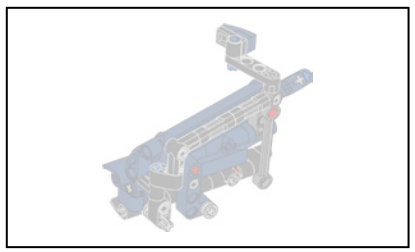

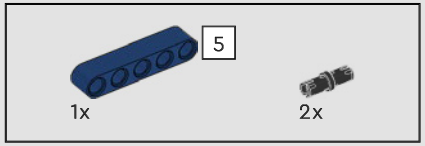

419

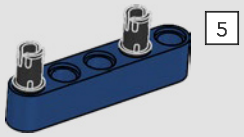

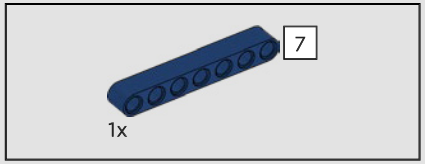

420

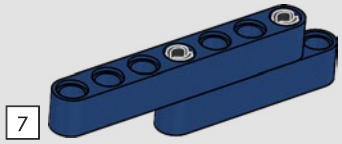

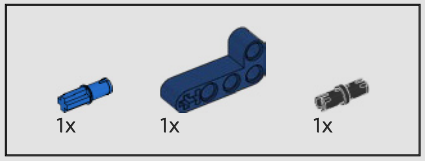

421

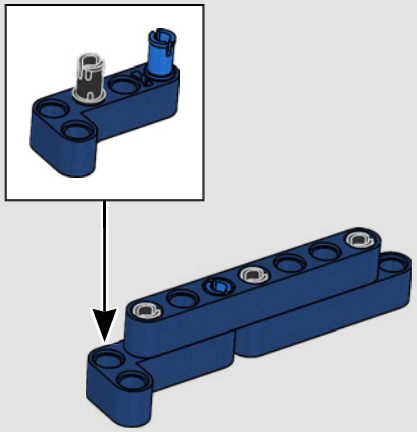

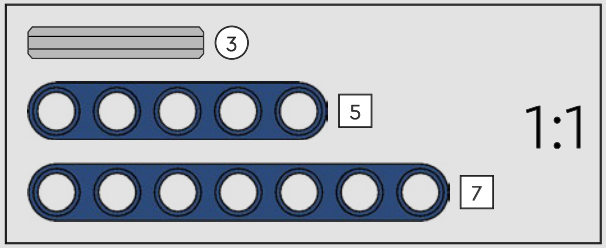

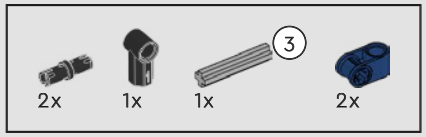

422

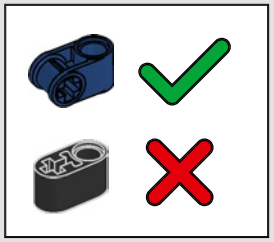

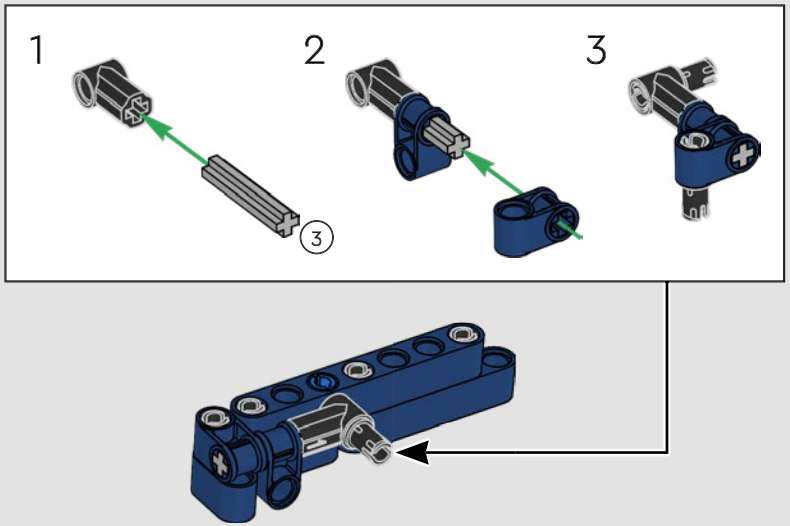

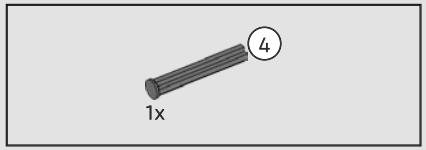

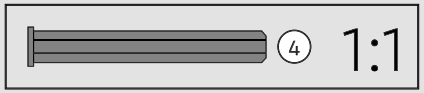

423

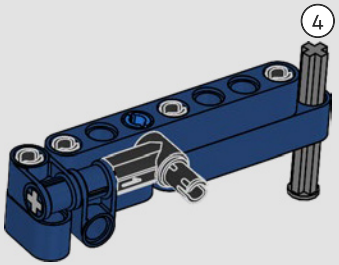

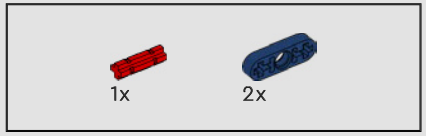

424

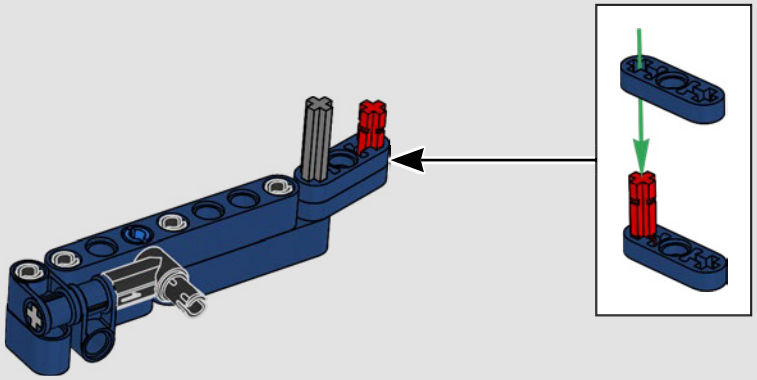

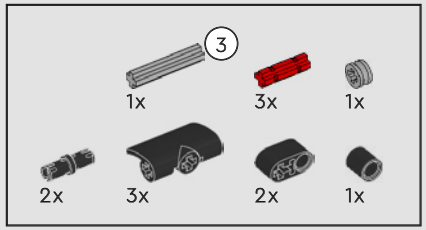

425

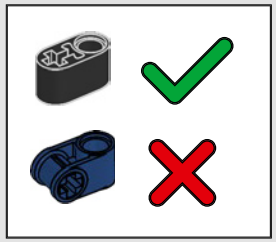

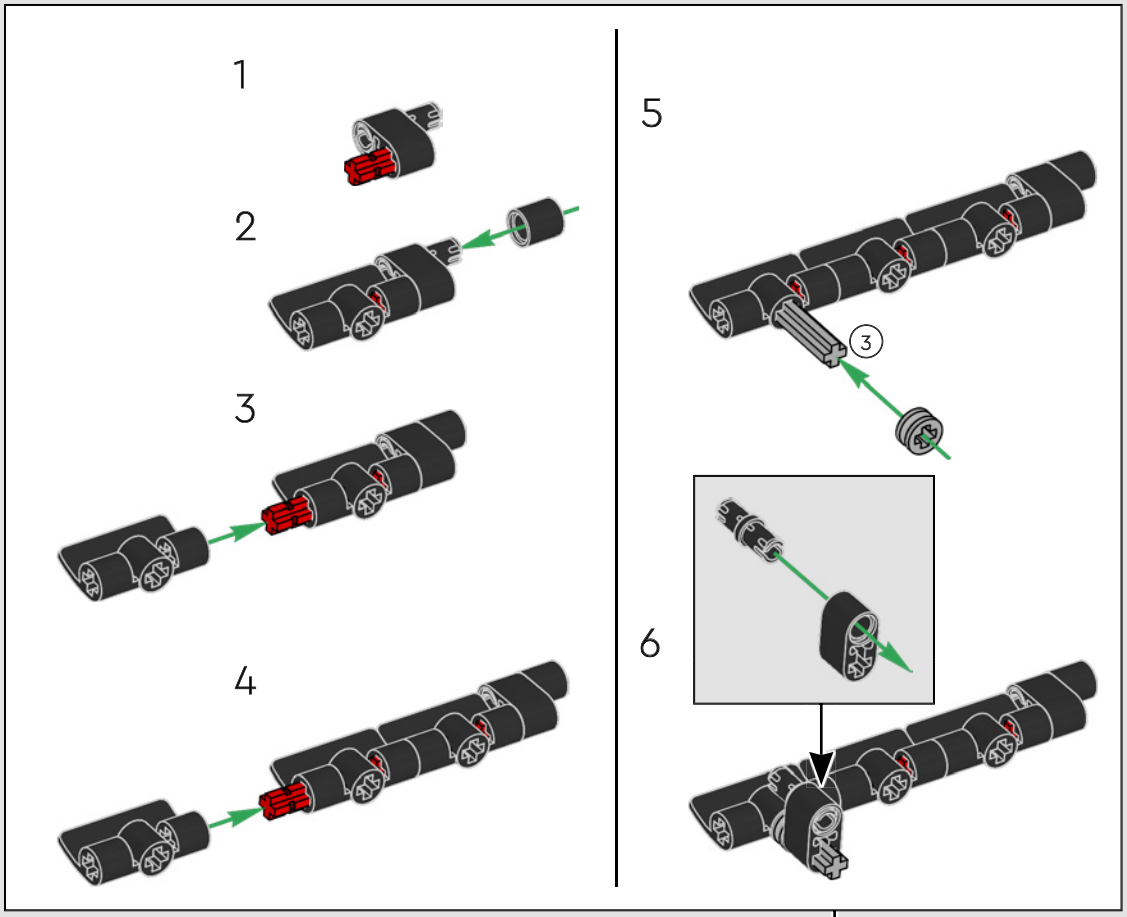

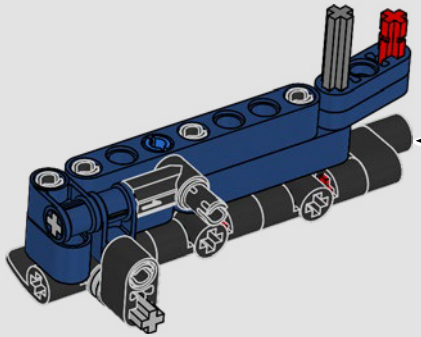

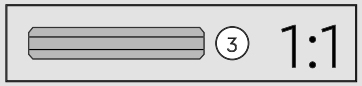

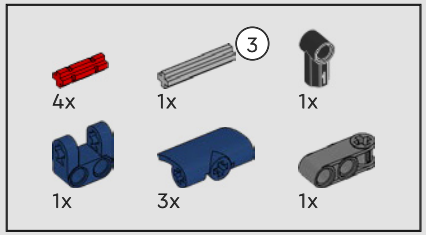

426

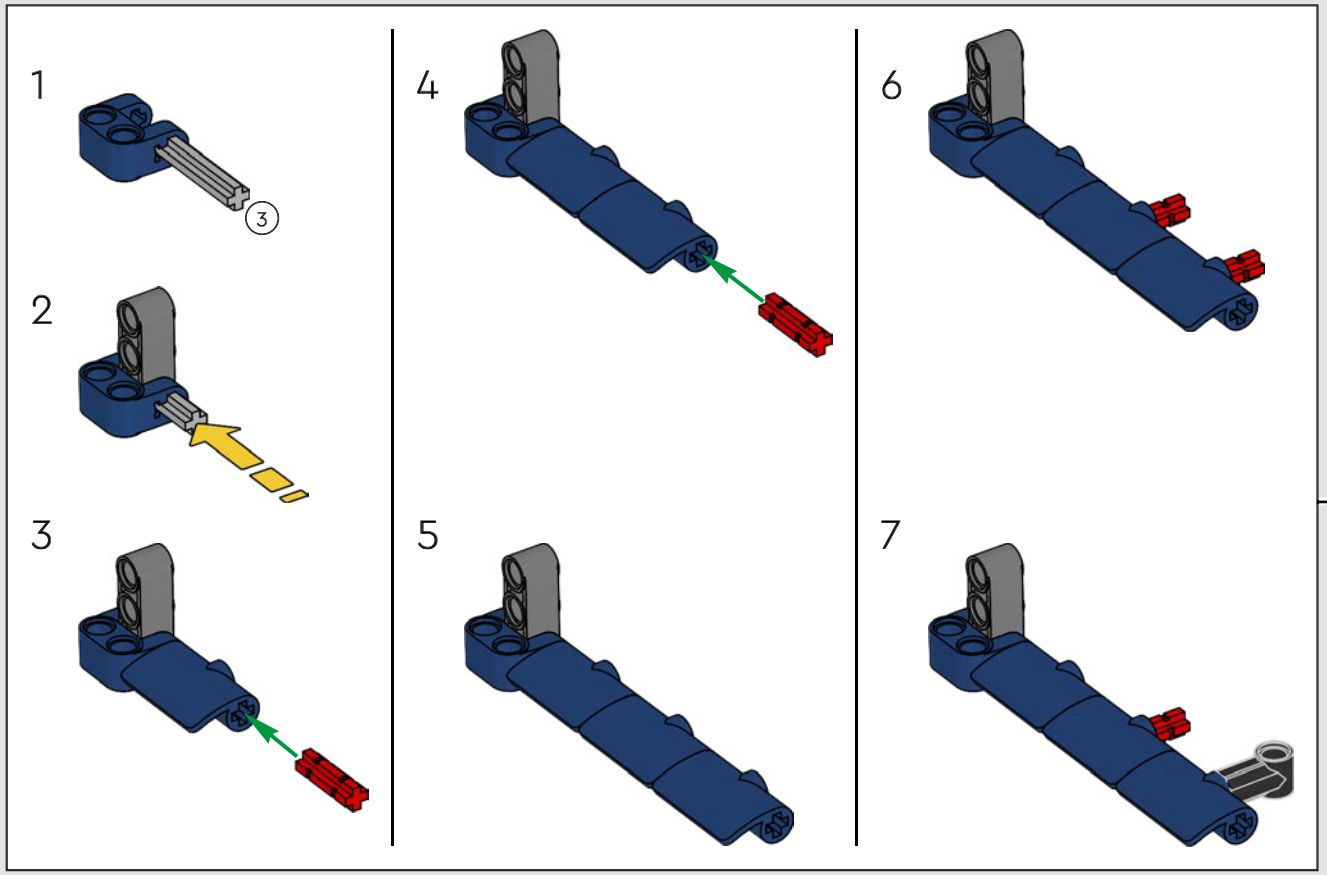

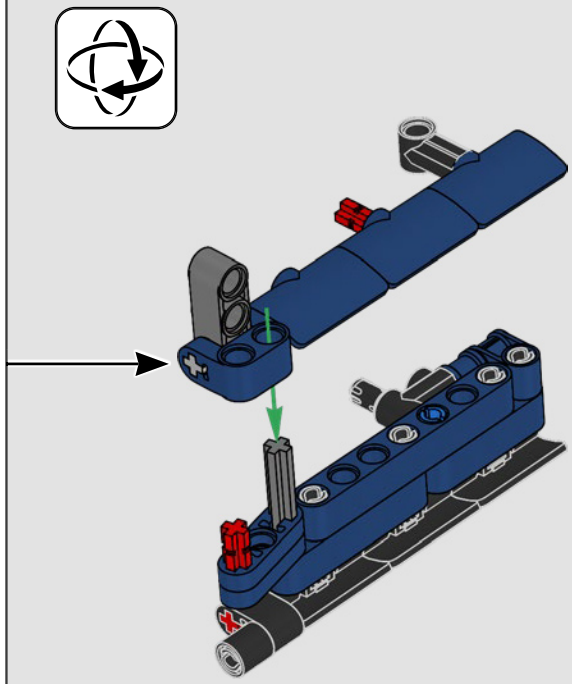

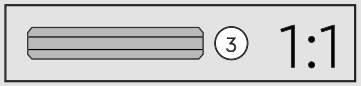

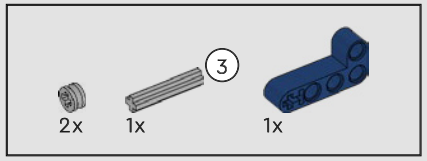

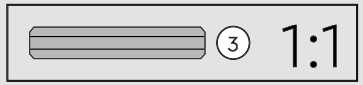

427

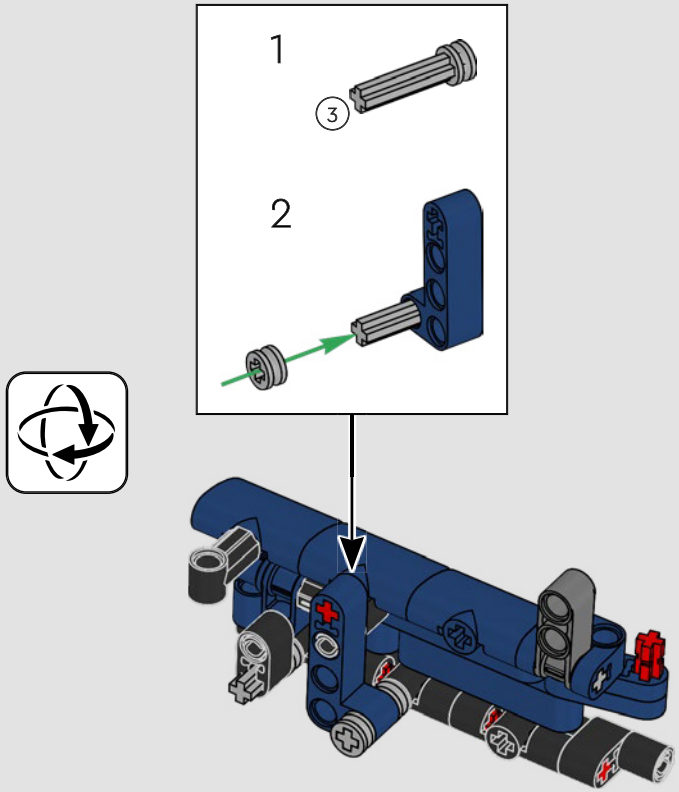

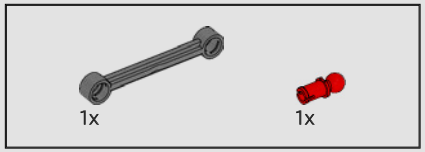

428

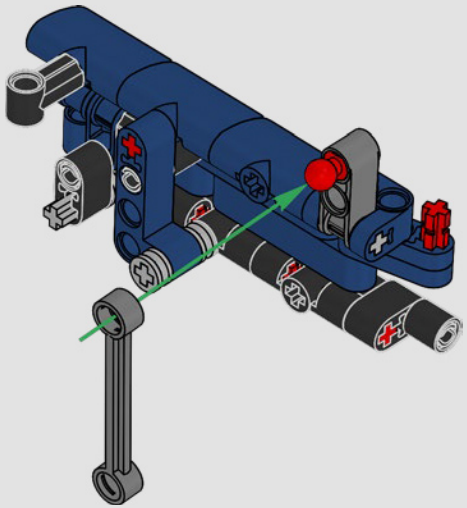

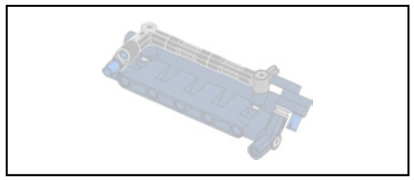

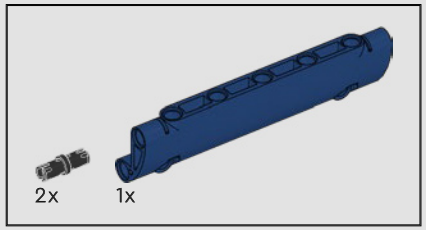

429

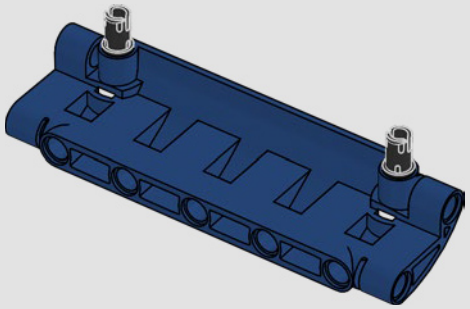

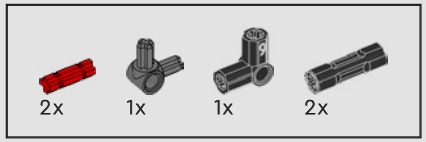

430

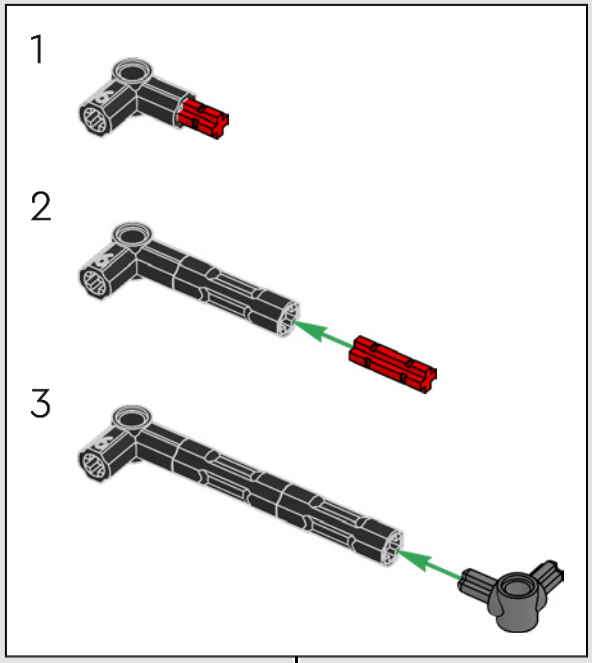

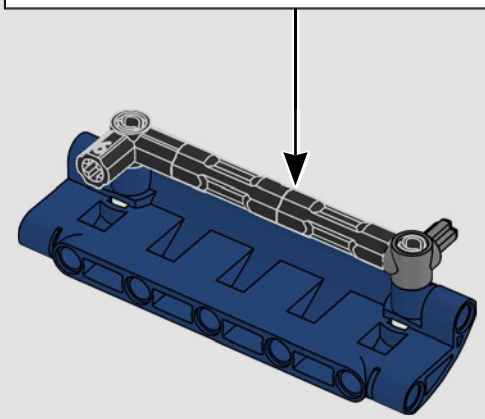

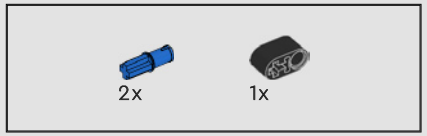

431

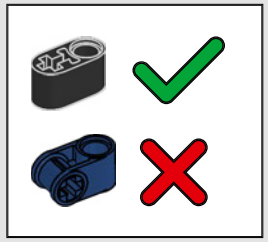

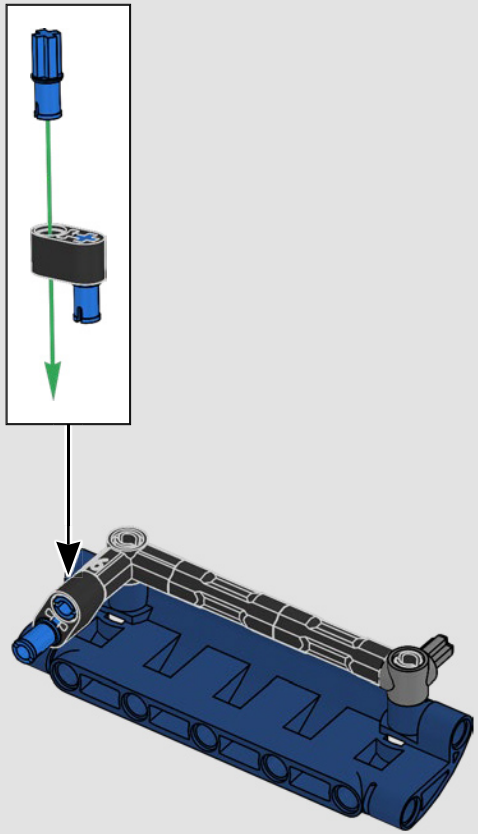

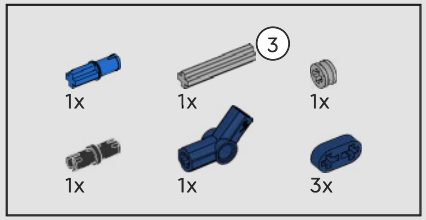

432

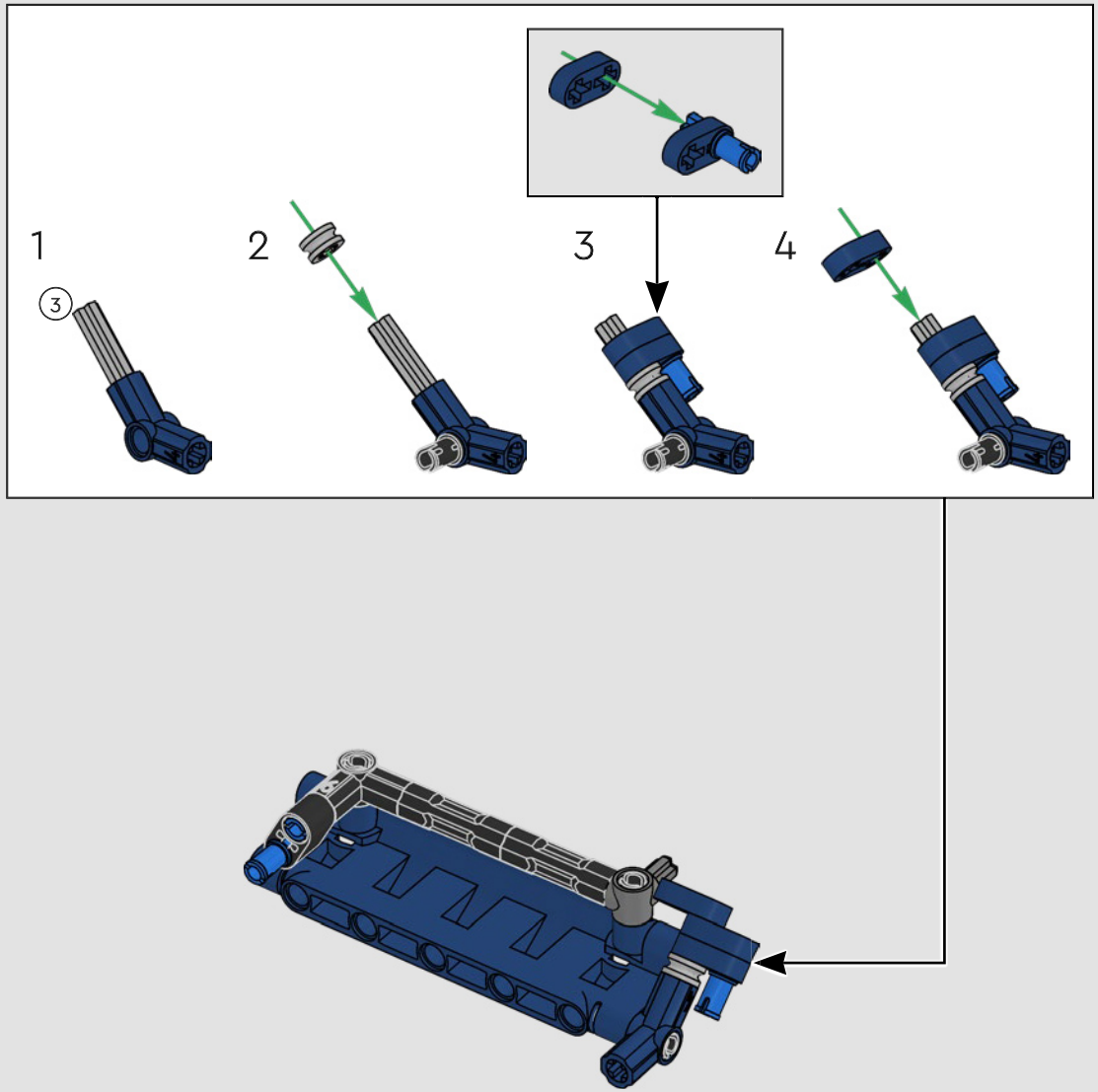

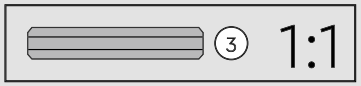

433

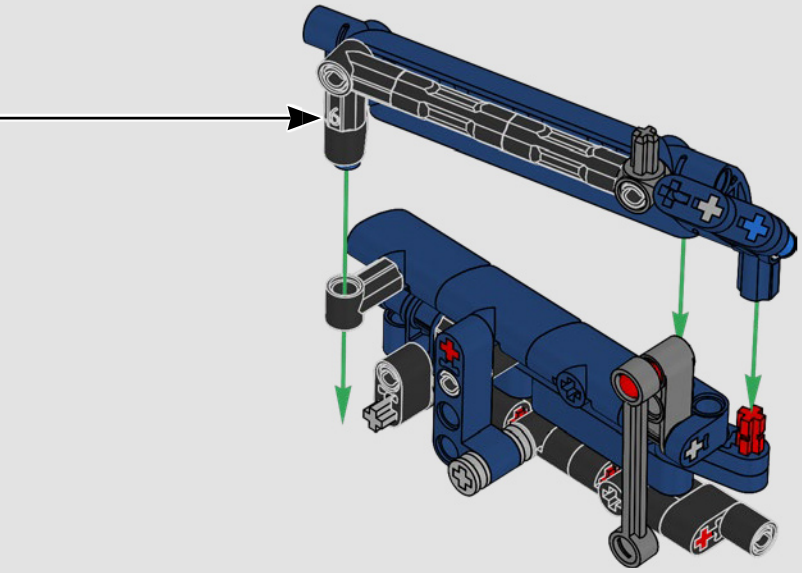

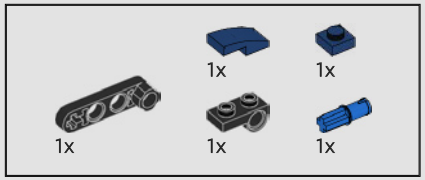

434

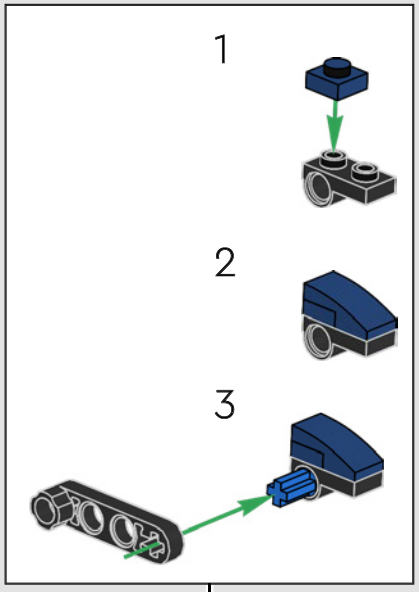

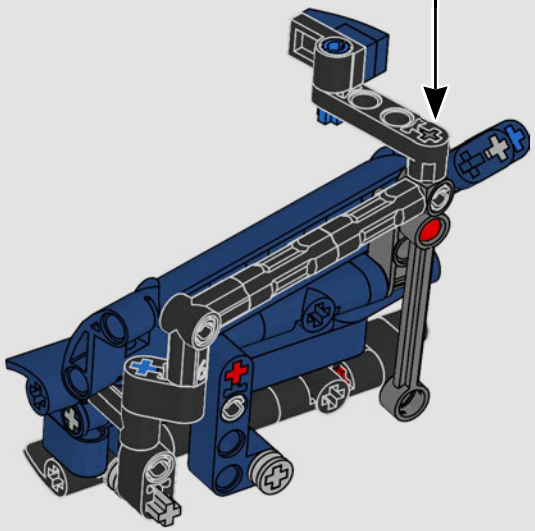

435

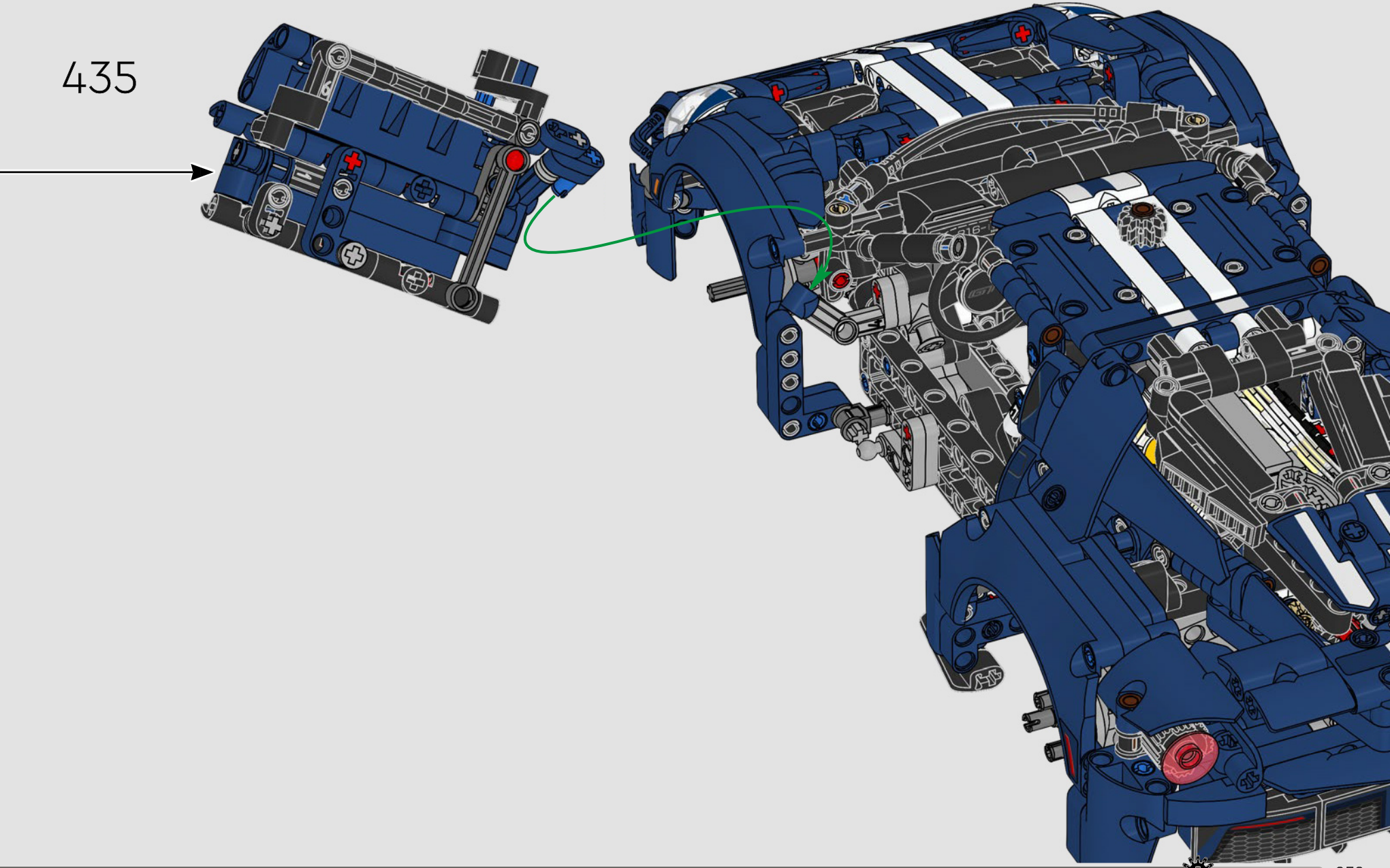

436

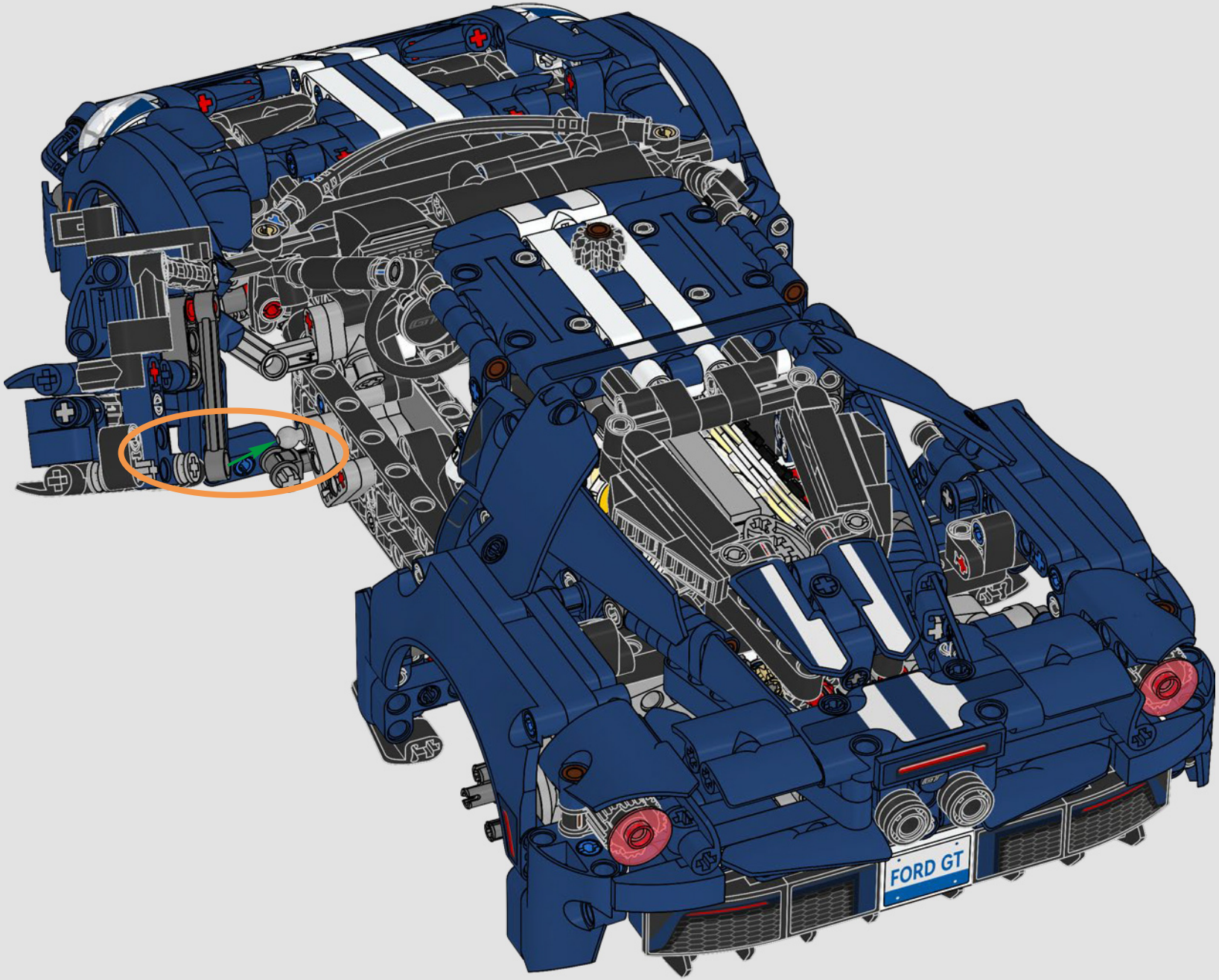

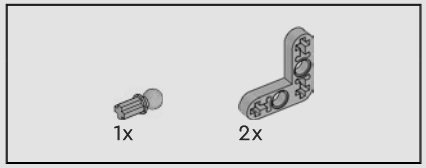

437

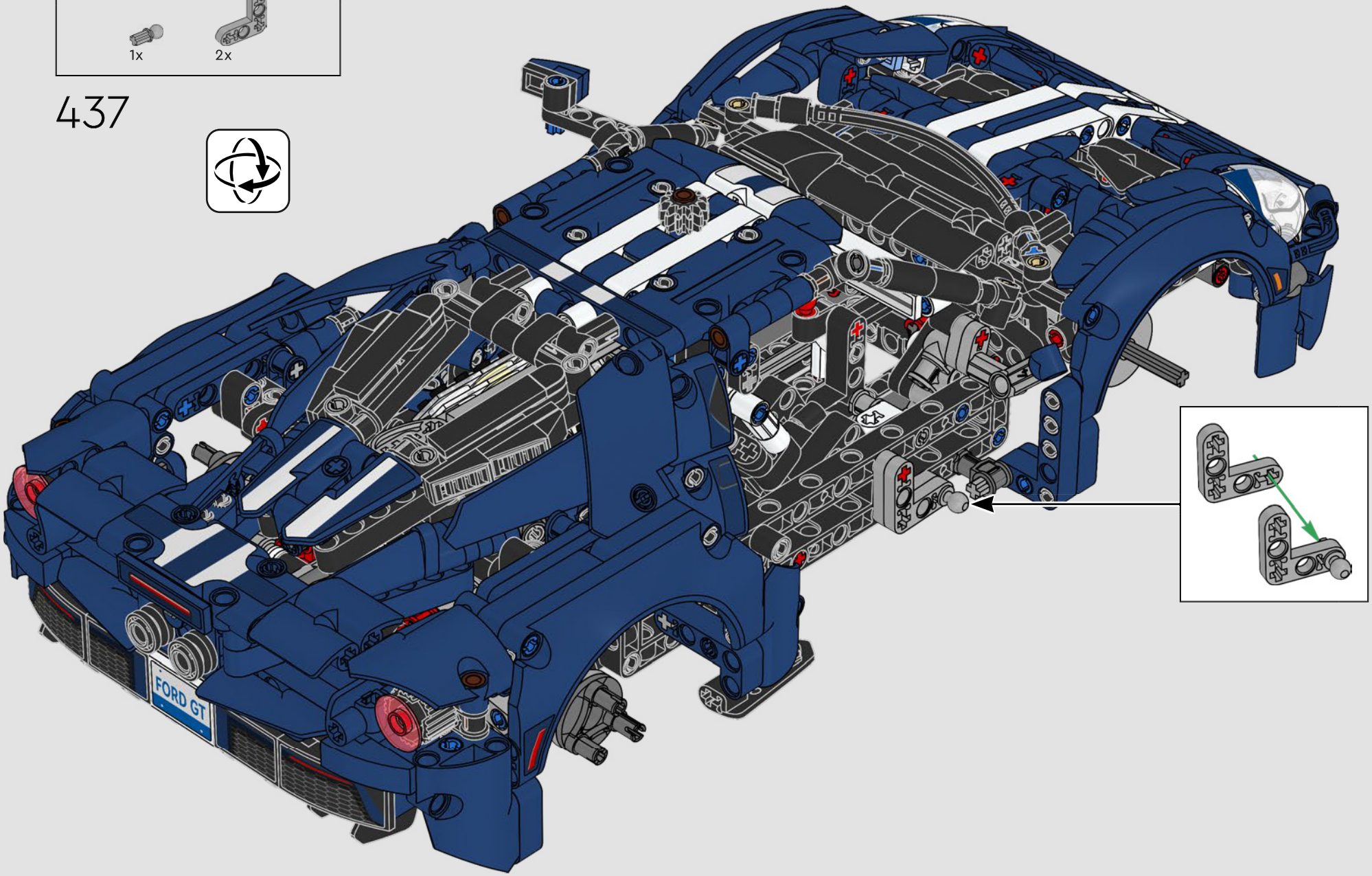

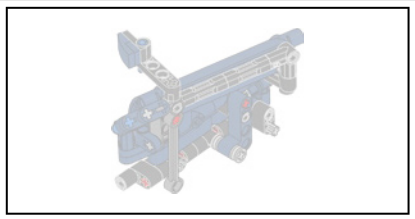

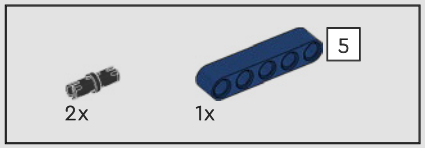

438

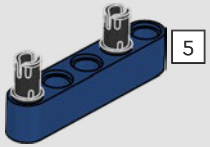

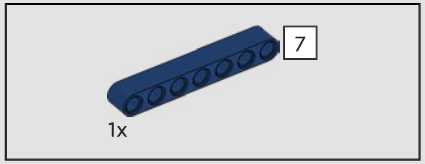

439

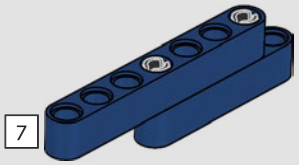

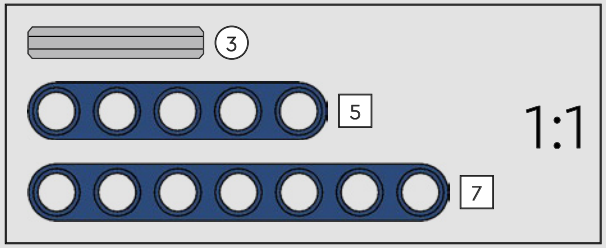

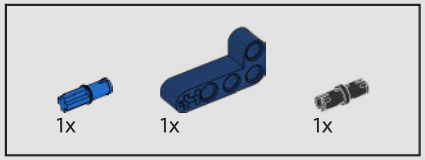

440

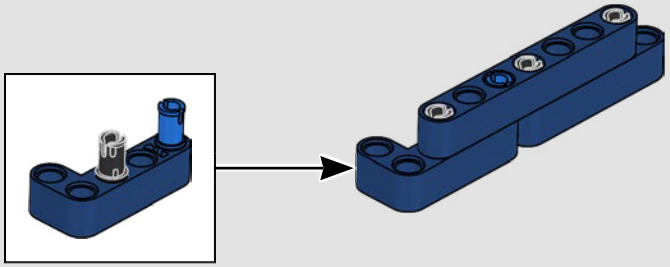

441

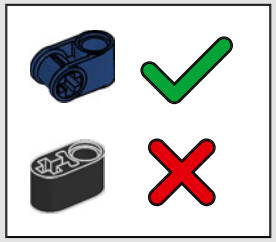

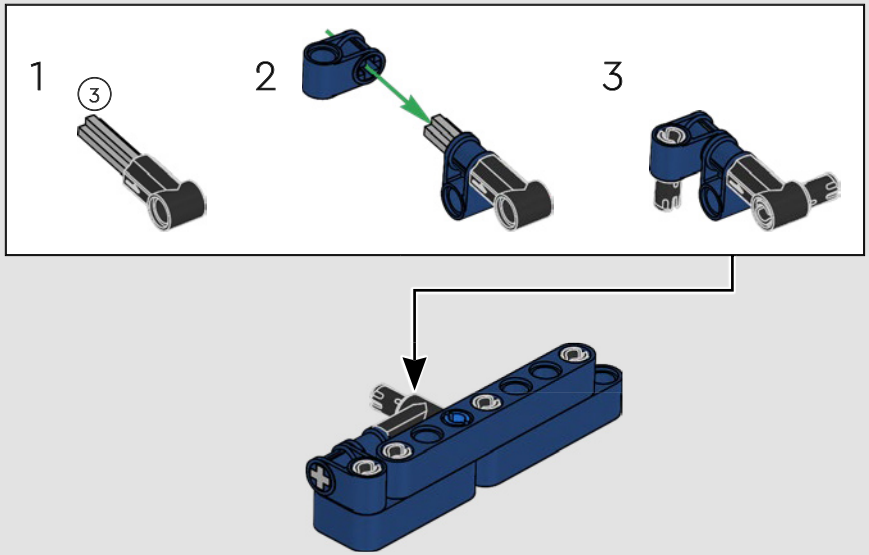

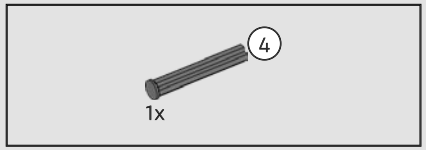

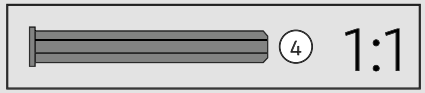

442

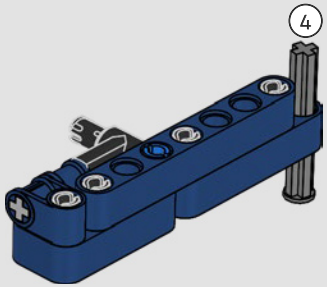

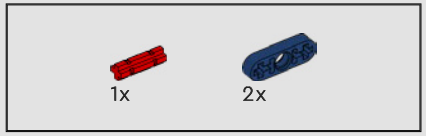

443

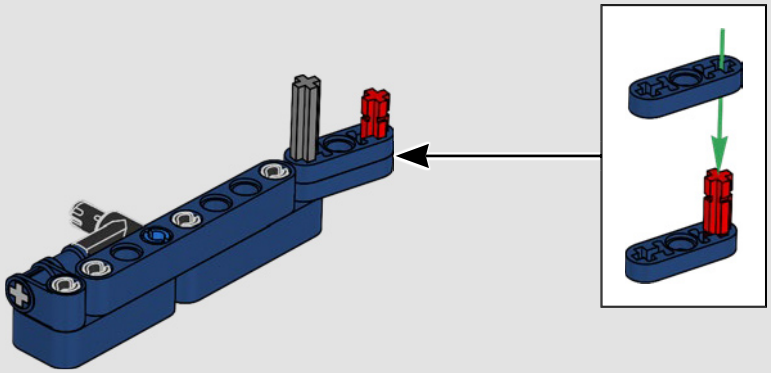

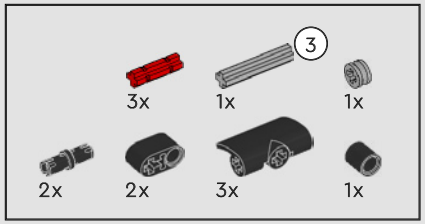

444

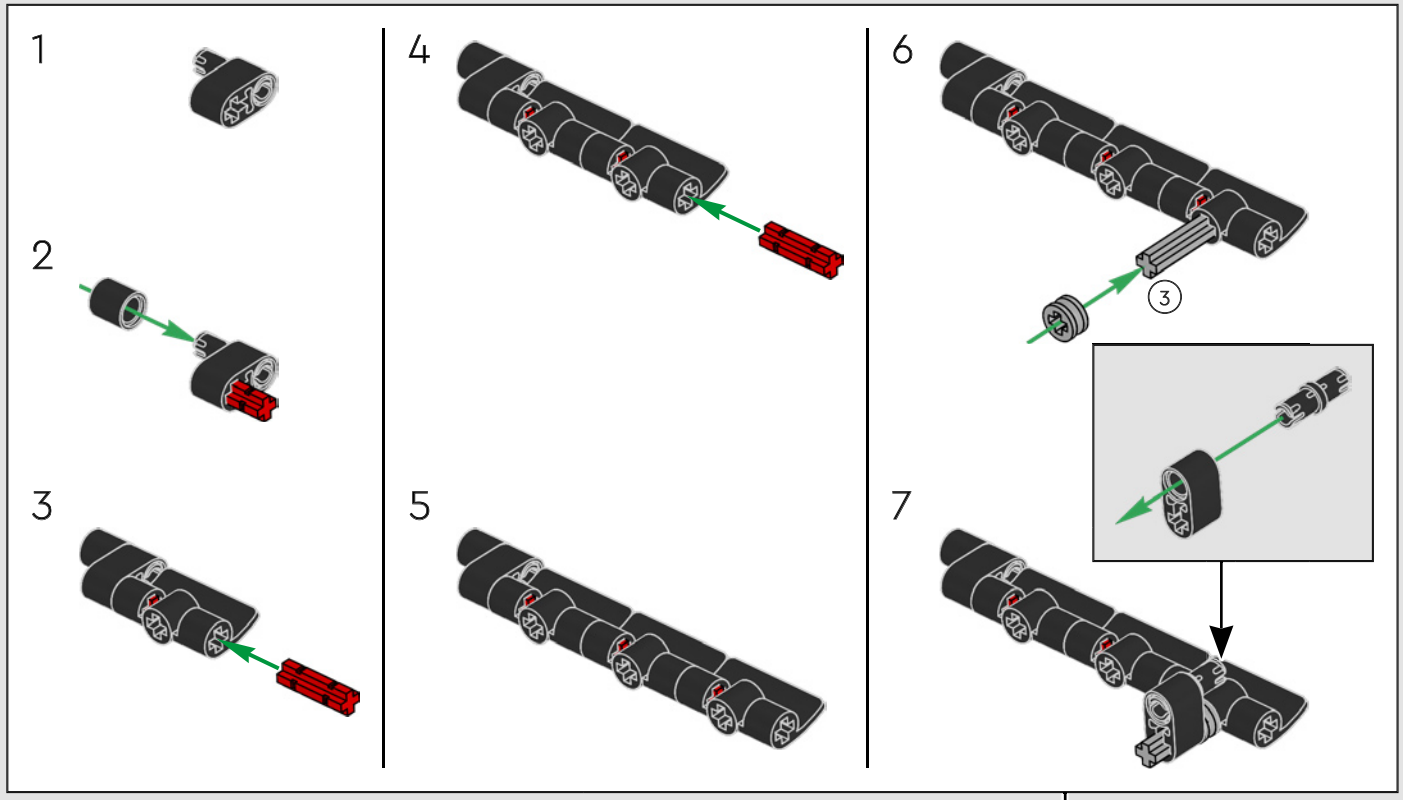

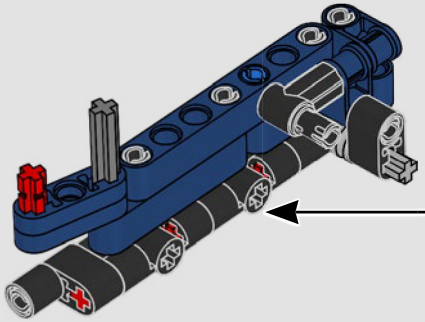

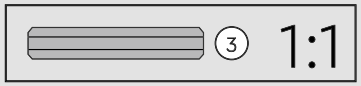

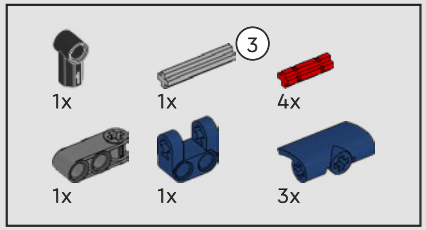

445

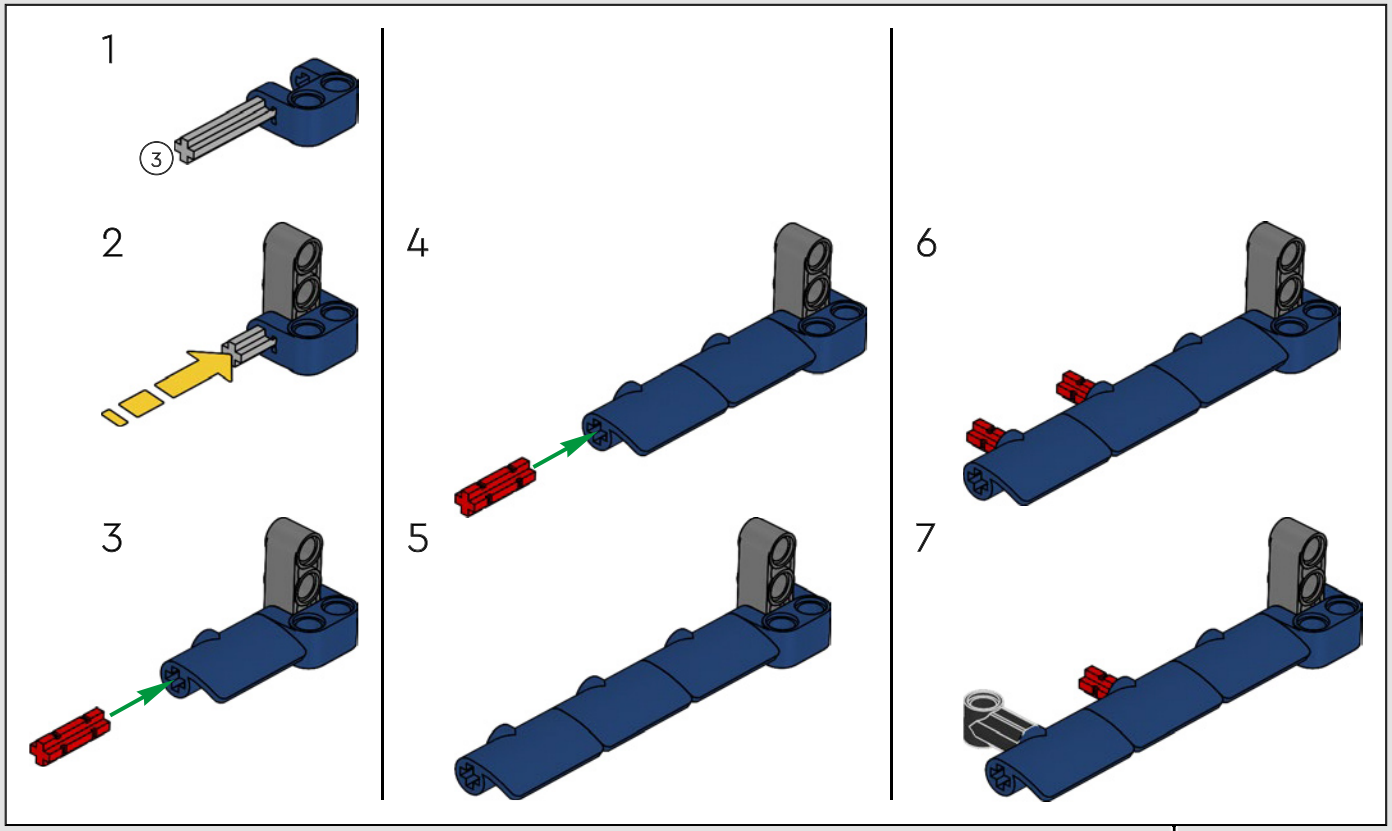

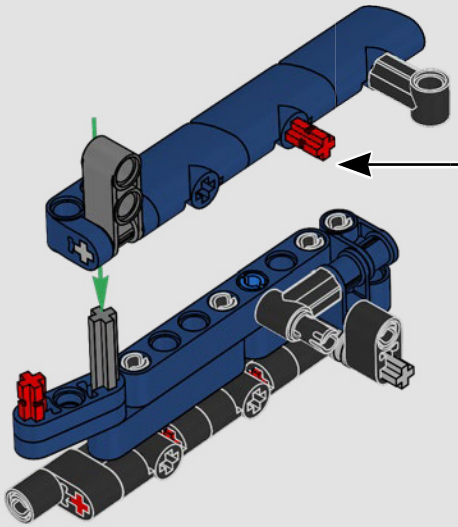

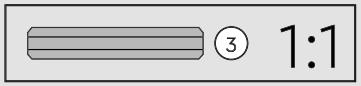

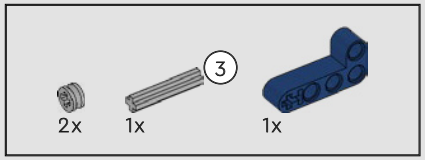

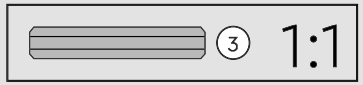

446

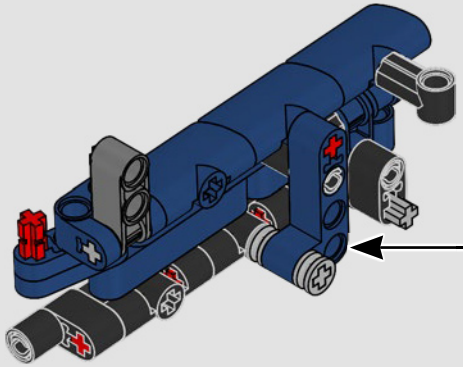

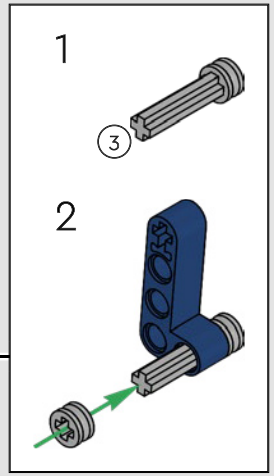

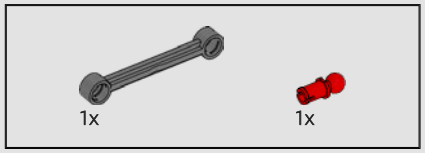

447

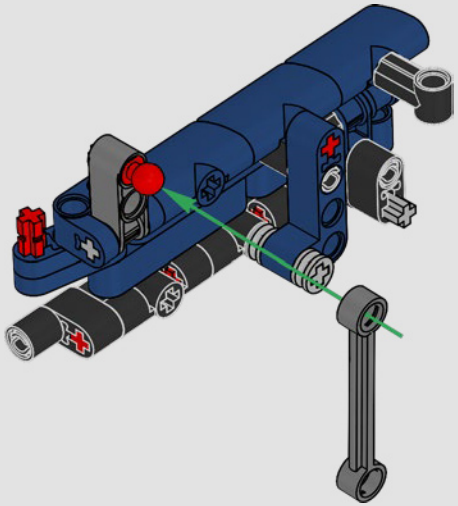

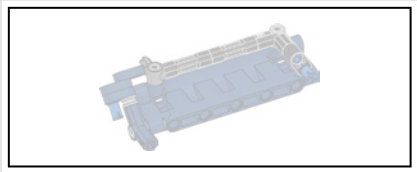

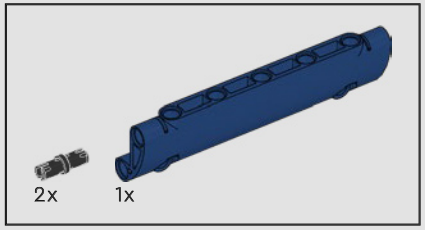

448

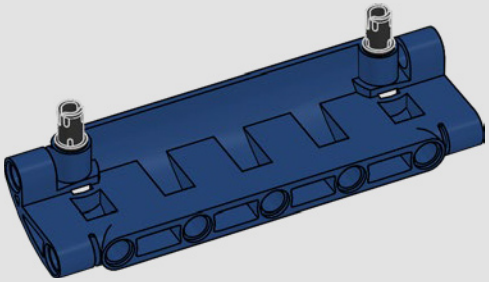

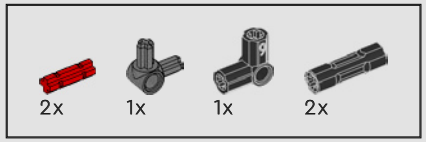

449

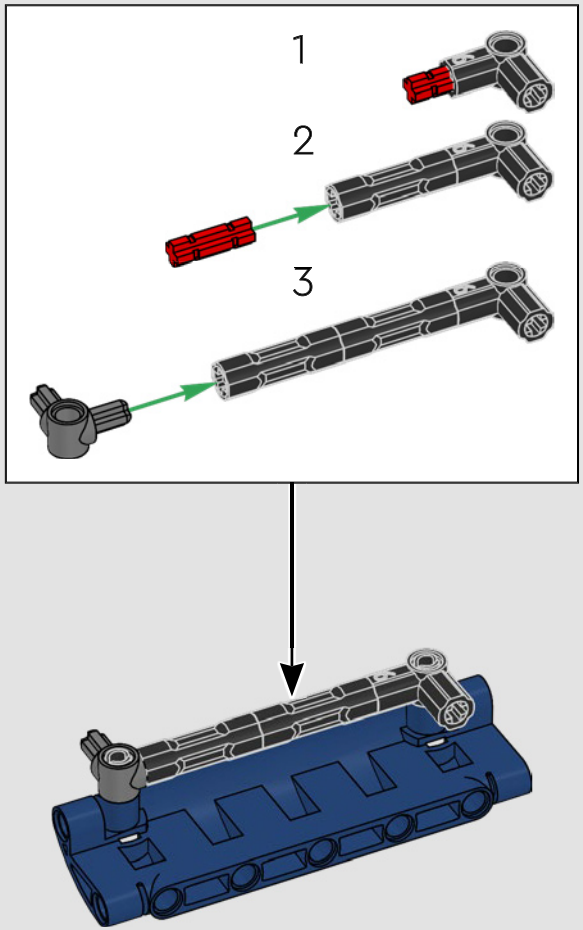

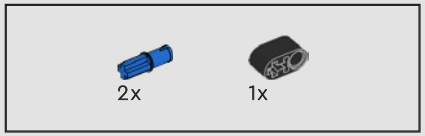

450

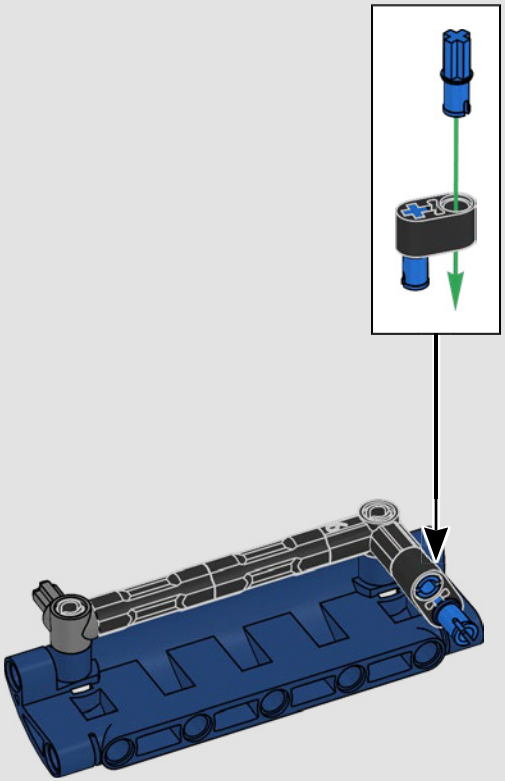

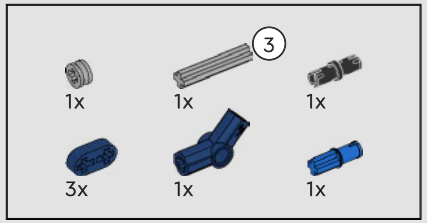

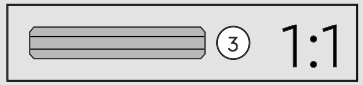

451

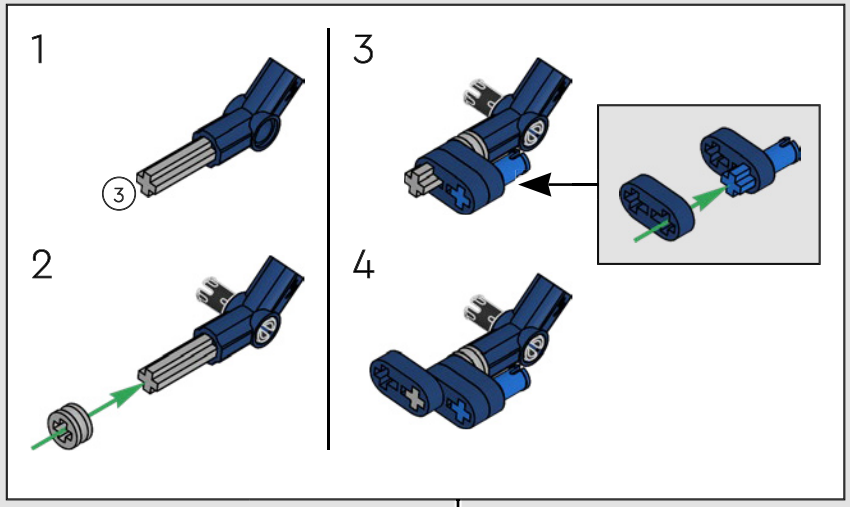

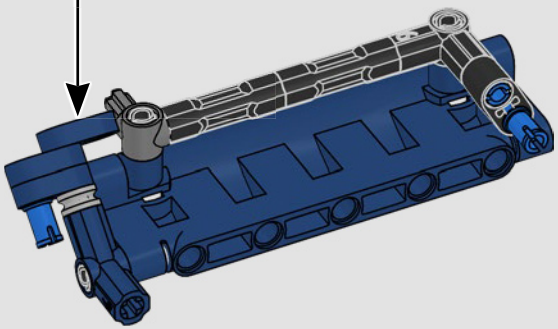

452

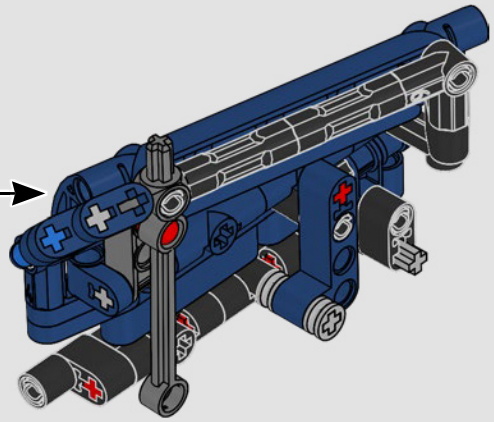

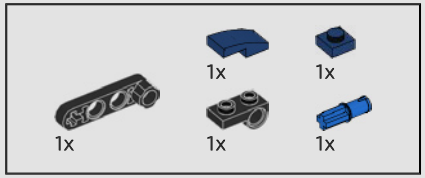

453

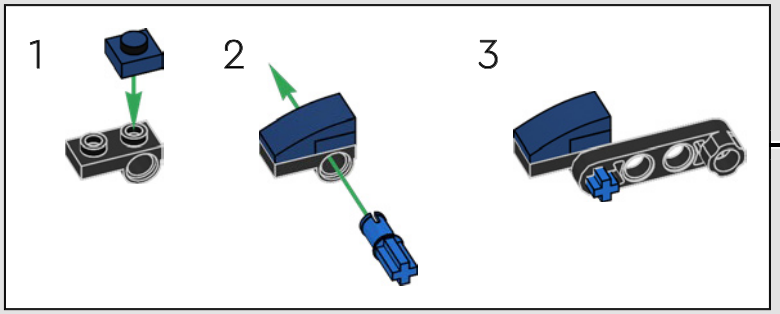

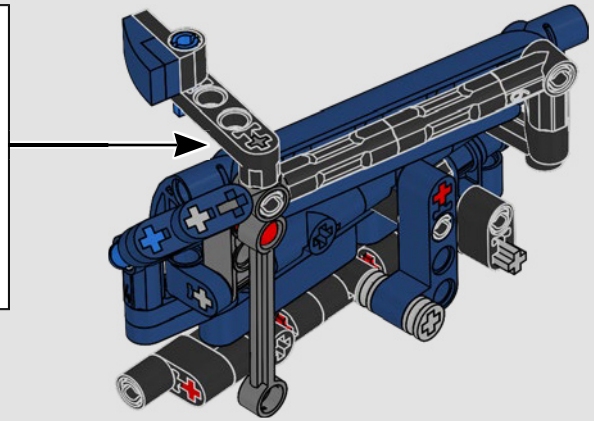

454

455

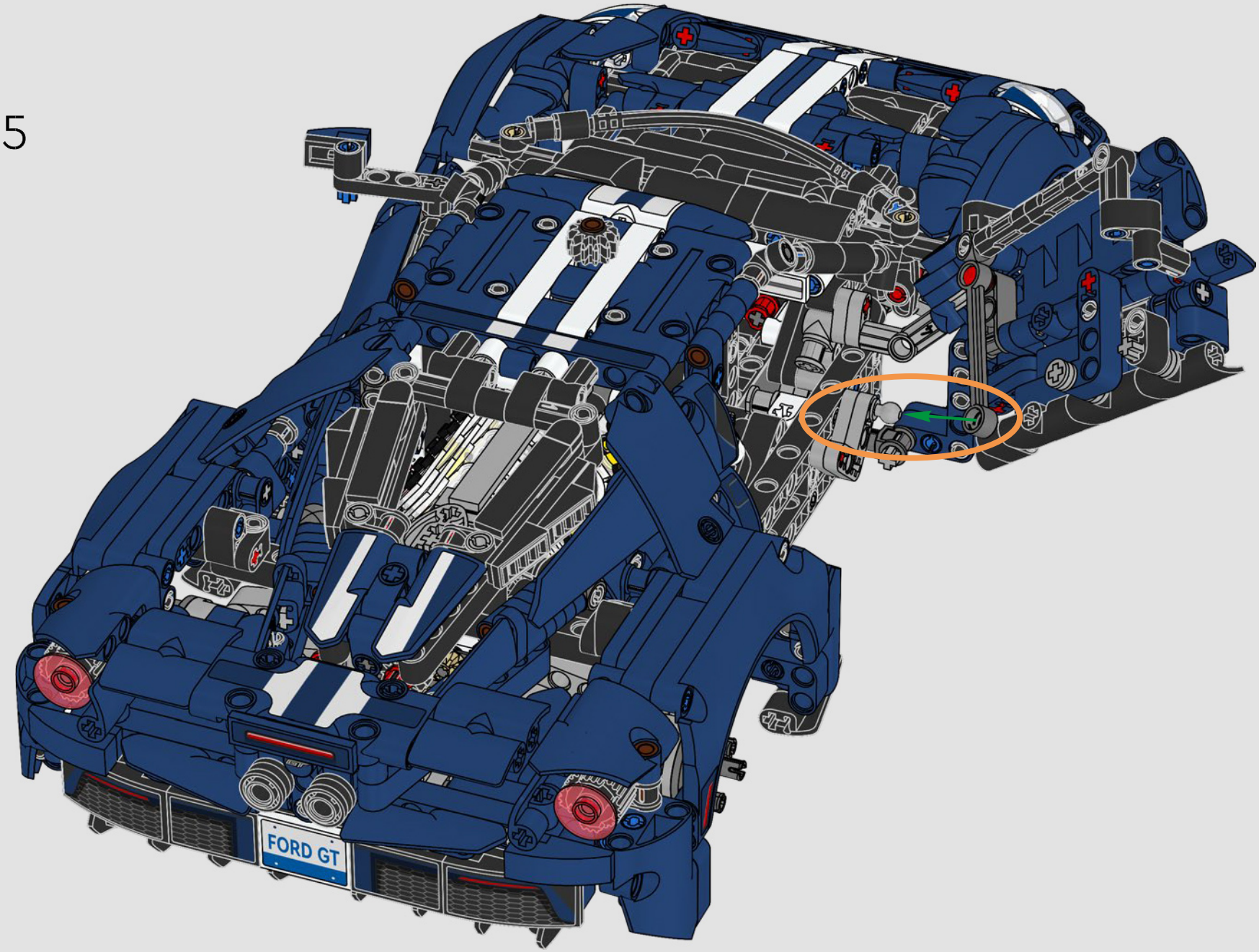

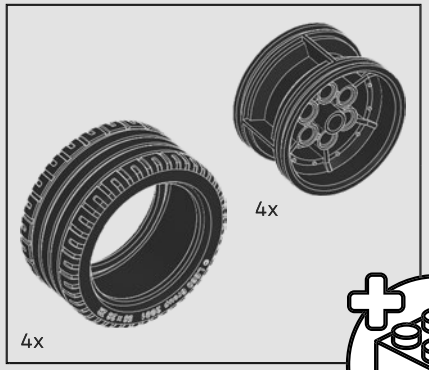

456

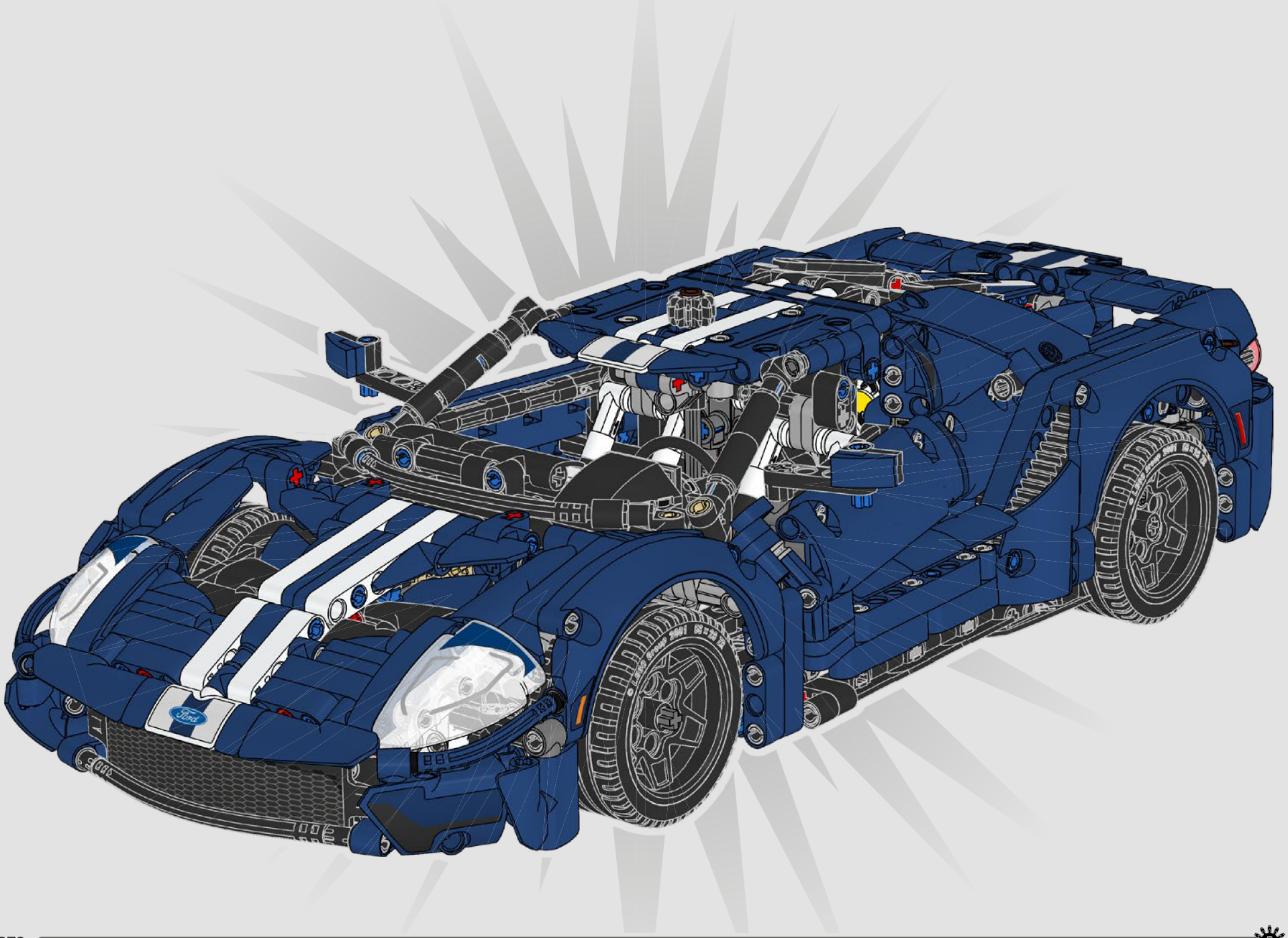

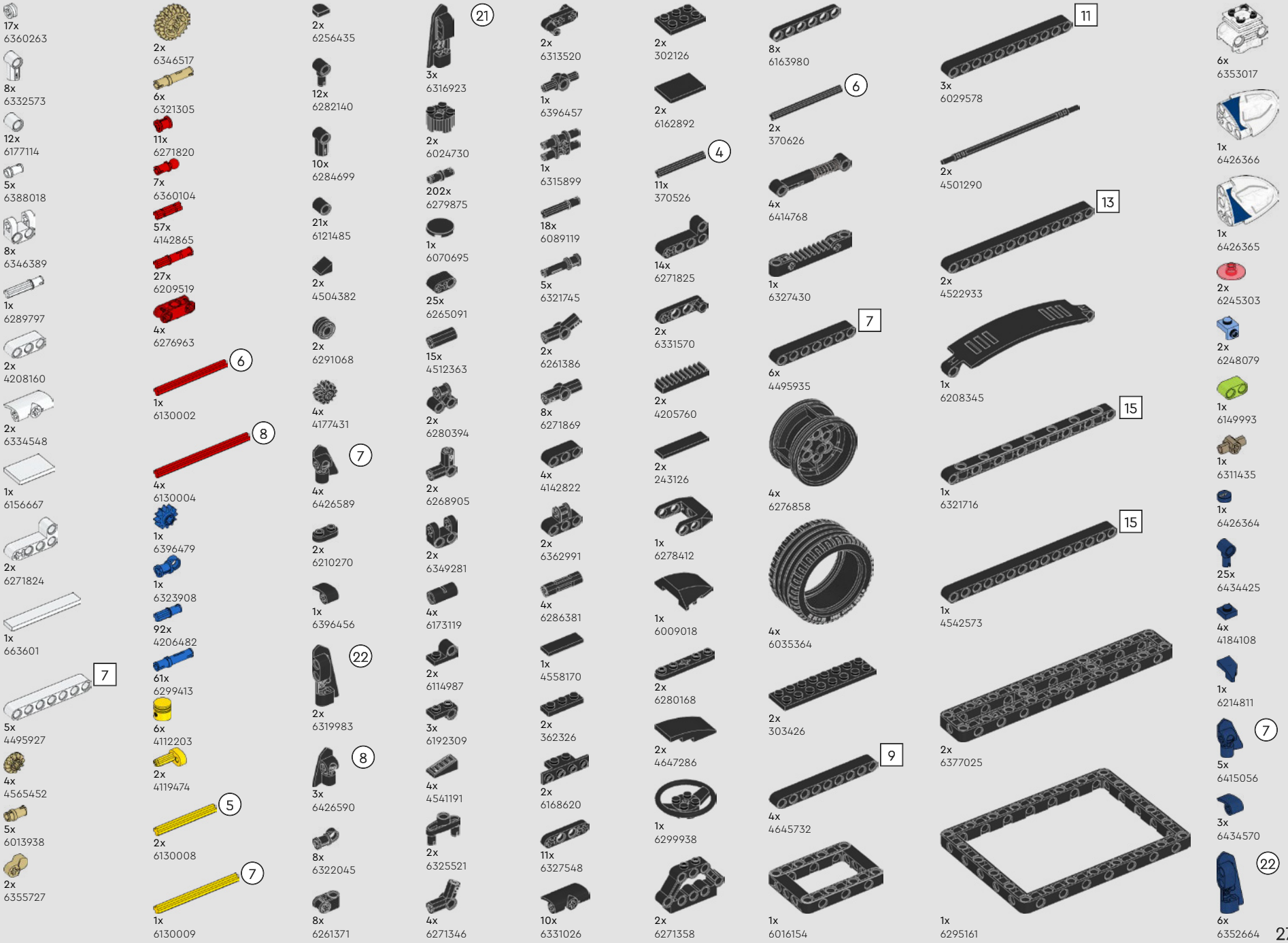
17x 6360263
8x 6332573
12x 6177114
5x 6388018
8x 6346389
1x 6289797
2x 4208160
2x 6334548
1x 6156667
2x 6271824
1x 663601
7
5x 4495927
4x 4565452
5x 6013938
2x 6355727
2x 6346517
6x 6321305
11x 6271820
7x 6360104
57x 4142865
27x 6209519
4x 6276963
6
1x 6130002
8
4x 6130004
1x 6396479
1x 6323908
92x 4206482
61x 6299413
6x 4112203
2x 4119474
5
2x 6130008
7
1x 6130009
2x 6256435
12x 6282140
10x 6284699
21x 6121485
2x 4504382
2x 6291068
4x 4177431
7
4x 6426589
2x 6210270
1x 6396456
22
2x 6319983
8
3x 6426590
8x 6322045
8x 6261371
21
3x 6316923
2x 6024730
202x 6279875
1x 6070695
25x 6265091
15x 4512363
2x 6280394
2x 6268905
2x 6349281
4x 6173119
2x 6114987
3x 6192309
4x 4541191
2x 6325521
4x 6271346
2x 6313520
1x 6396457
1x 6315899
18x 6089119
5x 6321745
2x 6261386
8x 6271869
4x 4142822
2x 6362991
4x 6286381
1x 4558170
2x 362326
2x 6168620
11x 6327548
10x 6331026
2x 302126
2x 6162892
4
11x 370526
14x 6271825
2x 6331570
2x 4205760
2x 243126
1x 6278412
1x 6009018
2x 6280168
2x 4647286
1x 6299938
2x 6271358
8x 6163980
6
2x 370626
4x 6414768
1x 6327430
7
6x 4495935
4x 6276858
4x 6035364
2x 303426
9
4x 4645732
1x 6016154
11
3x 6029578
2x 4501290
13
2x 4522933
1x 6208345
15
1x 6321716
15
1x 4542573
2x 6377025
1x 6295161
6x 6353017
1x 6426366
1x 6426365
2x 6245303
2x 6248079
1x 6149993
1x 6311435
1x 6426364
25x 6434425
4x 4184108
1x 6214811
7
5x 6415056
3x 6434570
22
6x 6352664

7
5x
6432397
8
2x
4499858
9
1x
4645730
15
2x
4542576
1x
6384681
6x
6273715
4x
6167281
4x
4552349
2x
4610378
4
18x
6083620
1x
4525184
2x
6370946
5
3x
4210686
5,5
1x
4508553
4x
4629920
22x
6437884
8
5x
6415057
1x
6214812
21
6x
6352645
22x
6434414
10x
6437883
24x
6344867
6x
6434562
2x
6094143
4x
6434422
8x
6434411
4x
6434417
8x
6434419
1x
6317655
2x
4540280
14x
6434563
2
4x
6174851
1
4x
6174850
6
1x
6218005
5
1x
6218007
9x
6271839
1x
6103985
6x
6434424
2x
6434566
6x
6217683
5
6x
6420960
2x
6225776
7
2x
6217673
60
1x
6434568
61
1x
6434567
2x
6434559
2x
6279908
3x
6434565
9
3x
6434420
43
2x
6437973
32
2x
6437967
2x
6411452
15
2x
6151070
10x
6271165
1x
4211399
6x
4211375
12x
6123815
4x
6280396
8x
6348143
2x
4211807
2x
6173127
2x
6066097
1x
6004990
6x
6000018
2x
4667578
9x
6360043
2x
6169984
1x
6345502
4x
6271815
2x
6262905
3x
6279023
3x
4211397
3
47x
4211815
1x
6338962
27x
6321747
5x
6276969
8x
6331441
1x
6408168
5x
6273212
2x
6408171
4x
6331428
4x
6247352
5
2x
4211639
5
9x
4211651
1x
6055519
2x
4211713
7
2x
4211805
1x
4211481
1x
4540797
3
6x
6135494
5
7x
6159763
29x
6395635
1x
4210639
4x
6005331
10x
6375679
2x
4610374
3x
6215212
1x
4211111
2x
6359227
LEGO.com/service

YOU COULD WIN

YOU COULD
WIN

Your feedback will help shape the future development of this product series.

Visit:

DU KÖNNTEST
GEWINNEN

Dein Feedback trägt zur Weiterentwicklung dieser Produktreihe bei.

Geh auf:

VOUS POURRIEZ
GAGNER

Vos commentaires nous aideront à concevoir les futurs produits de cette gamme.

Visitez :

POTRESTI
VINCERE TU

La tua opinione ci aiuterà a migliorare la creazione futura di questa linea di prodotti.

Visita:

PUEDES
GANAR

Tu opinión contribuirá al futuro de esta serie de productos.

Visita:

轻松获奖

您的反馈将有助于我们在今后改进本产品系列。

请访问：

LEGO.com/productfeedback

You also have the chance to win a LEGO® set.

Terms and conditions apply.*

Außerdem hast du die Chance, ein LEGO® Set zu gewinnen.

Es gelten die Teilnahmebedingungen.*

Vous pourriez également gagner un ensemble LEGO®.

Des conditions s'appliquent.*

Hai anche la possibilità di vincere un set LEGO®.

Termini e condizioni sono applicabili.*

También tienes la oportunidad de ganar un set LEGO®.

Aplican términos y condiciones.*

您还有机会赢取乐高®套装。

条款和条件适用。*

**LEGO.com/productfeedback-terms*

LEGO and the LEGO logo are trademarks of the LEGO Group. ©2023 The LEGO Group.
Ford Motor Company Trademarks and Trade Dress used under license to the LEGO Group.

Official Licensed Product

6456540