LEGO TECHNIC™

42153

LEGO.com/sustainable-packaging

BUILDER

Download on the App Store | GET IT ON Google Play | 腾讯应用宝 安卓应用商店

Apple and the Apple logo are trademarks of Apple Inc., registered in the U.S. and other countries and regions. App Store is a service mark of Apple Inc. Google Play and the Google Play logo are trademarks of Google LLC. Tencent and the Tencent logo are trademarks of Tencent Inc.

LEGO.com/devicecheck

EN Ask parents' permission before going online I **DE** Eltern um Erlaubnis bitten, bevor du online gehst I **FR** Demande l'autorisation d'un parent avant d'aller en ligne I **IT** Chiedi il permesso ai tuoi genitori prima di andare online I **ES** Pídeles permiso a tus papás antes de conectarte a Internet I **PT** Pede autorização aos pais antes de acederes online I **JA** オンラインになる前に ほご者の方のきょかをもらおう I **ZH** 上网前应先征得父母的同意 I **KO** 온라인 접속 전에 보호자 동의가 필요합니다 I **RU** Спроси разрешения у родителей, прежде чем заходить в интернет I **PL** Poproś rodziców o zgodę, zanim wejdziesz do Internetu I **CS** Než půjdeš na internet, požádej rodiče o svolení I **SK** Skôr než pôjdeš na internet, vypýtaj si povolenie od rodičov I **HU** Kérj szülői engedélyt, mielőtt online csatlakoznál! I **RO** Cere permisiunea părinților înainte de a te conecta online I **BG** Поискайте разрешение от родител, преди да влезете онлайн I **LV** Pirms došanās tiešsaistē palūdz atļauju vecākiem I **ET** Enne Interneti kasutamist küsi vanematelt luba I **LT** Prieš prisijungdami prie interneto, atsiklauskite tėvų

1

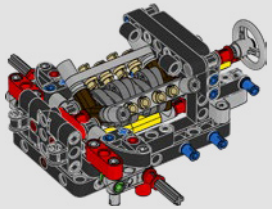

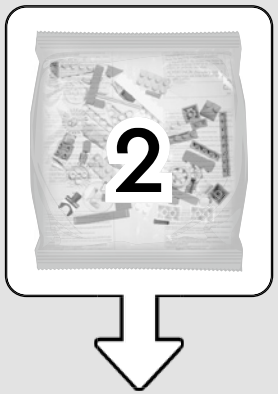
2

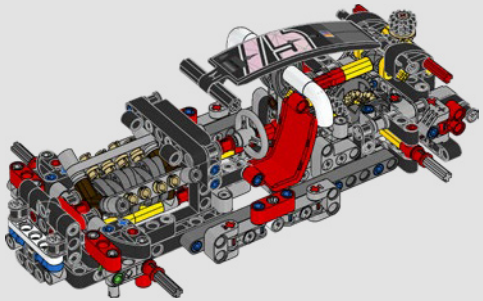

3

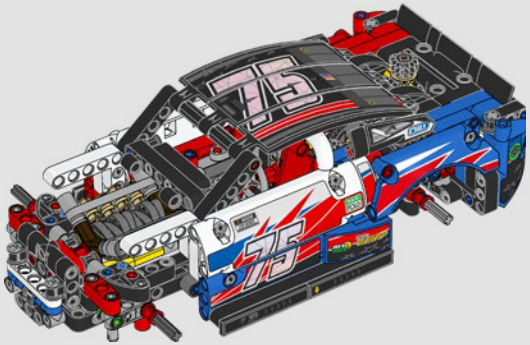

4

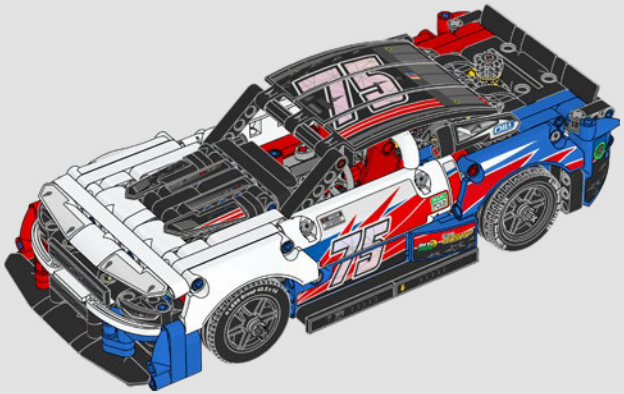

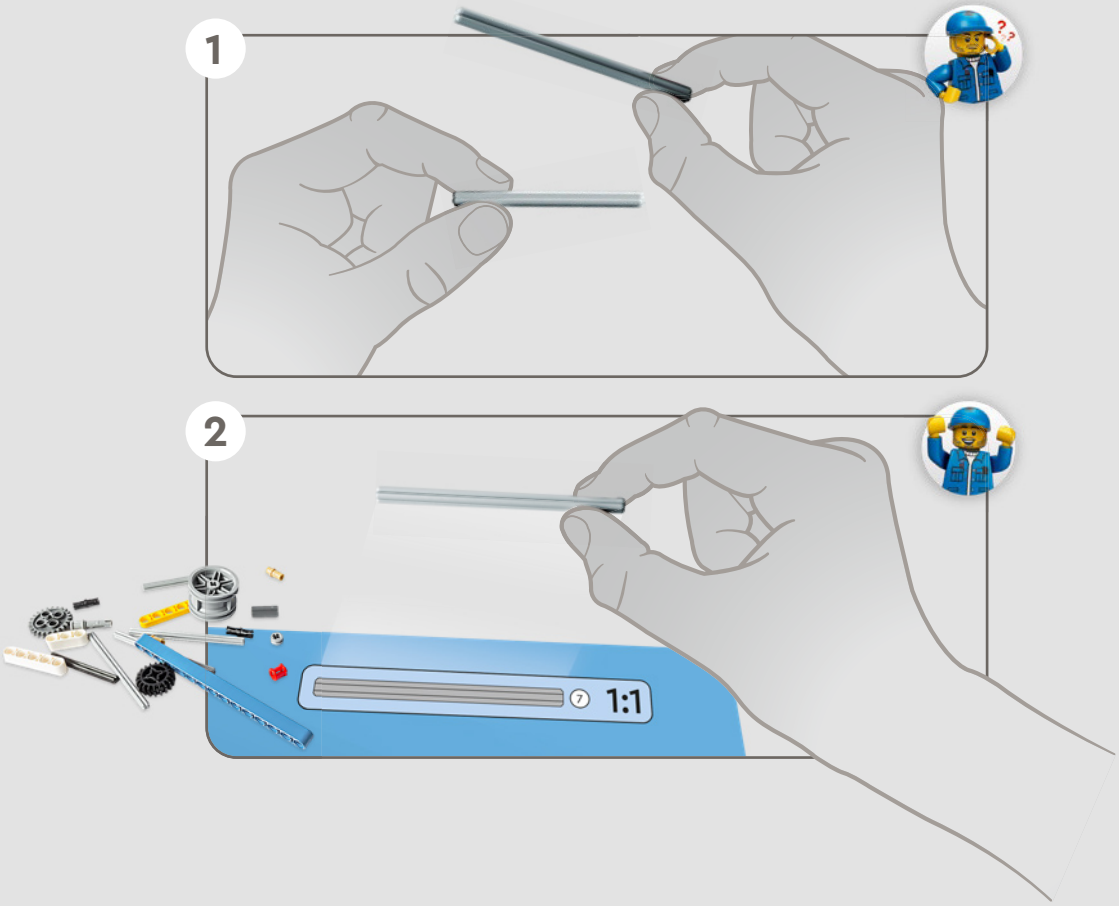
1
2
1:1

1

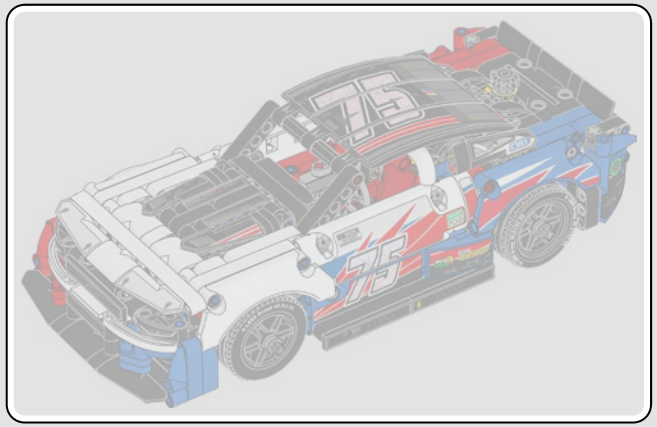

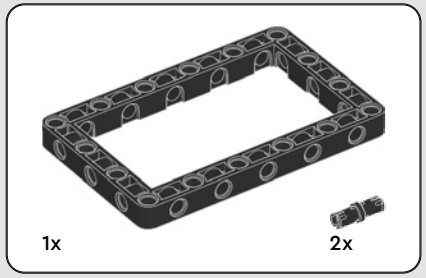

1

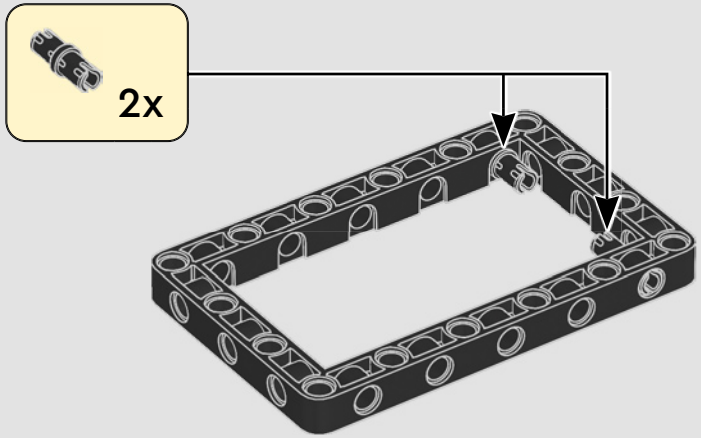

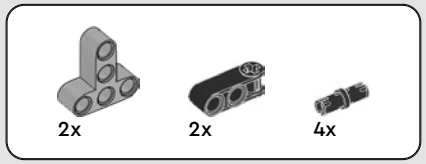

2

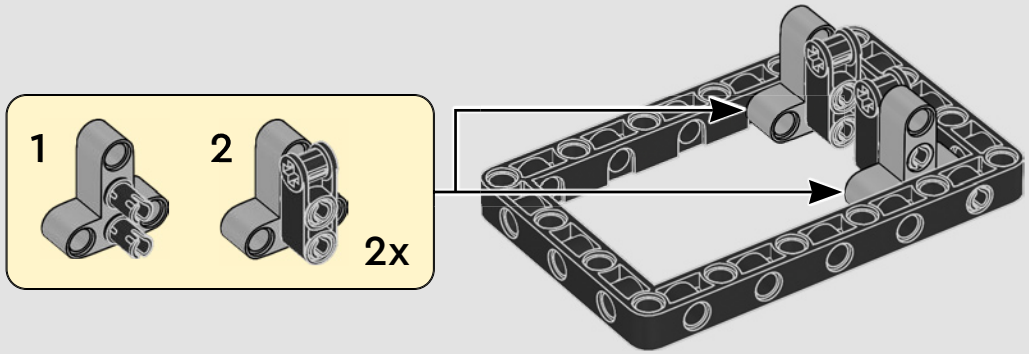

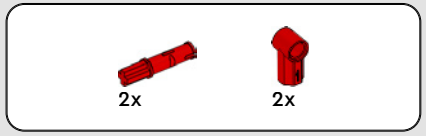

3

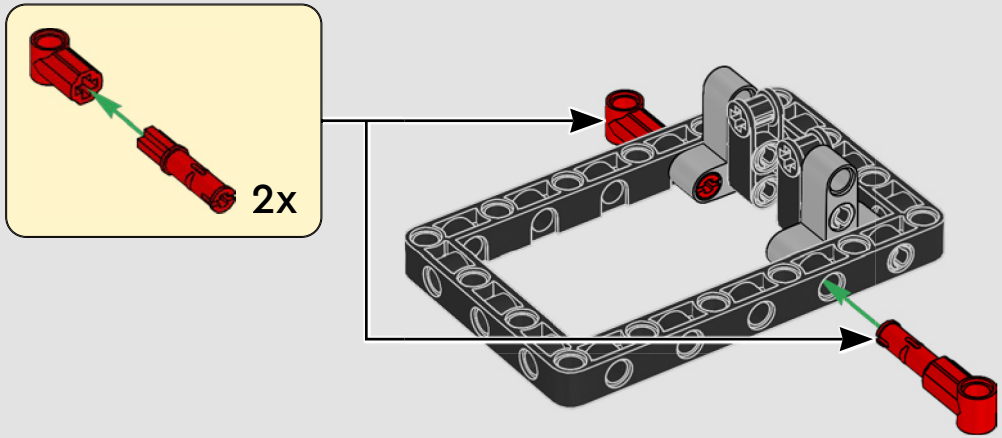

2x

4

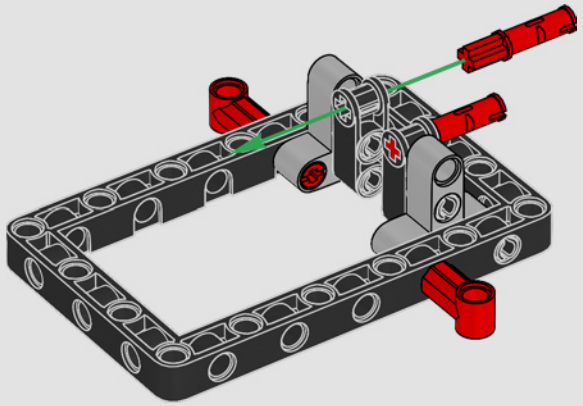

5 1:1

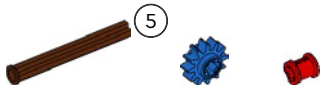

5

1x 1x 1x

5

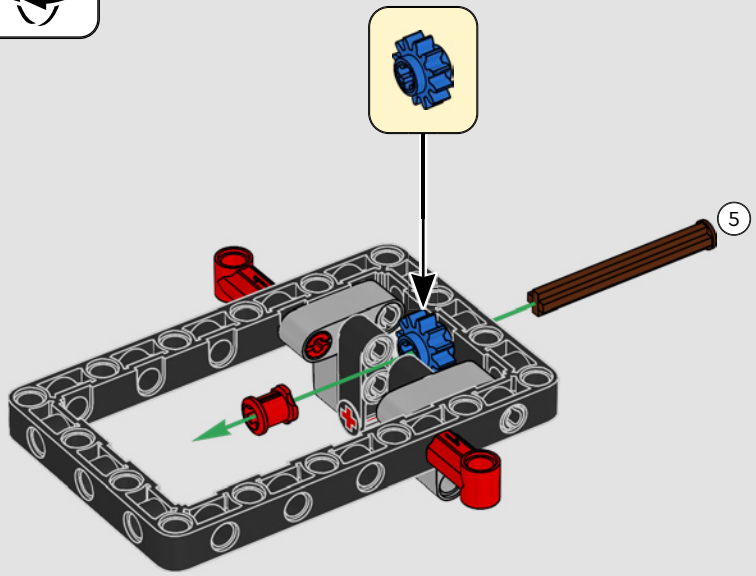

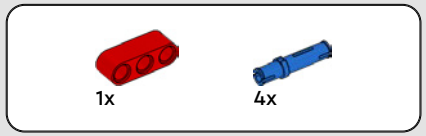

6

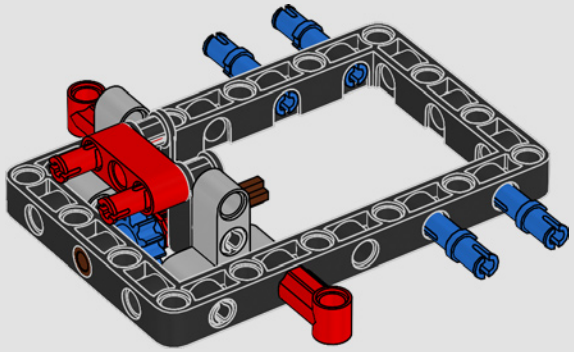

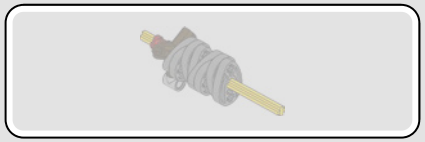

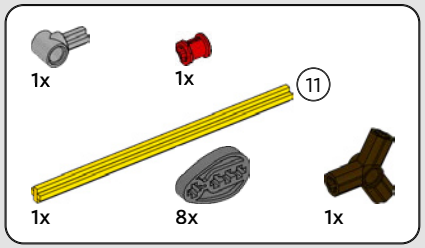

7

1

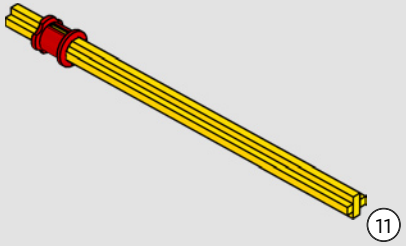

2

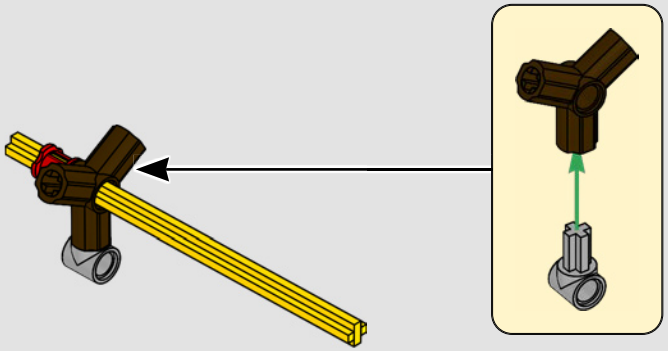

3

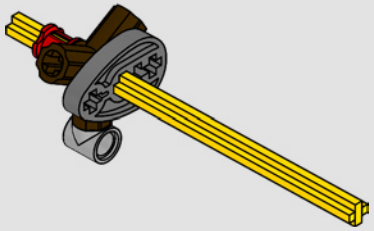

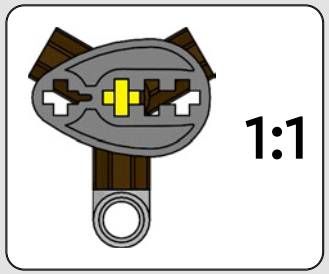

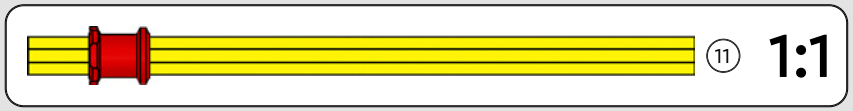

4

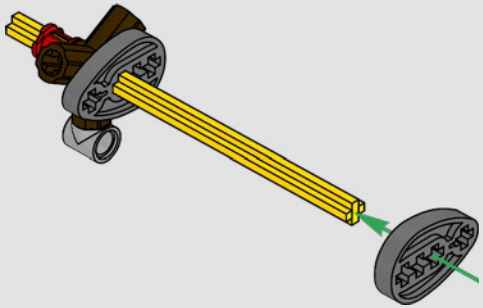

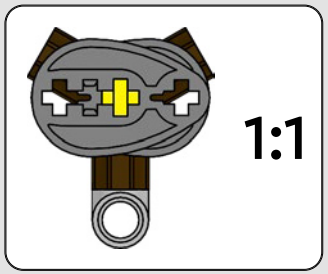

5

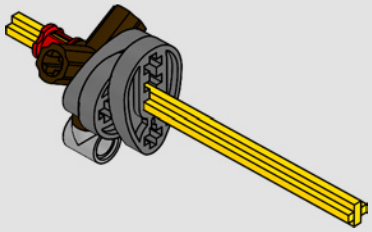

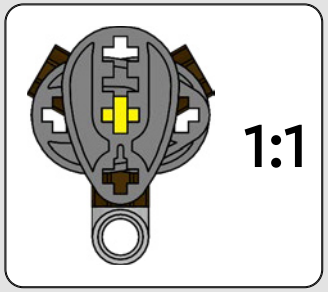

6

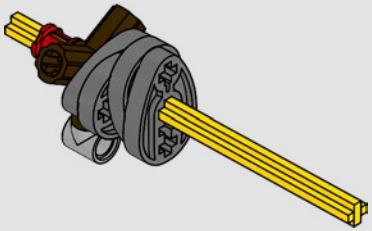

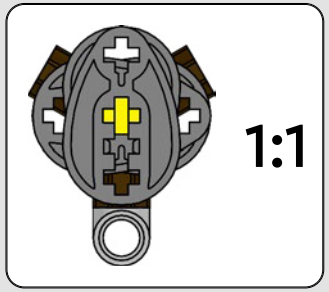

7

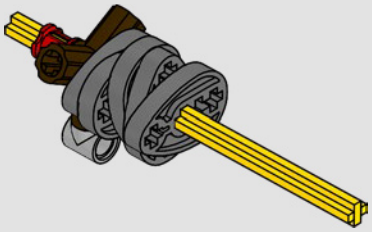

8

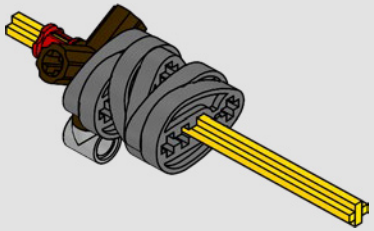

9

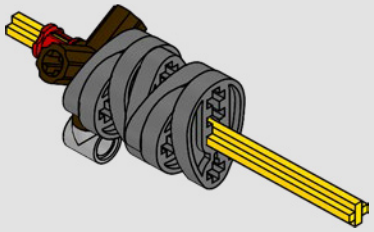

10

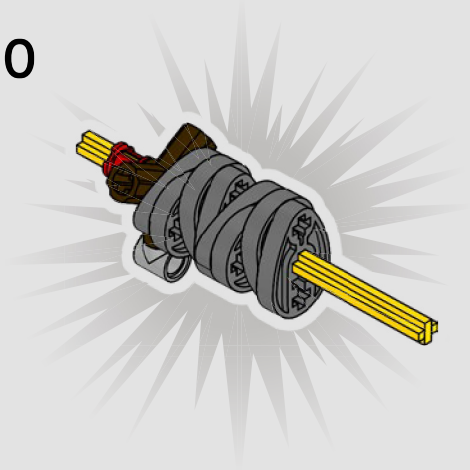

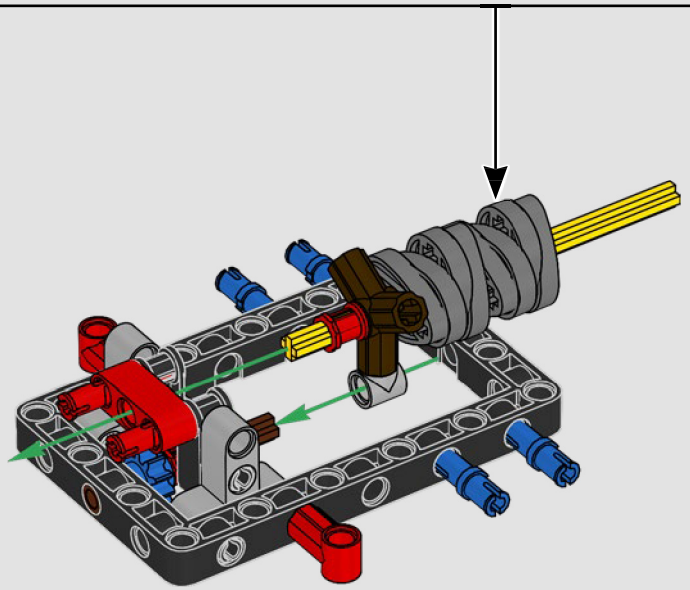

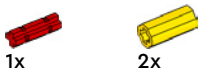

8

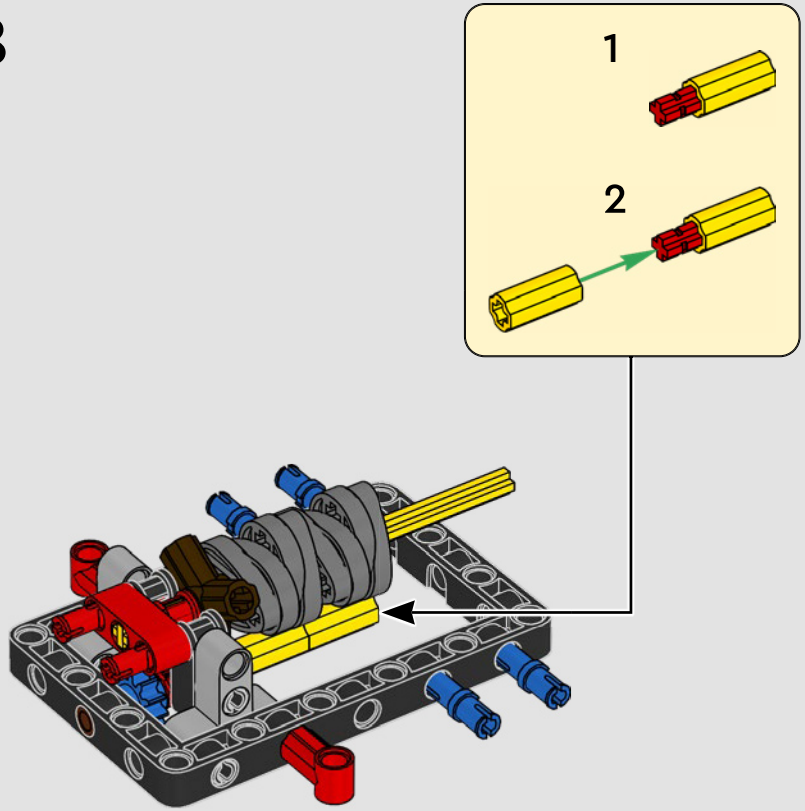

9

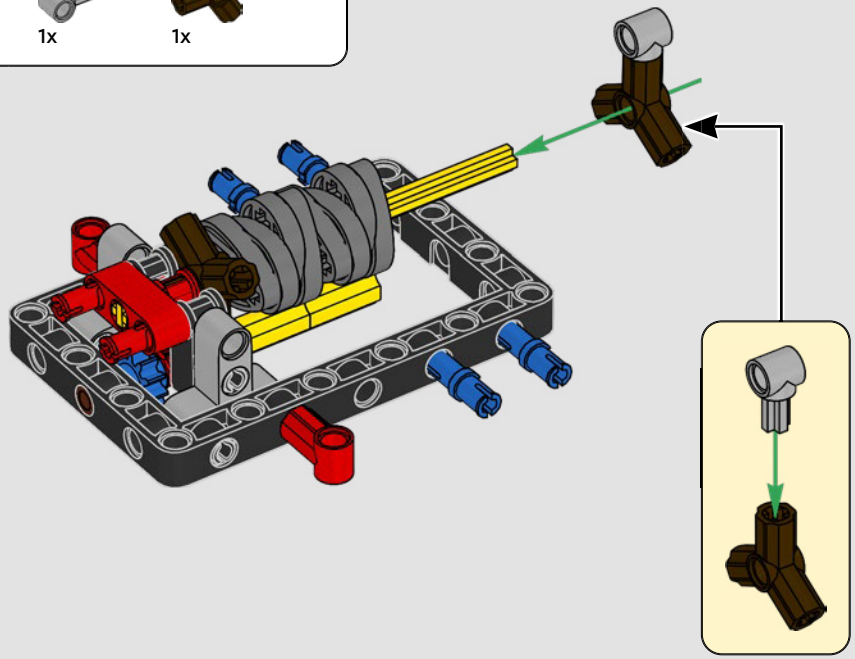

10

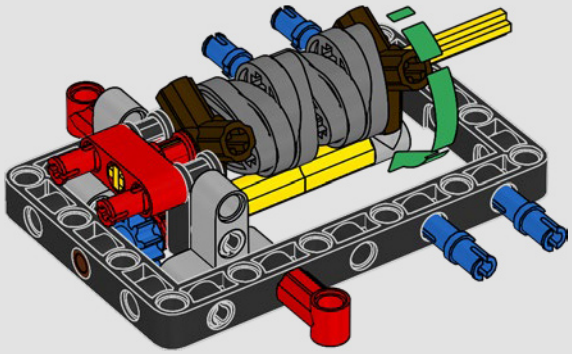

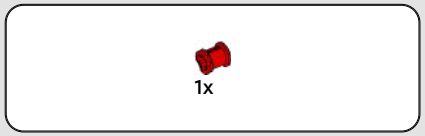

11

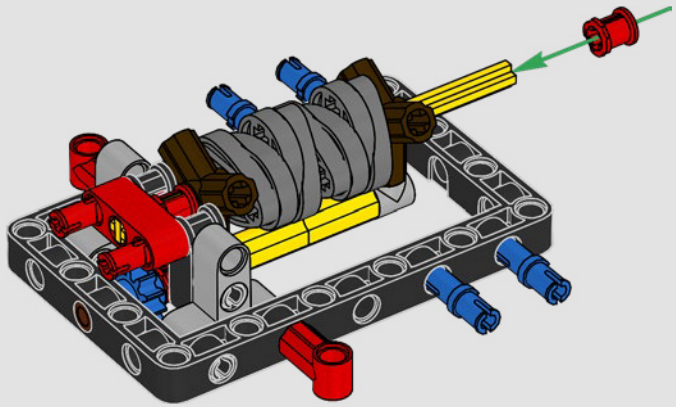

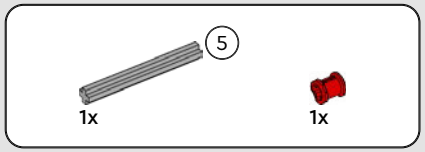

12

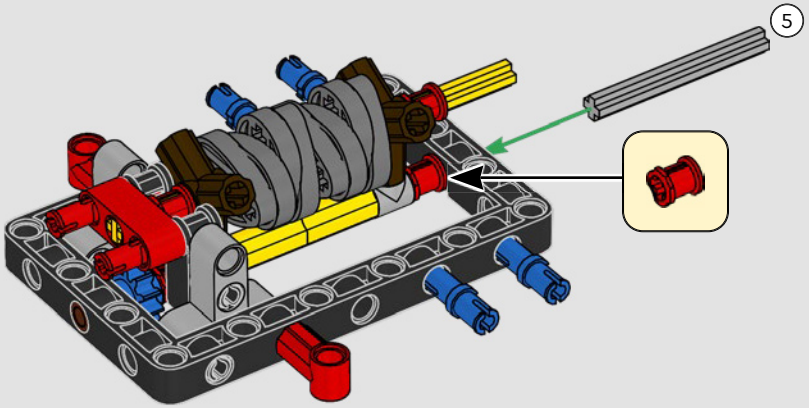

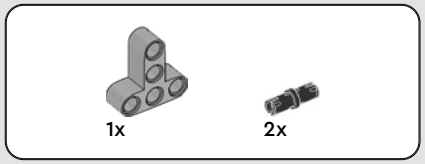

13

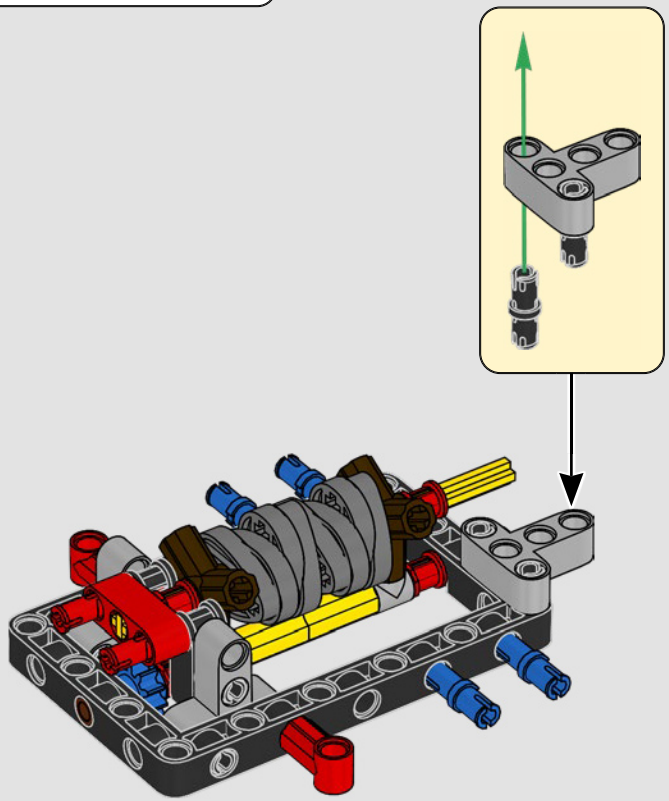

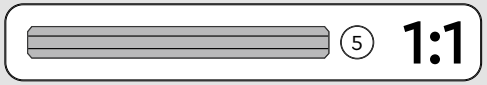

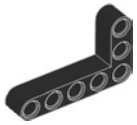

2x

14

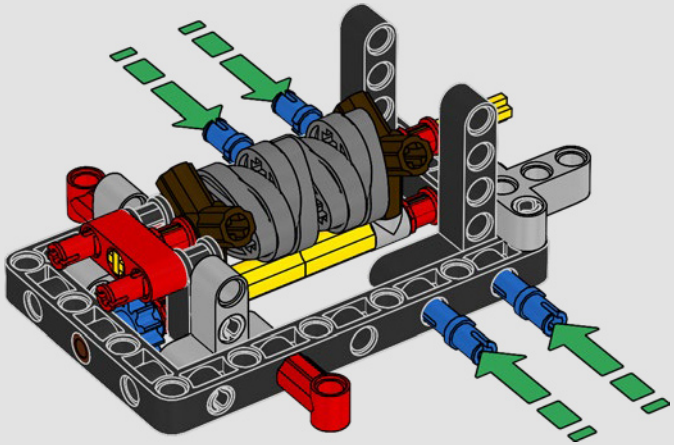

4x

15

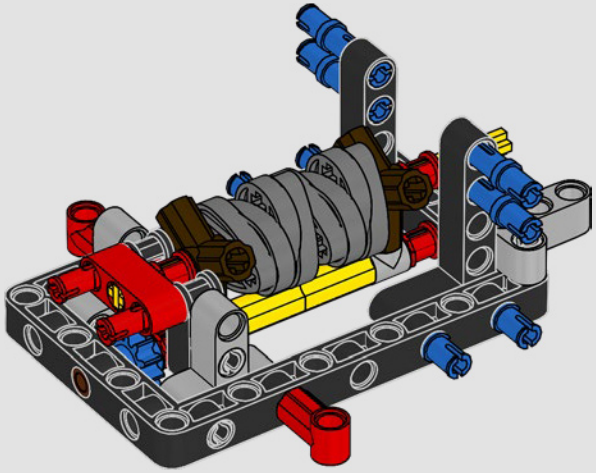

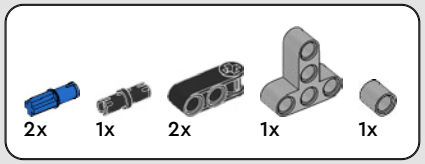

16

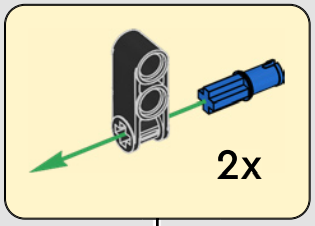

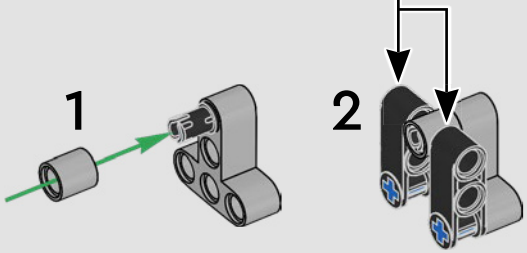

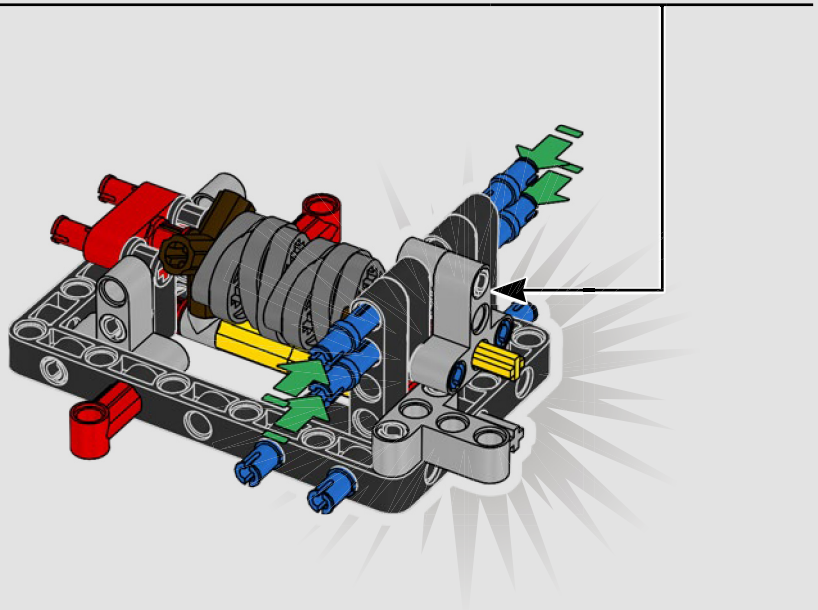

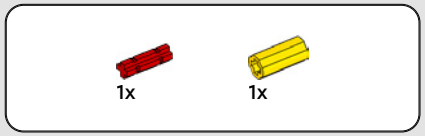

17

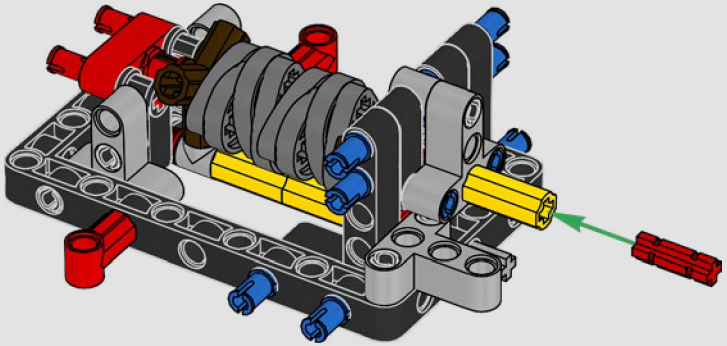

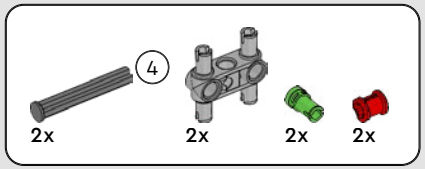

18

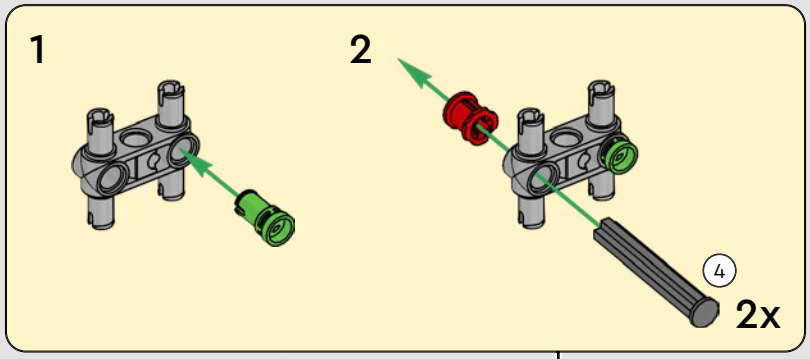

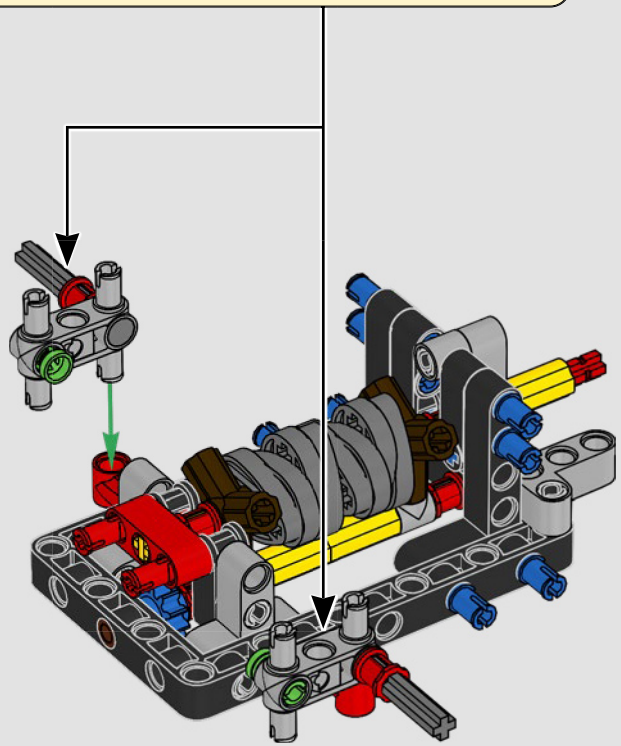

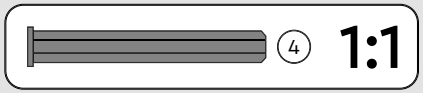

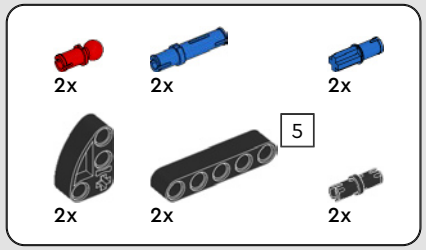

19

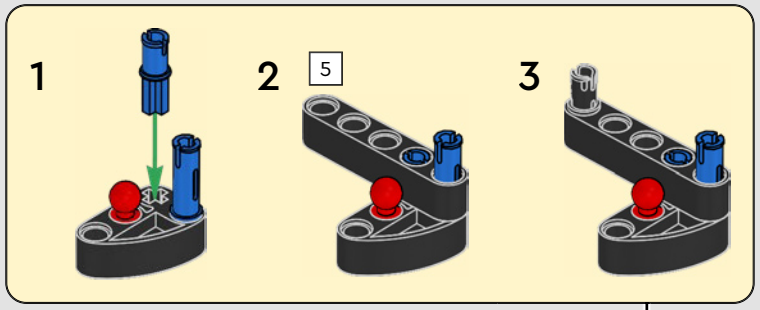

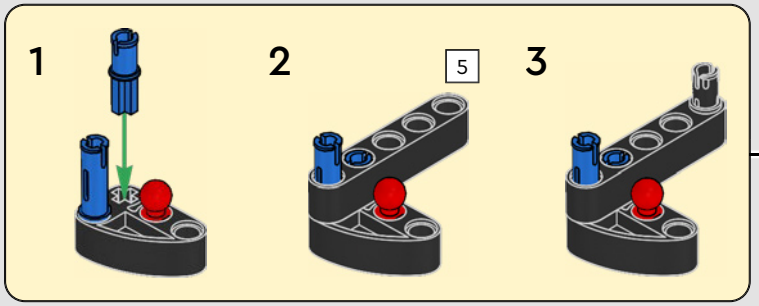

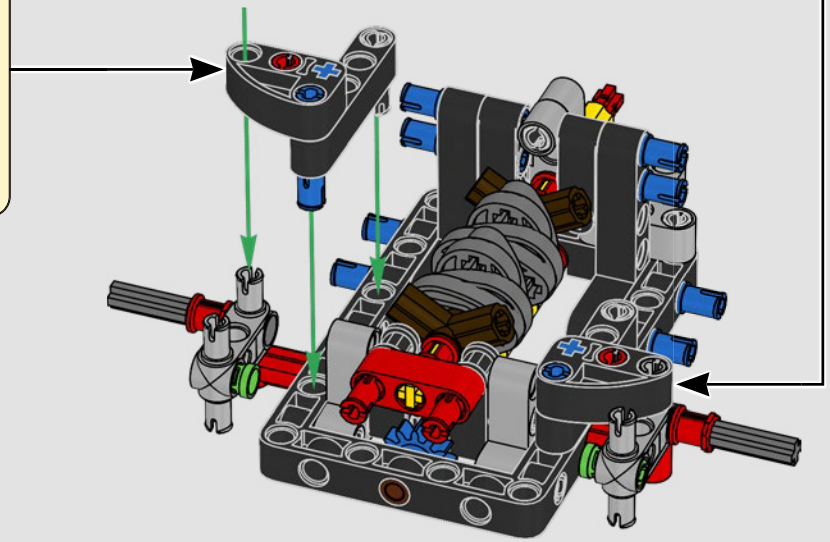

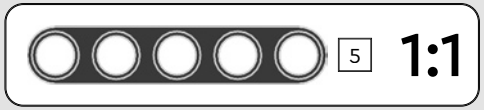

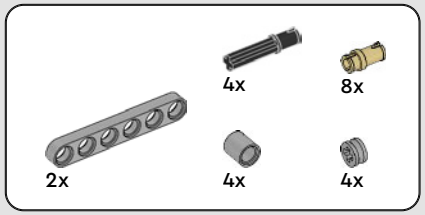

20

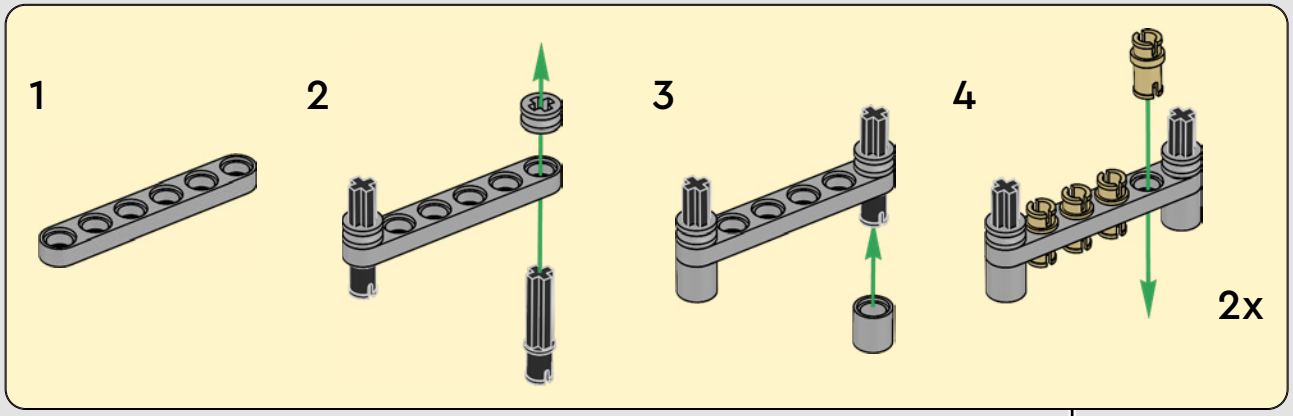

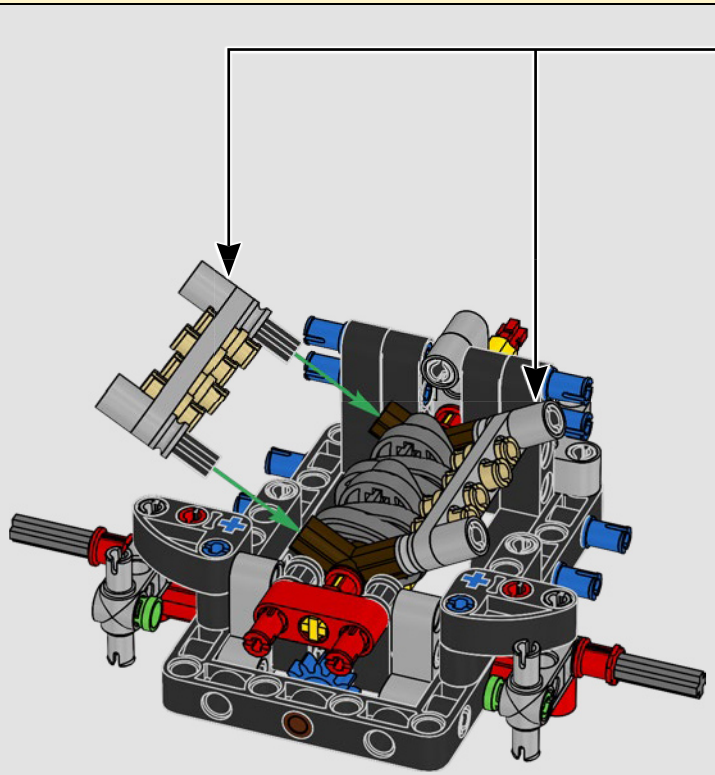

21

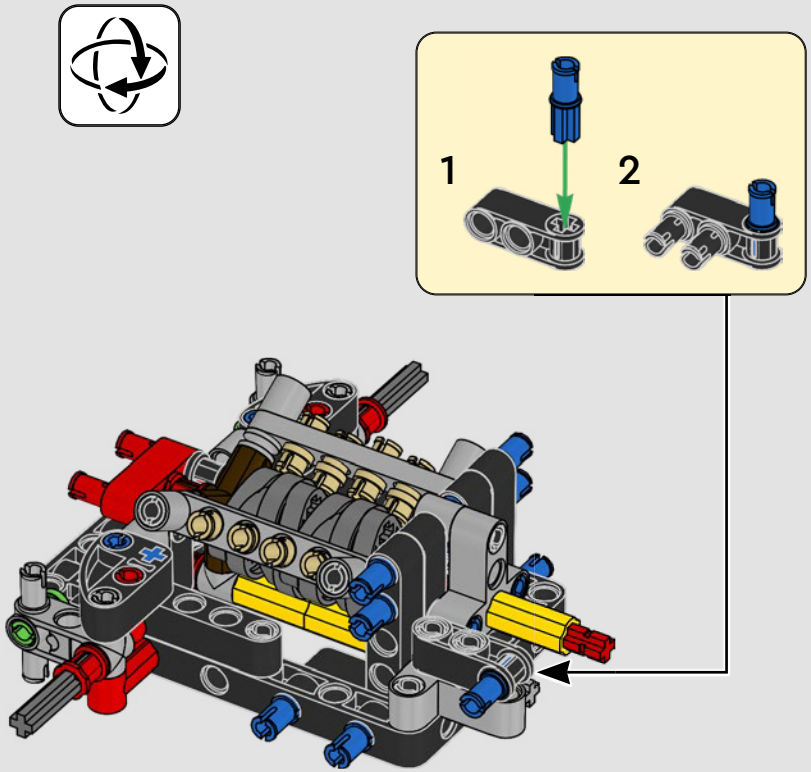

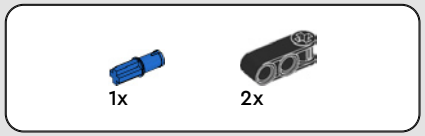

22

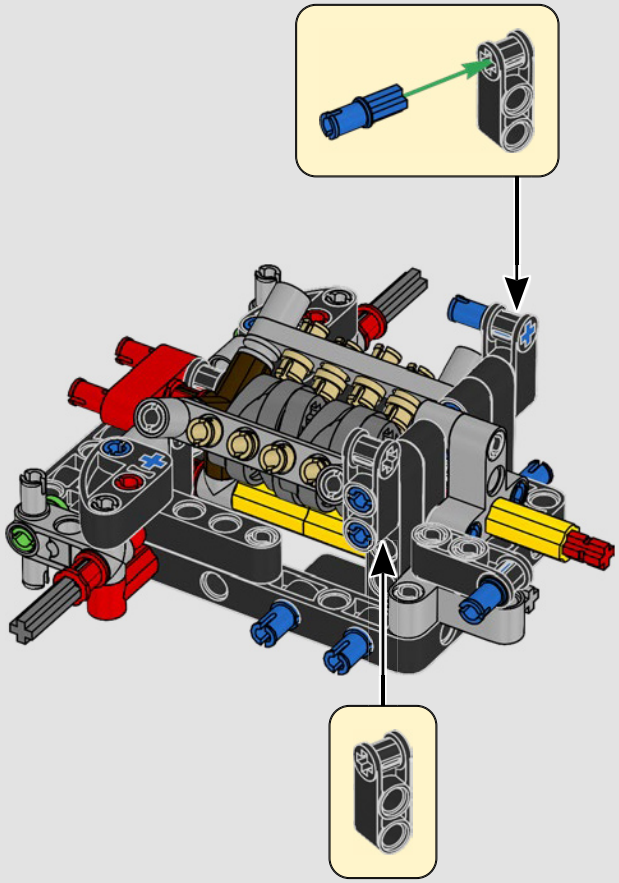

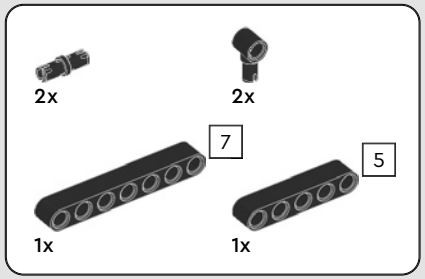

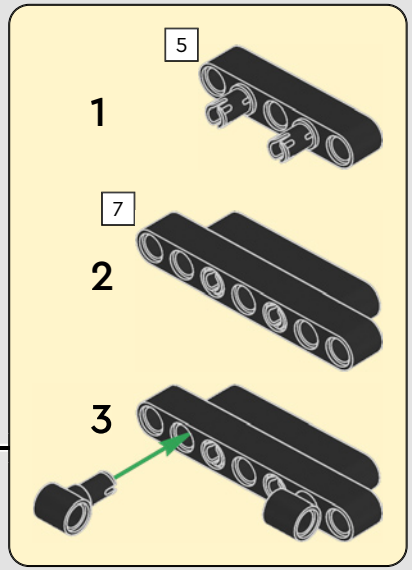

23

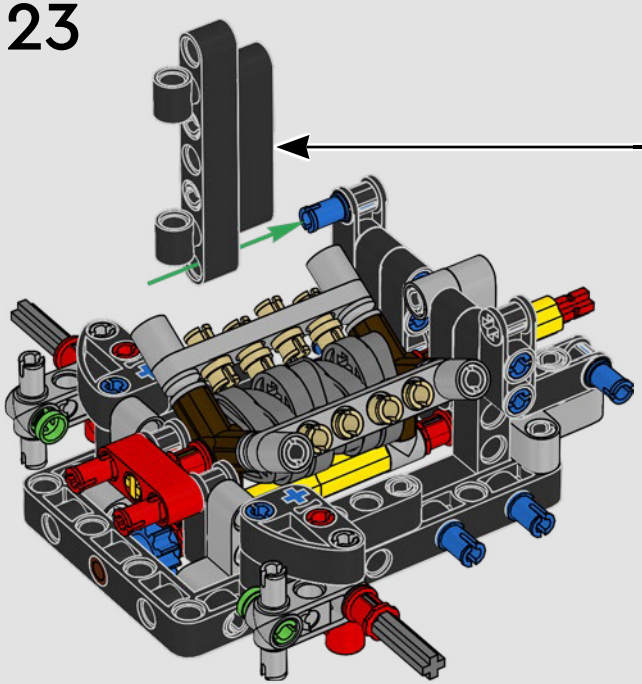

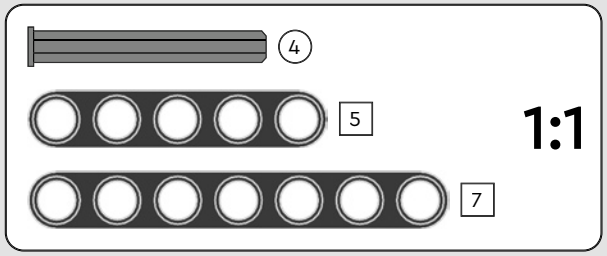

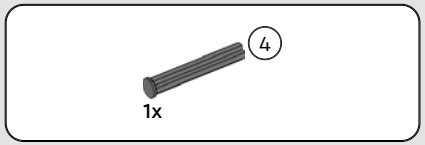

24

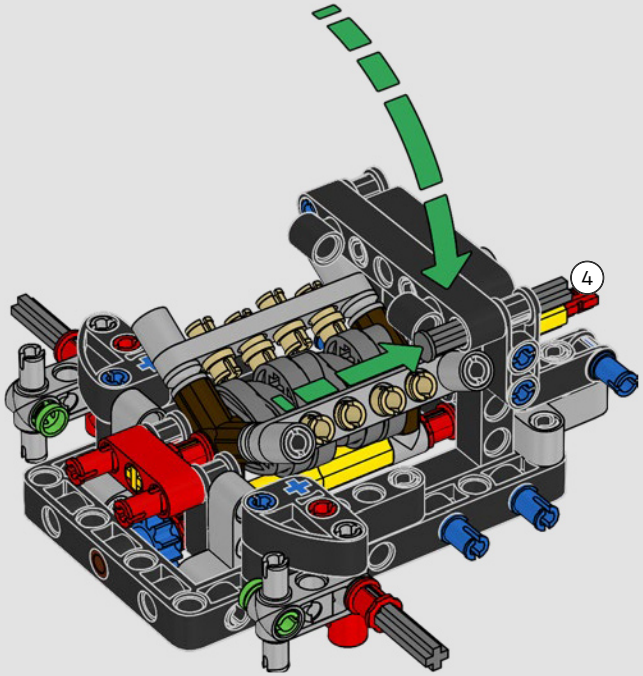

25

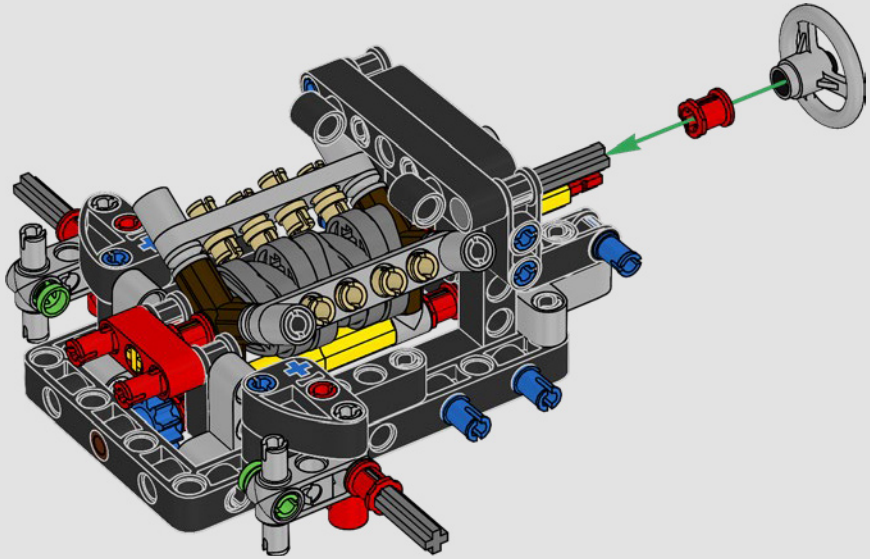

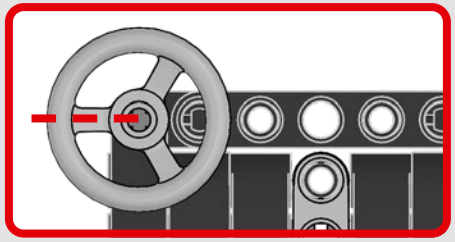

26

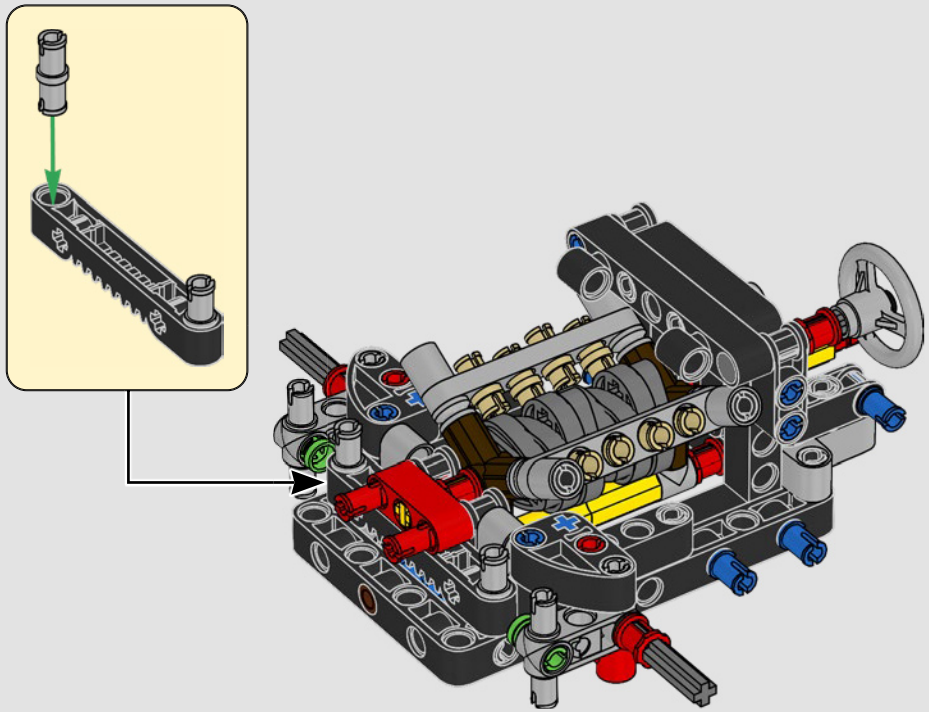

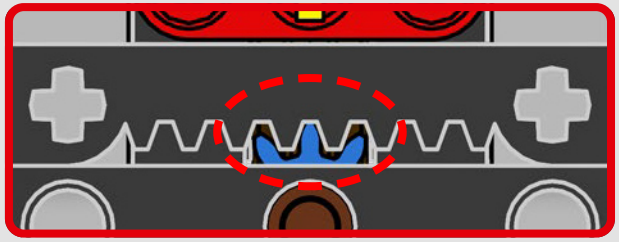

27

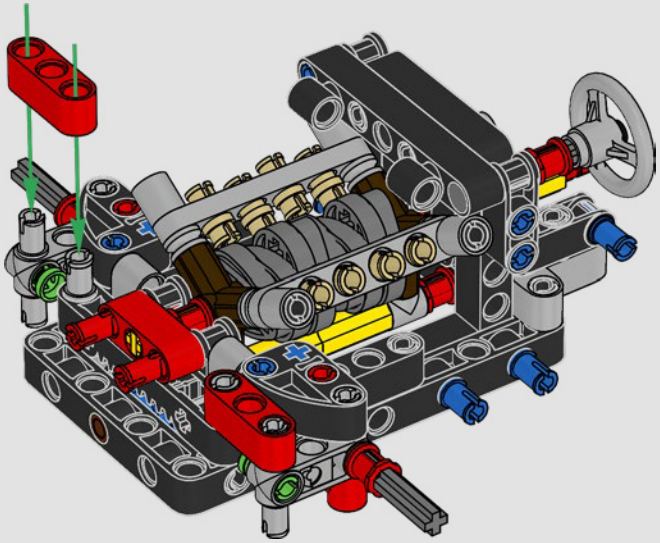

28

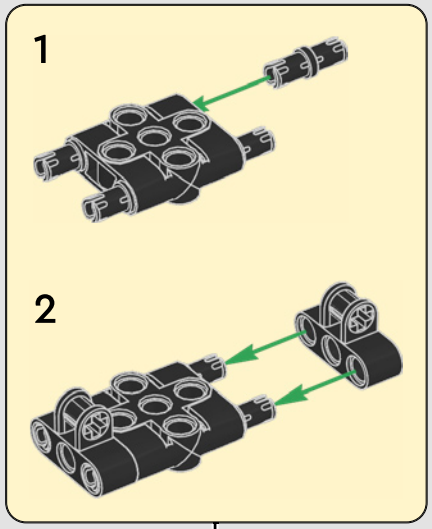

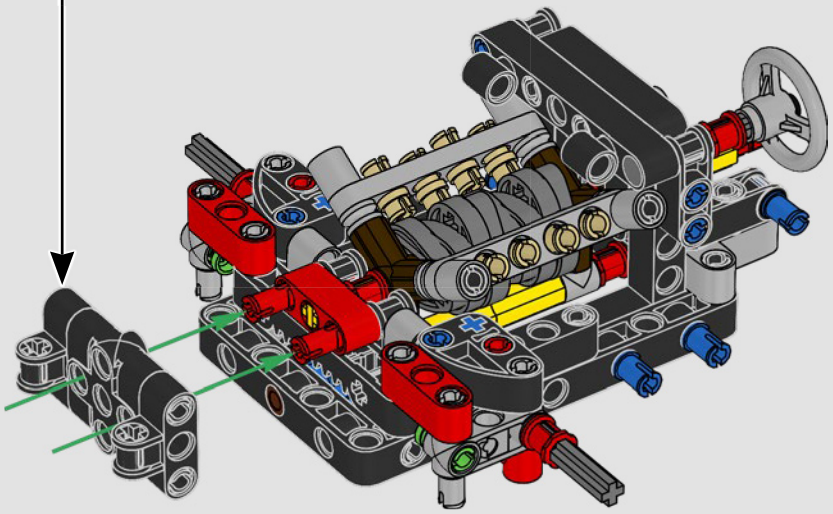

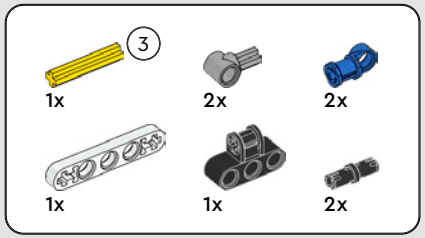

29

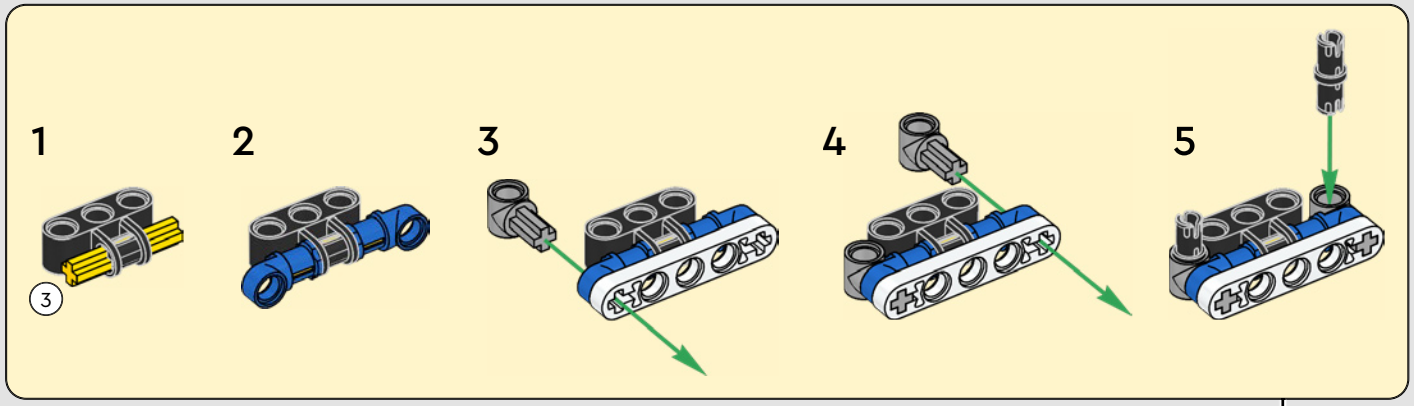

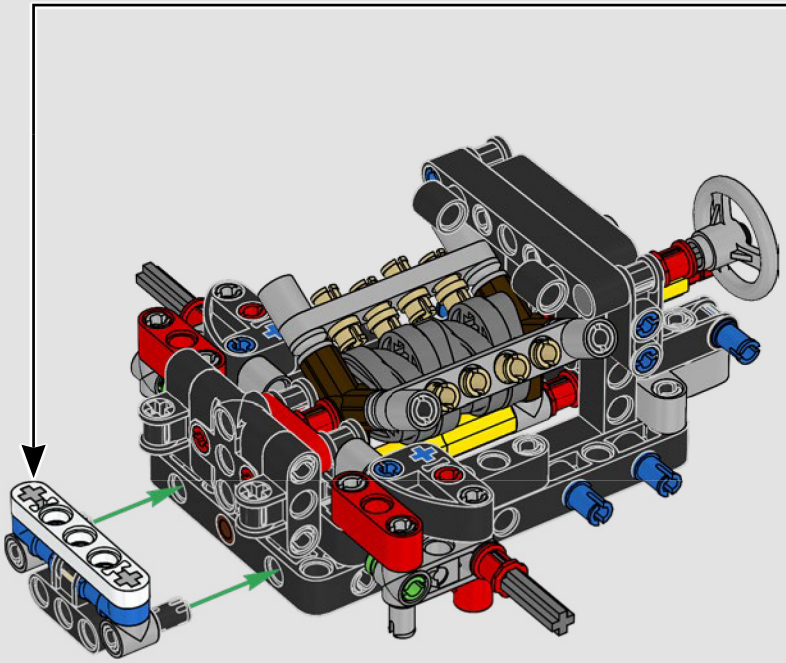

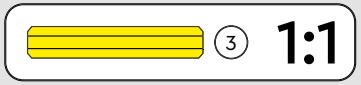

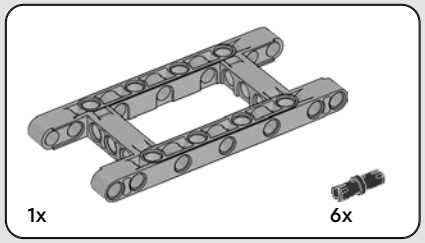

30

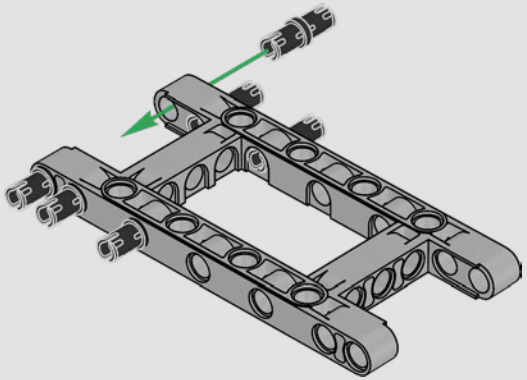

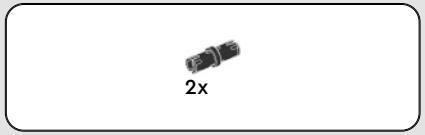

31

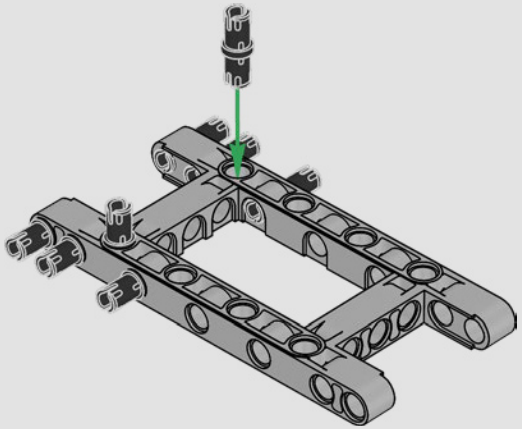

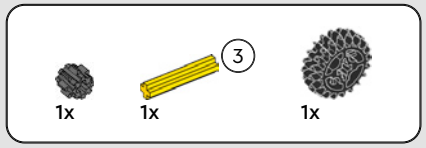

32

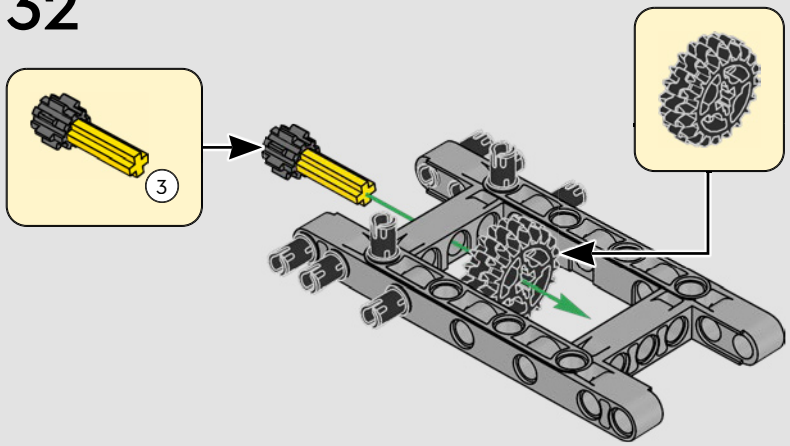

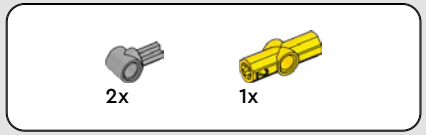

33

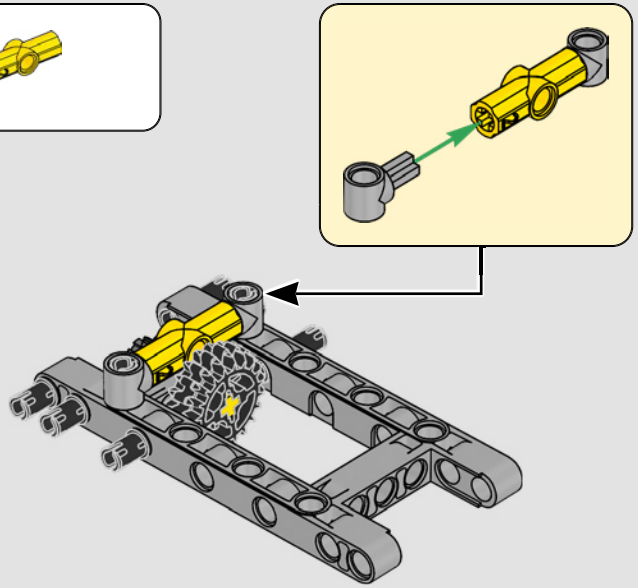

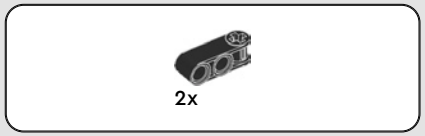

34

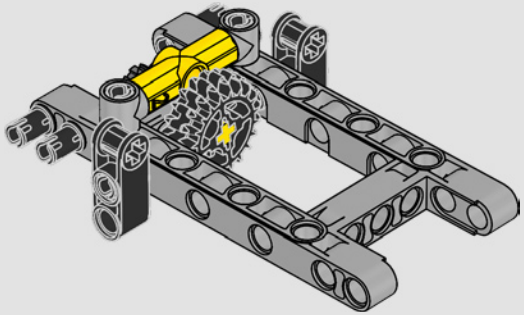

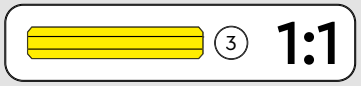

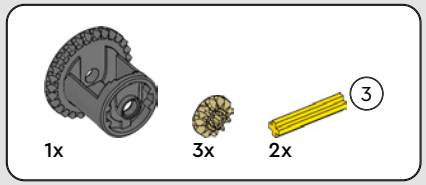

35

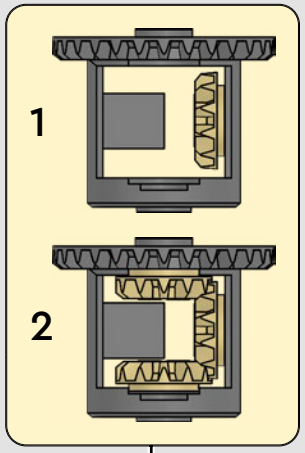

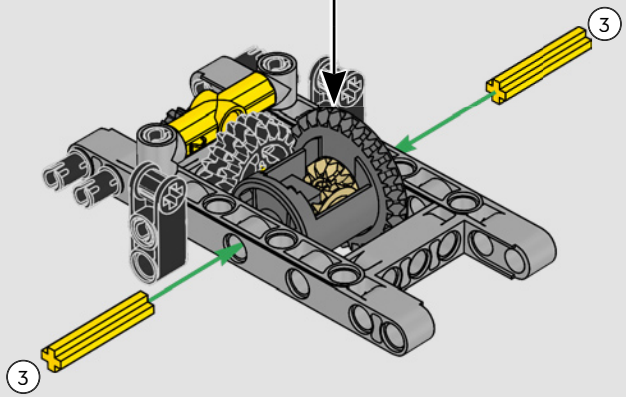

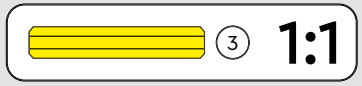

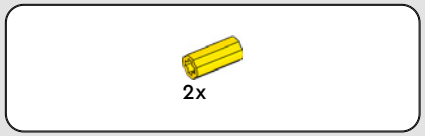

36

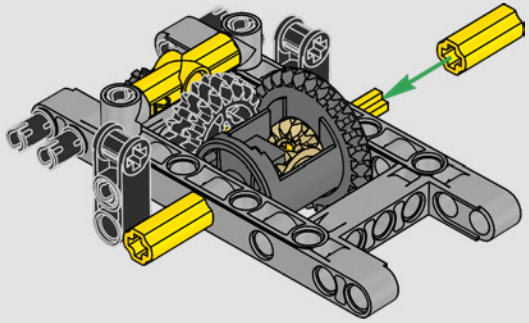

37

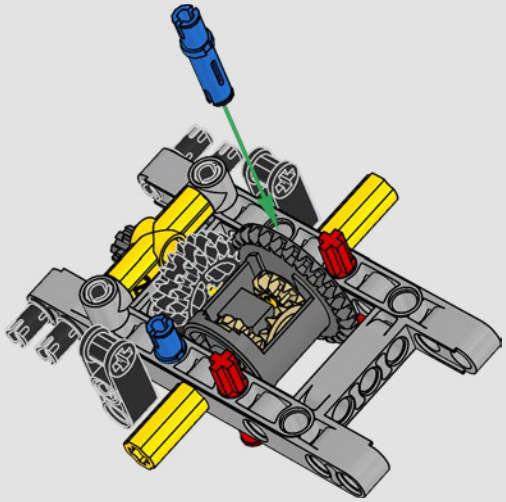

38

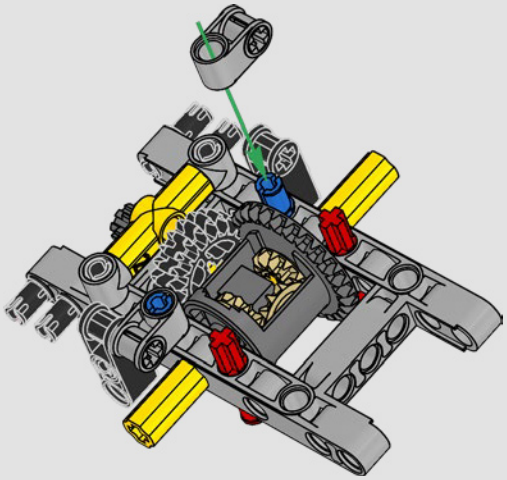

2x

39

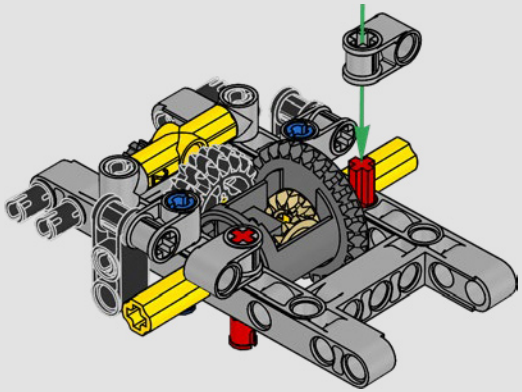

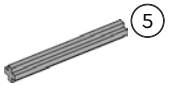

2x

40

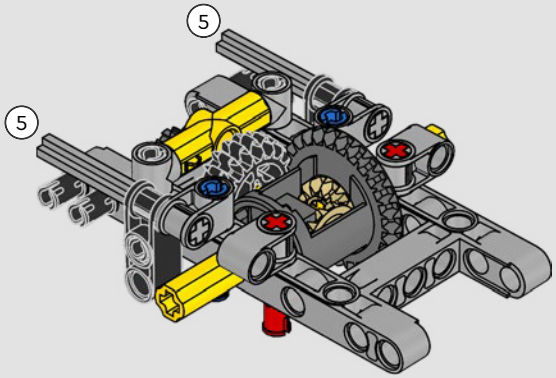

5 1:1

2x

41

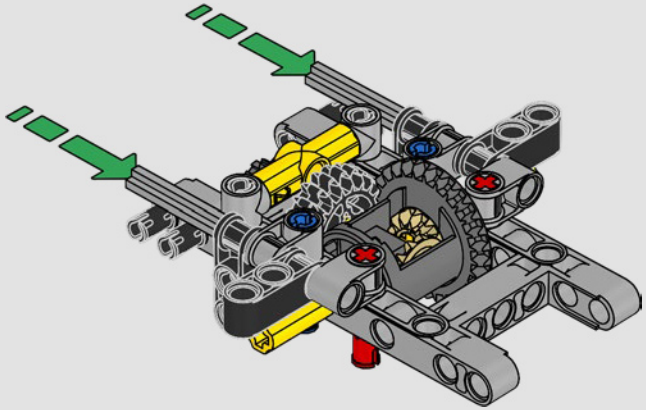

2x

42

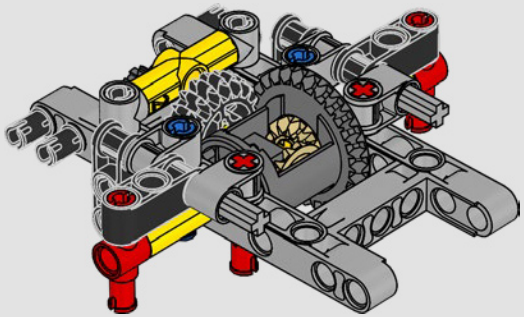

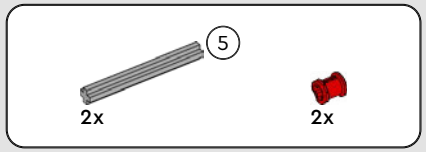

43

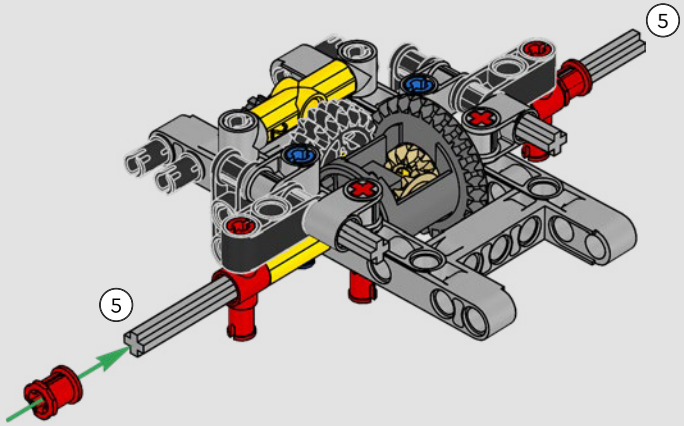

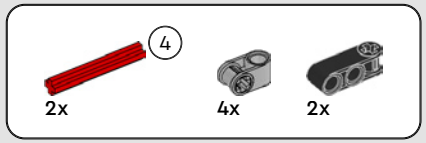

44

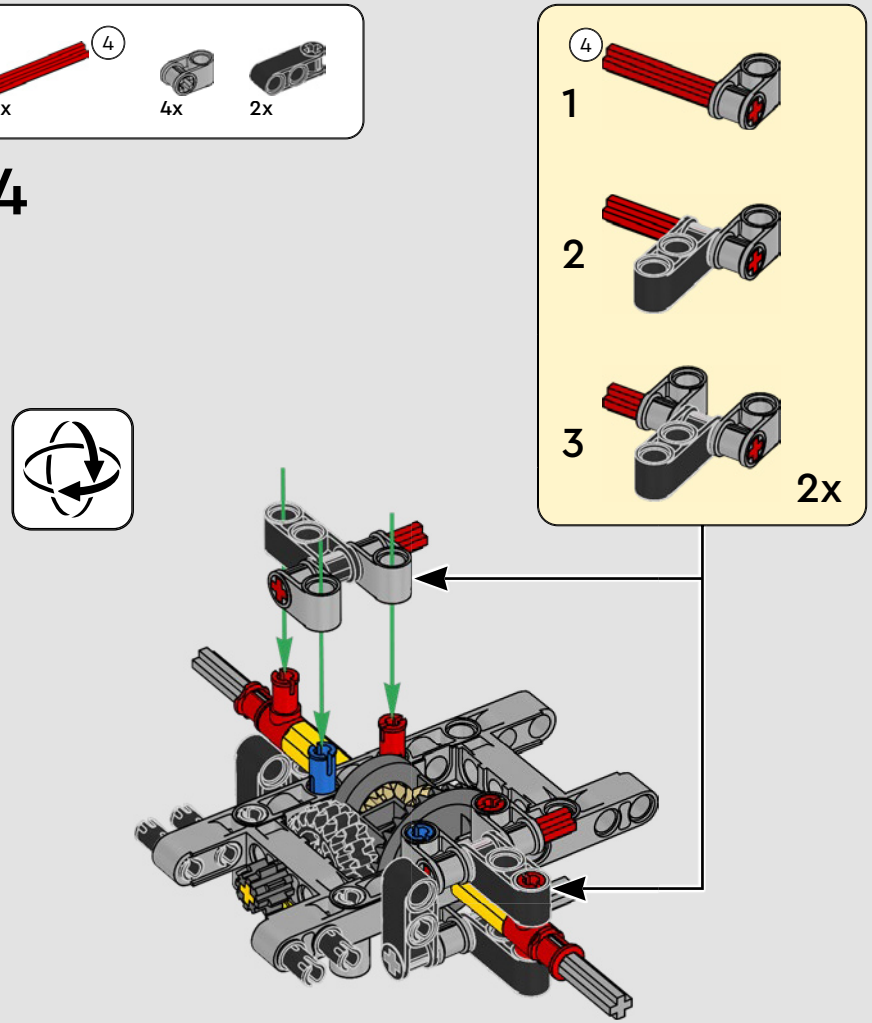

2x

45

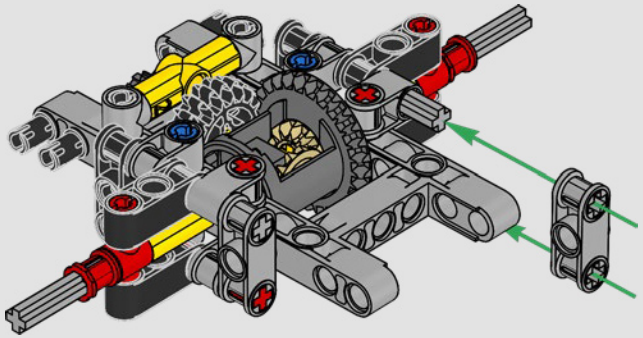

2x

46

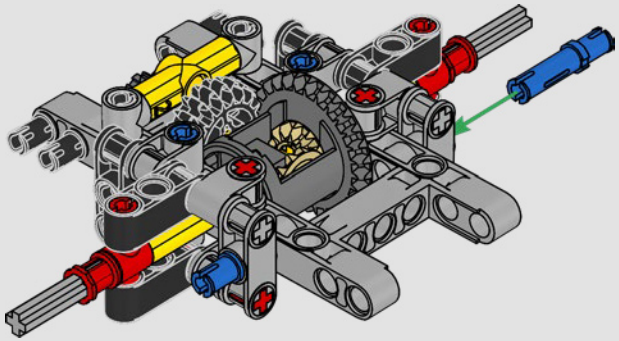

2x

47

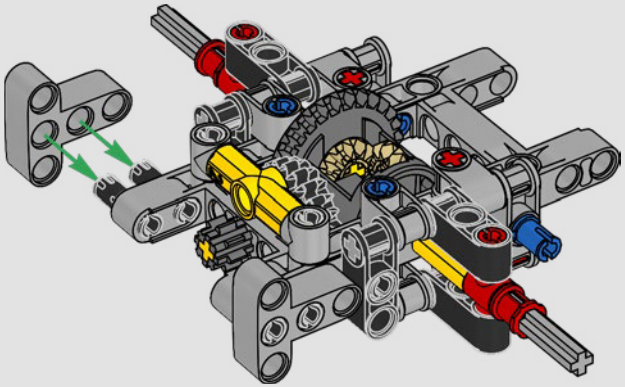

4x

48

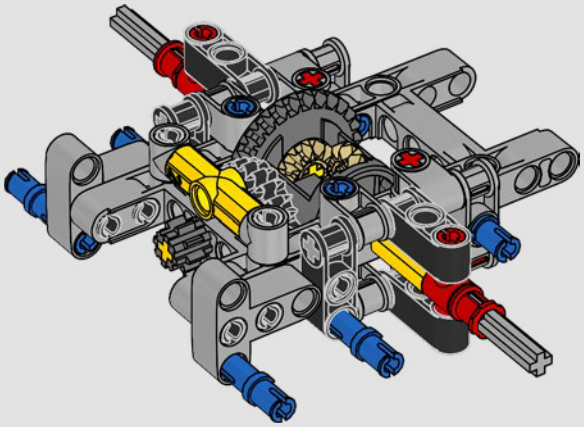

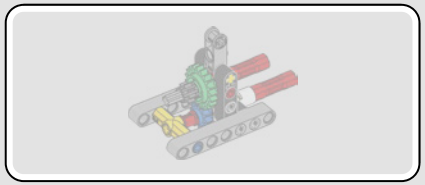

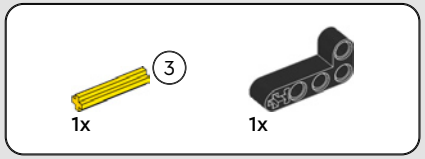

49

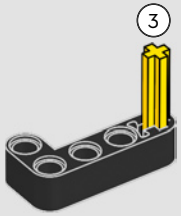

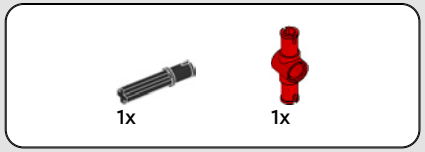

50

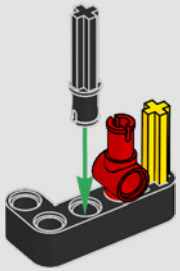

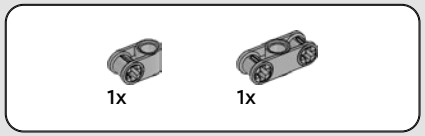

51

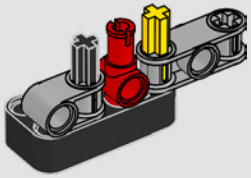

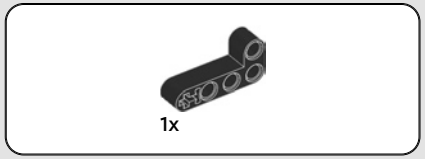

52

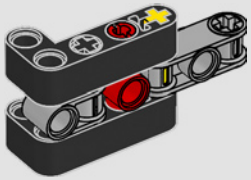

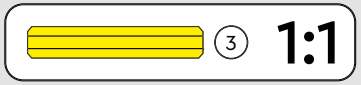

53

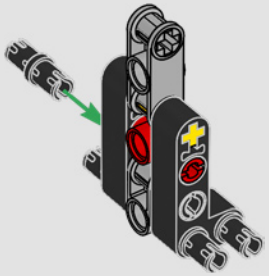

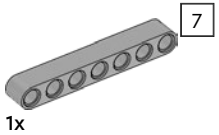

54

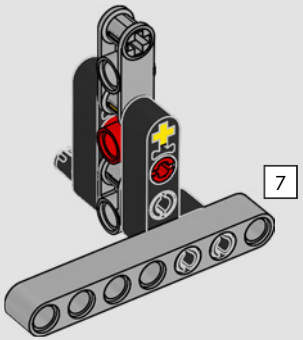

1:1

55

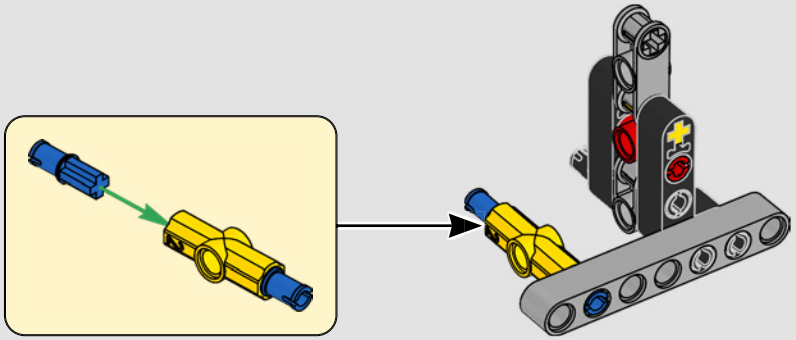

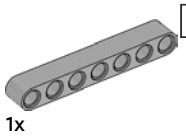

56

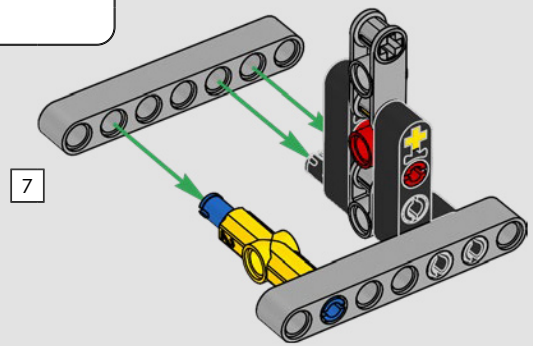

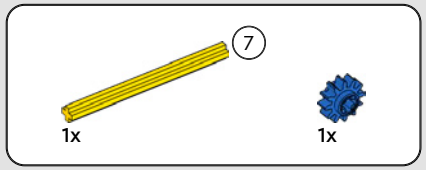

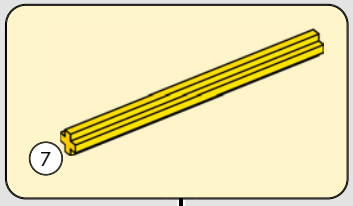

57

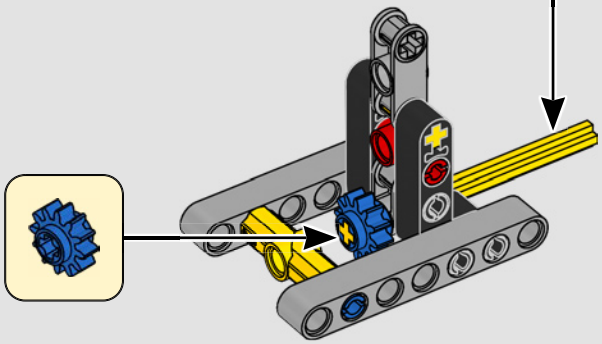

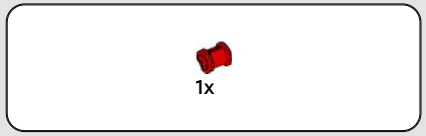

58

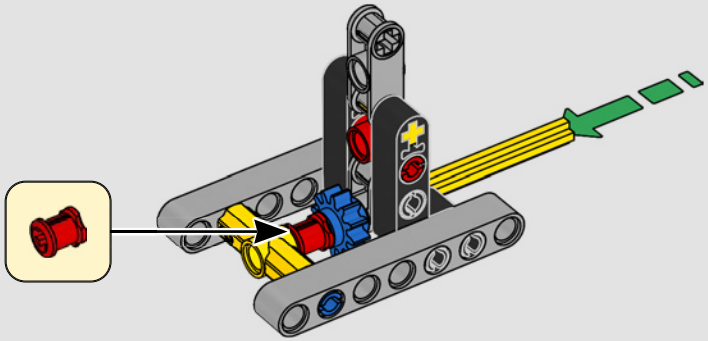

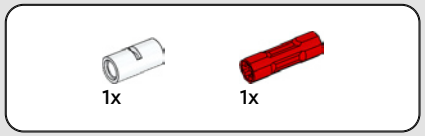

59

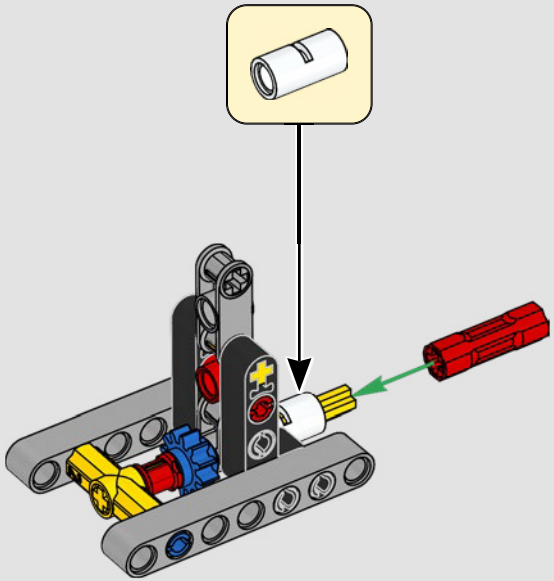

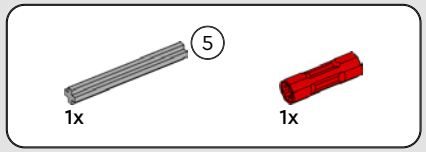

60

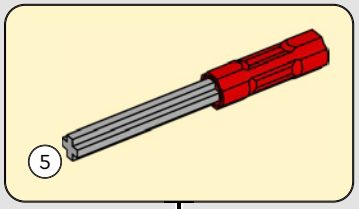

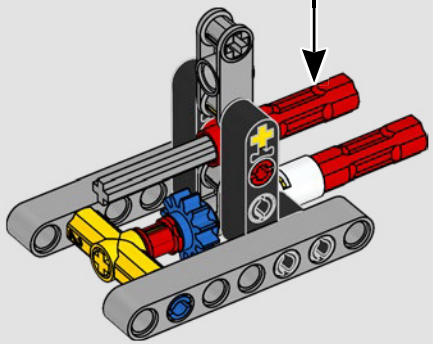

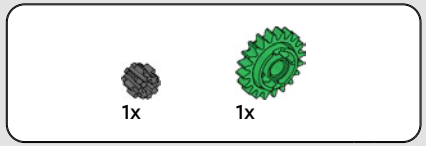

61

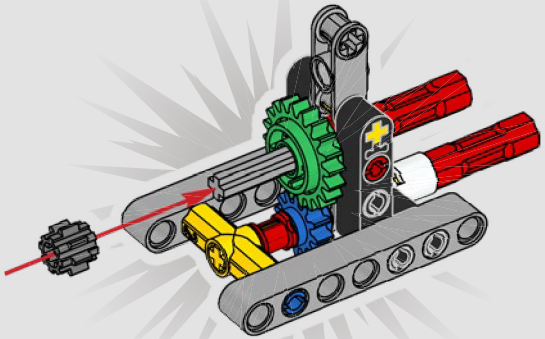

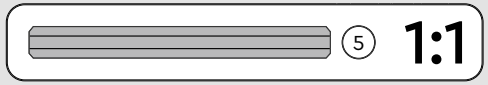

62

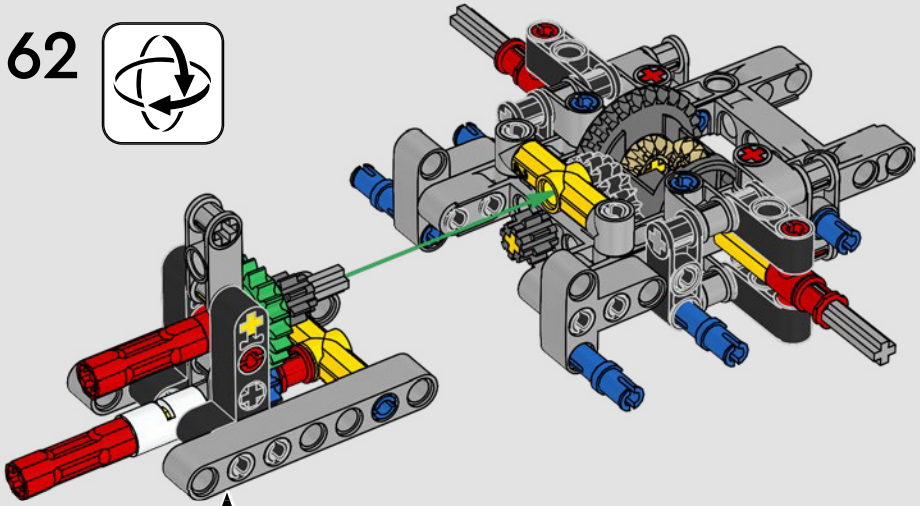

63

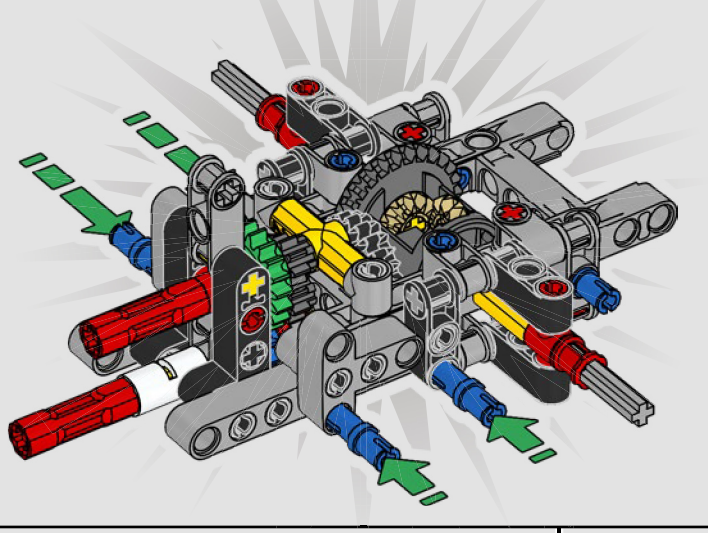

64

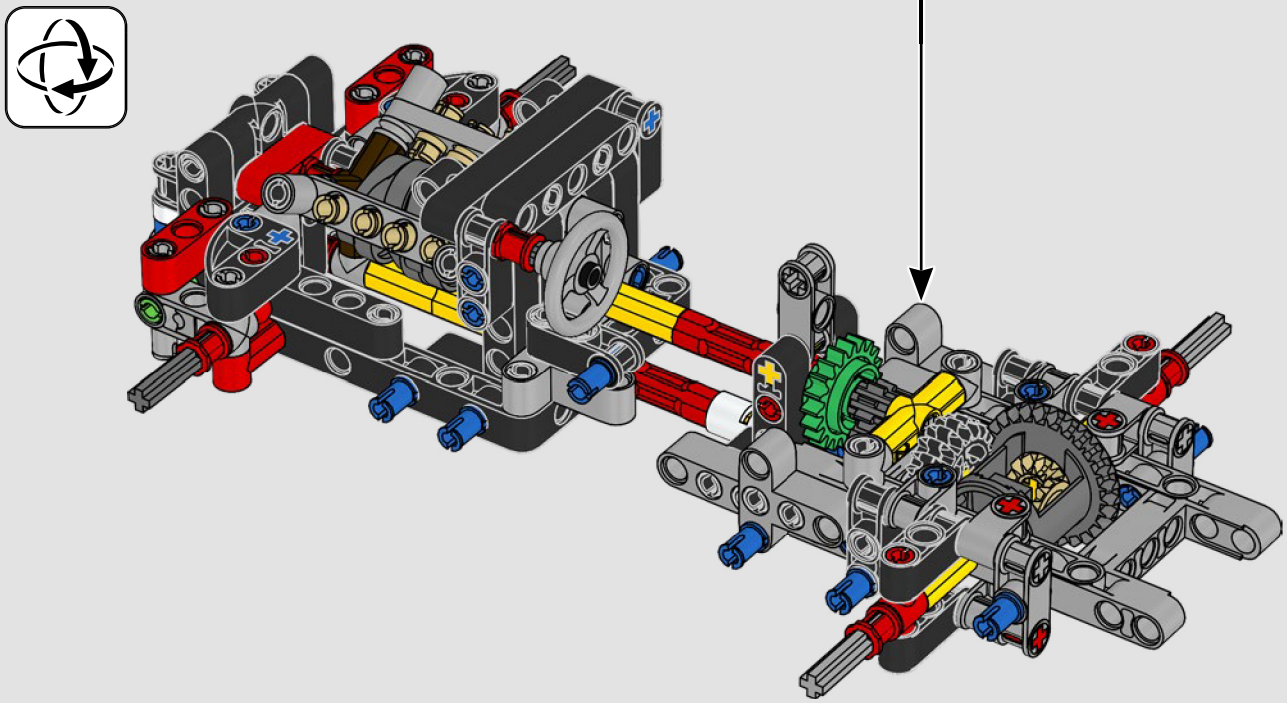

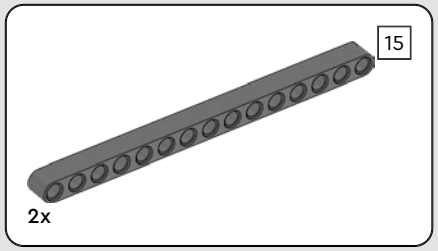

65

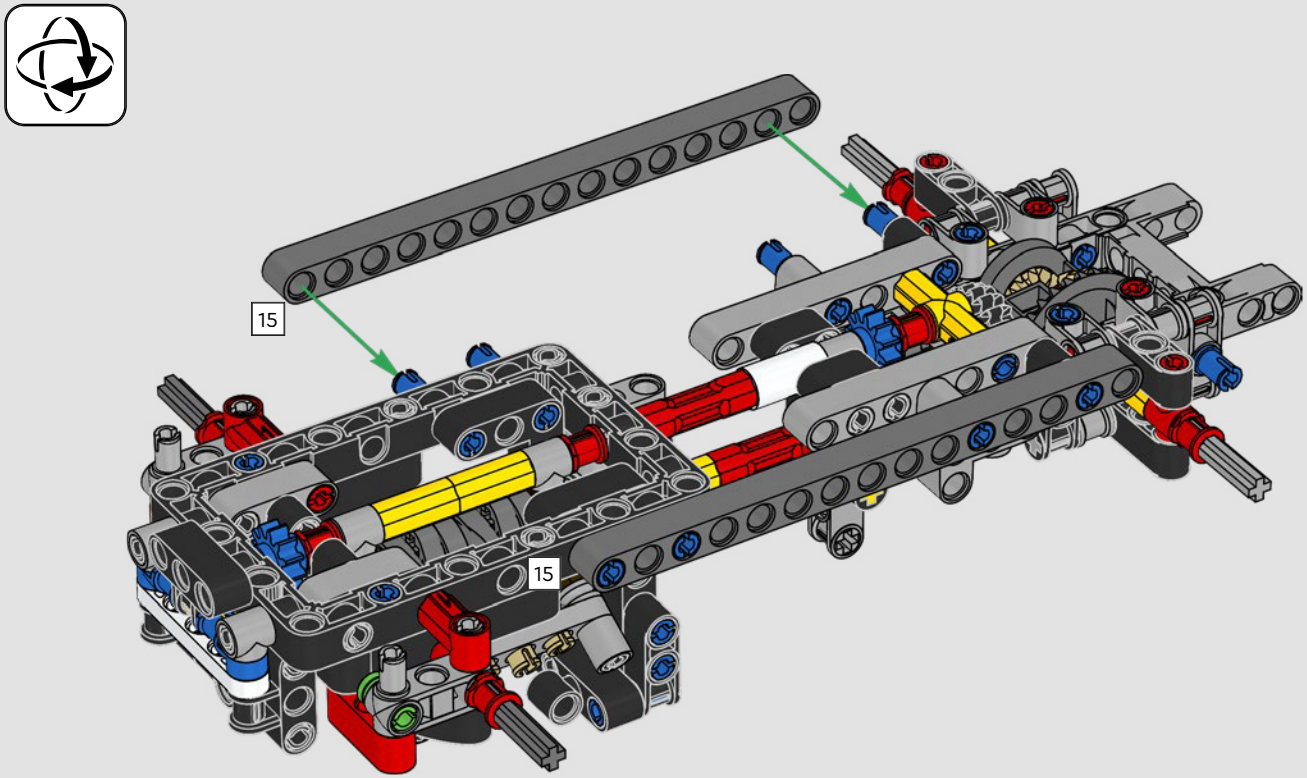

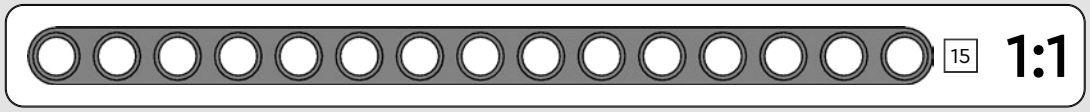

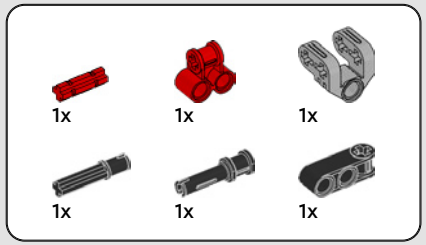

66

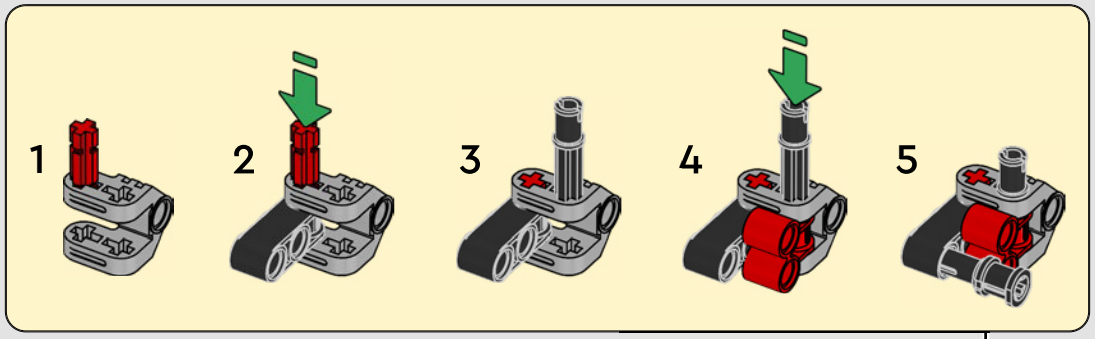

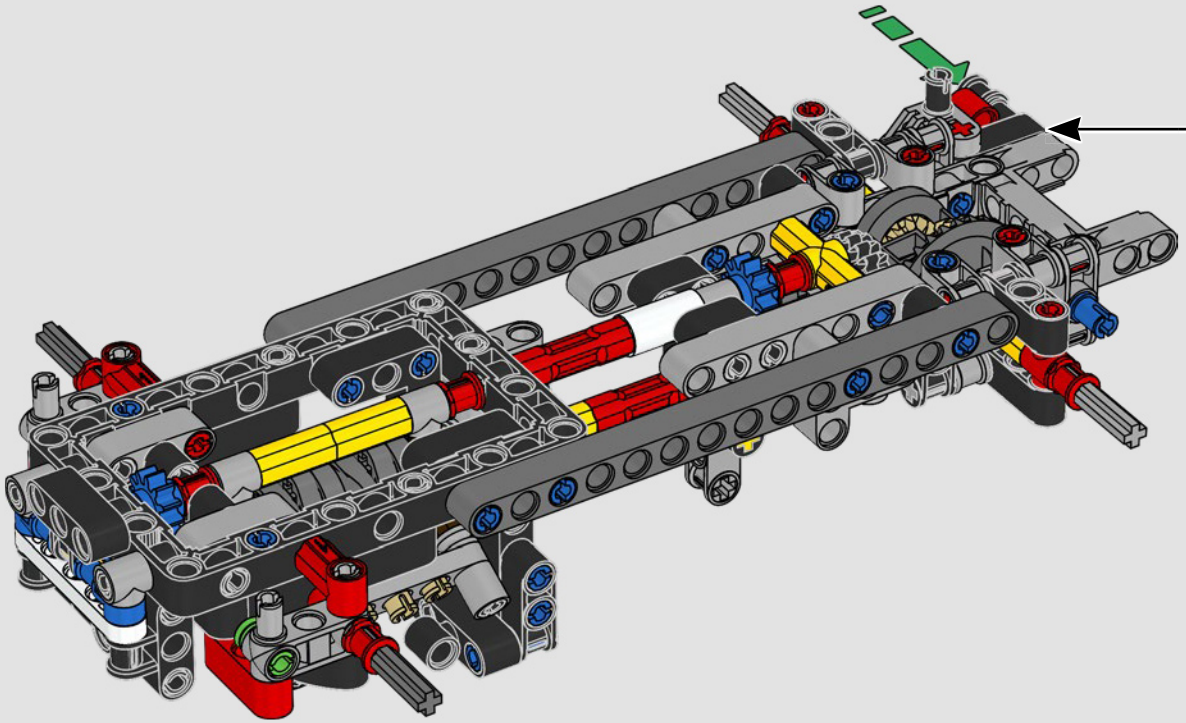

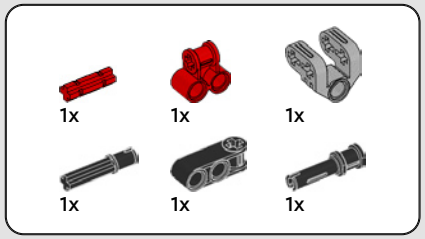

67

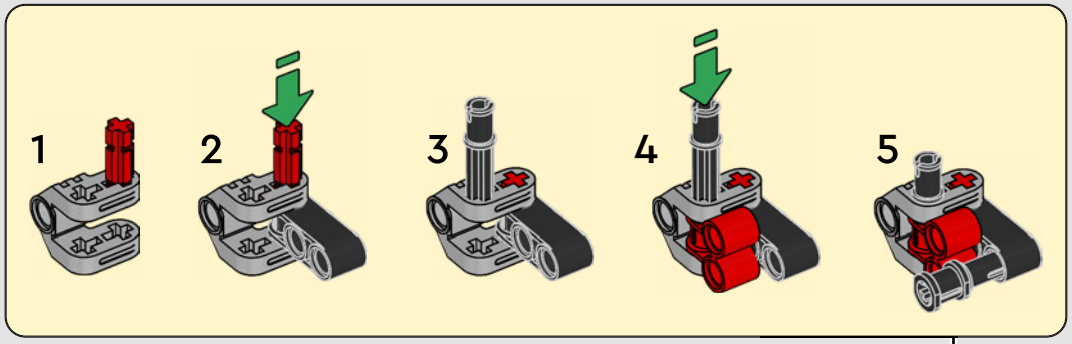

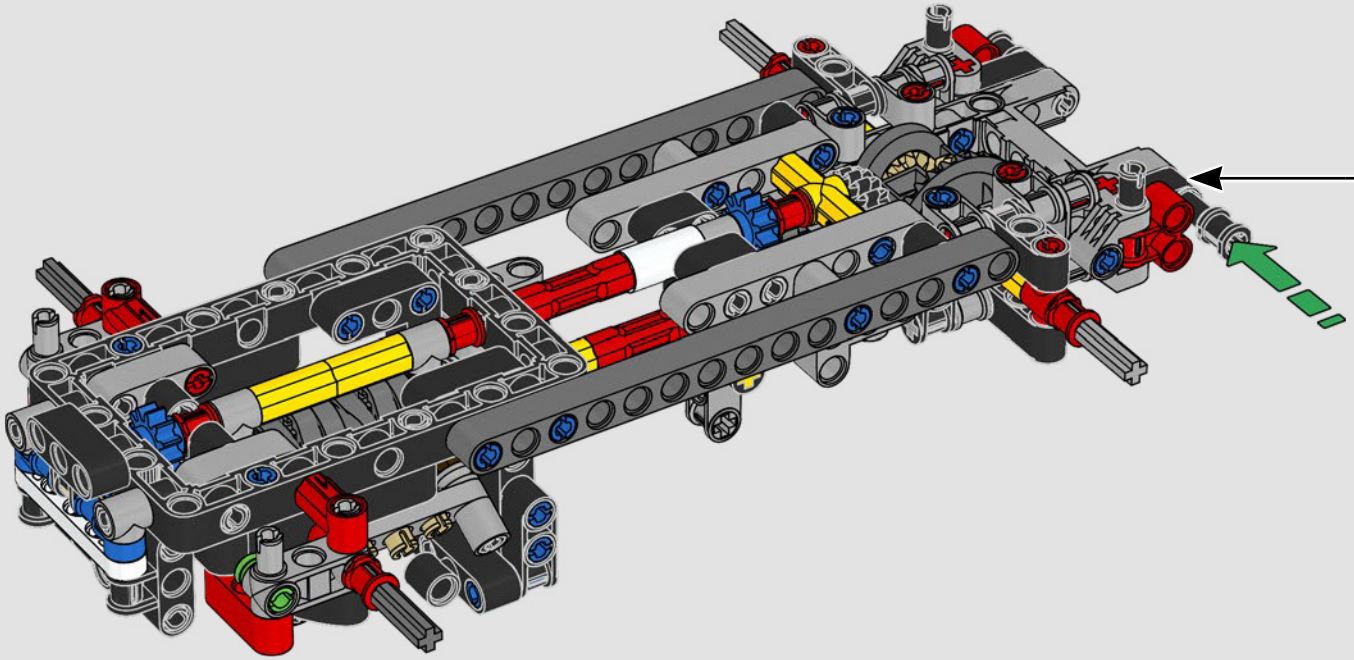

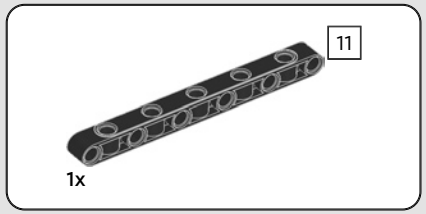

68

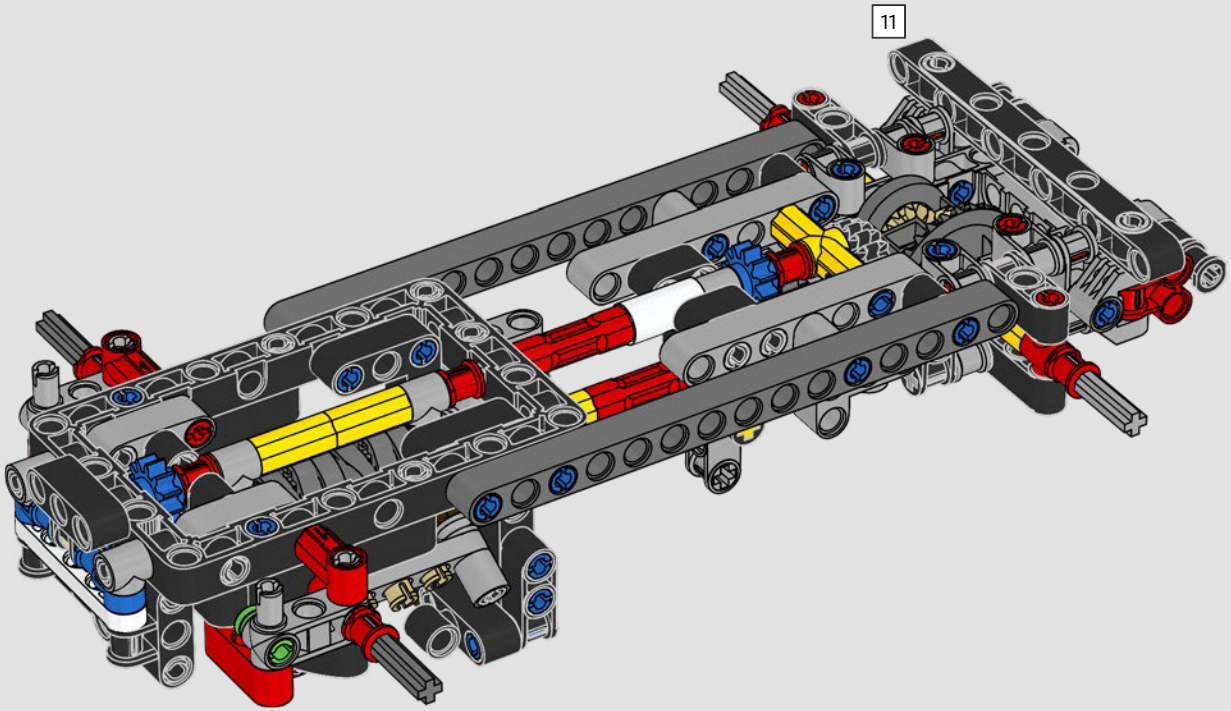

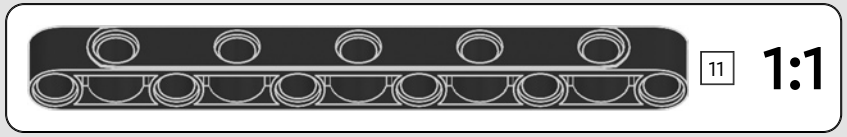

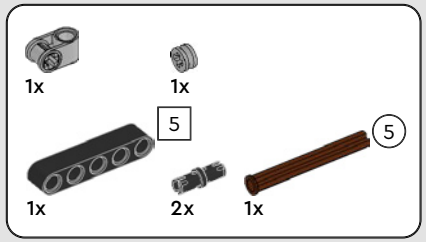

69

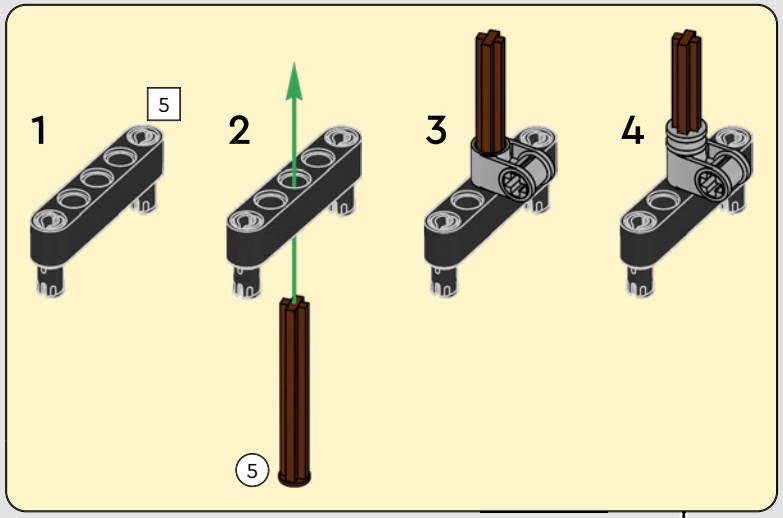

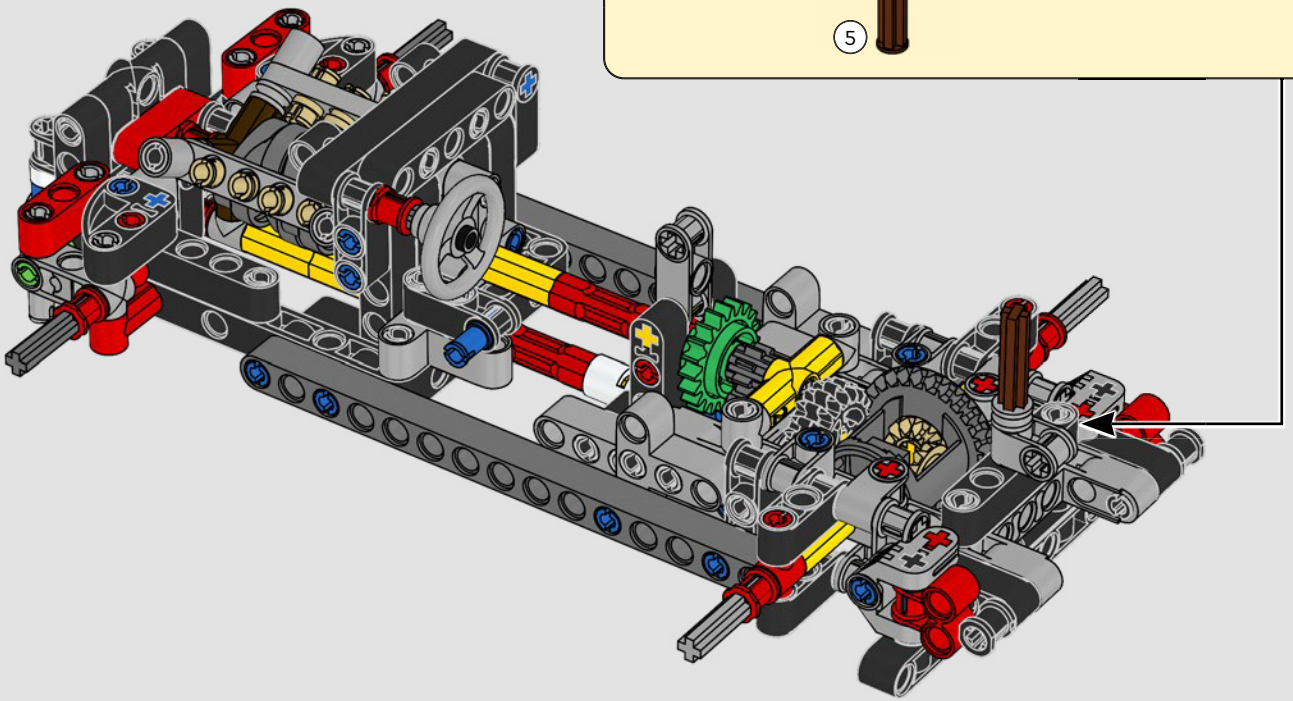

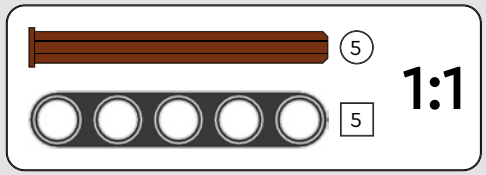

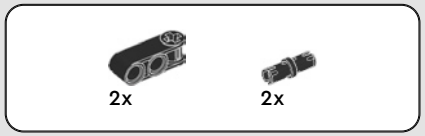

70

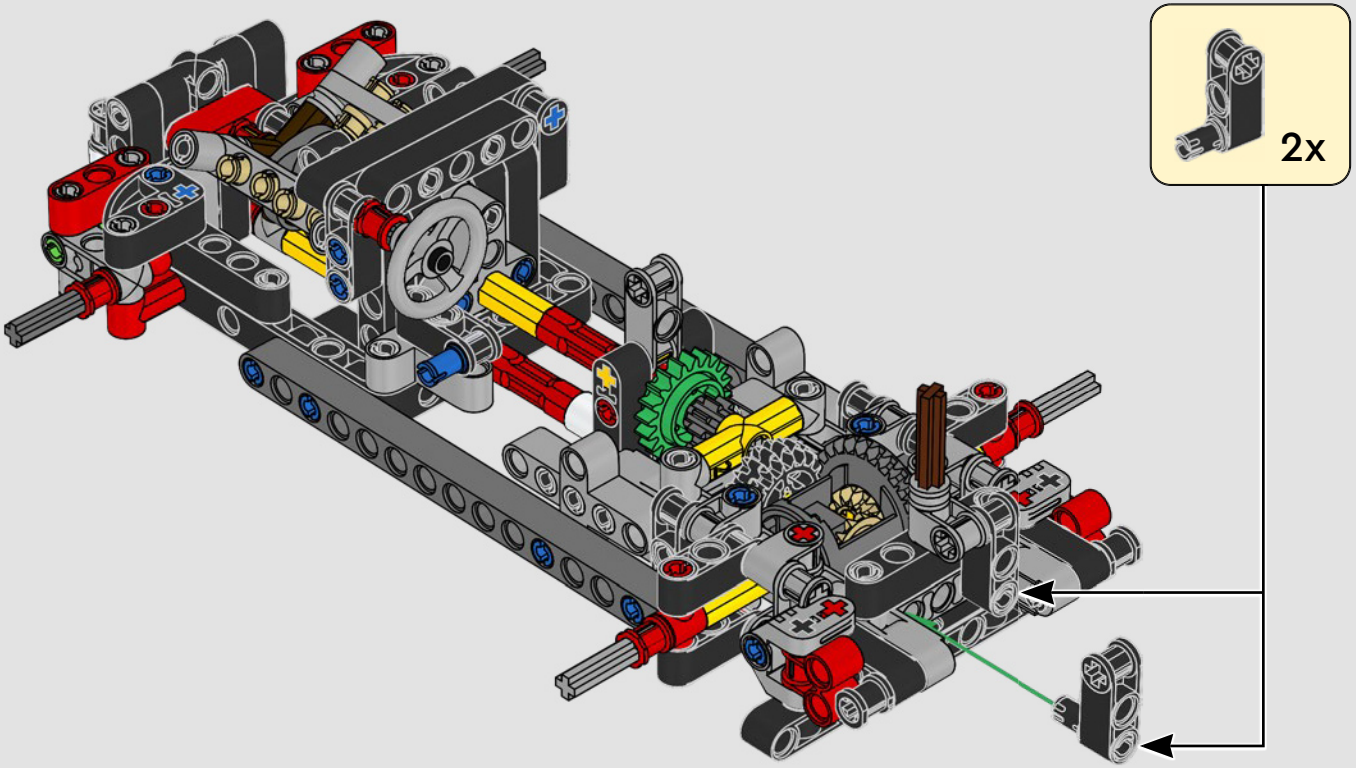

71

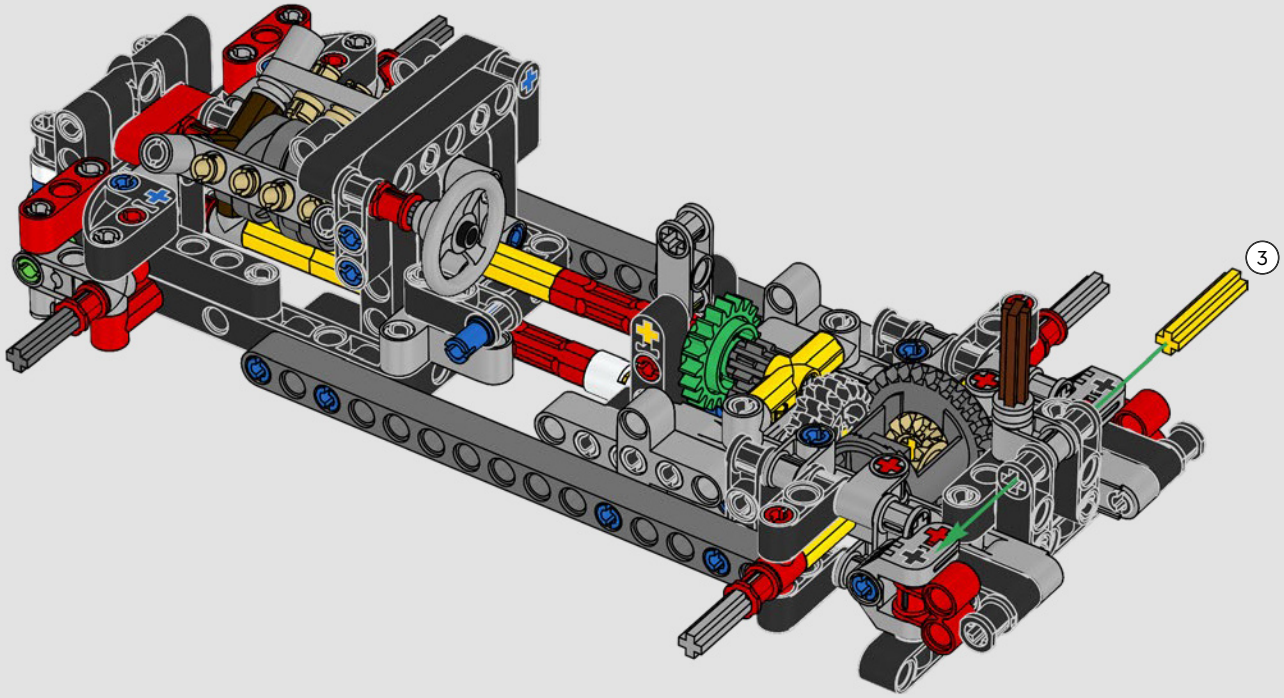

1:1

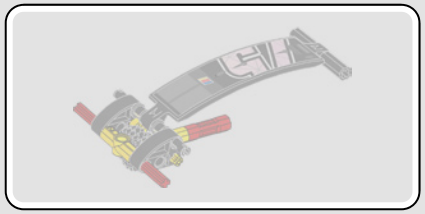

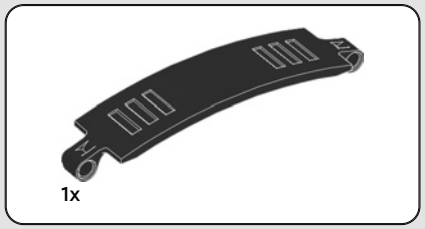

72

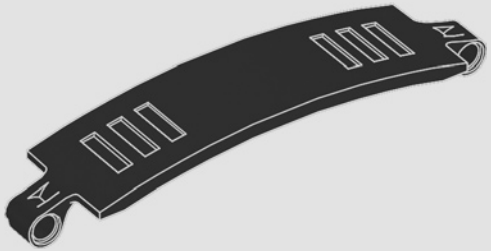

73

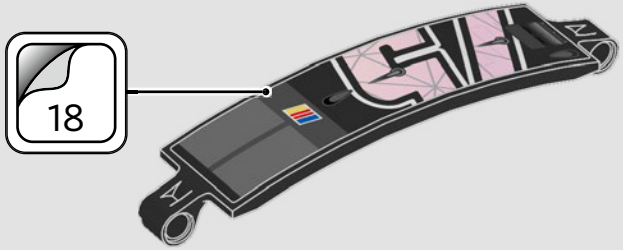

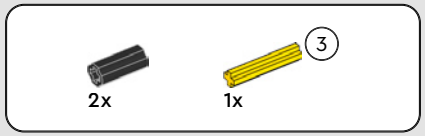

74

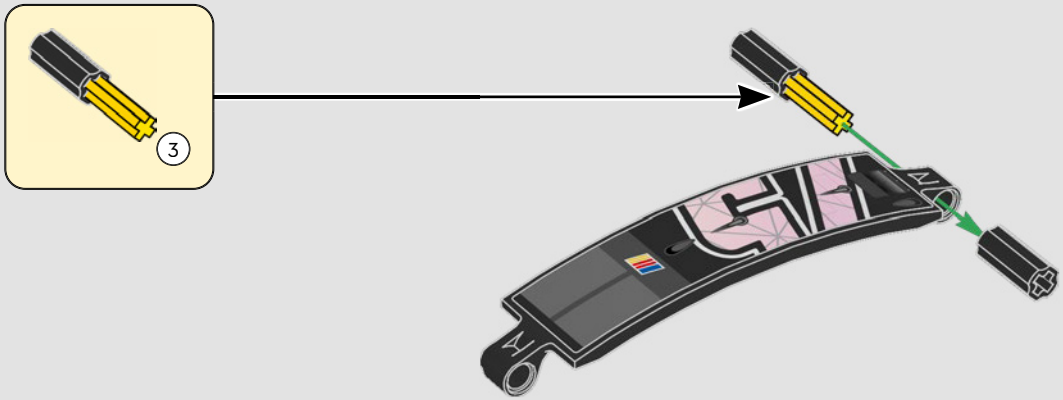

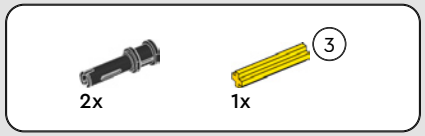

75

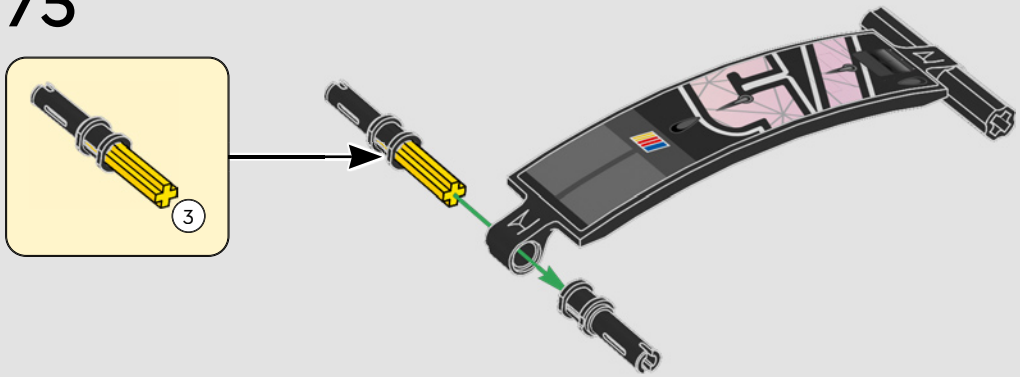

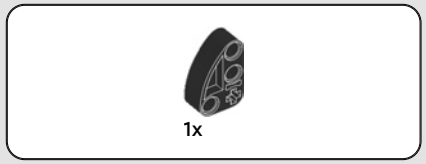

76

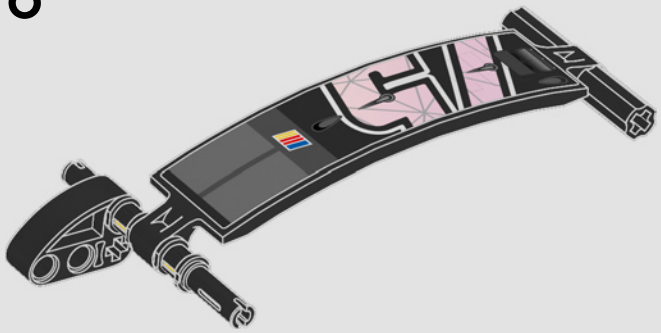

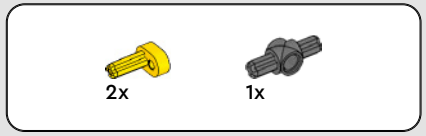

77

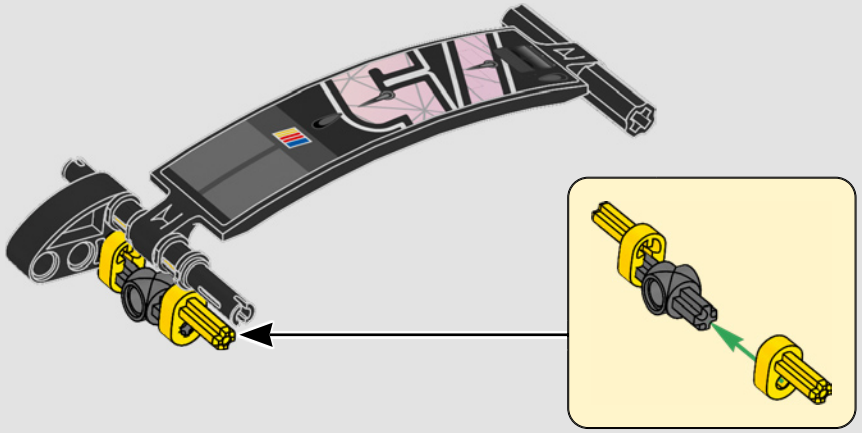

78

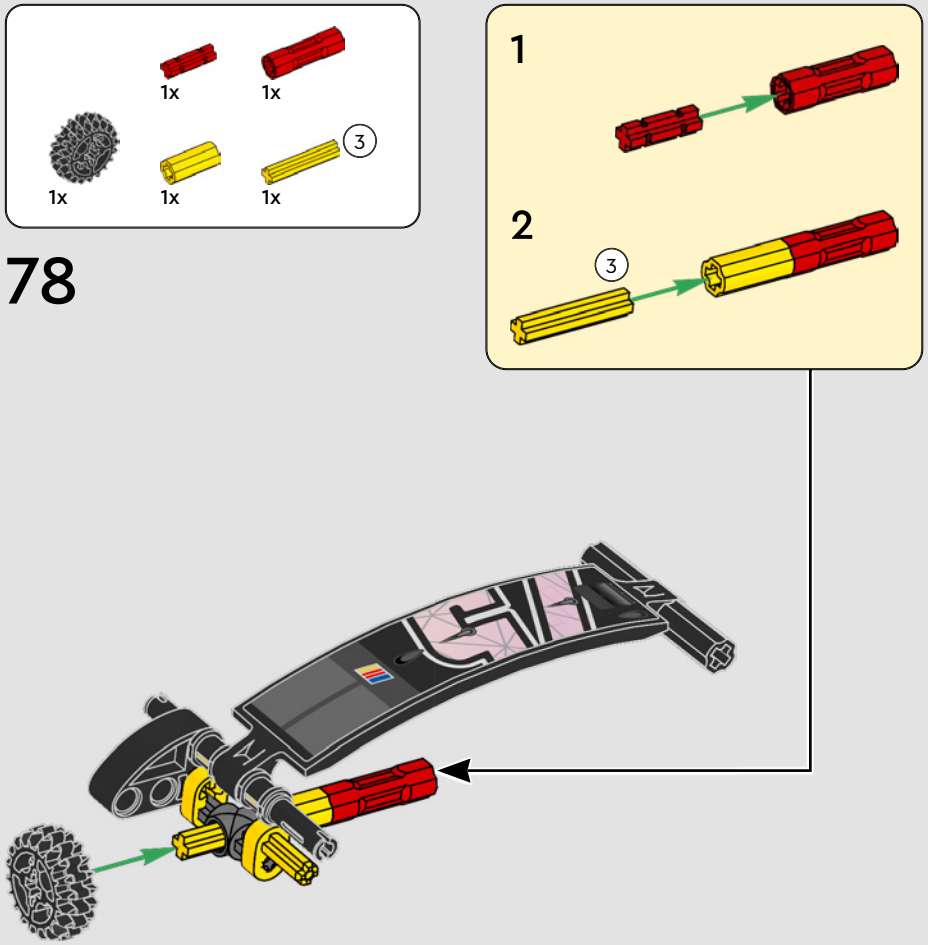

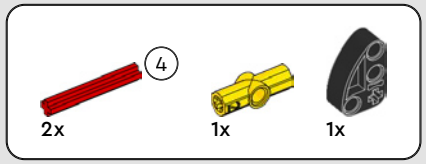

79

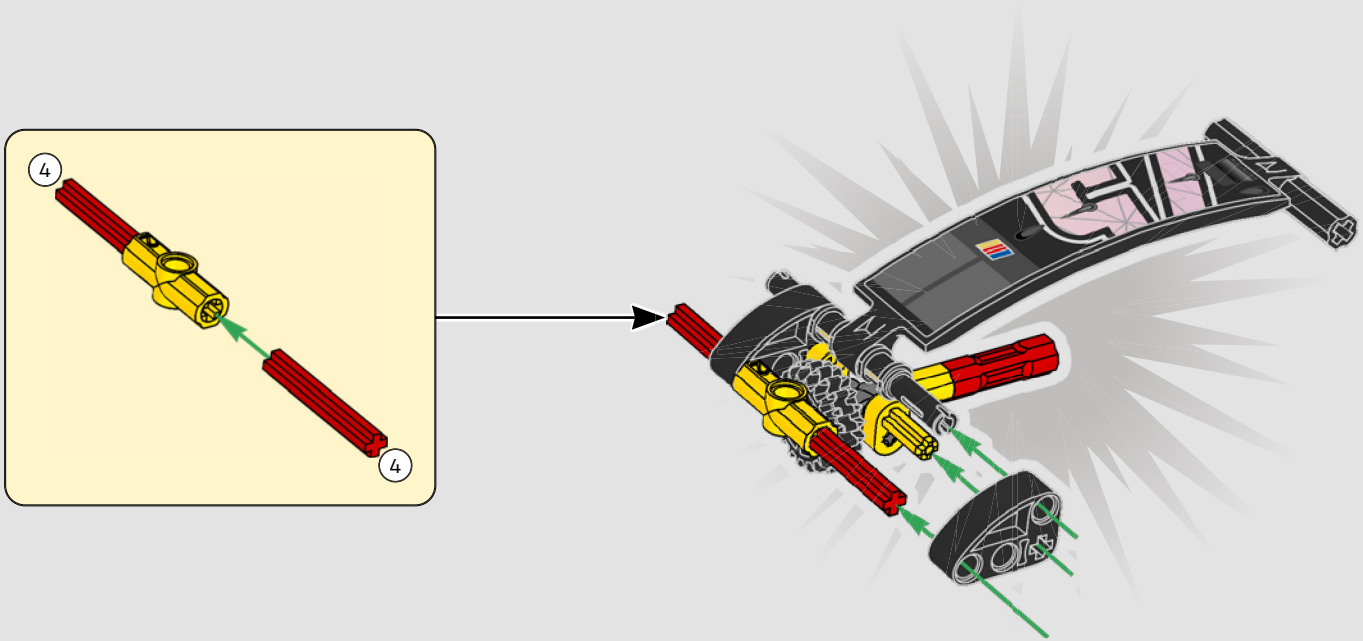

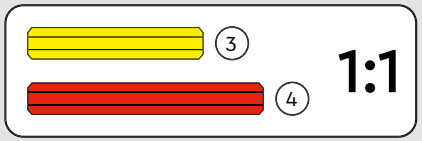

80

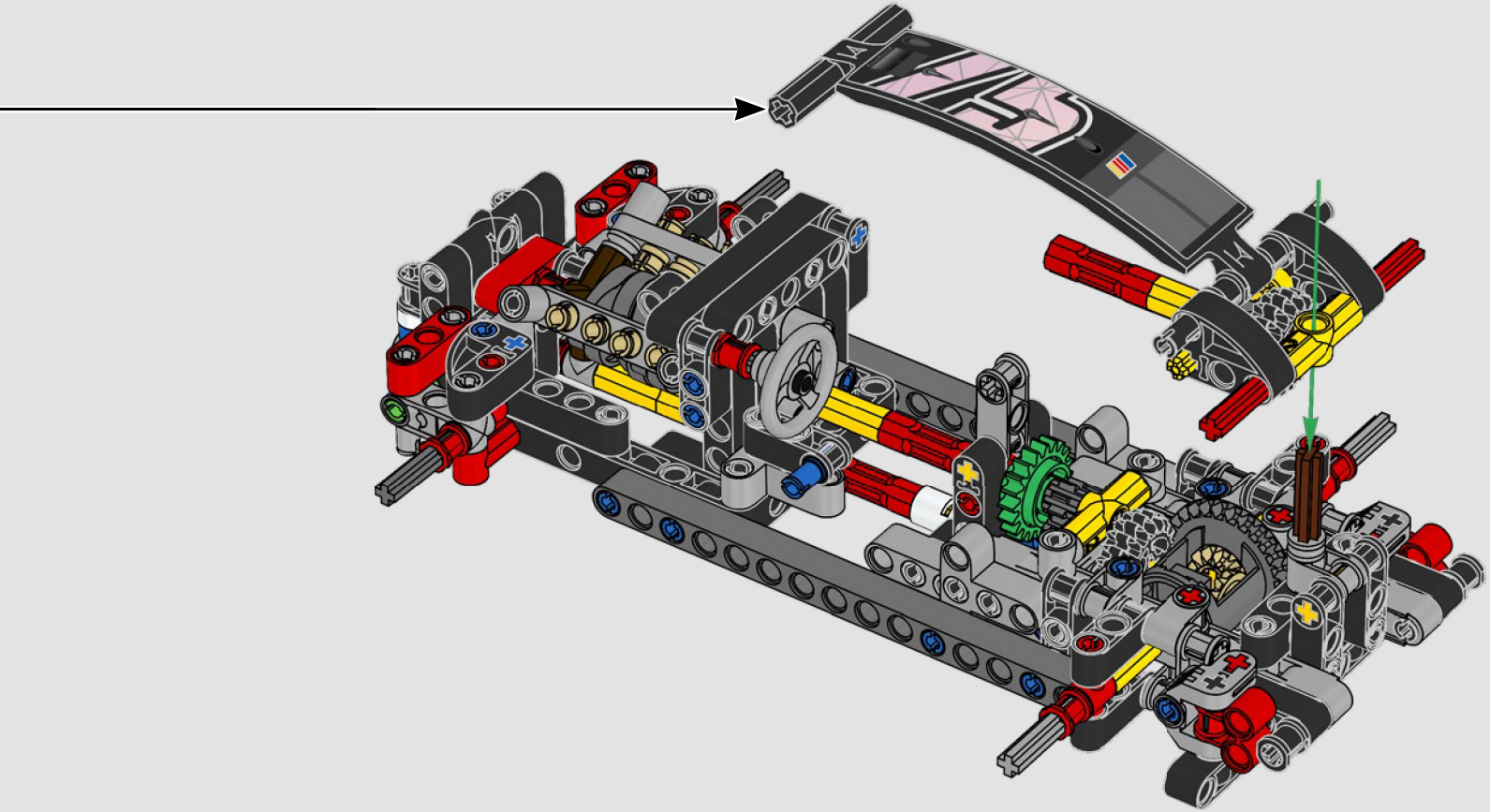

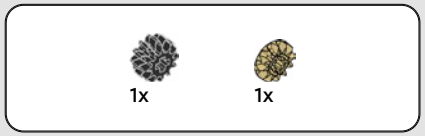

81

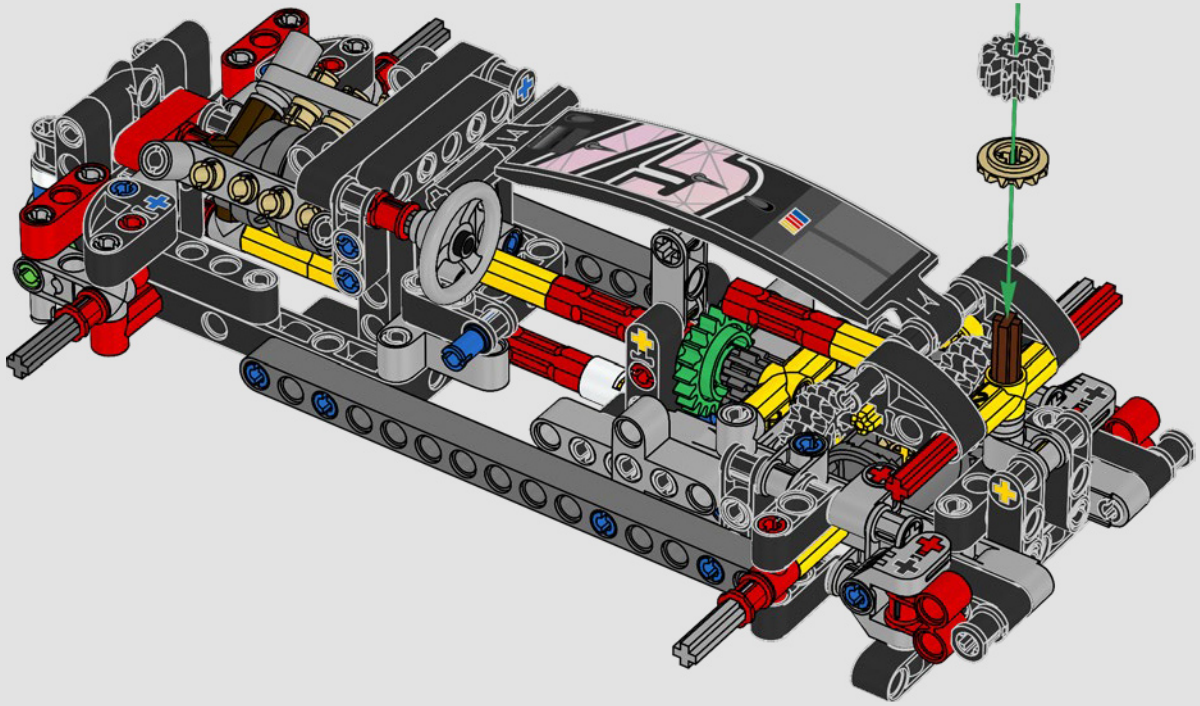

82

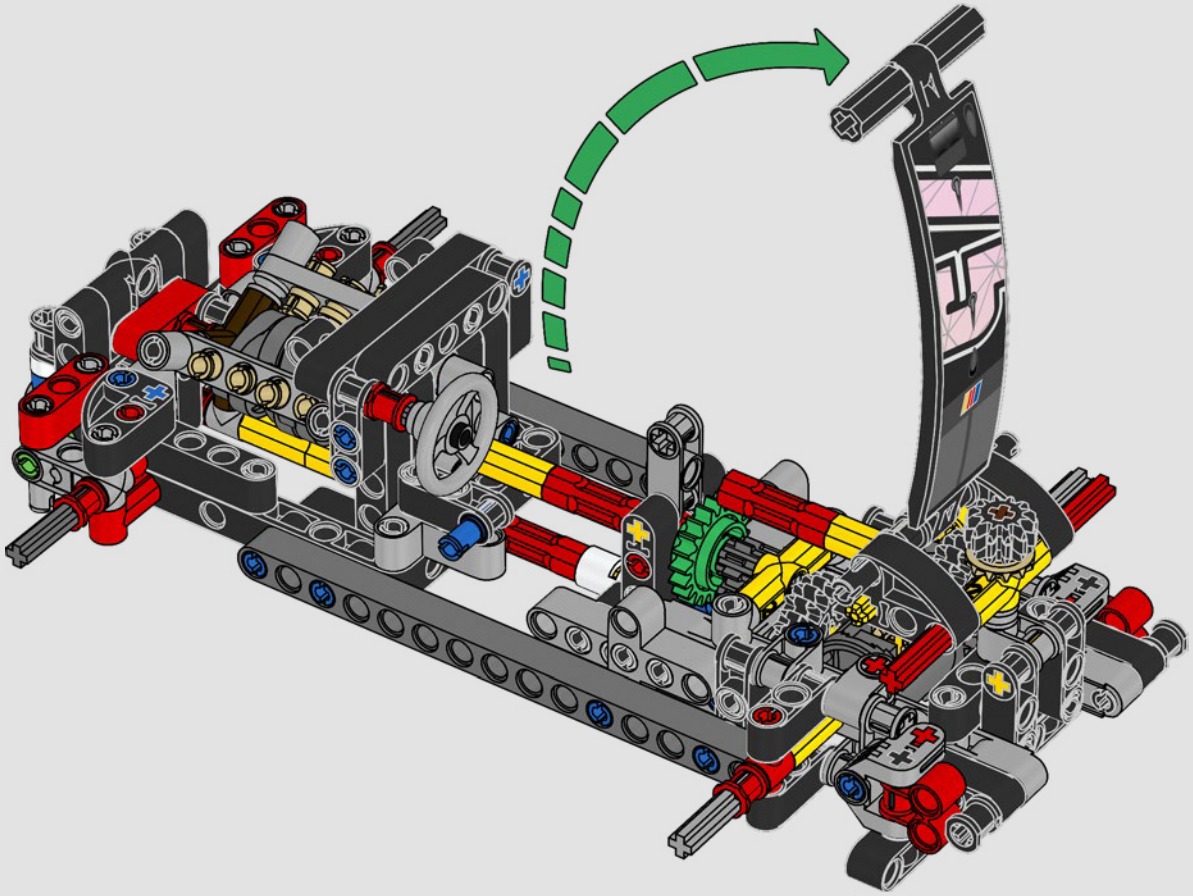

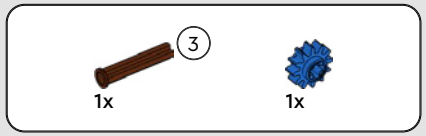

83

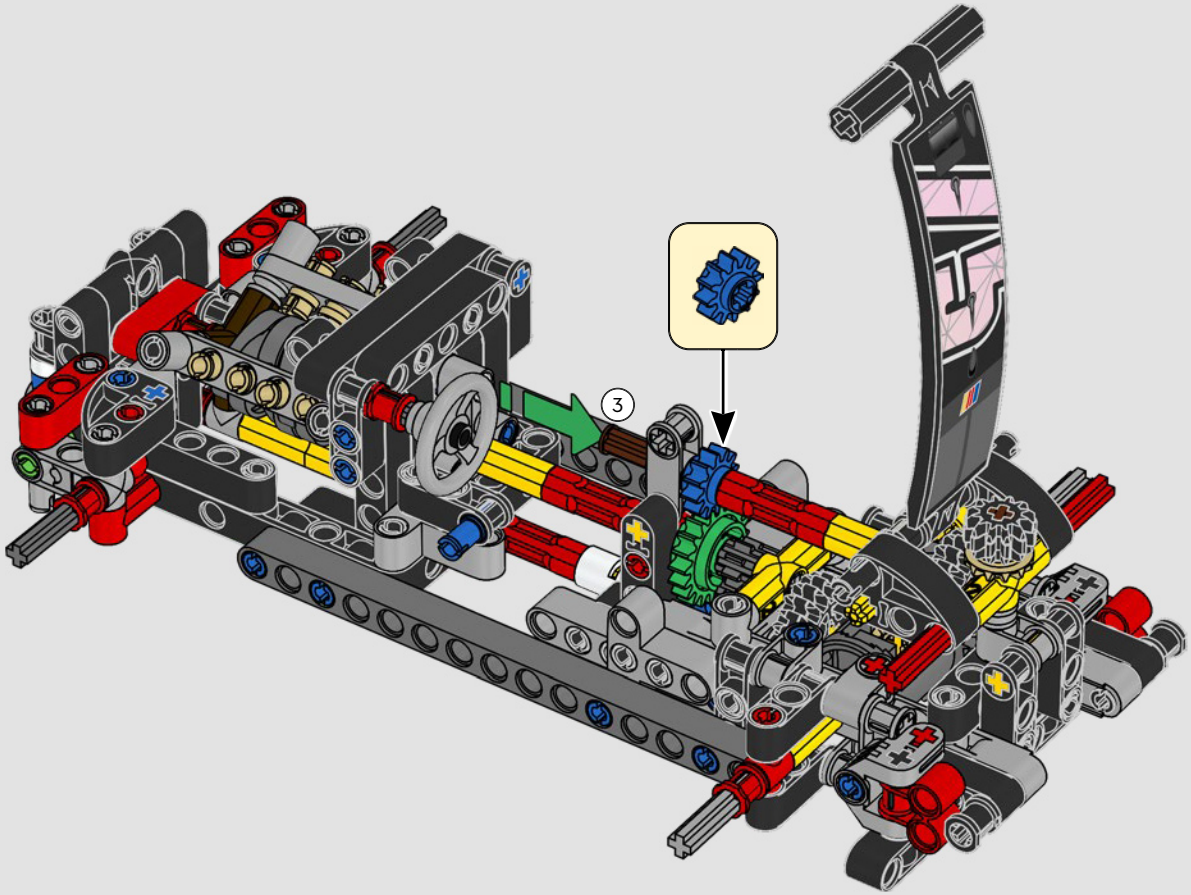

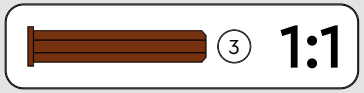

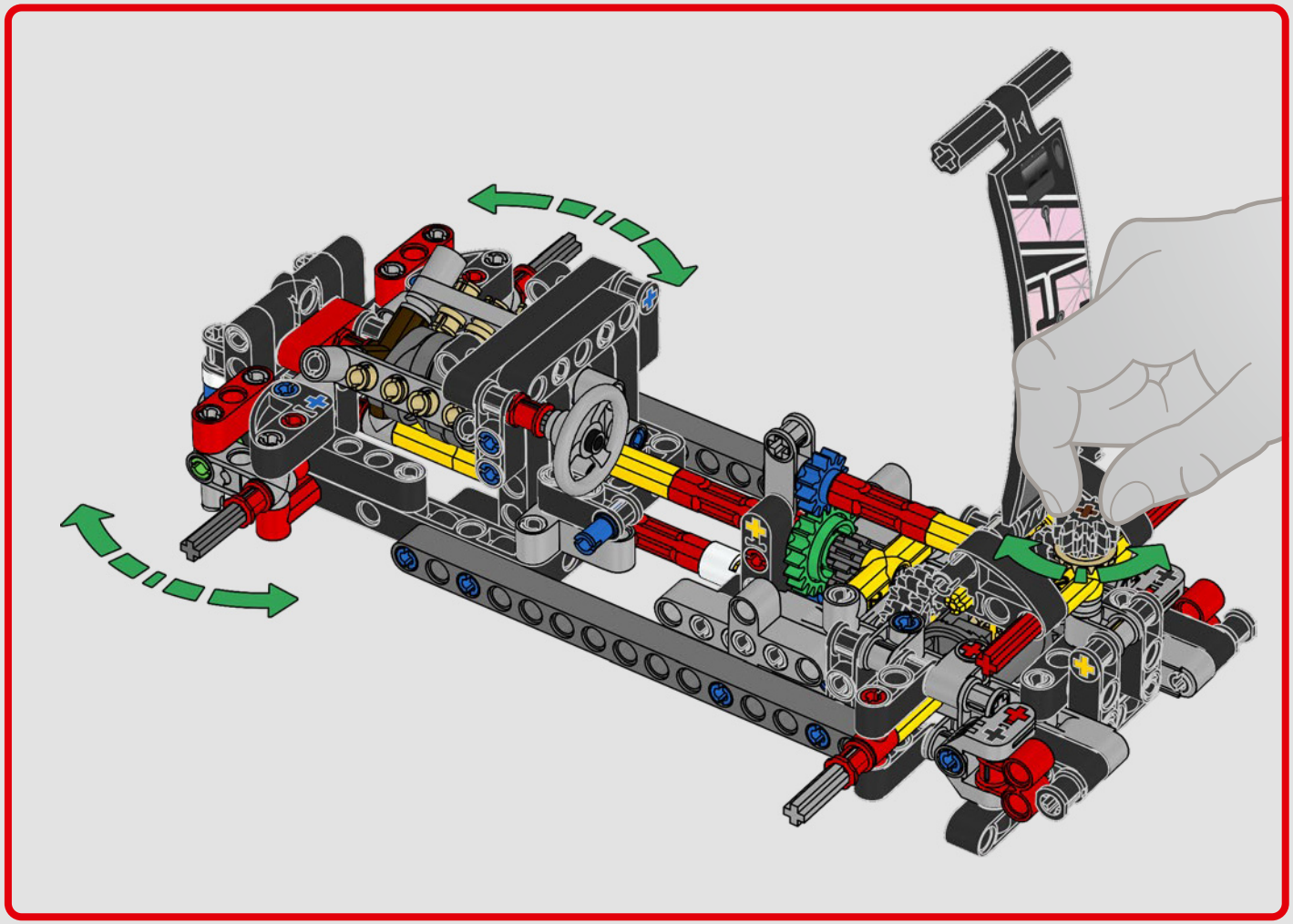

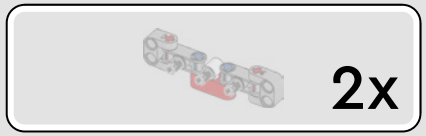

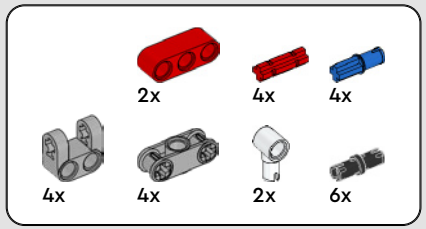

84

1

2

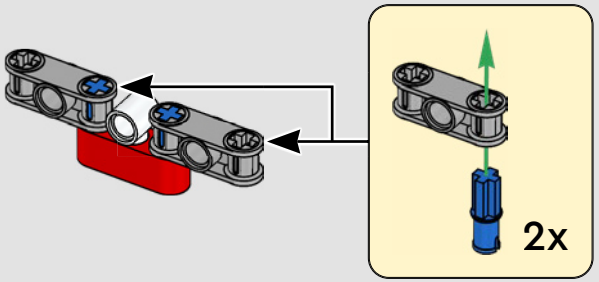

3

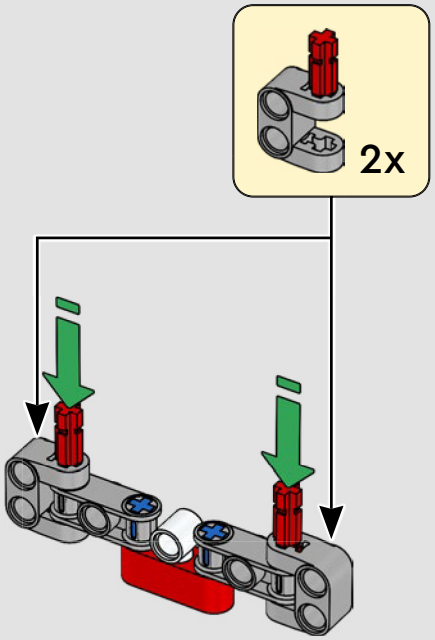

4

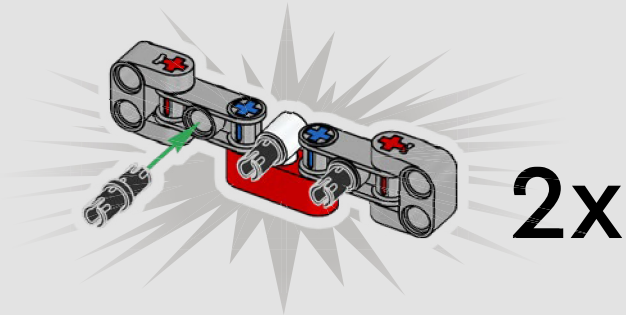

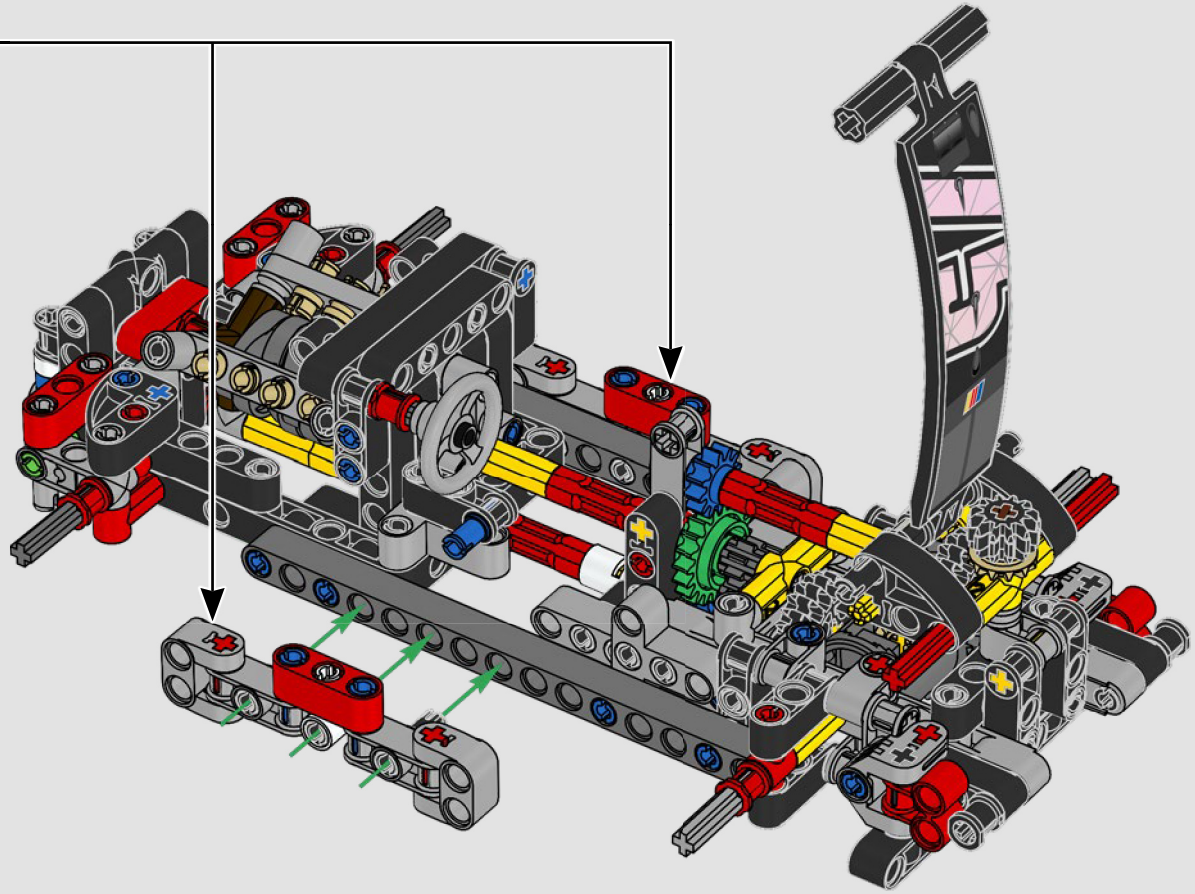

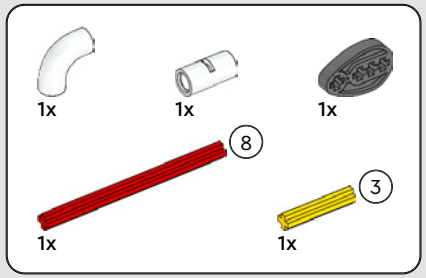

85

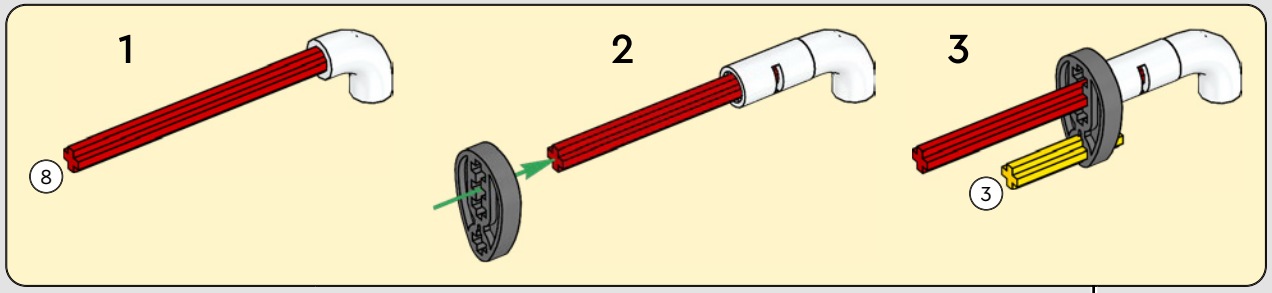

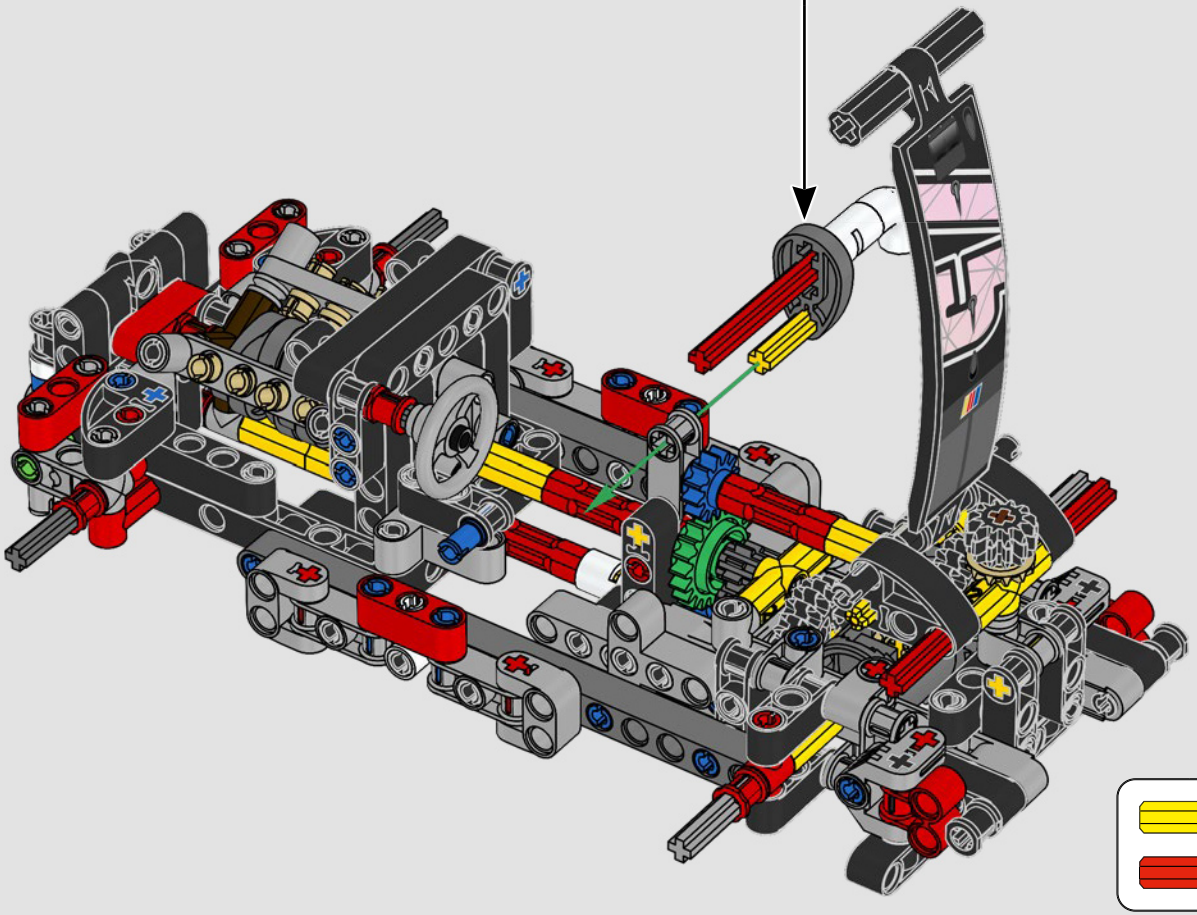

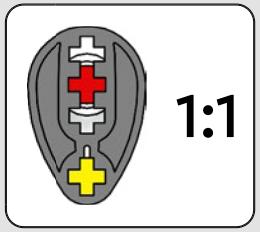

86

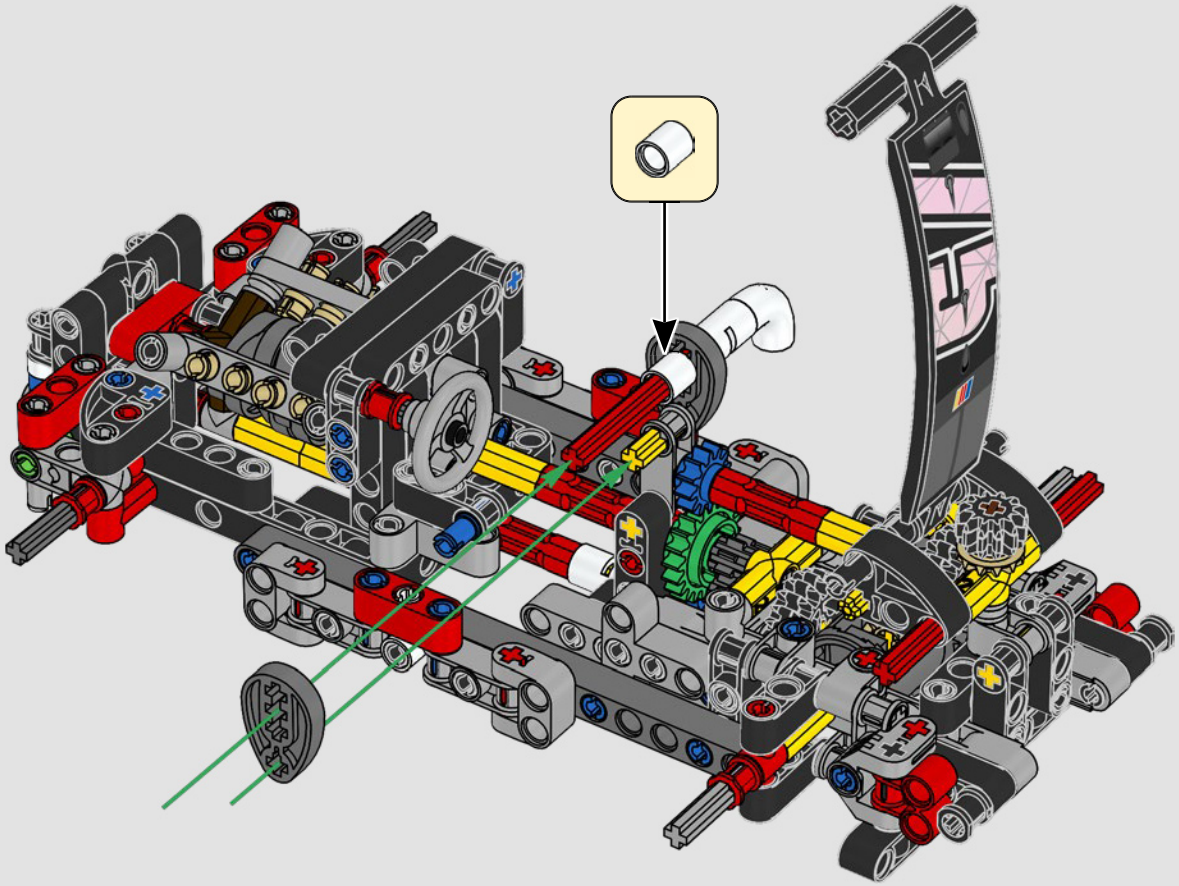

87

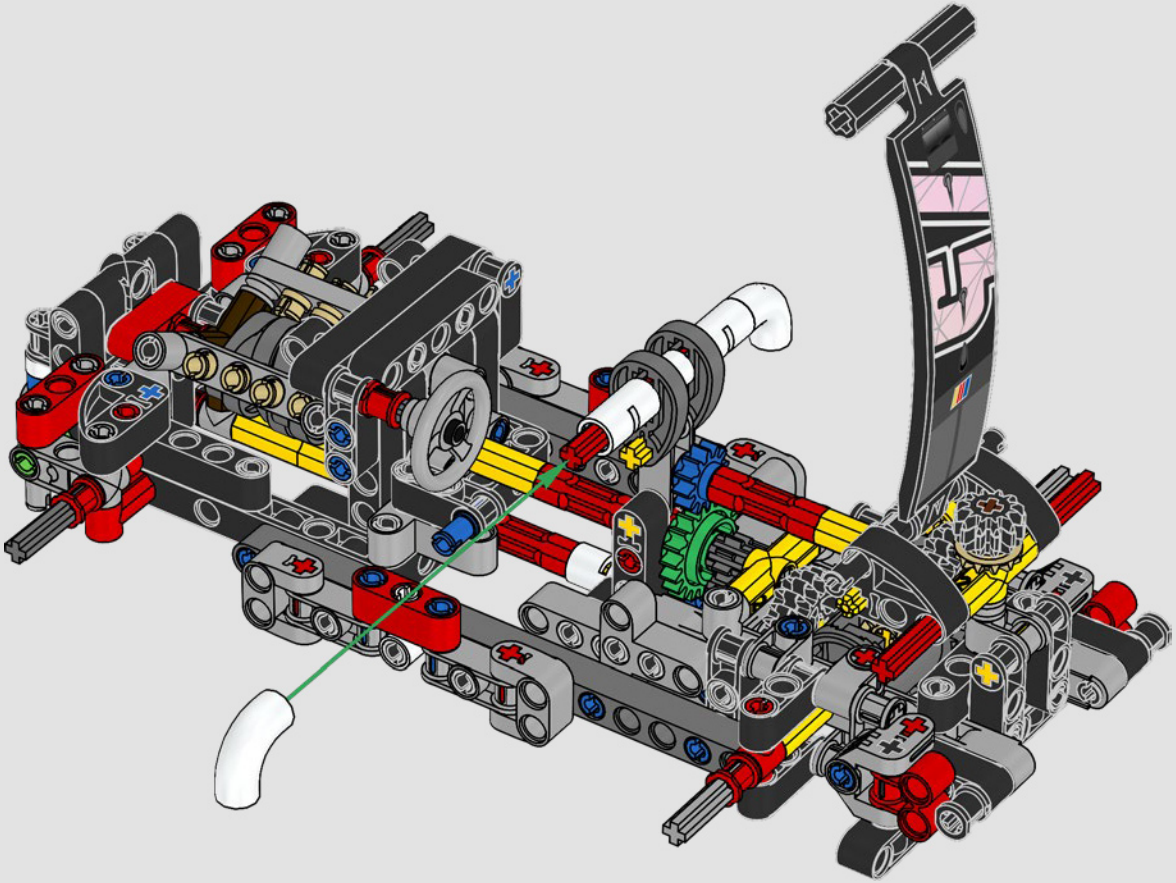

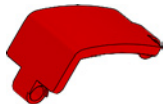

1x

88

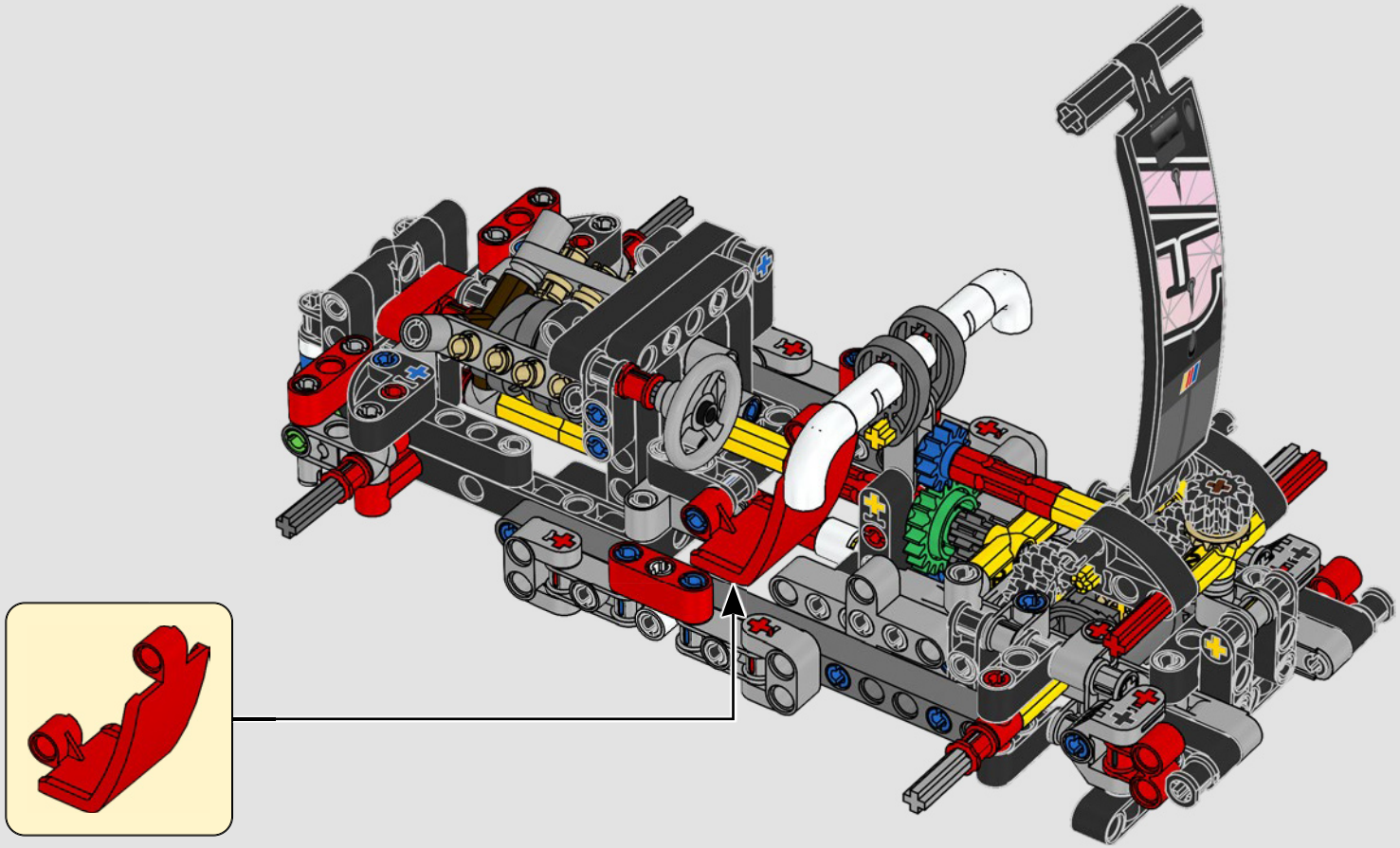

3

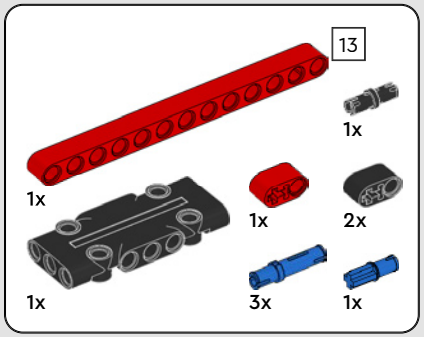

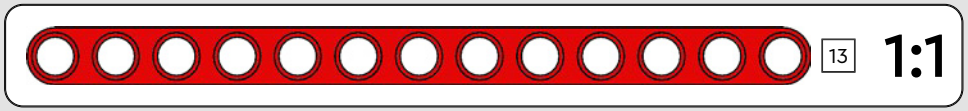

89

1

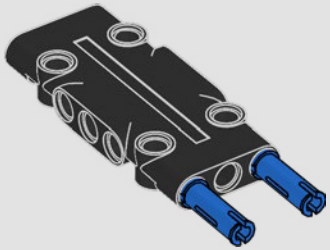

2

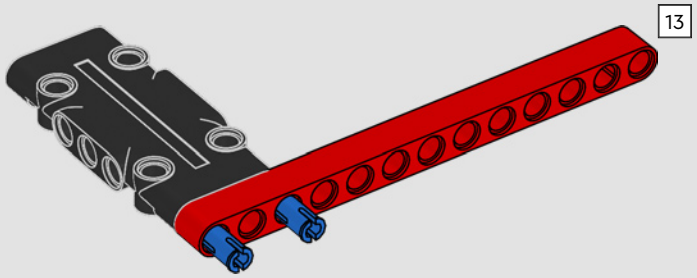

3

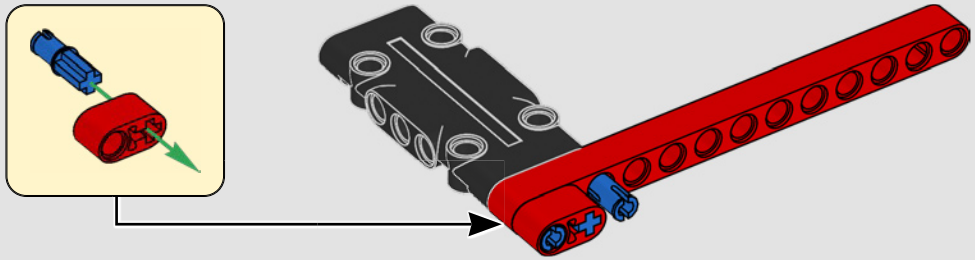

4

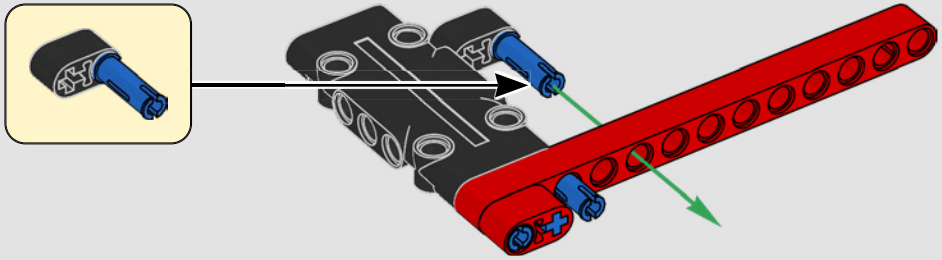

5

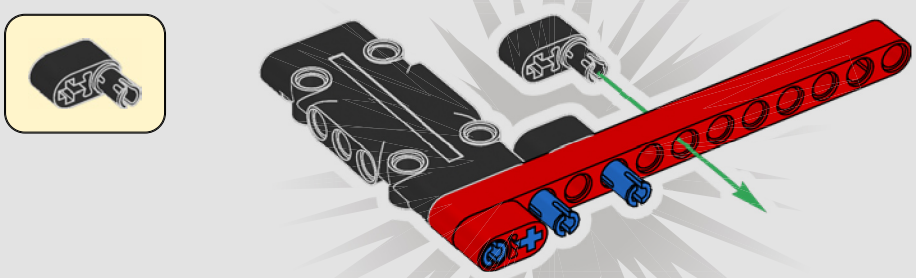

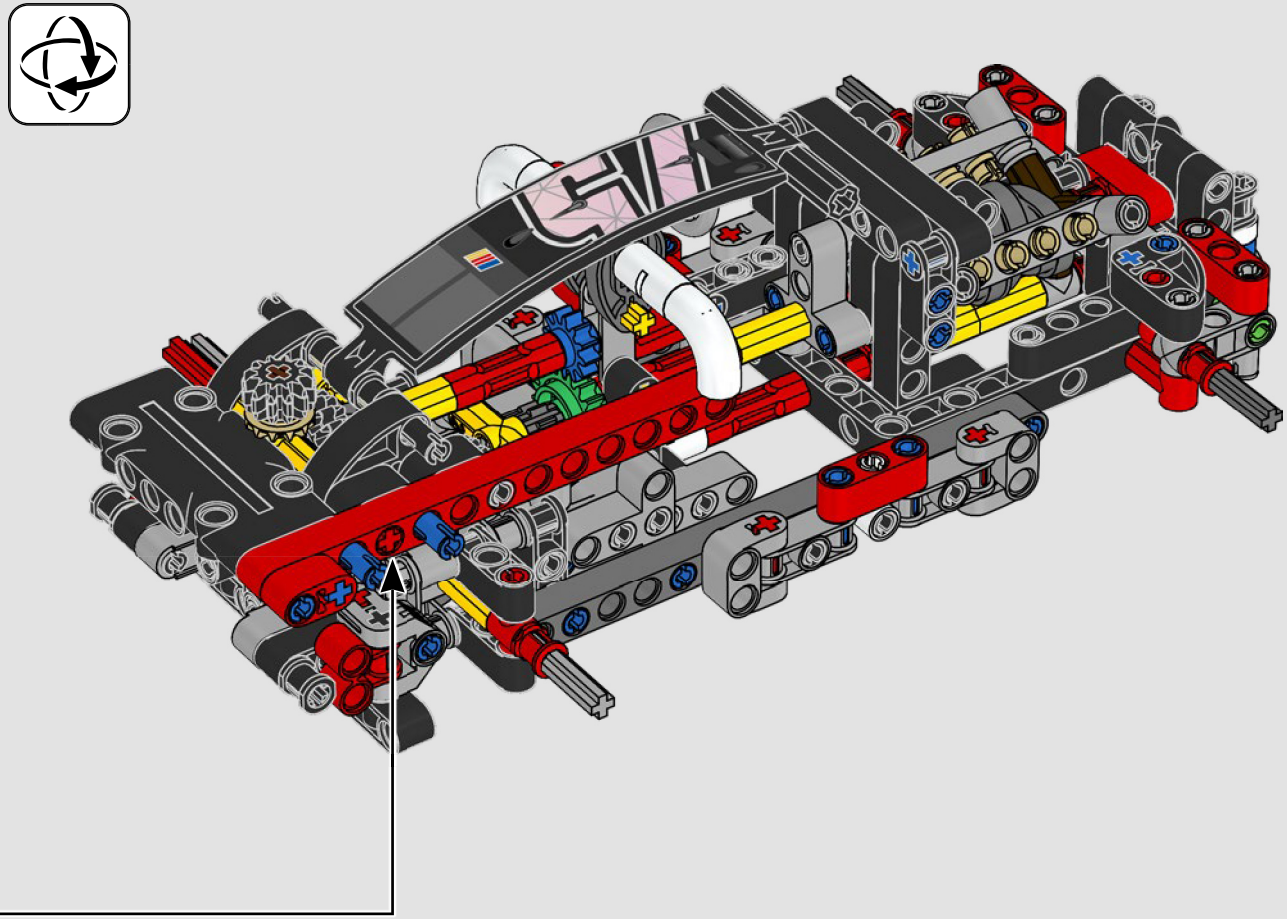

90

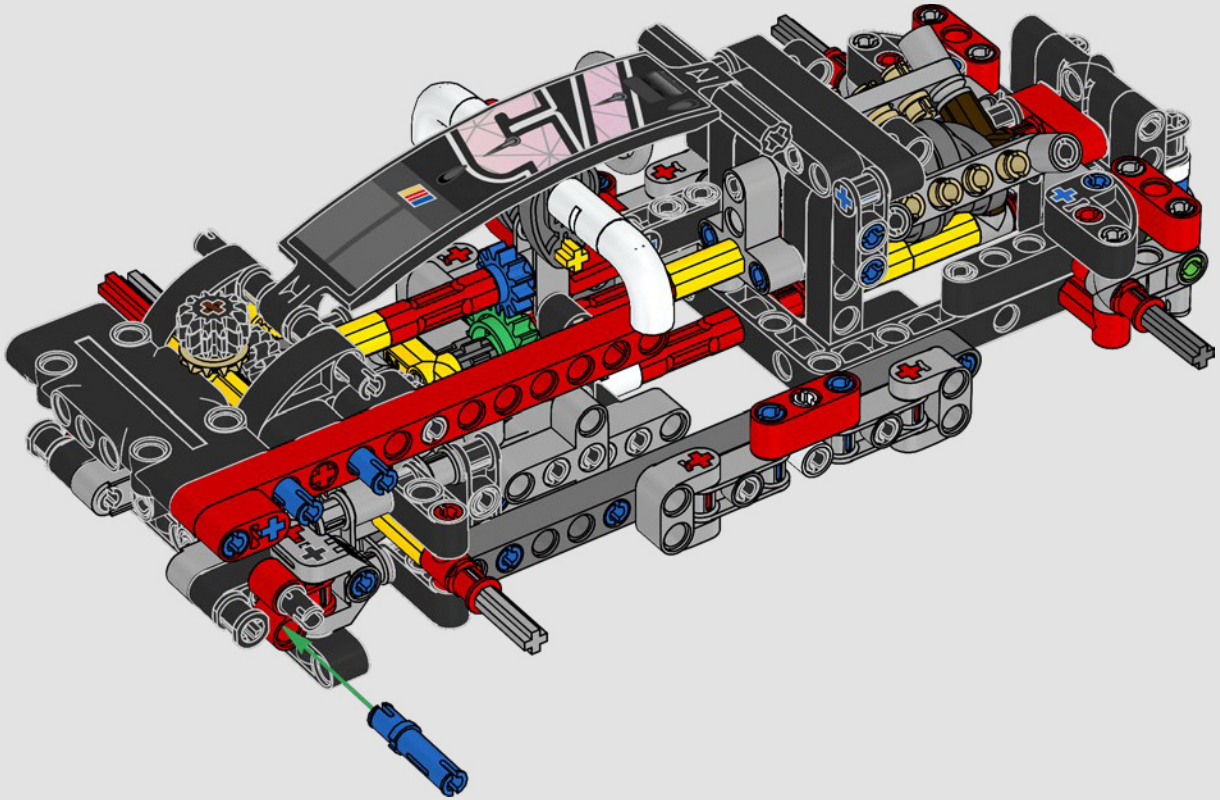

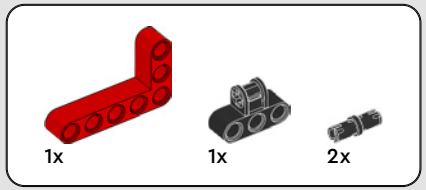

91

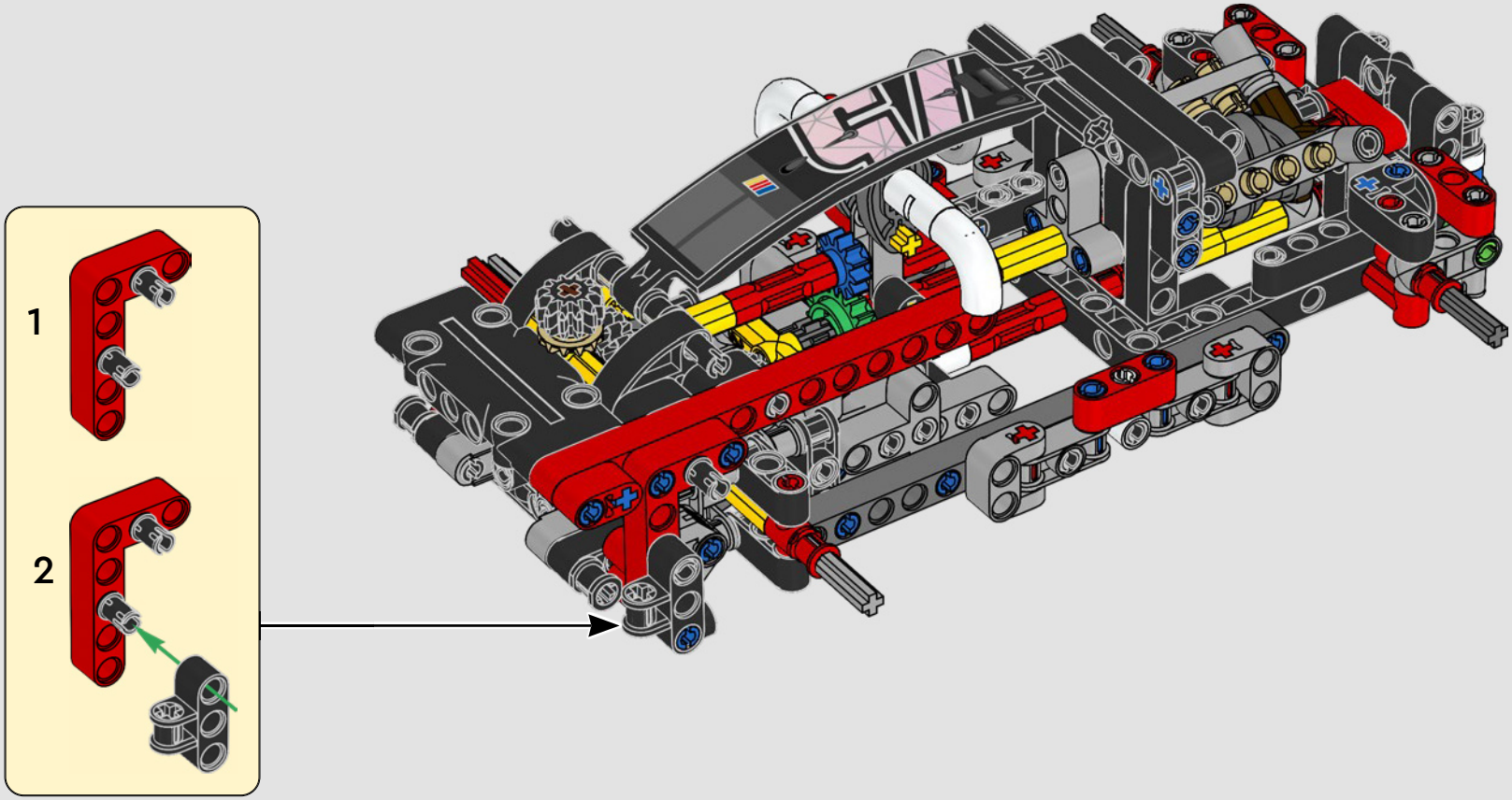

1x

92

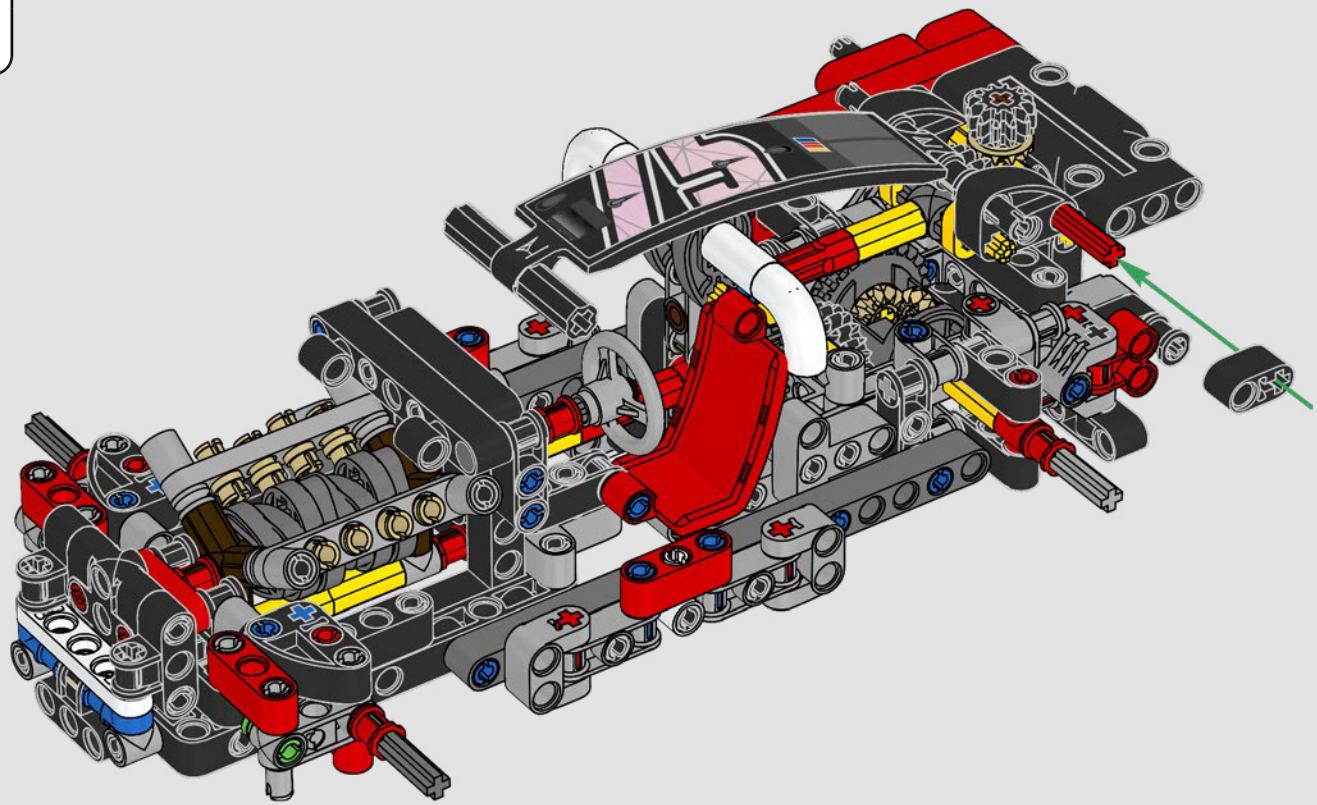

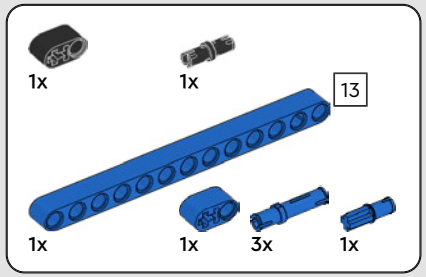

93

1

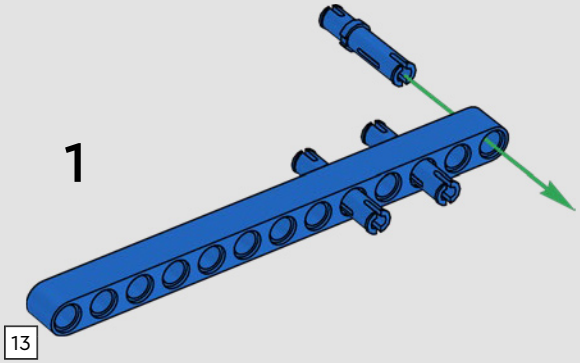

2

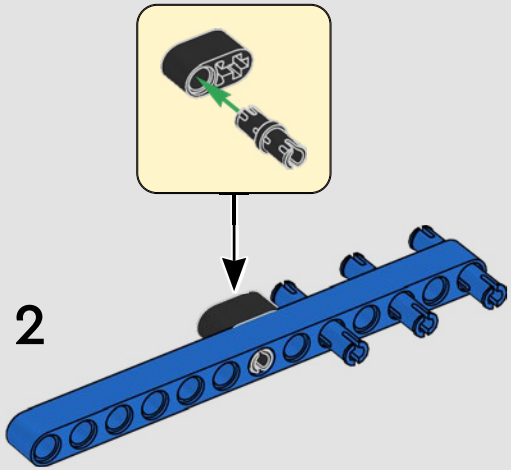

3

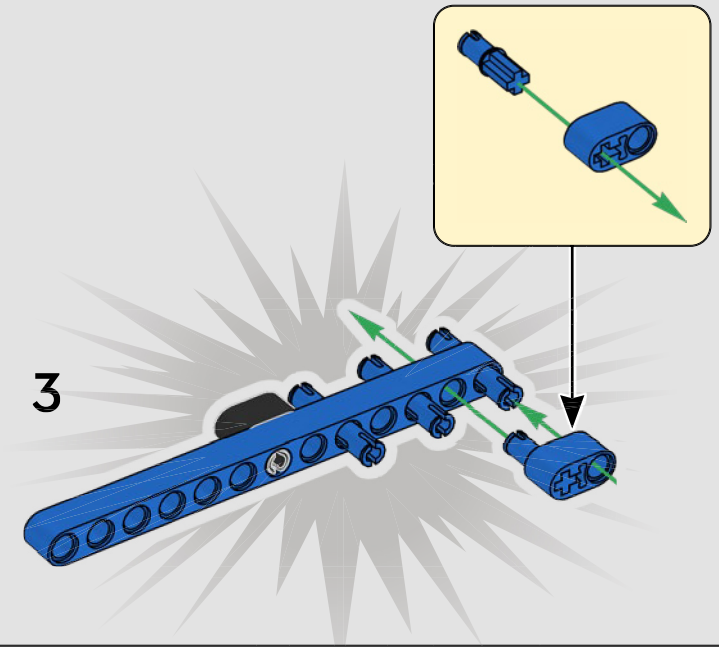

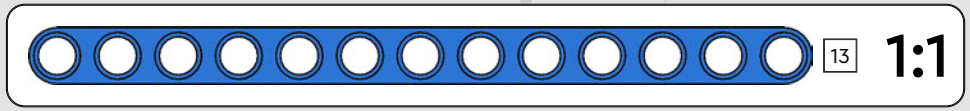

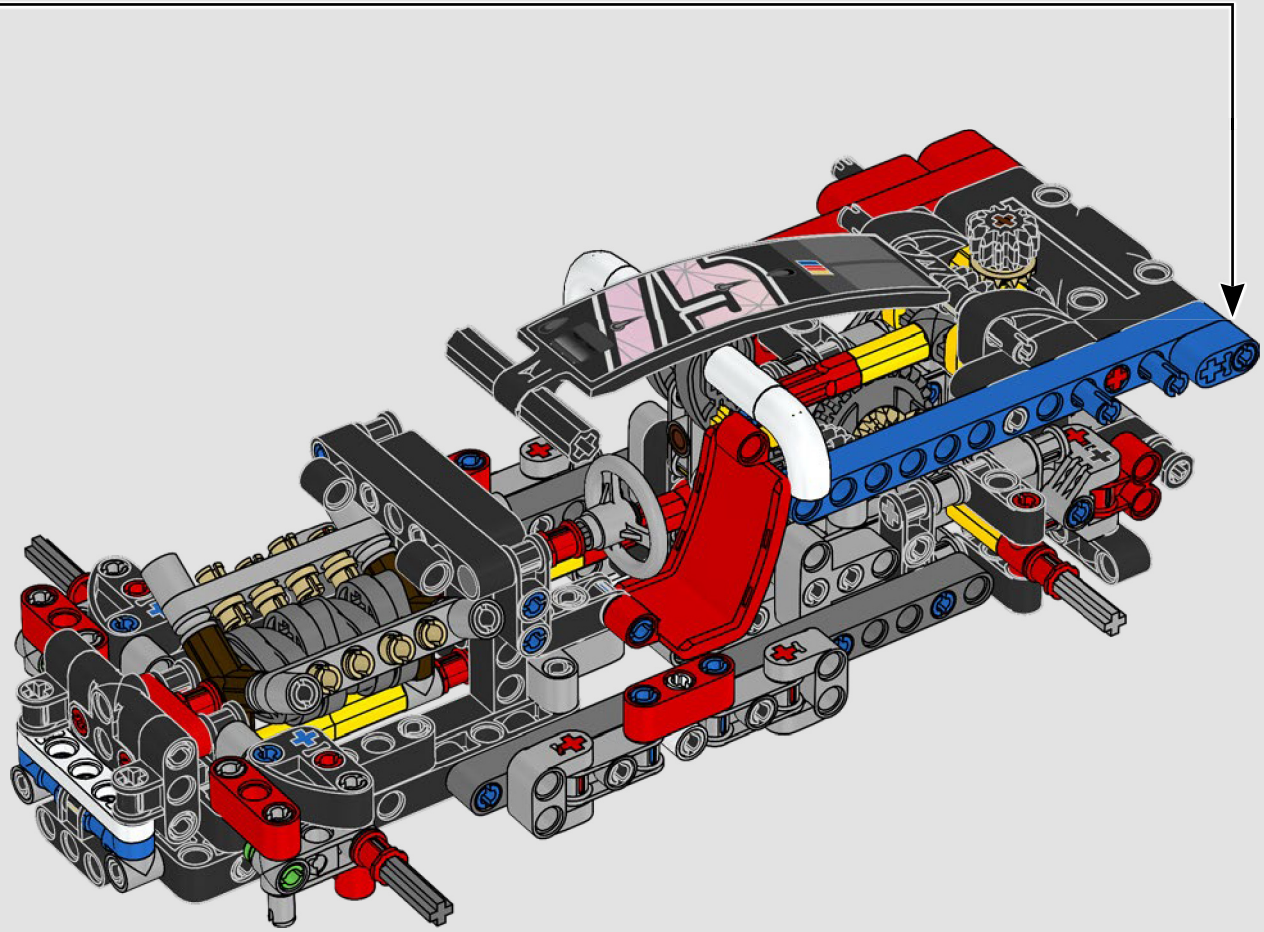

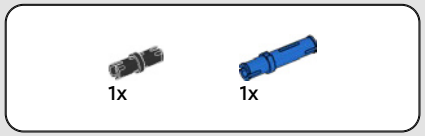

94

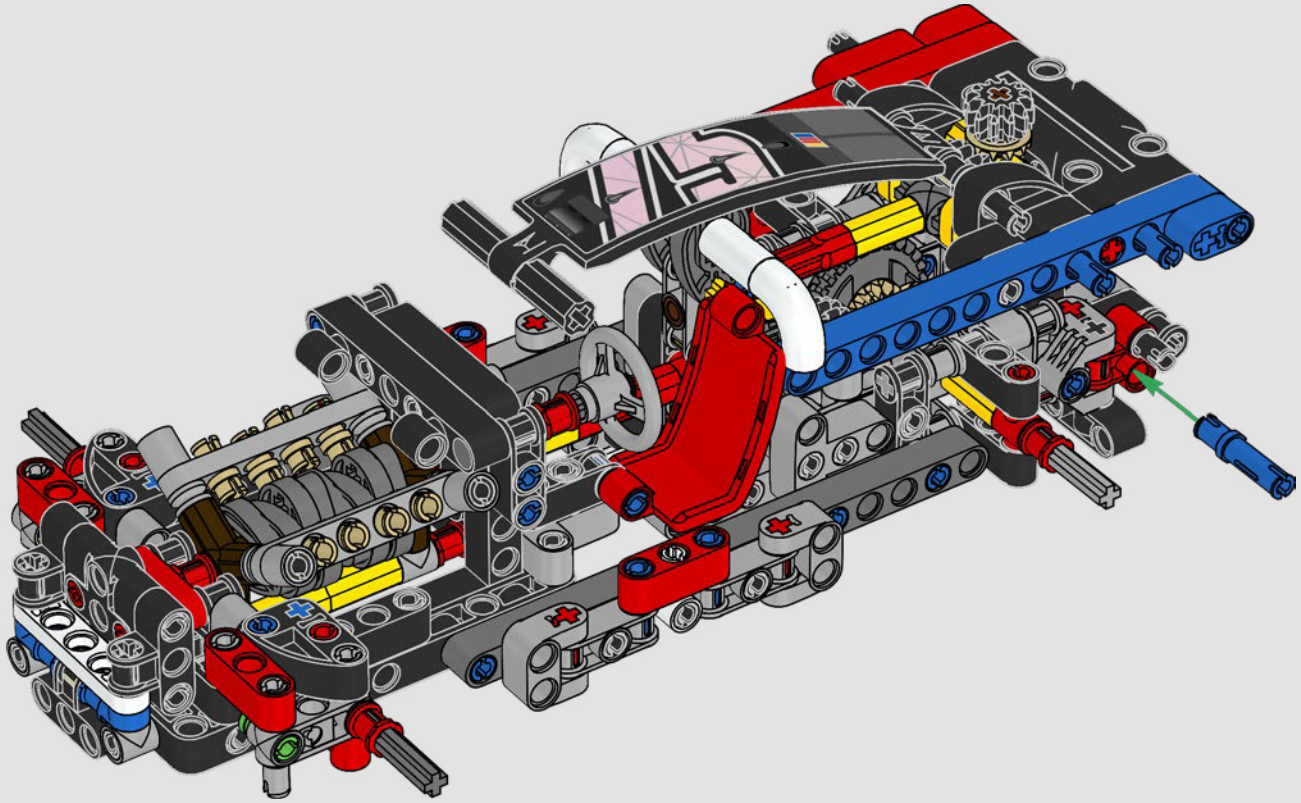

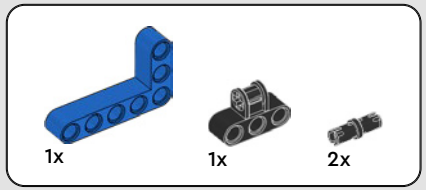

95

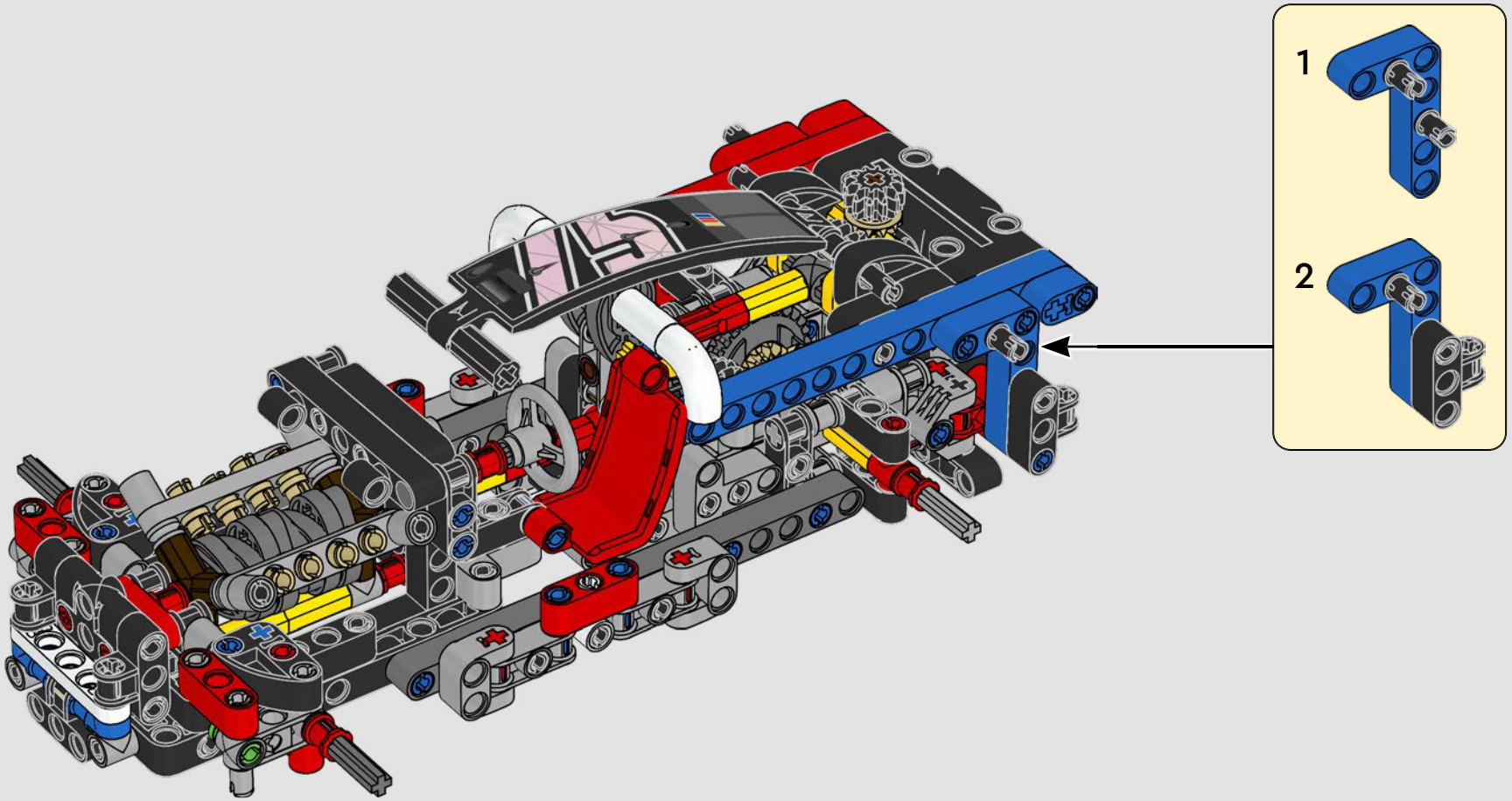

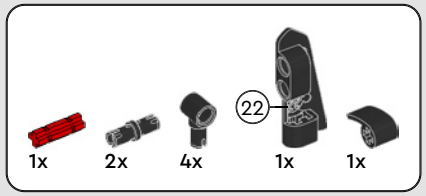

96

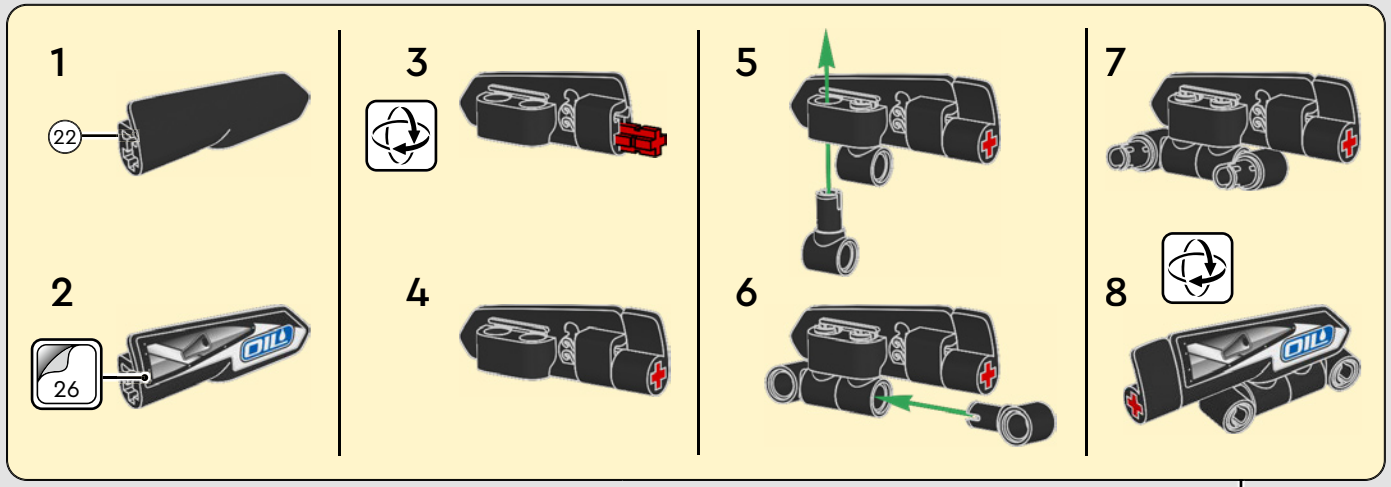

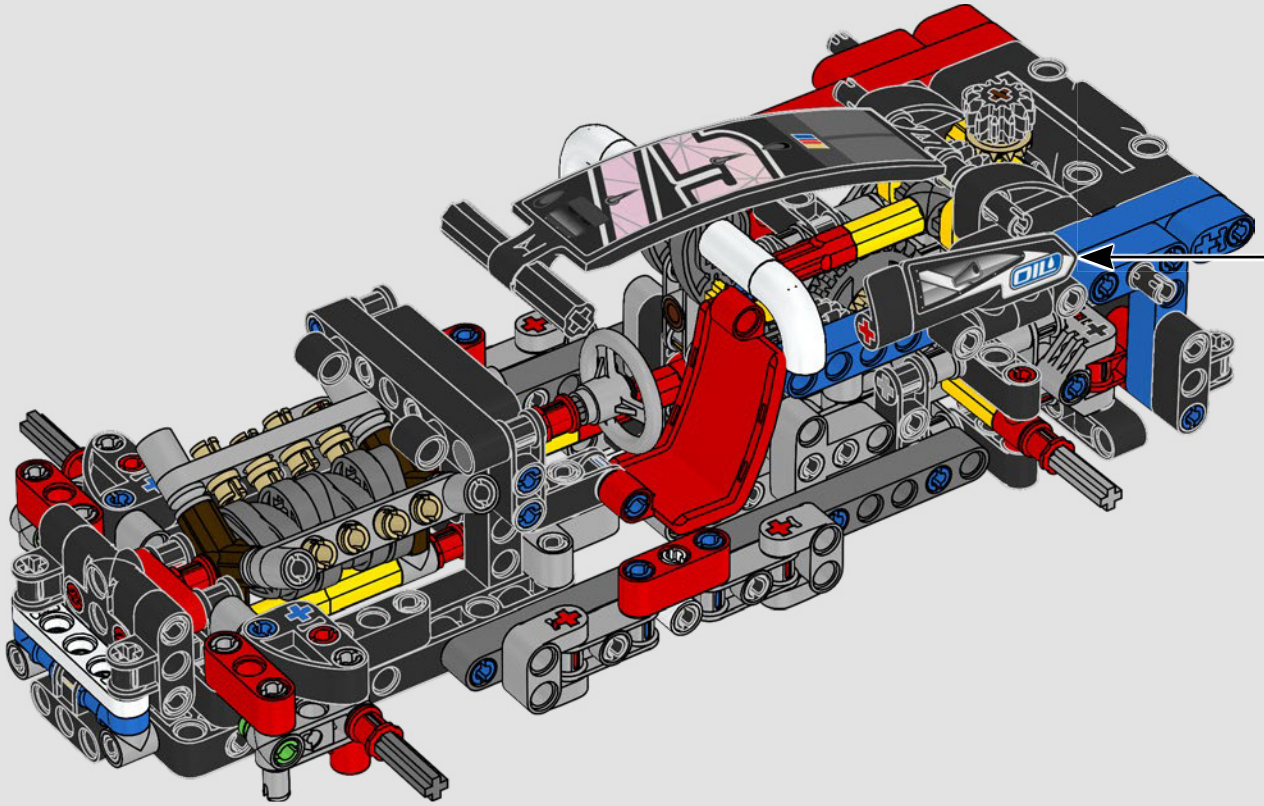

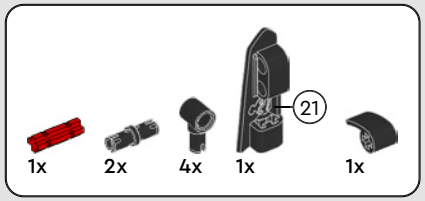

97

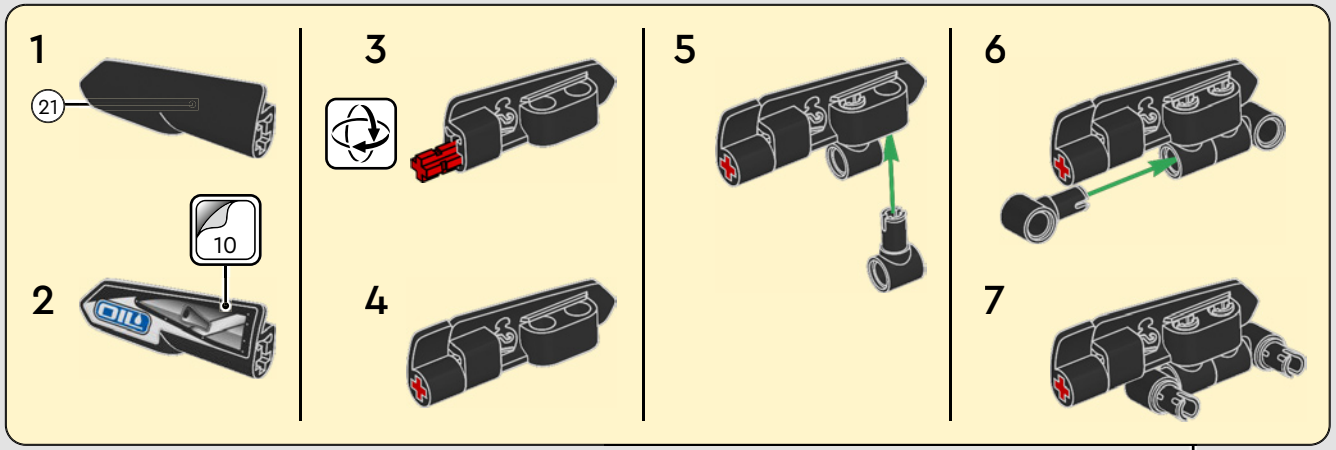

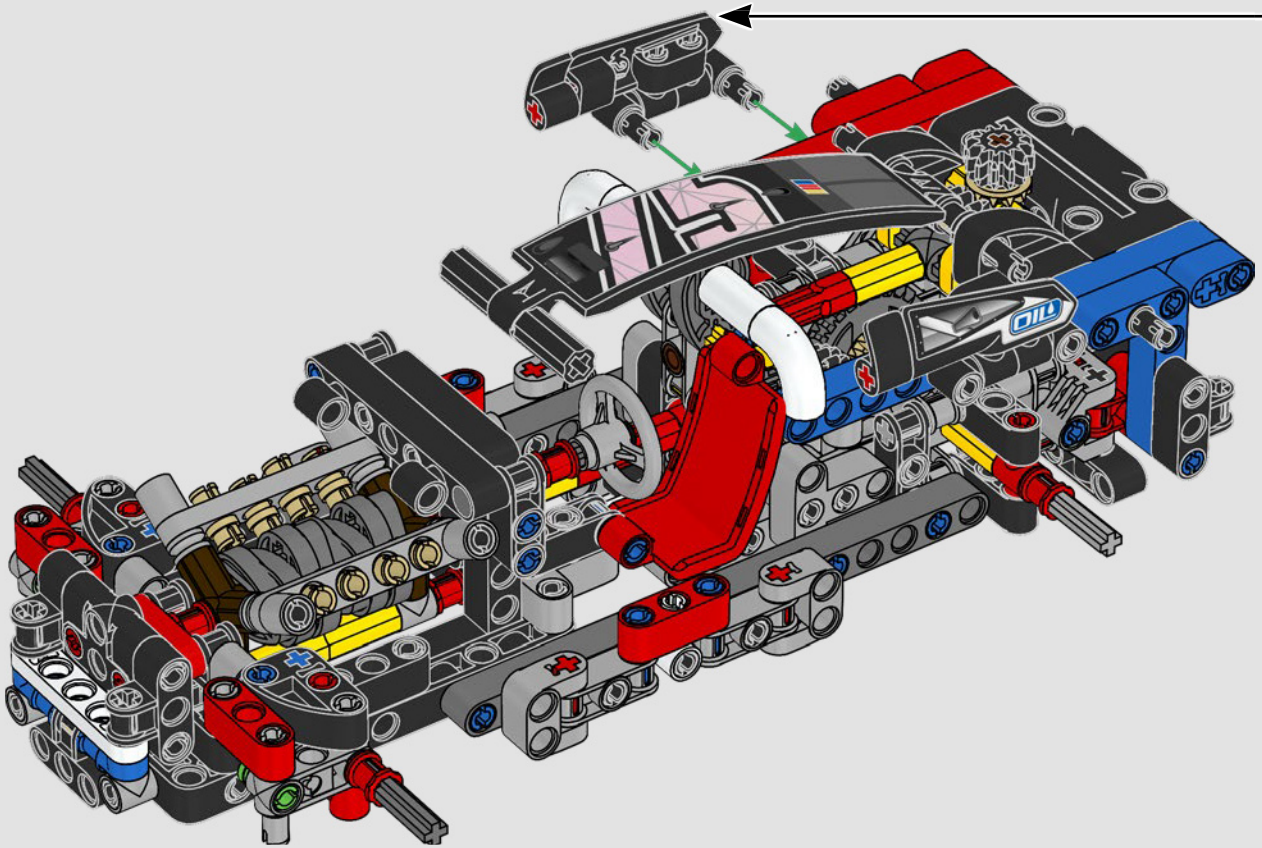

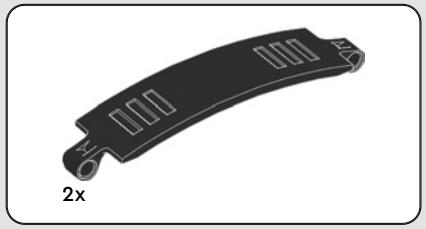

98

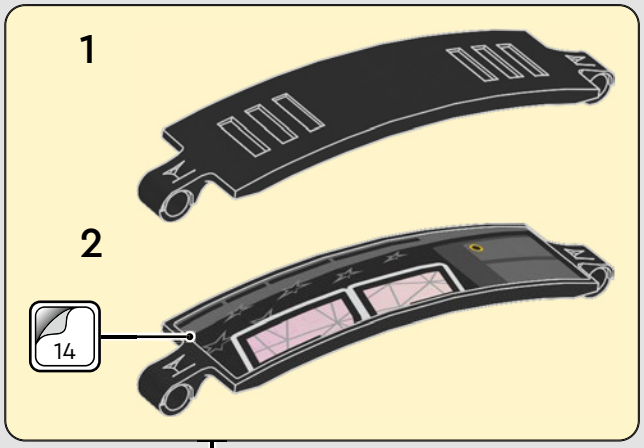

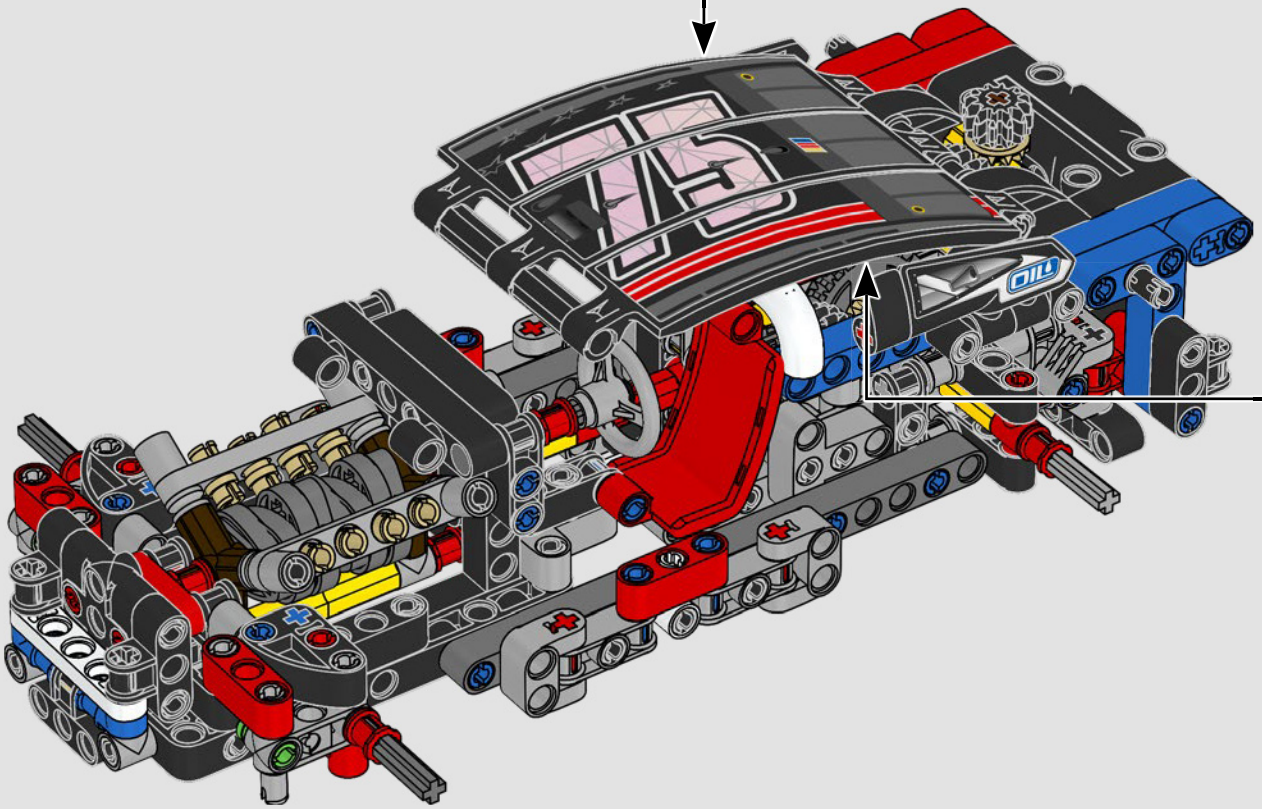

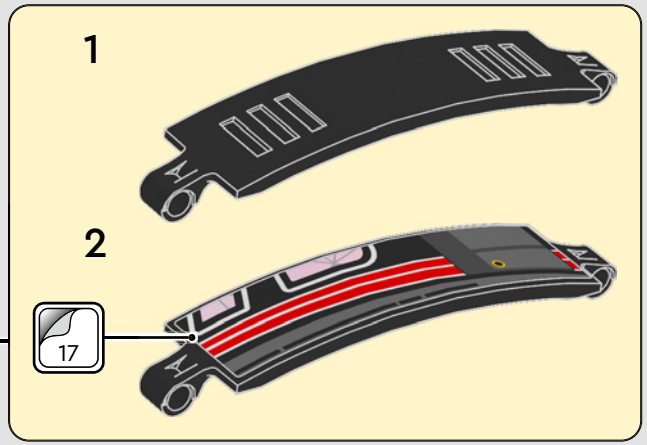

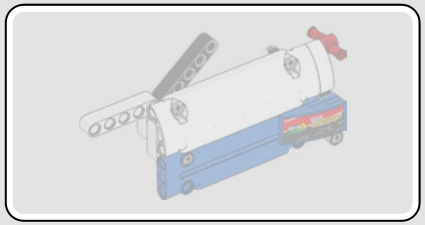

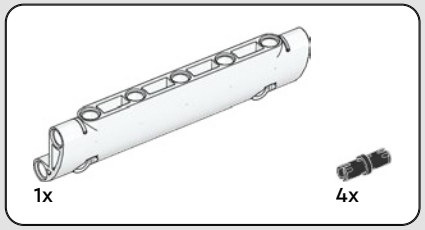

99

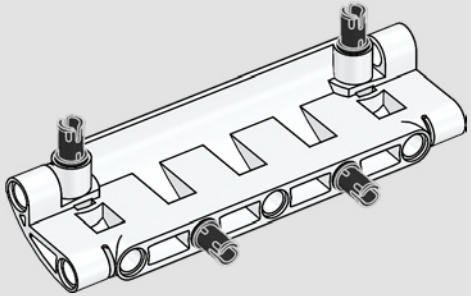

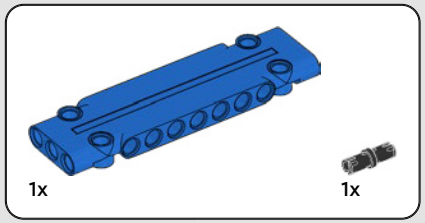

100

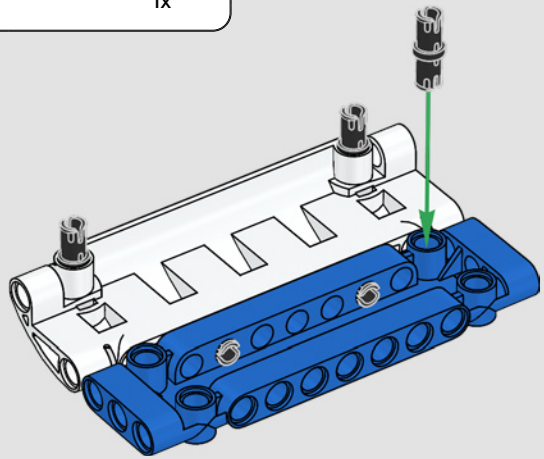

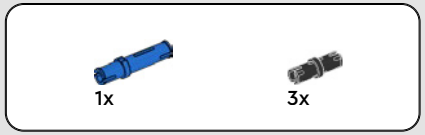

101

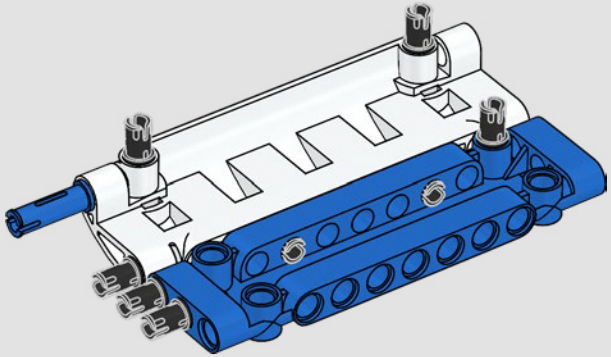

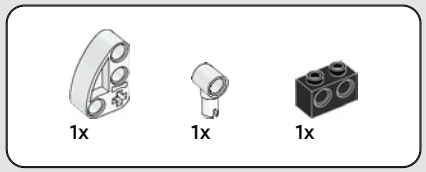

102

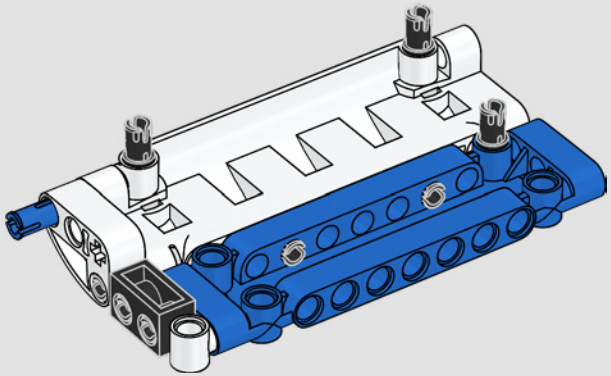

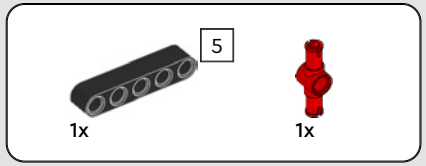

103

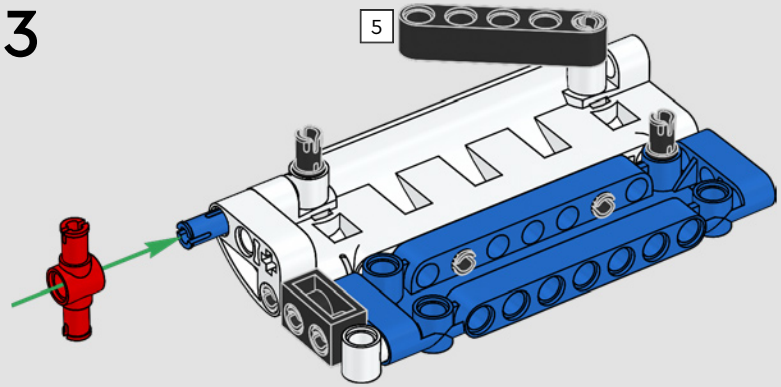

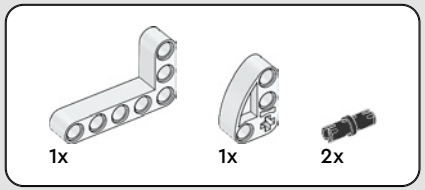

104

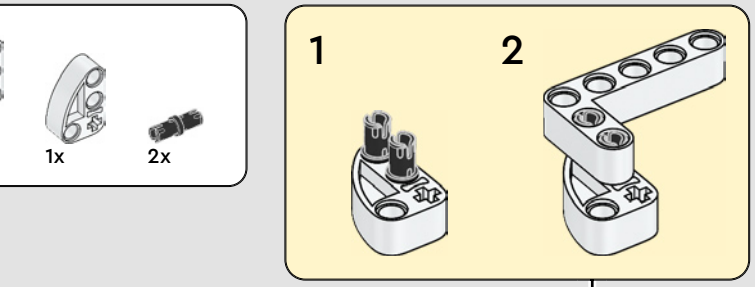

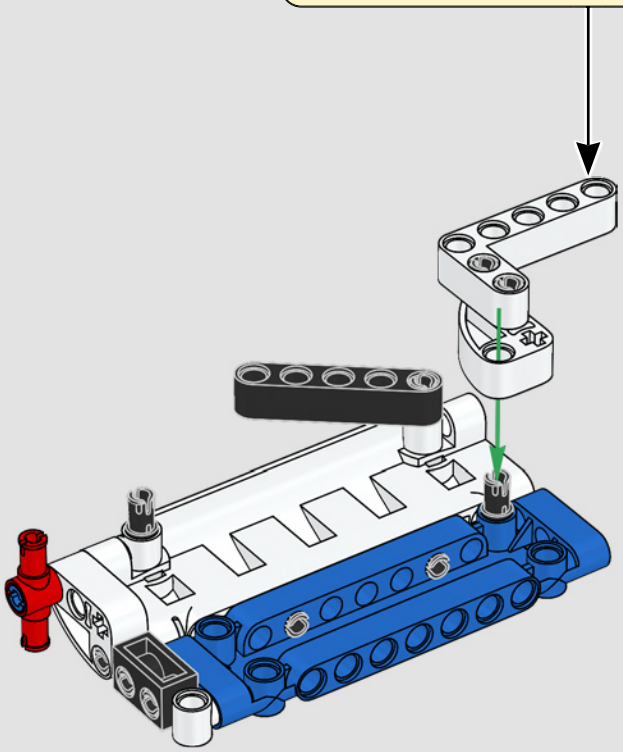

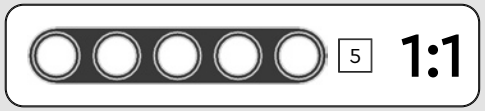

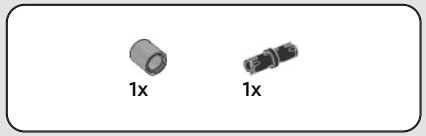

105

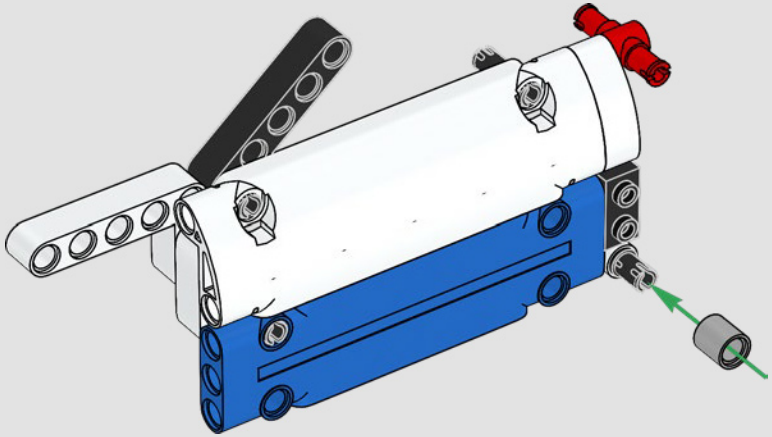

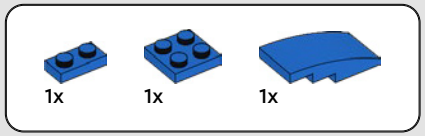

106

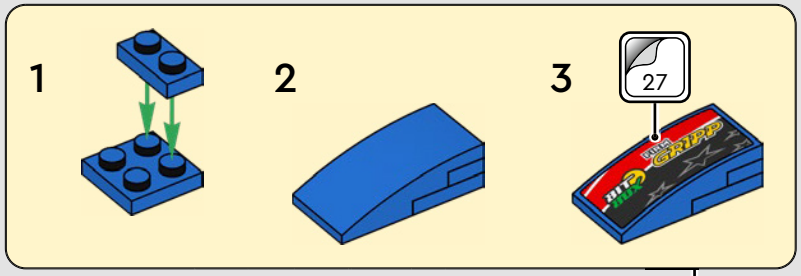

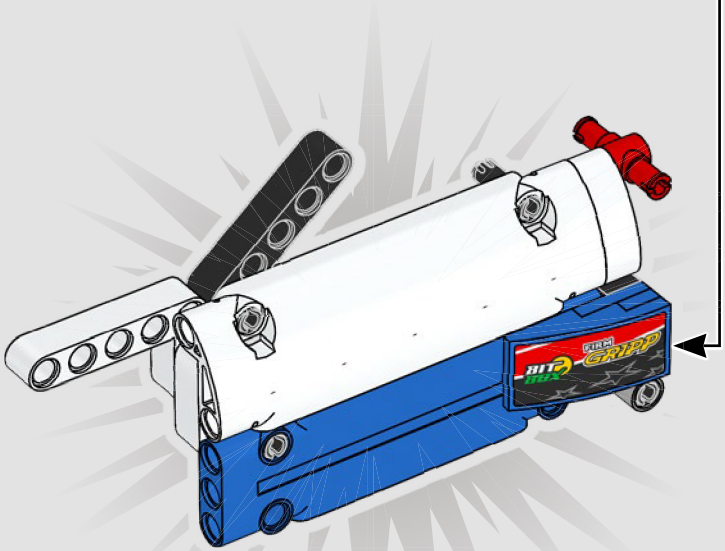

107

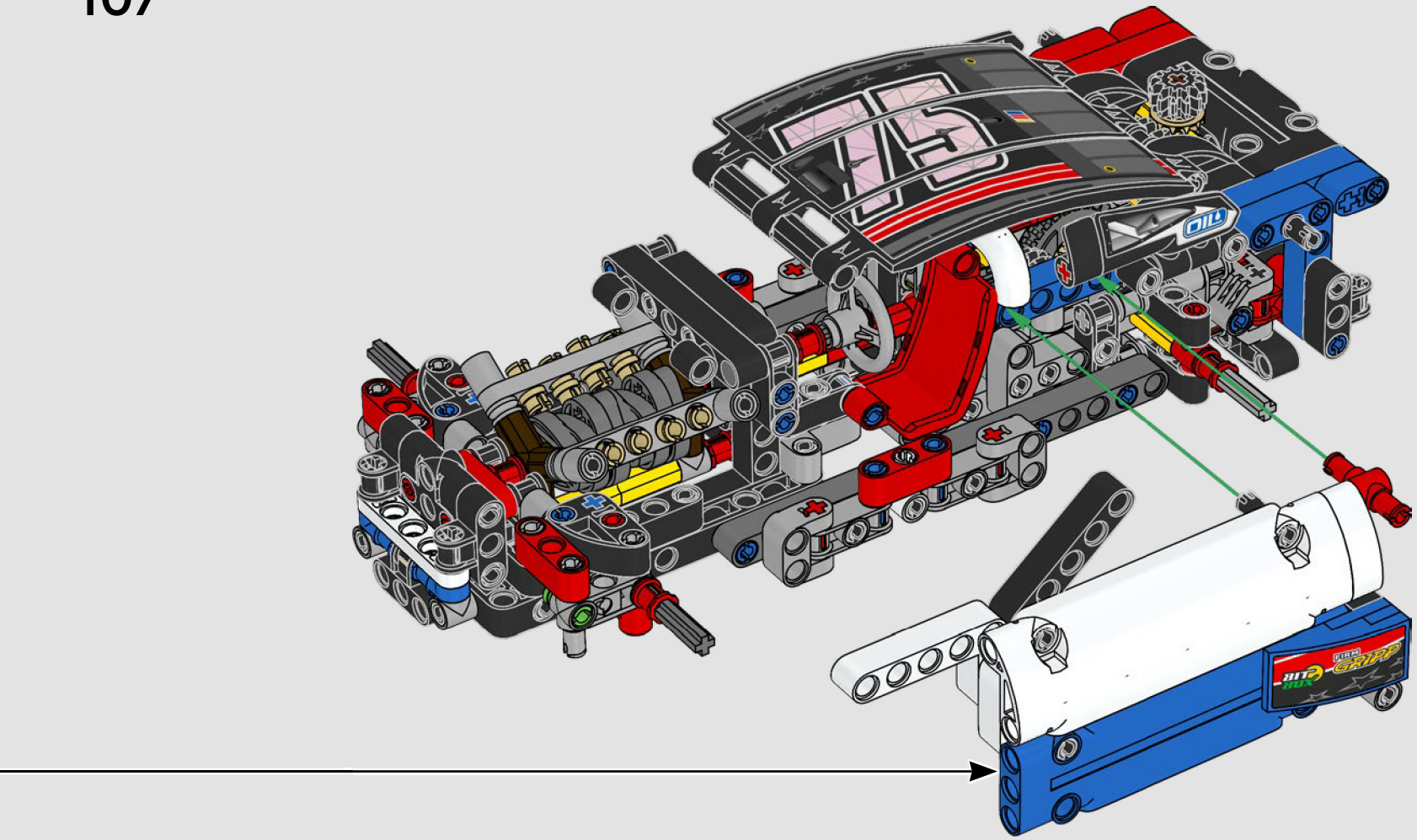

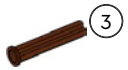

108

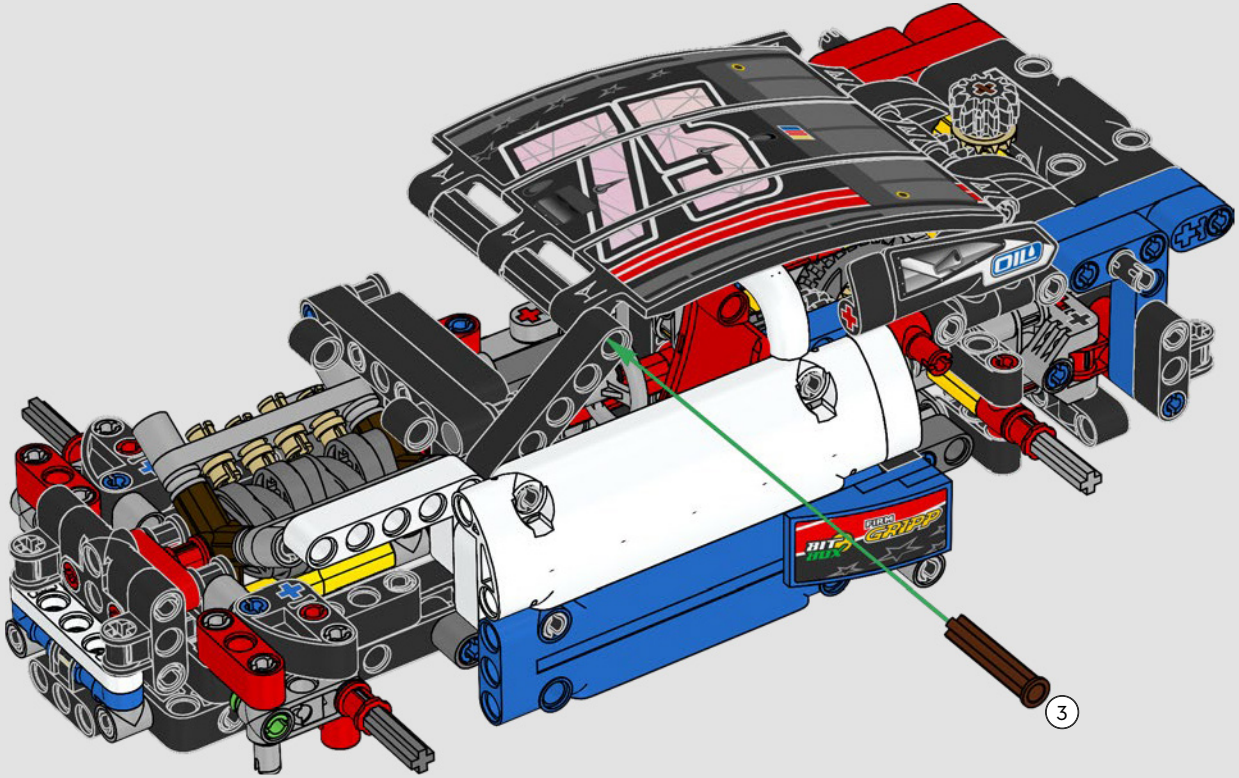

1:1

2x

109

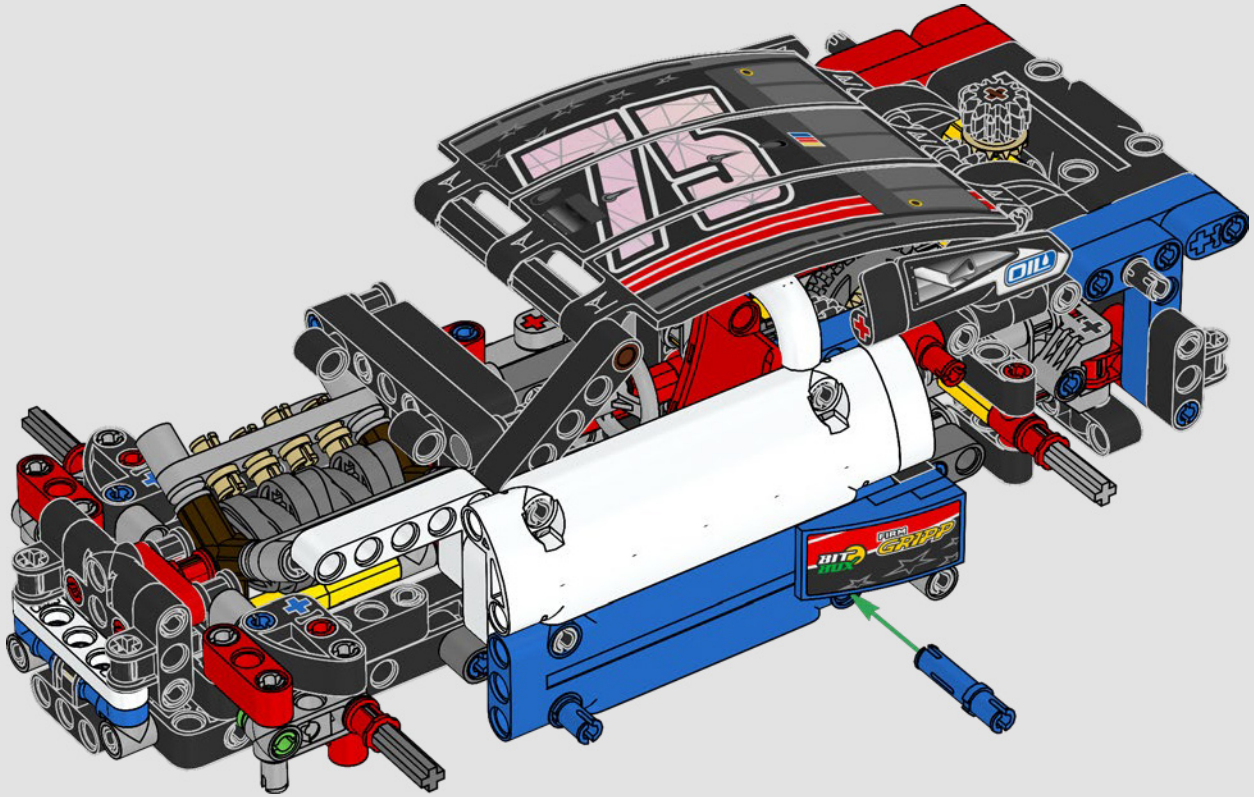

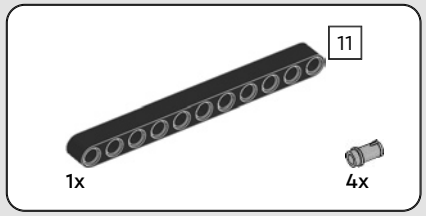

110

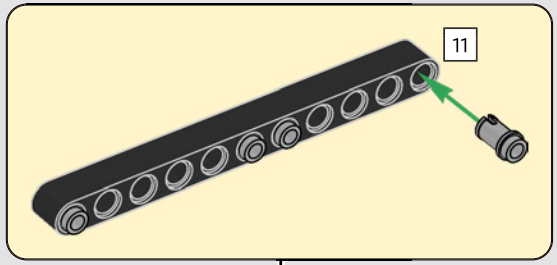

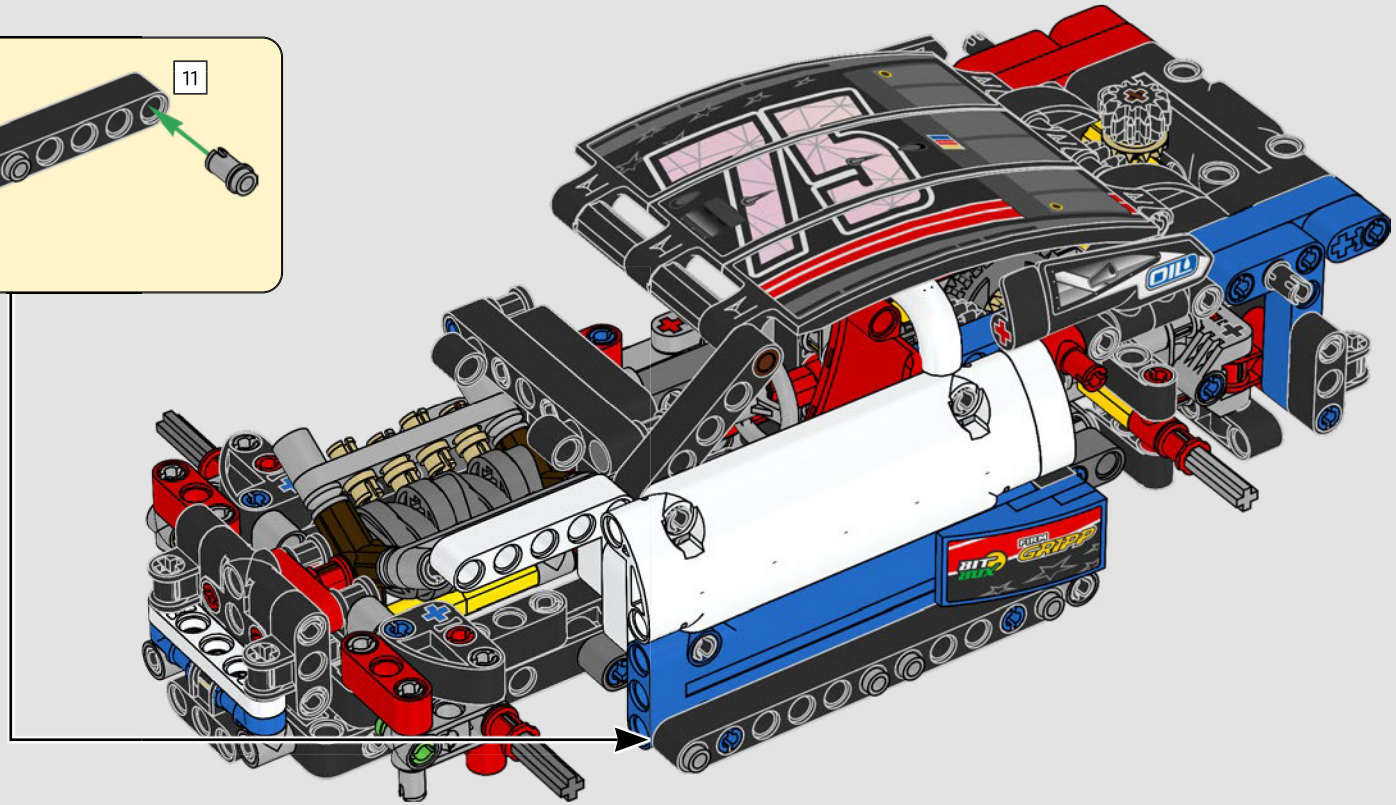

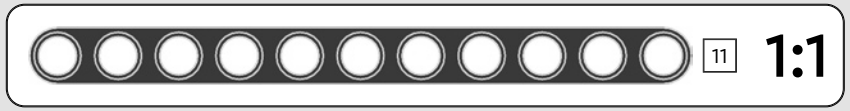

111

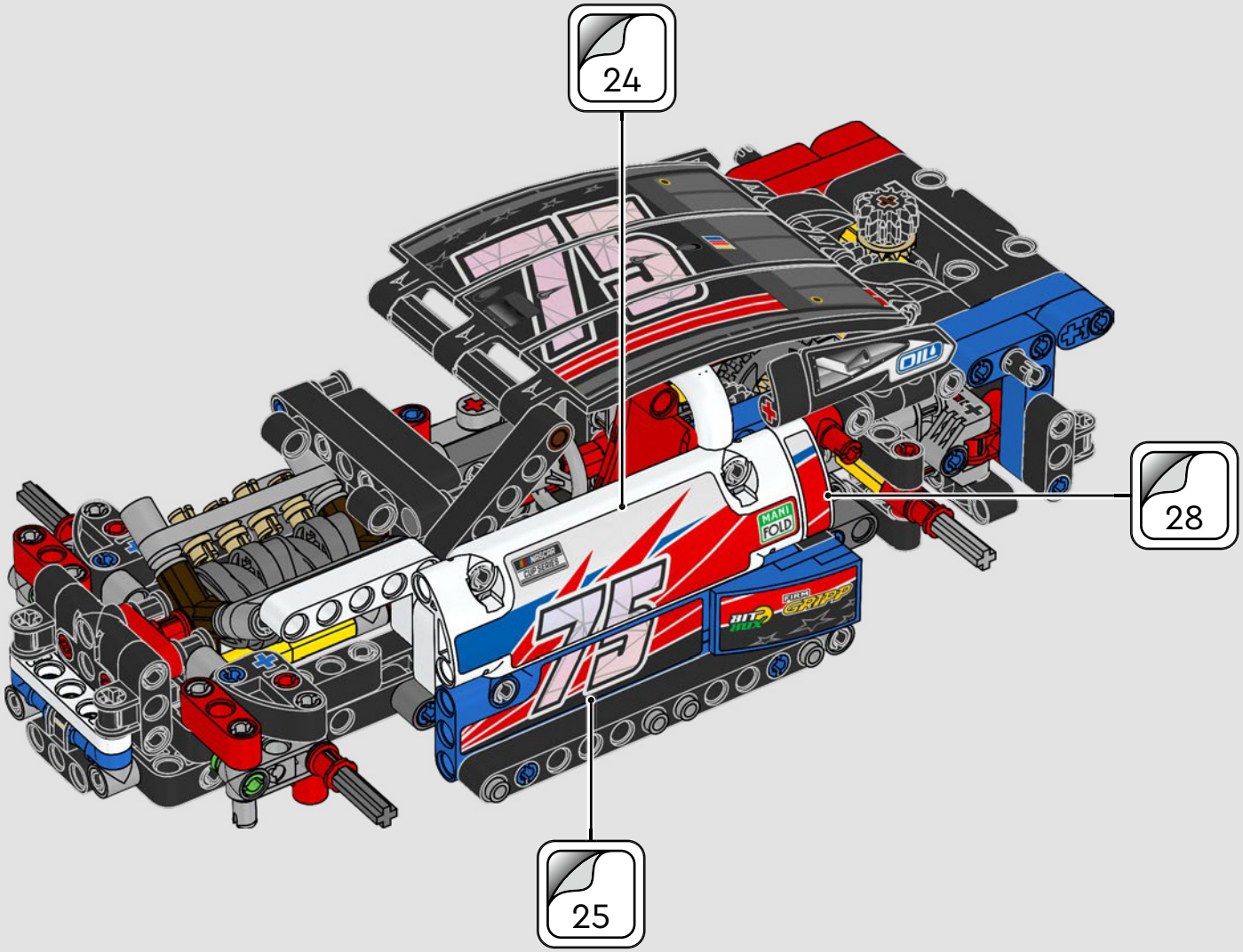

1x

112

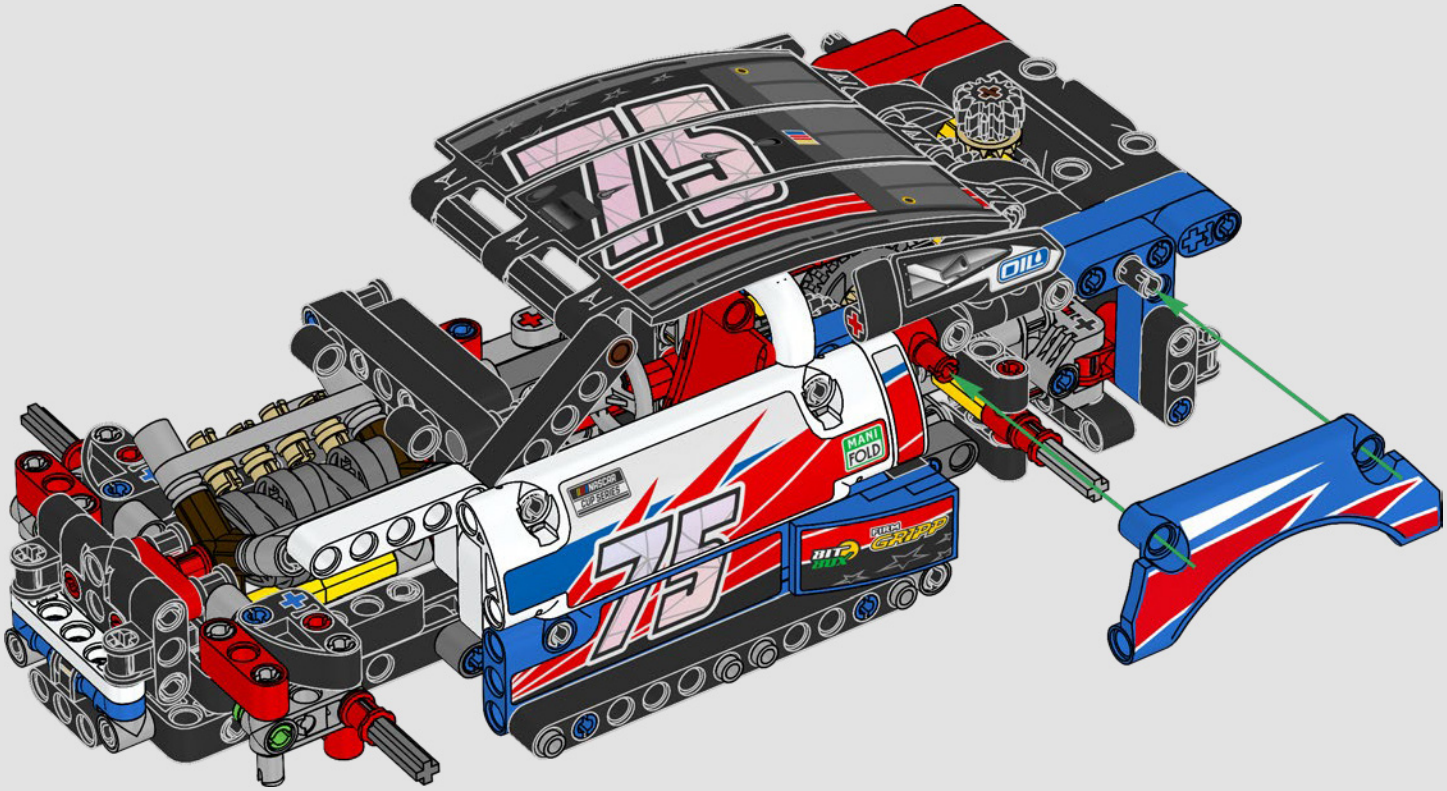

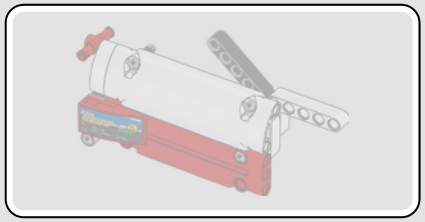

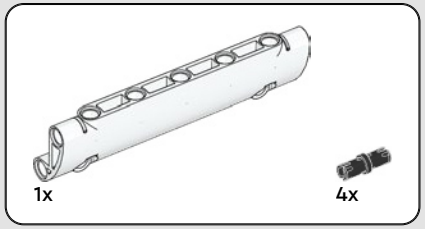

113

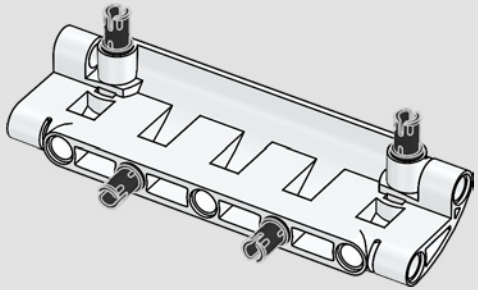

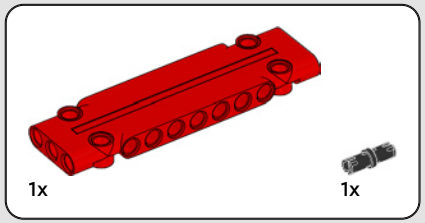

114

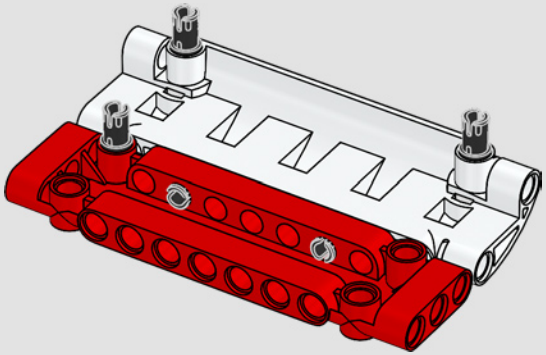

115

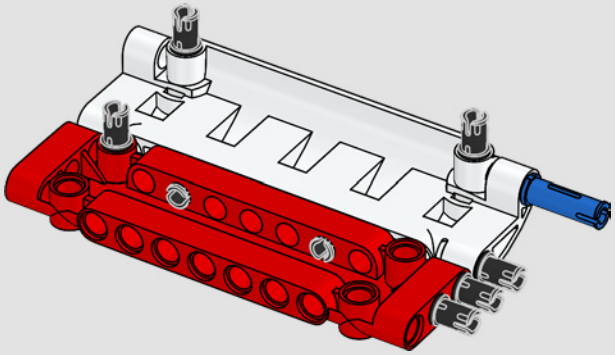

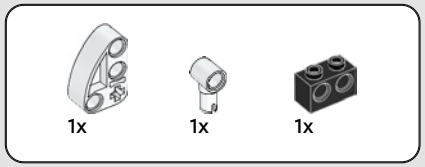

116

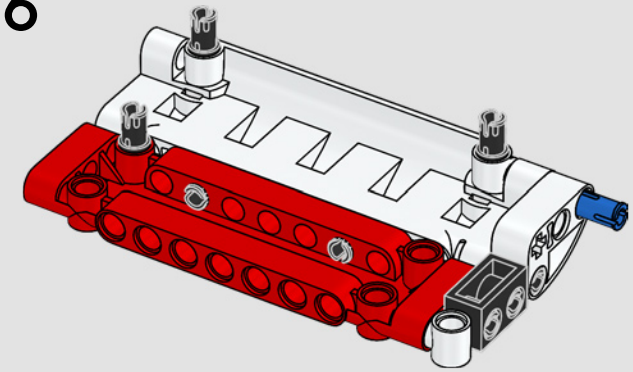

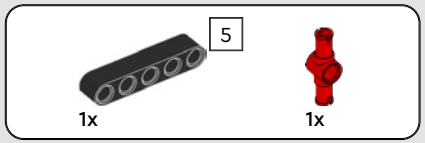

117

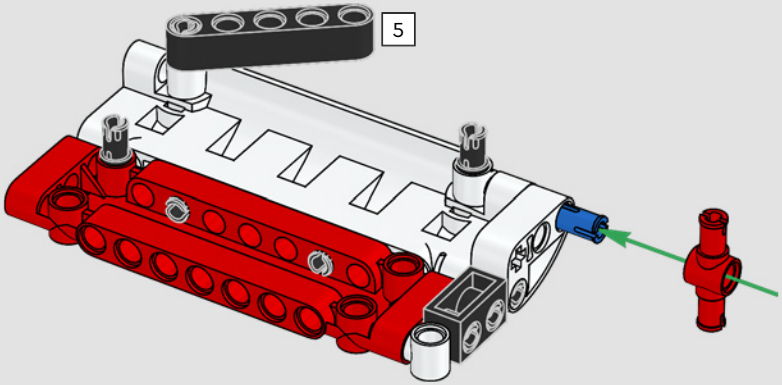

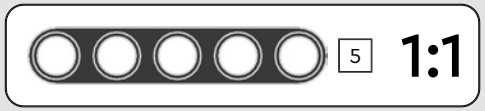

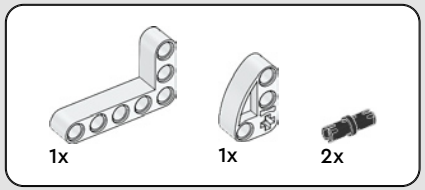

118

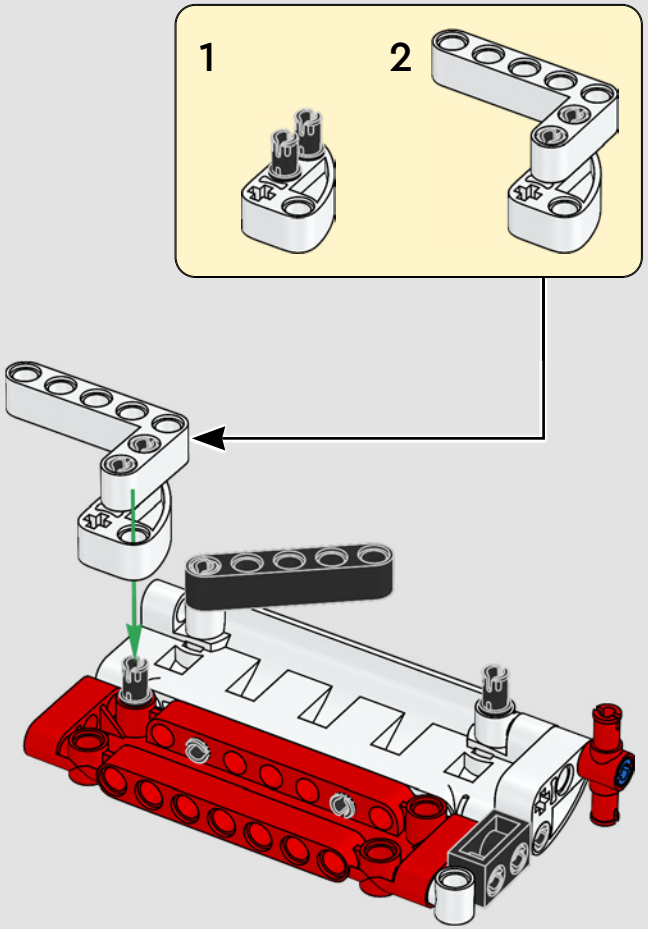

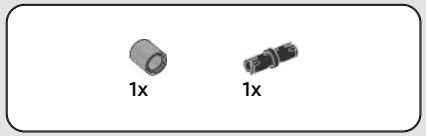

119

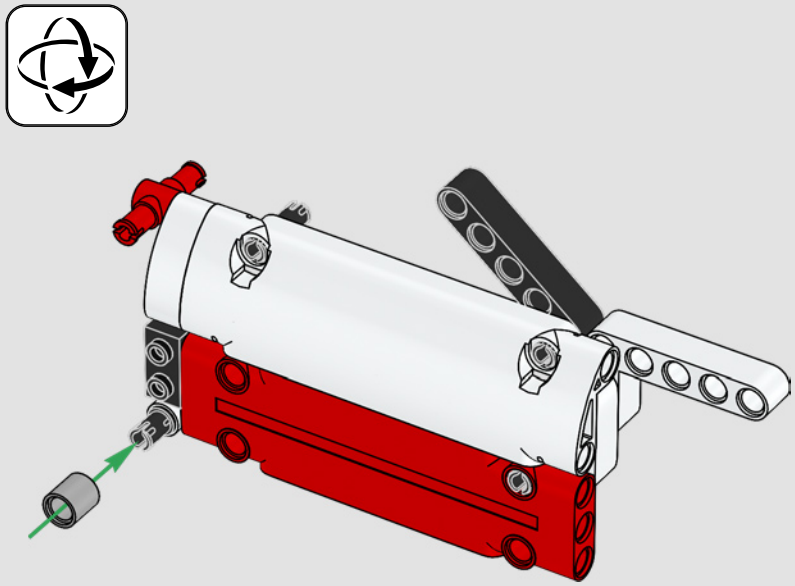

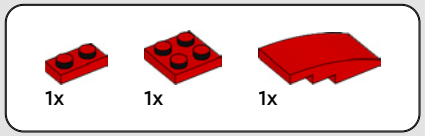

120

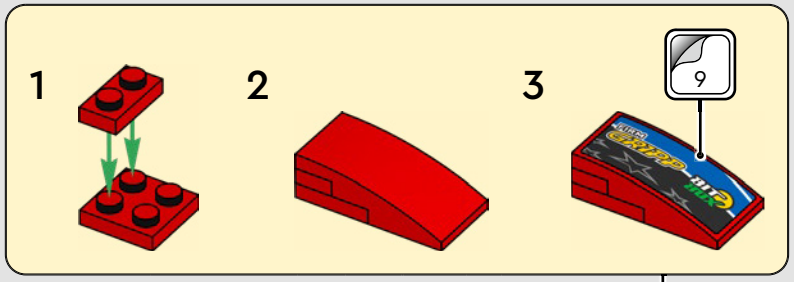

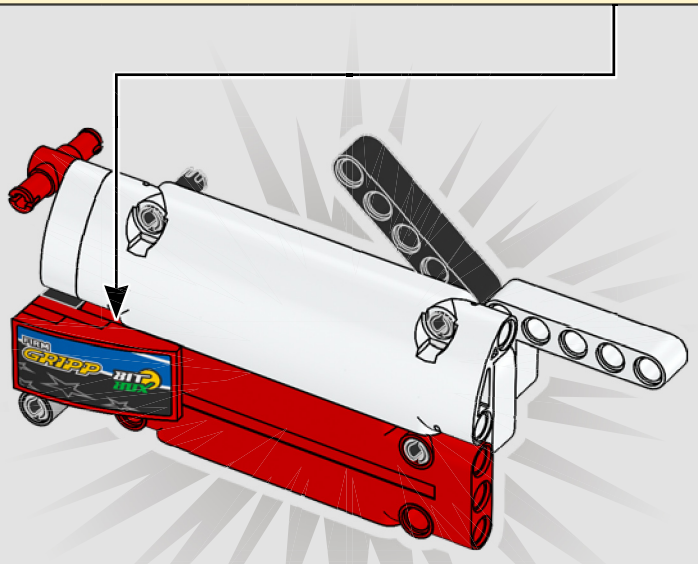

121

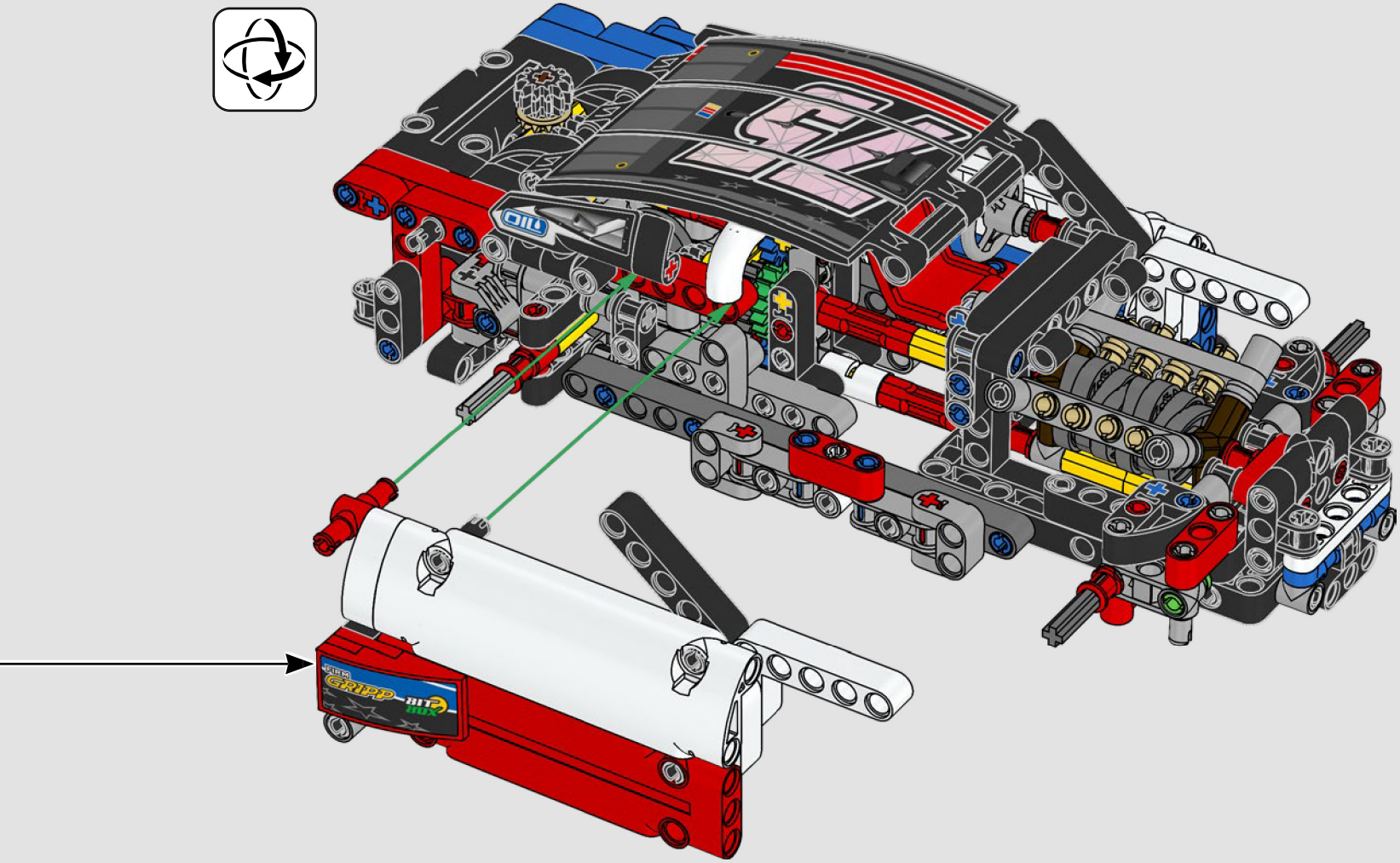

122

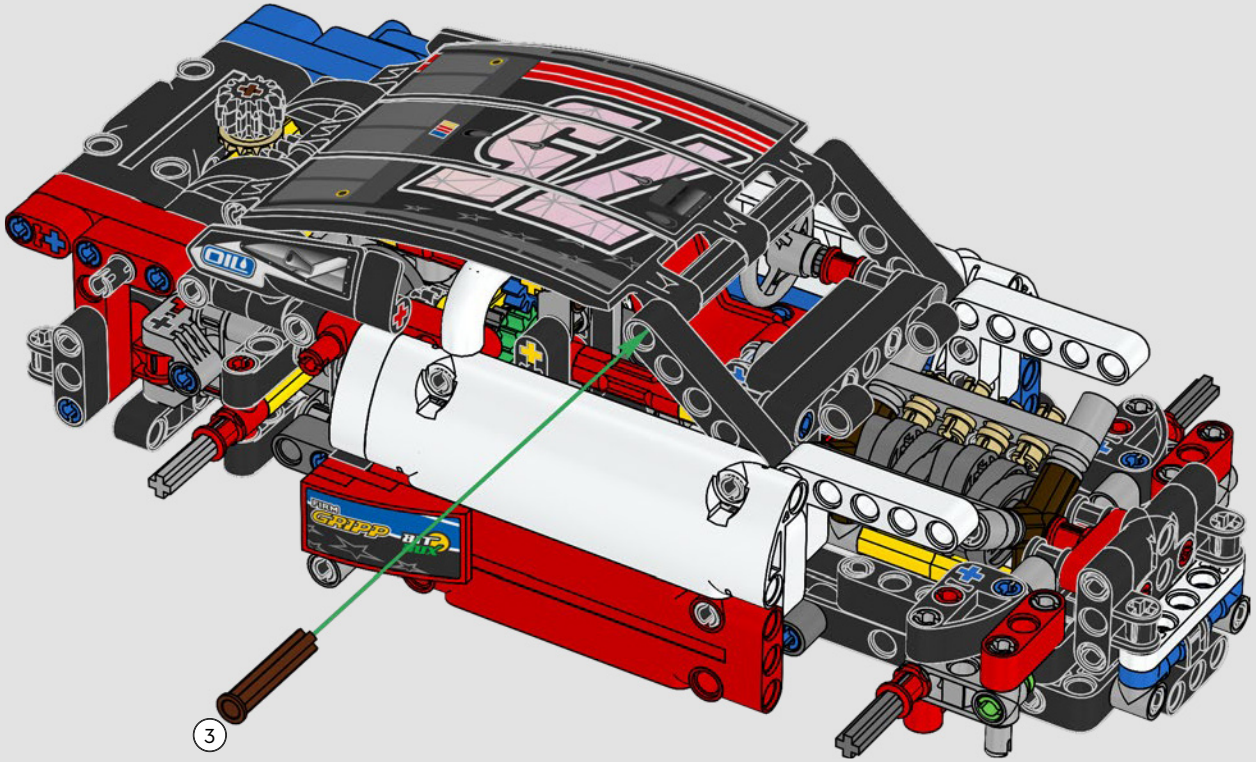

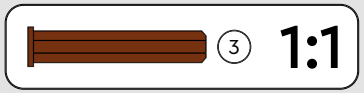

2x

123

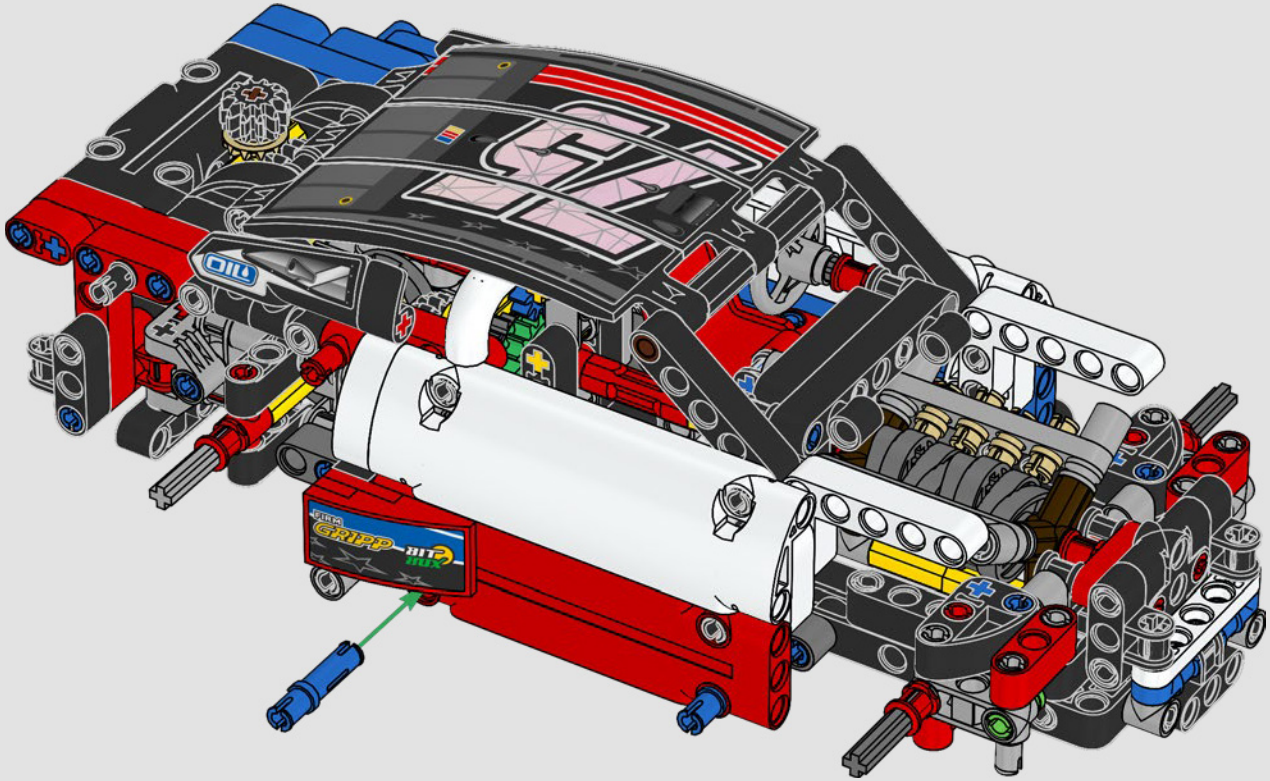

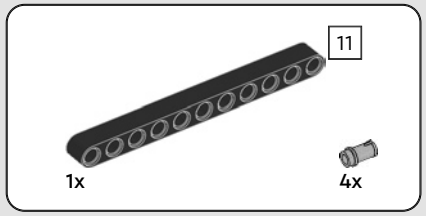

124

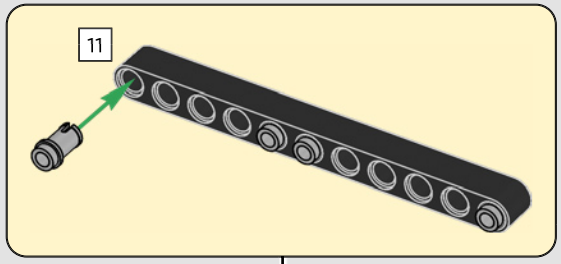

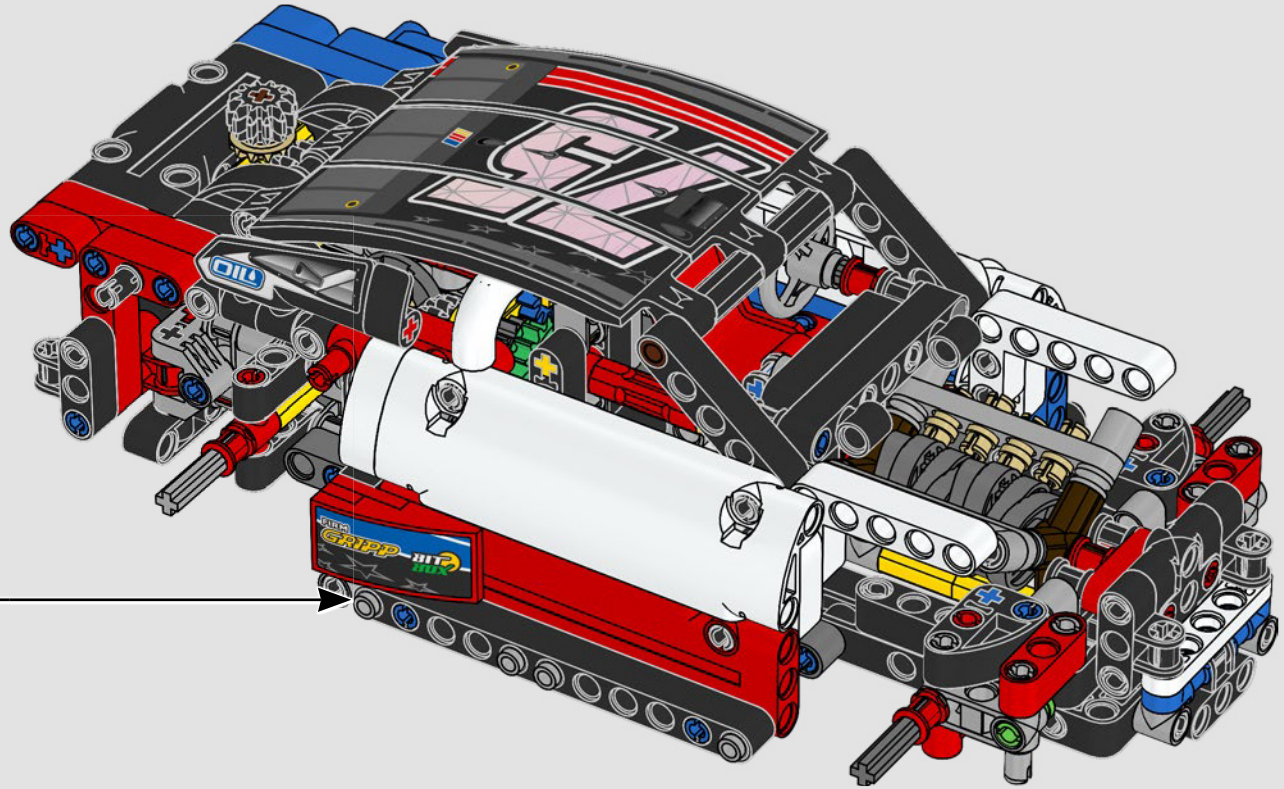

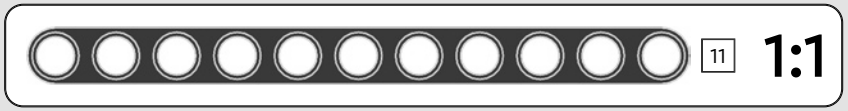

125

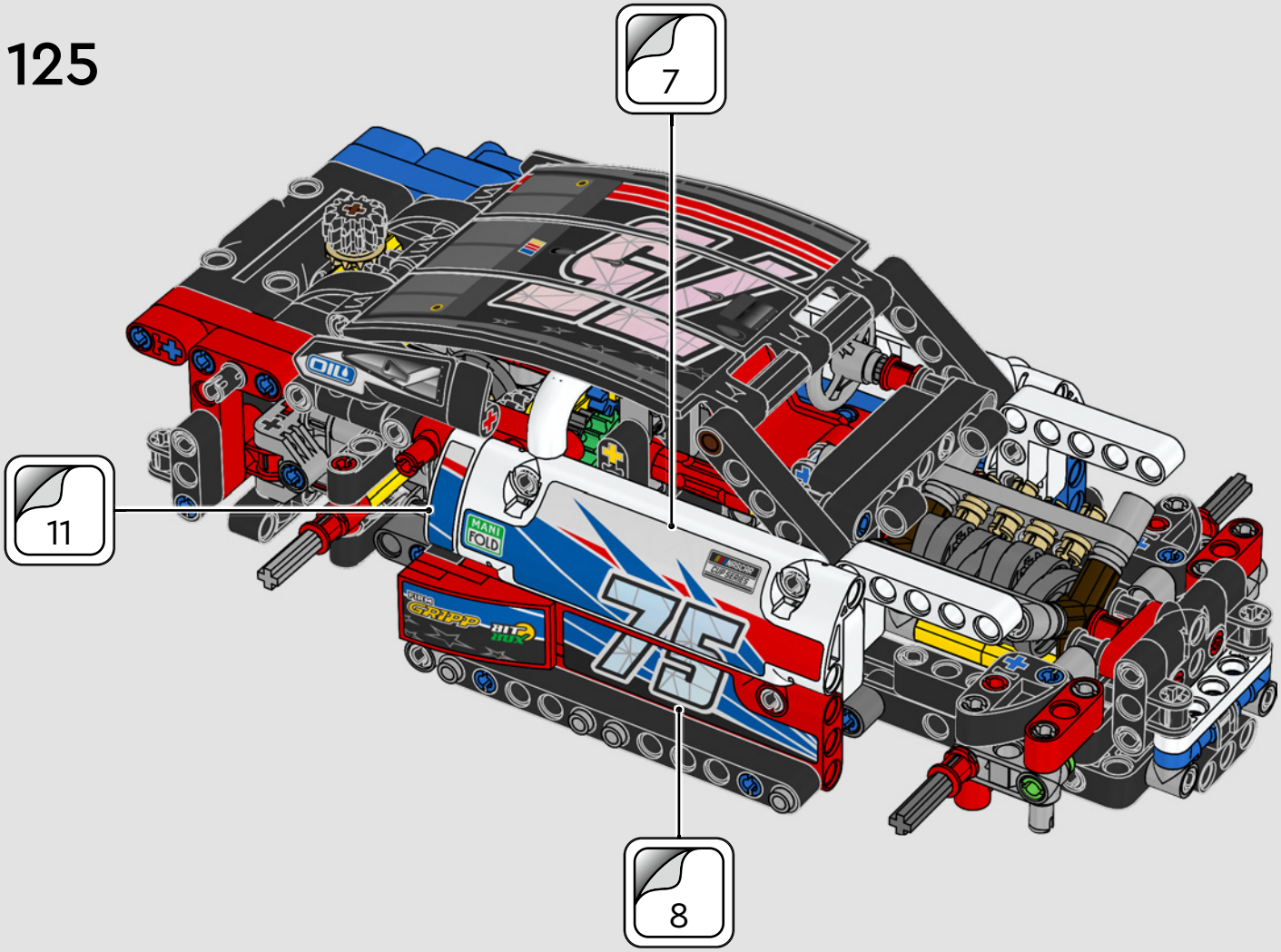

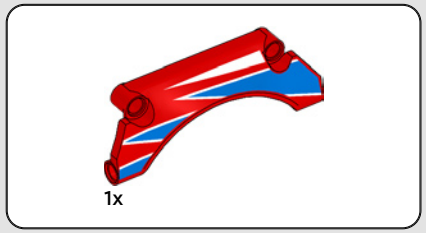

126

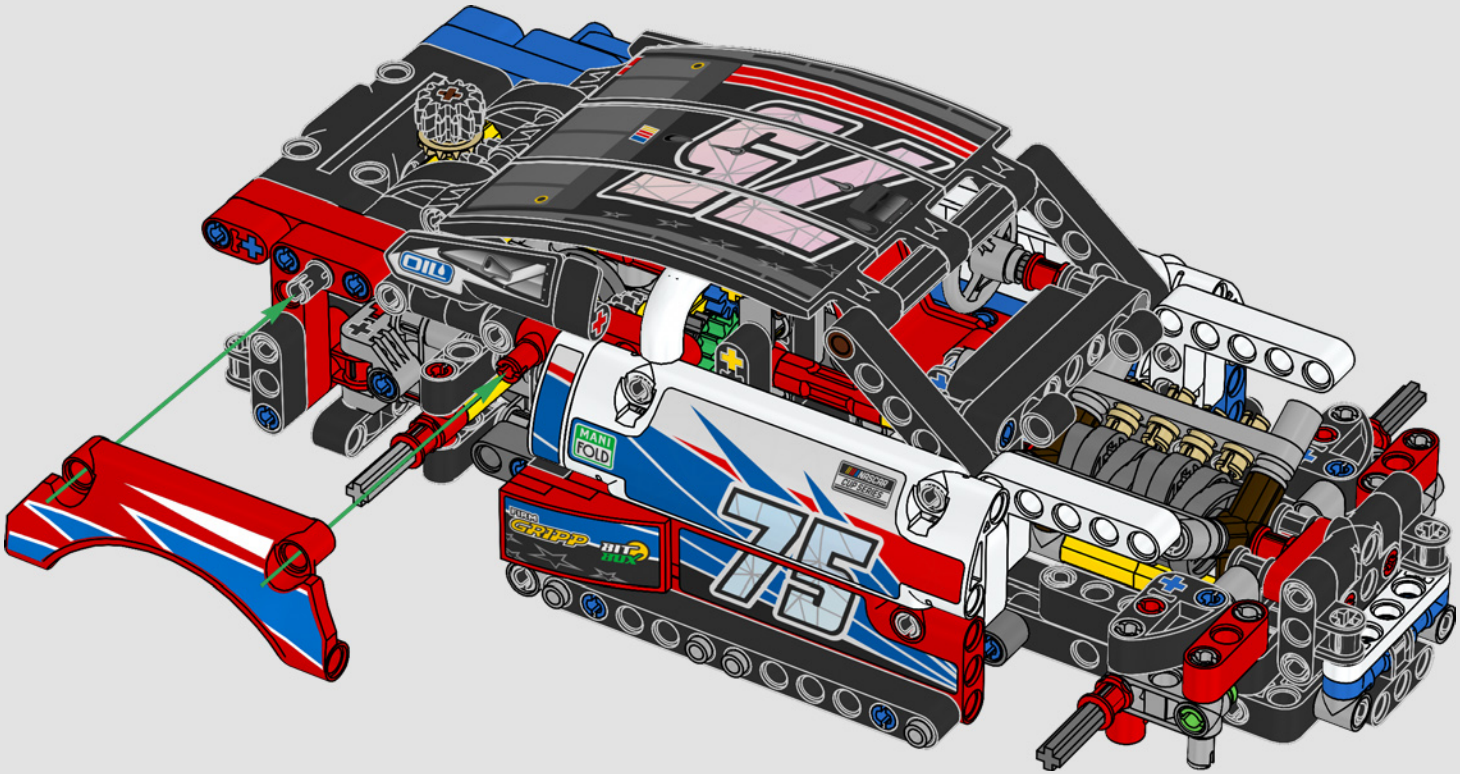

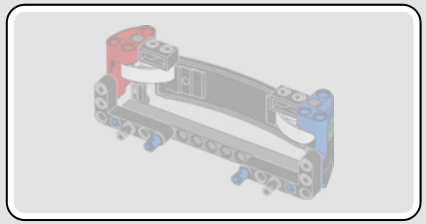

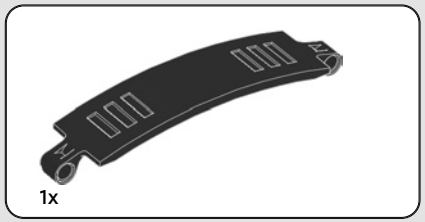

127

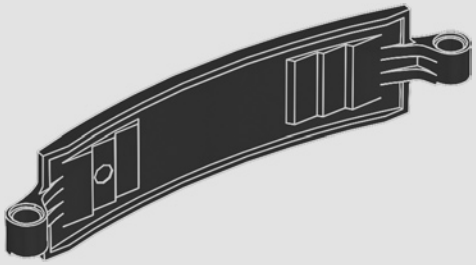

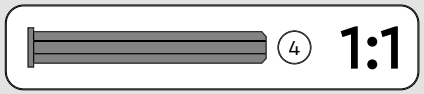

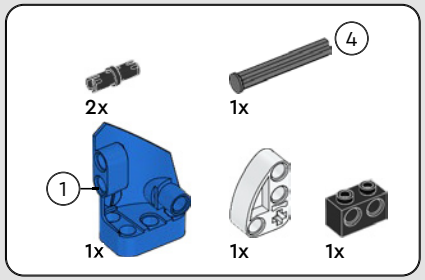

128

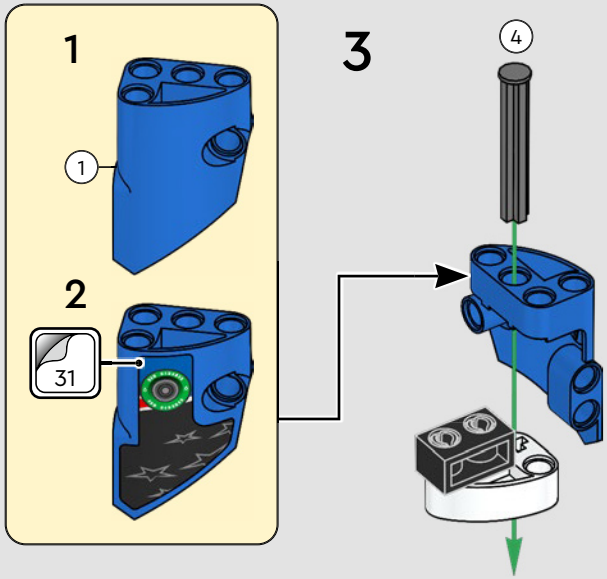

129

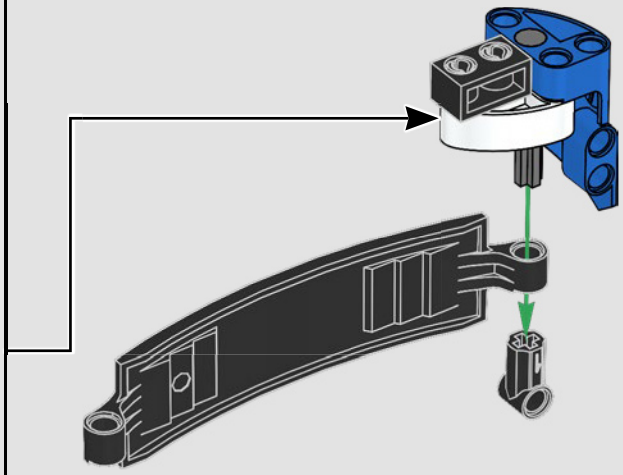

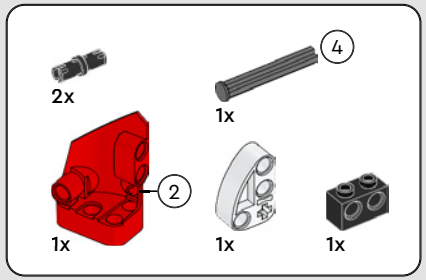

130

1

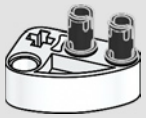

2

3

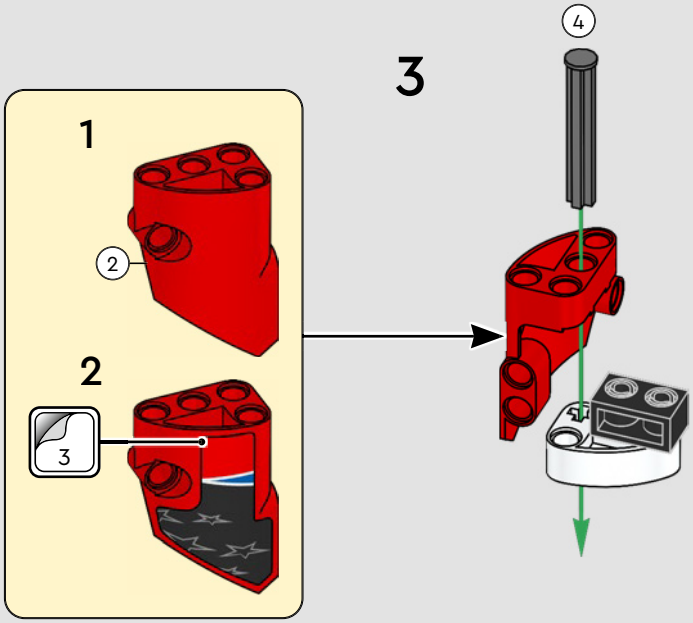

131

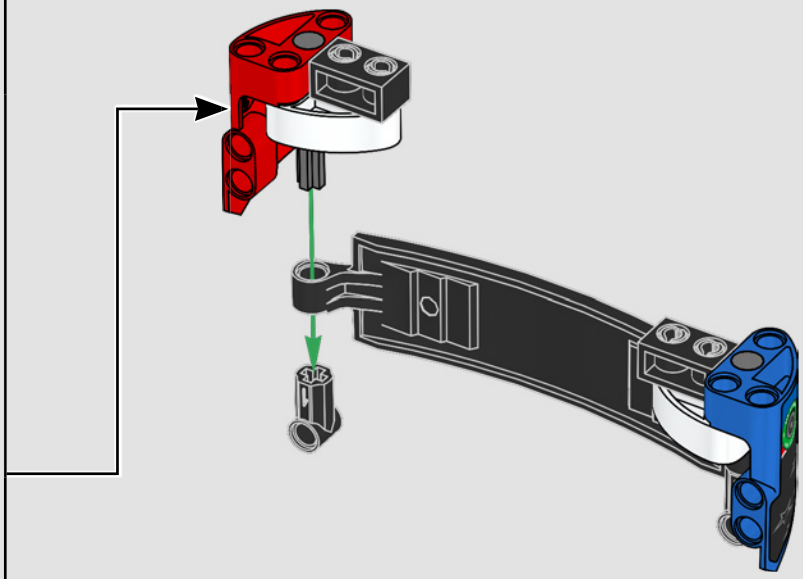

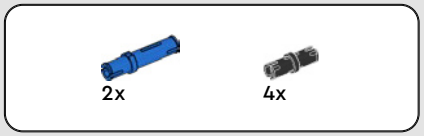

132

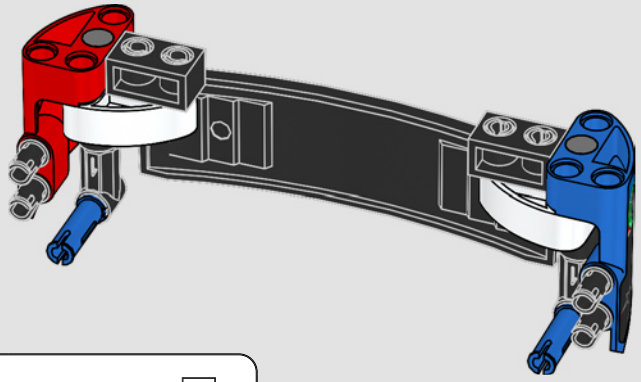

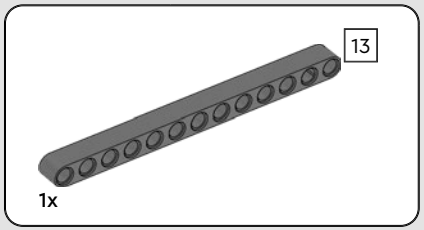

133

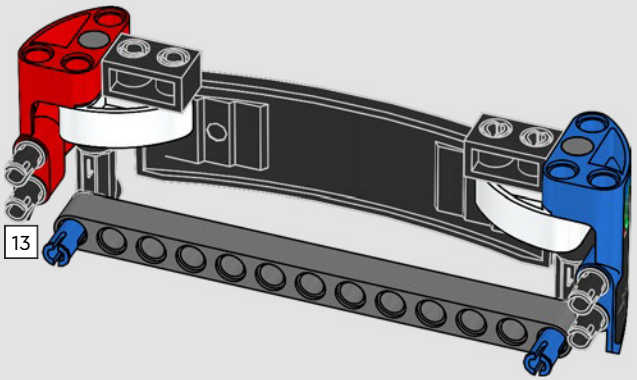

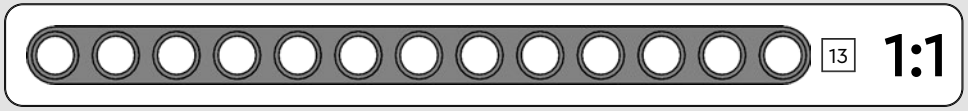

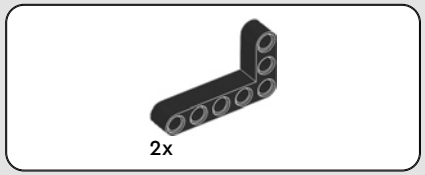

134

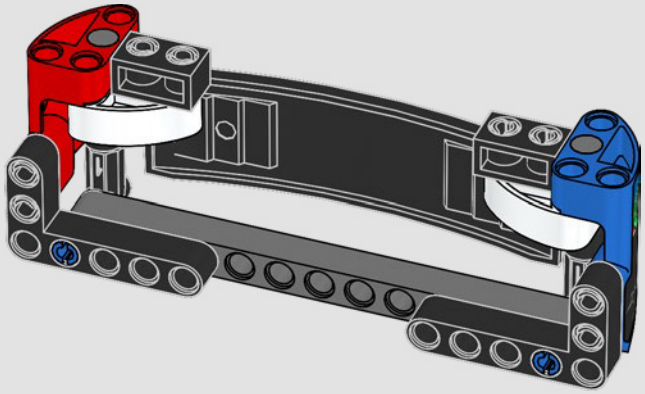

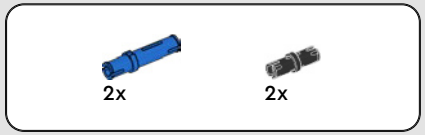

135

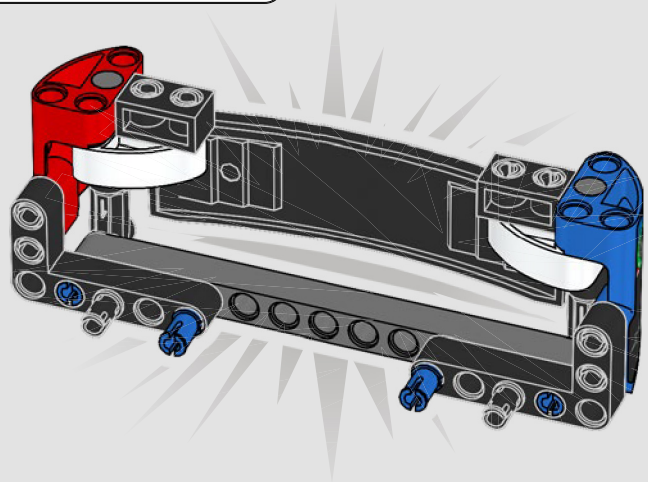

136

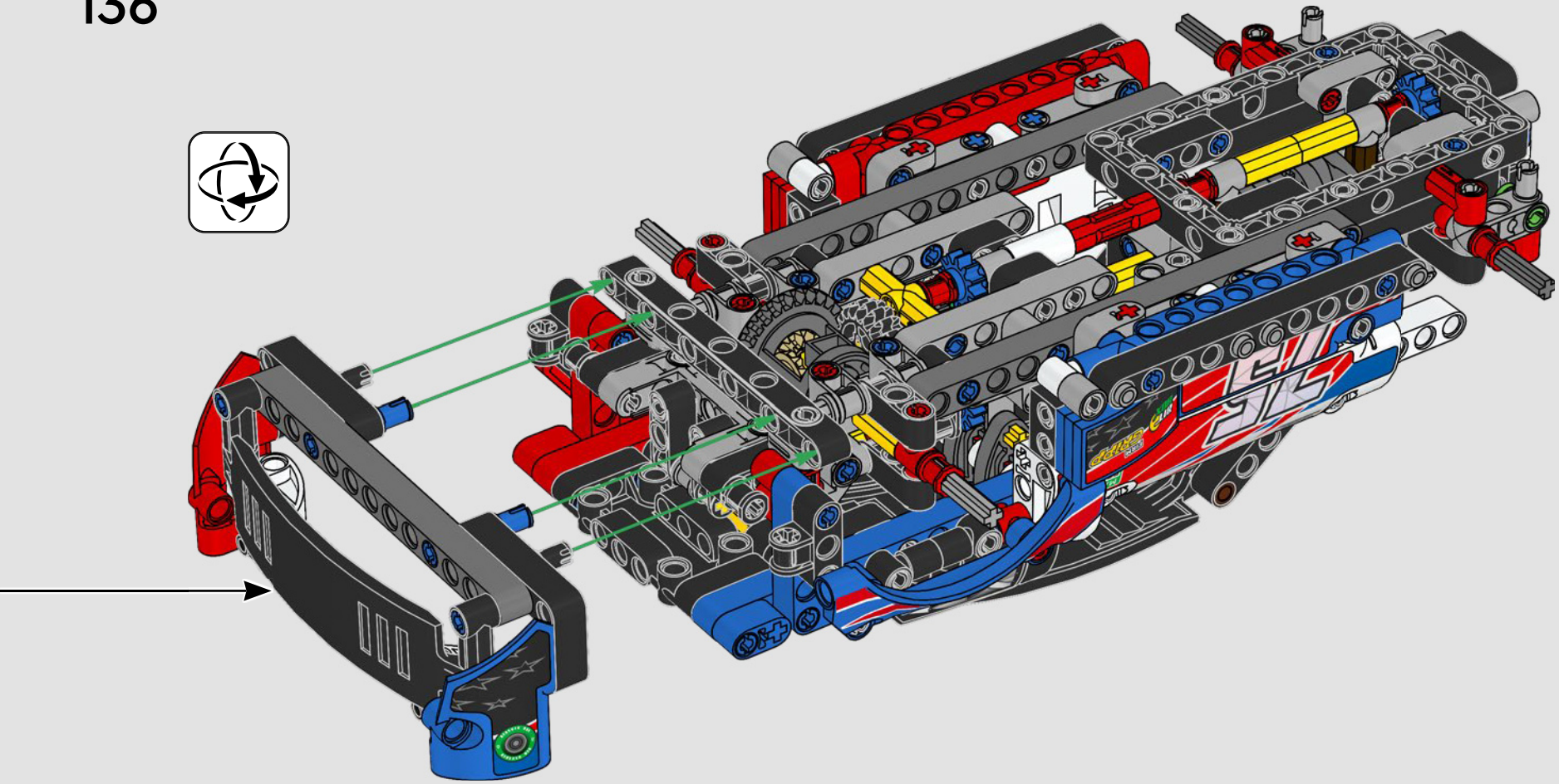

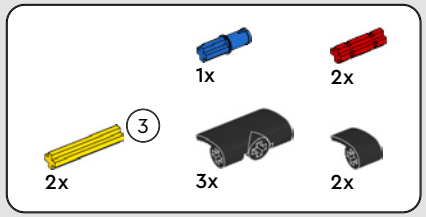

137

1

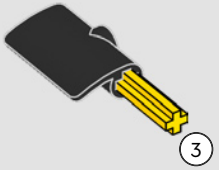

2

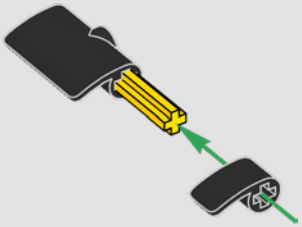

3

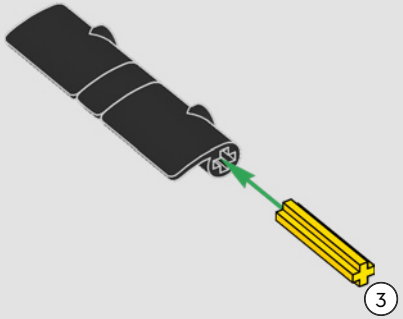

4

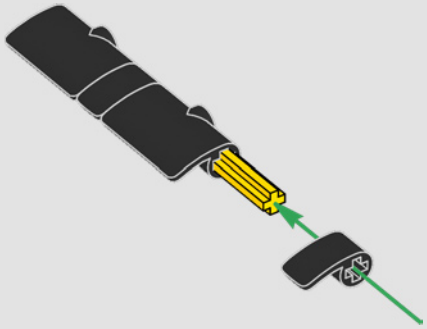

5

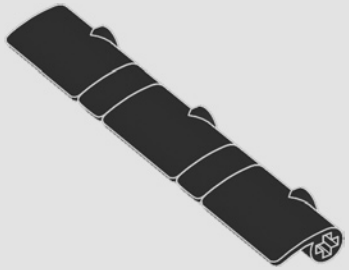

6

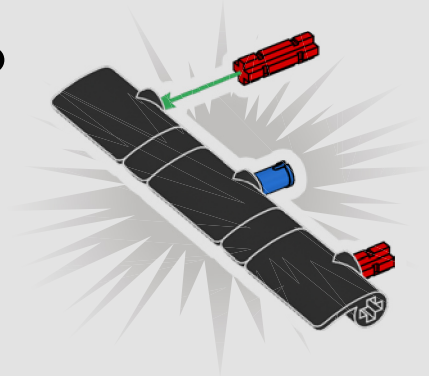

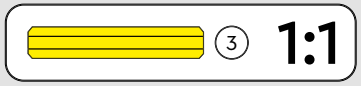

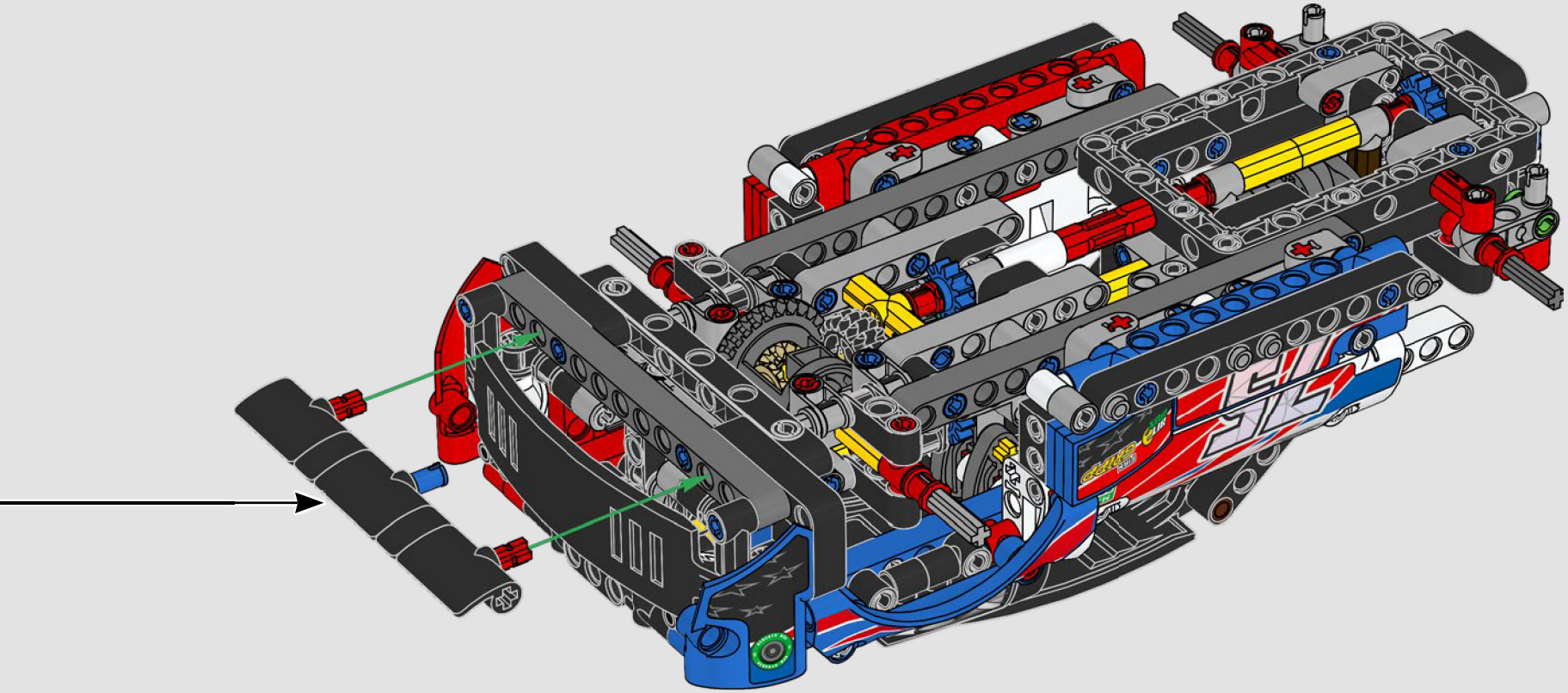

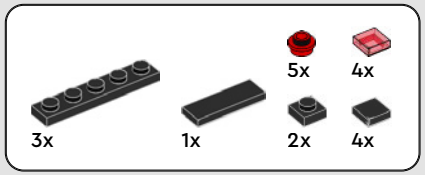

138

1

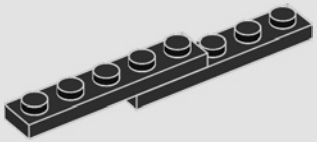

2

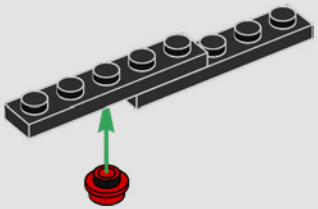

3

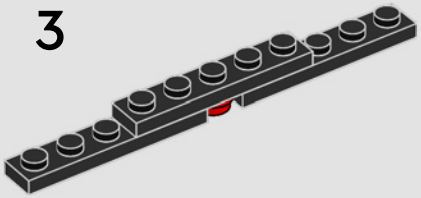

4

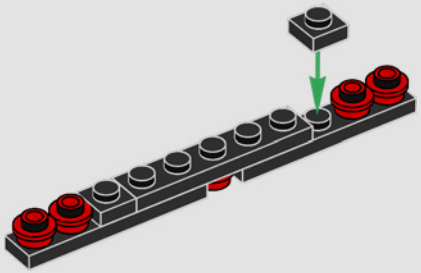

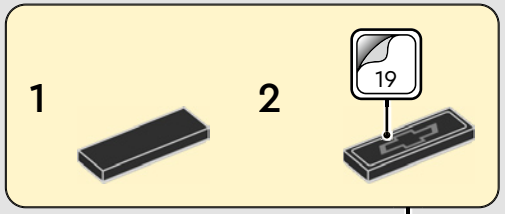

5

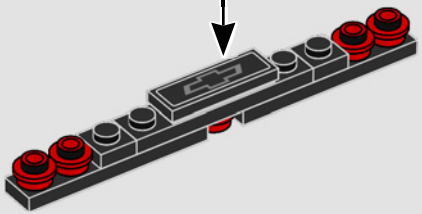

6

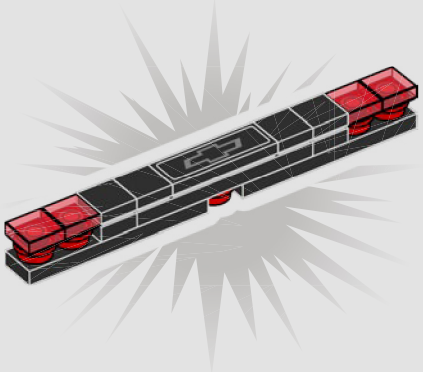

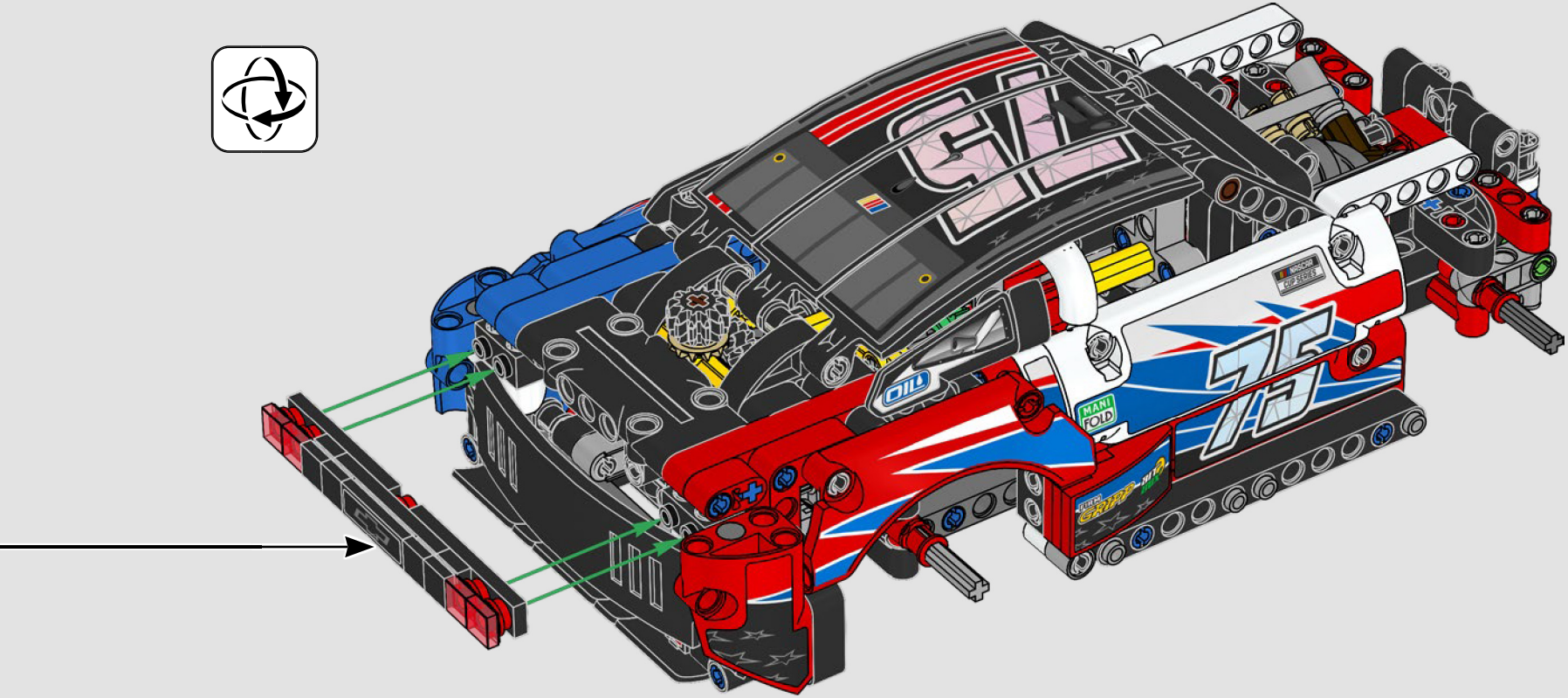
OIL
MANI FOLD
75

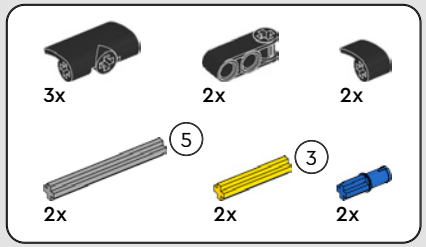

139

1

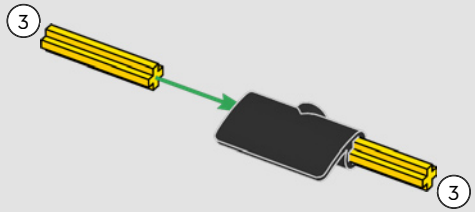

2

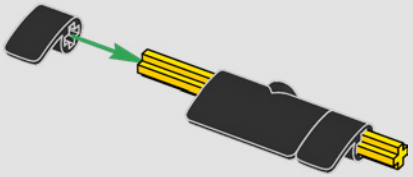

3

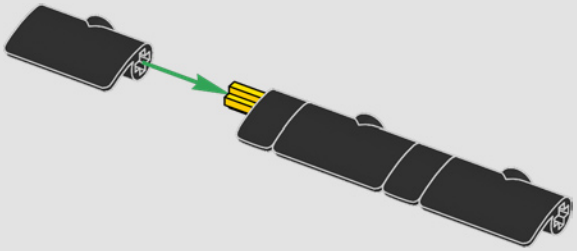

4

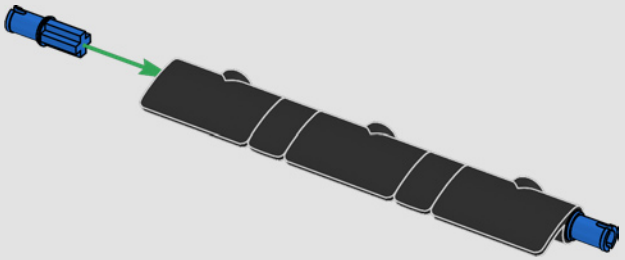

5

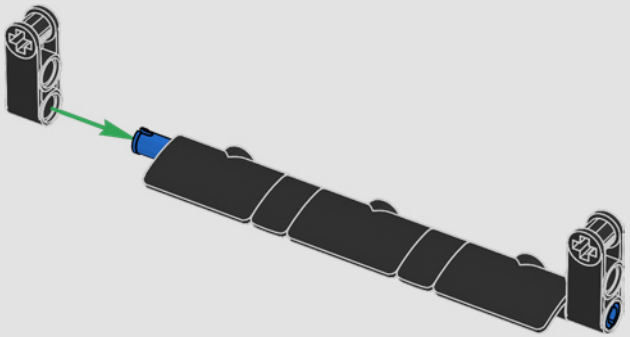

6

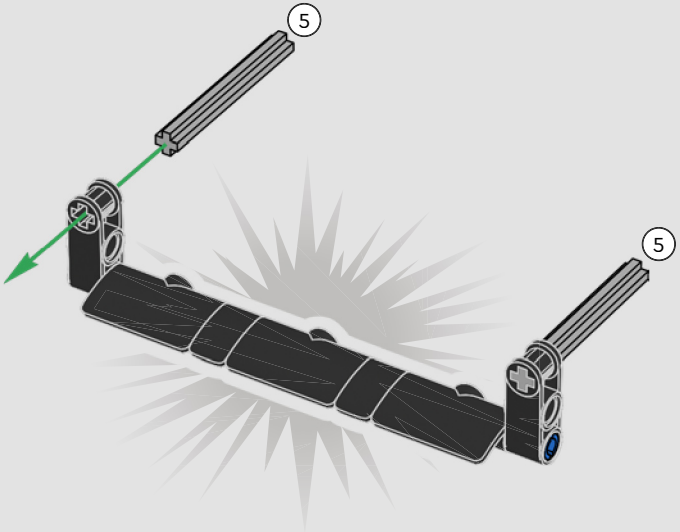

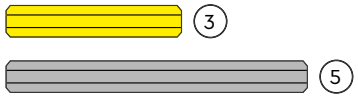

1:1

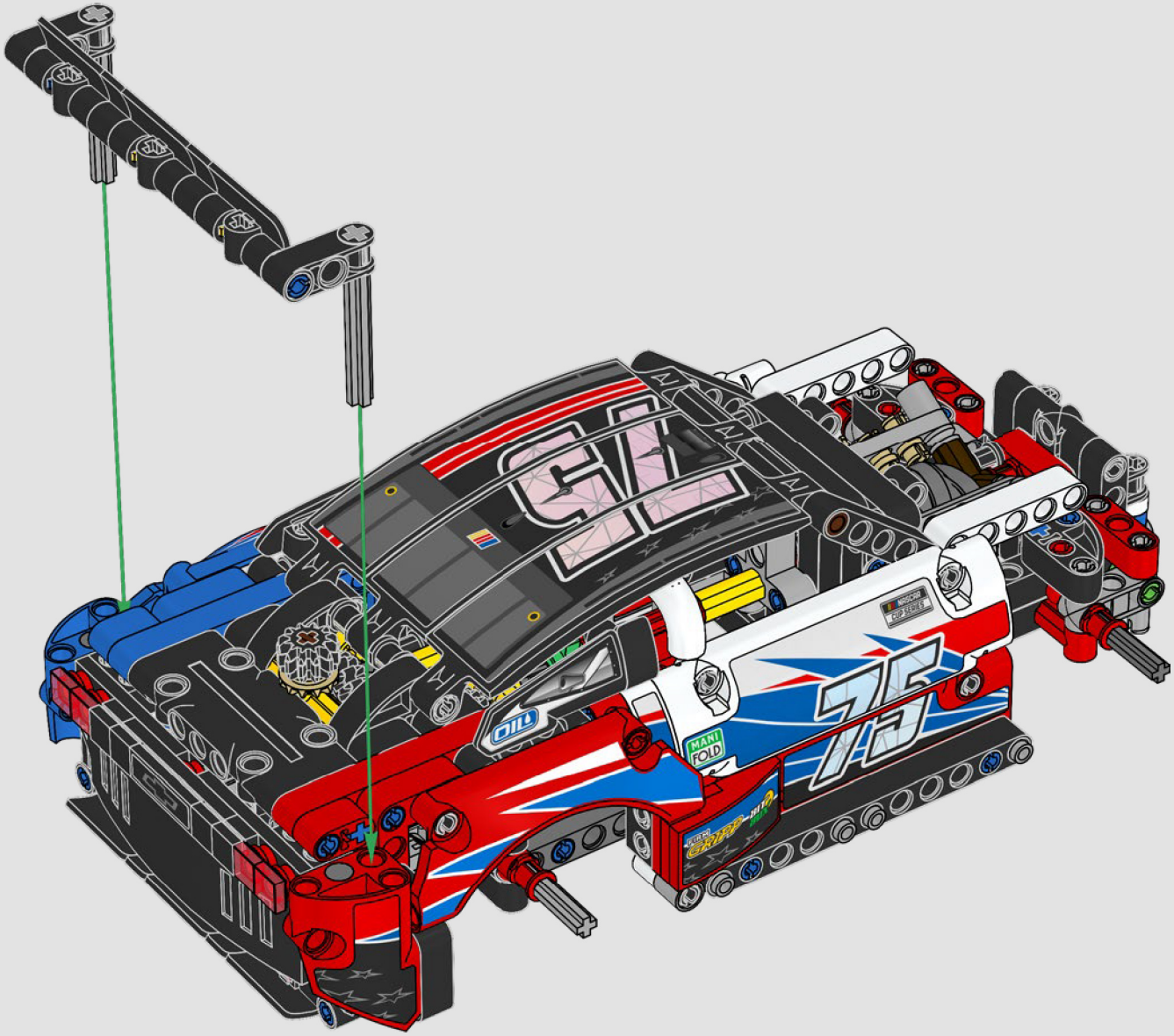
OIL
MANI FOLD
75

140

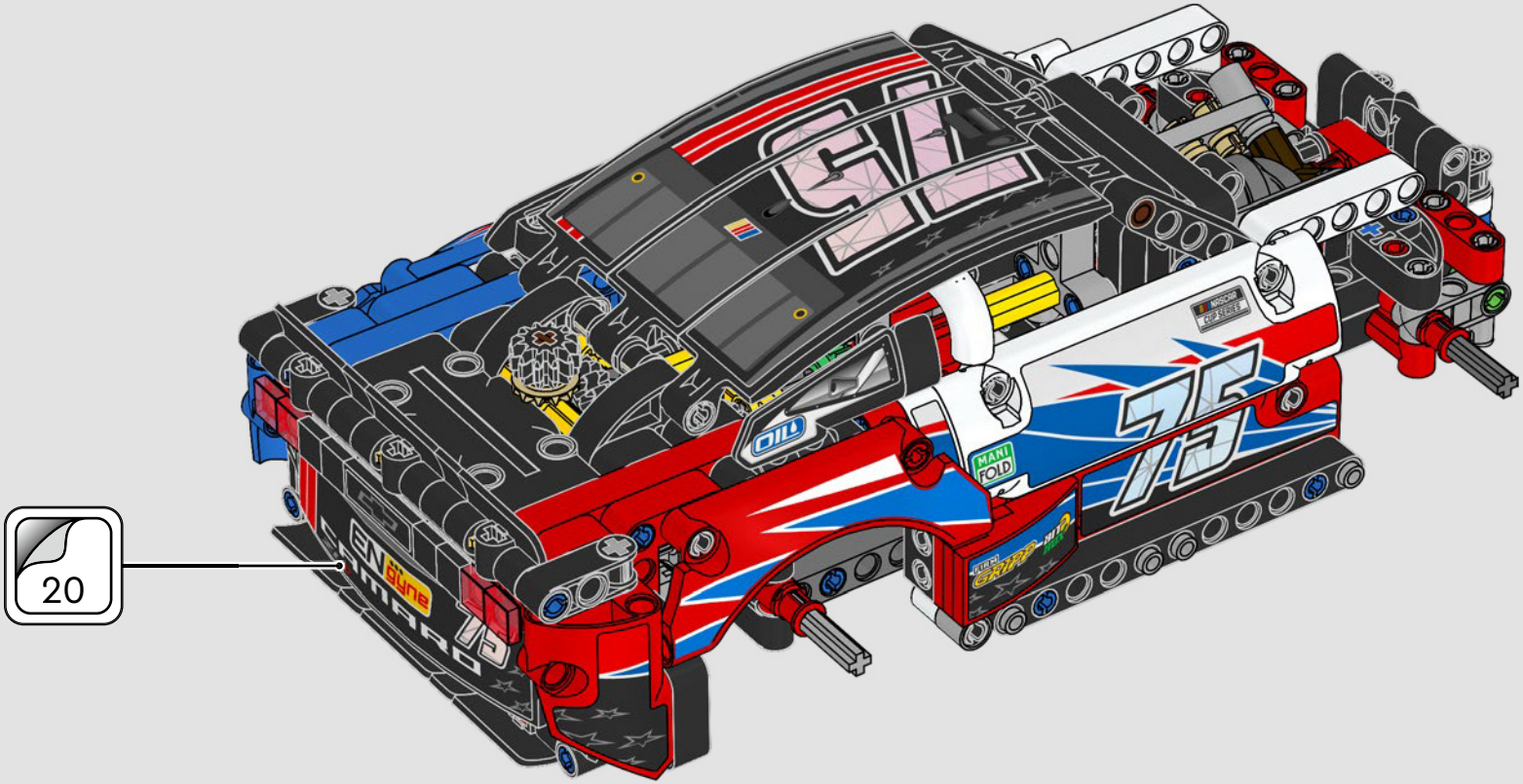

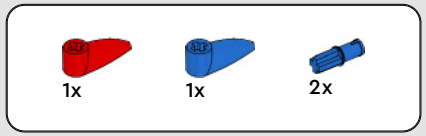

141

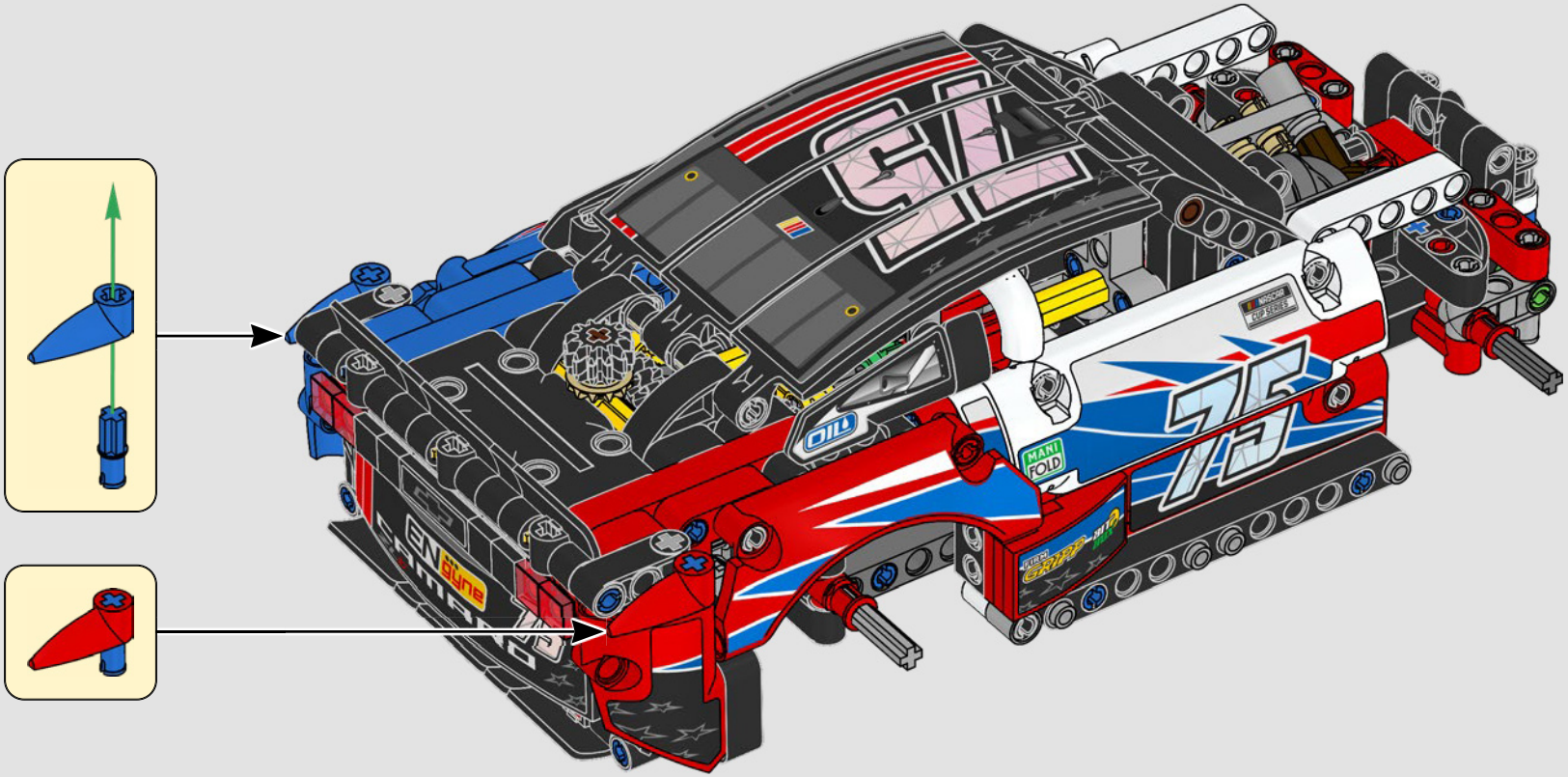

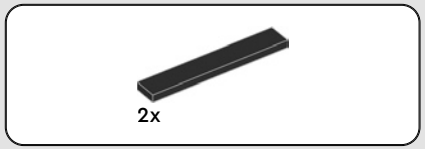

142

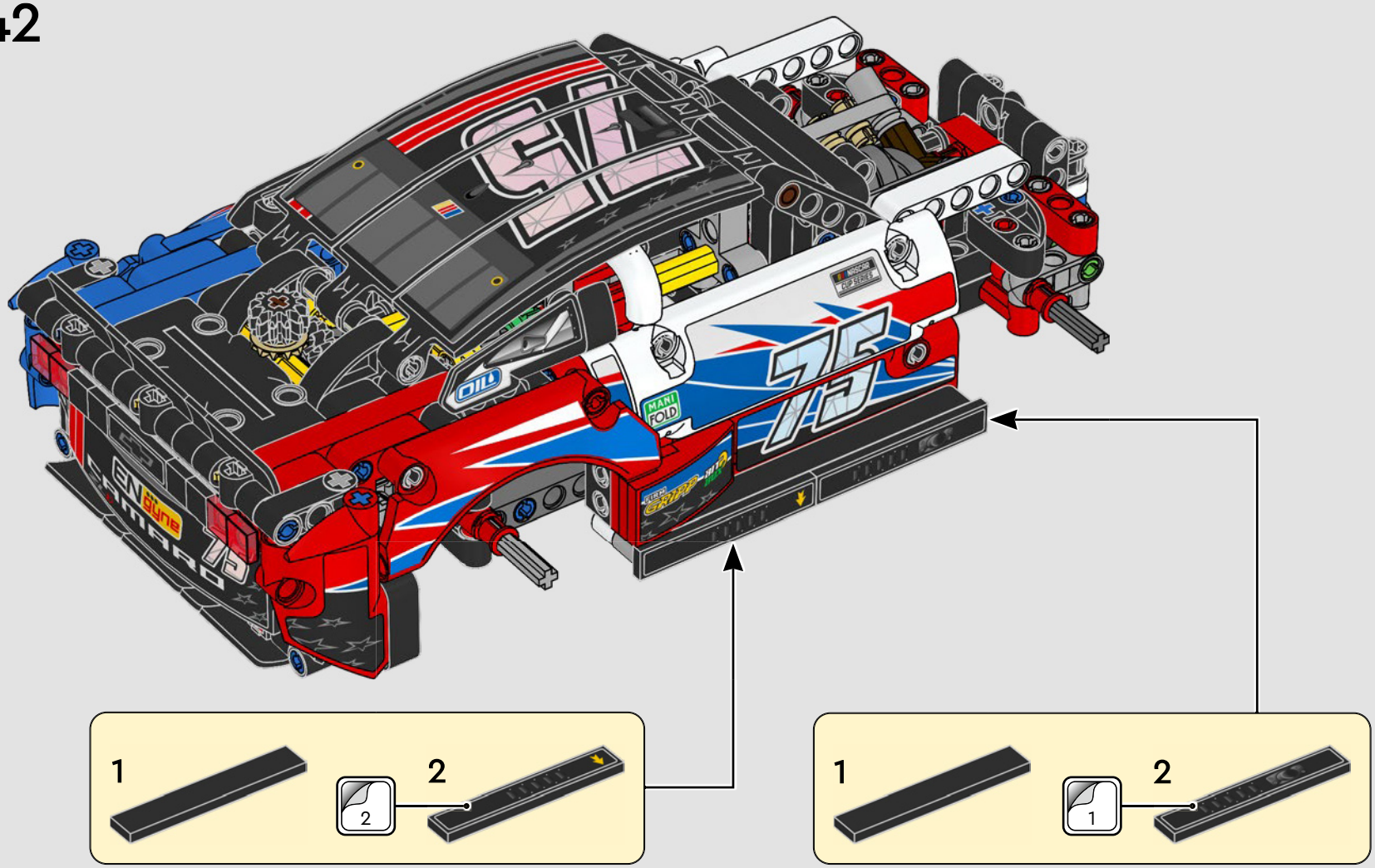

2x

143

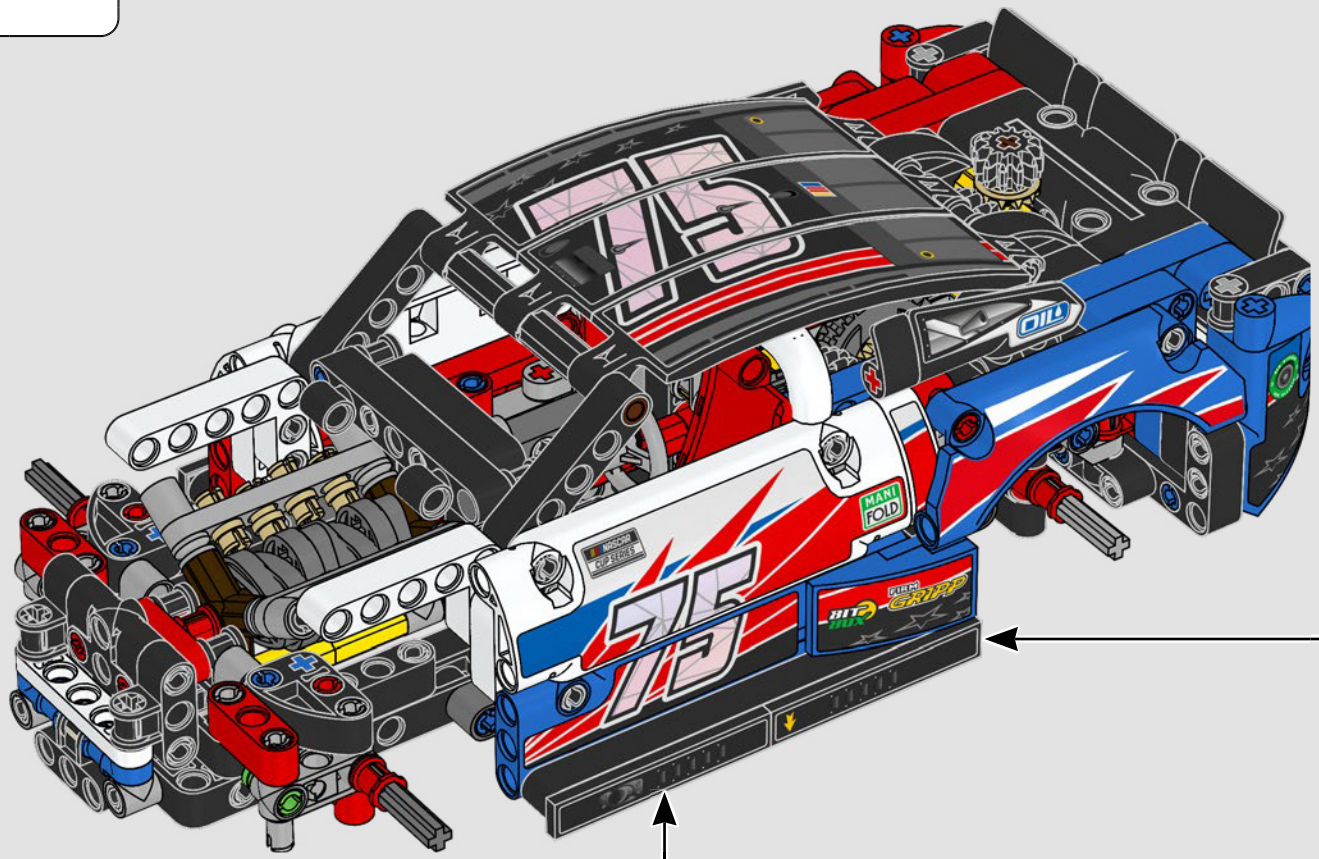

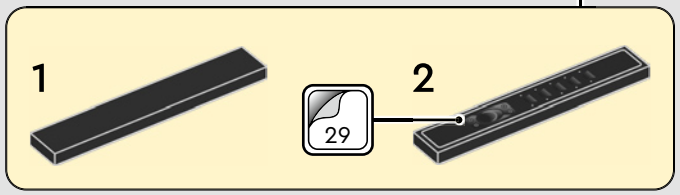

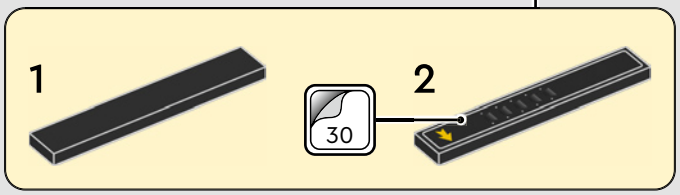

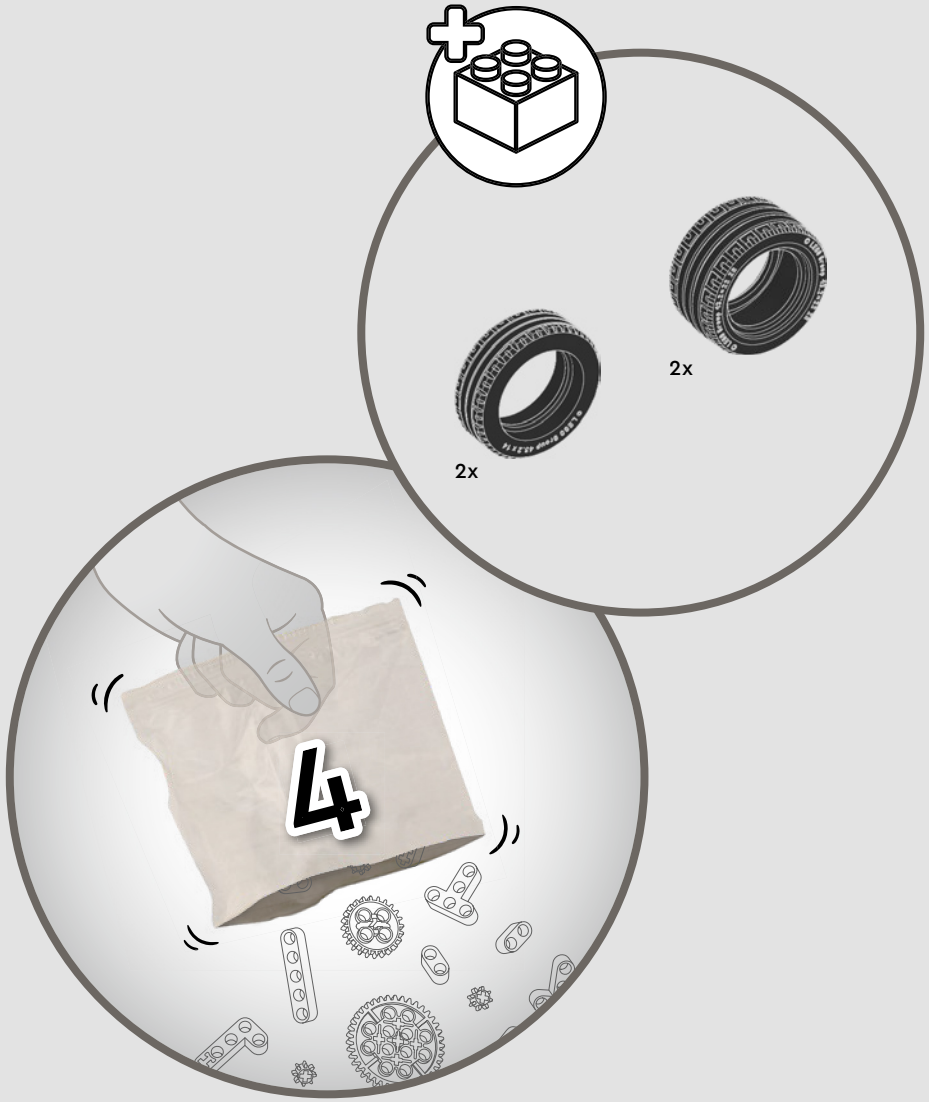

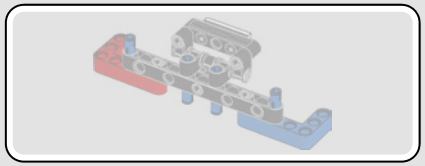

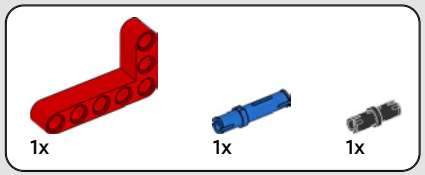

144

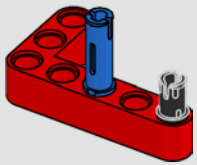

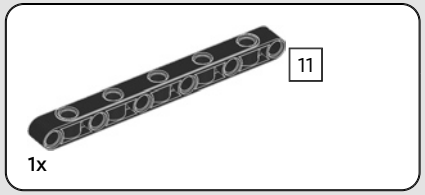

145

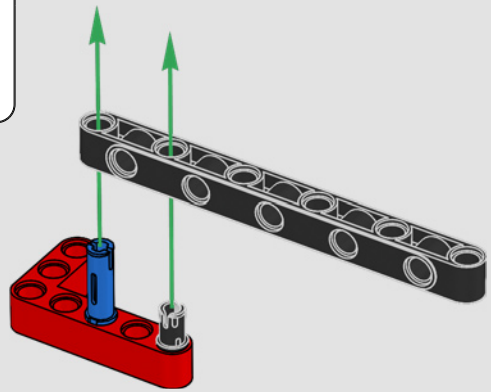

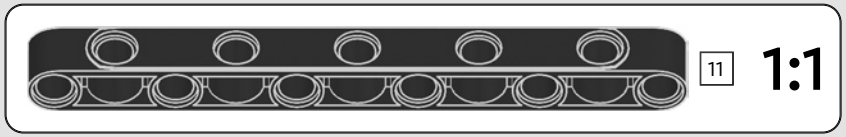

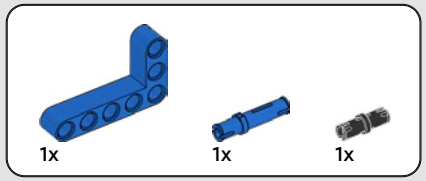

146

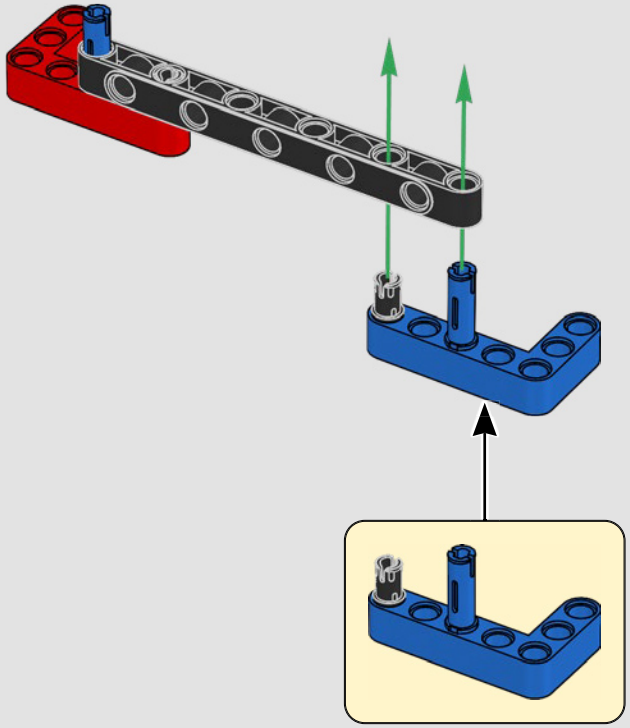

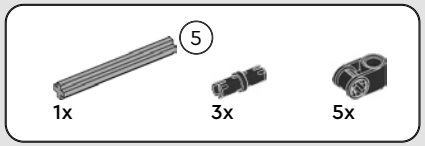

147

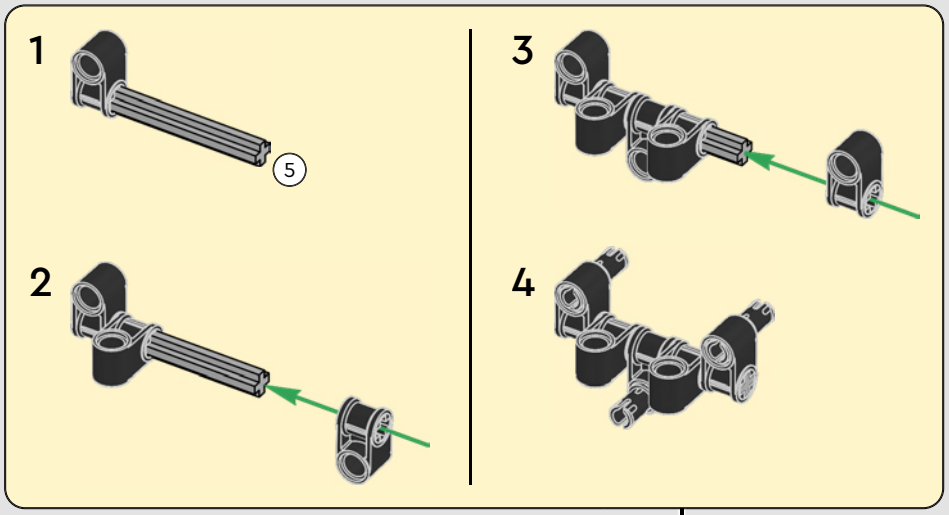

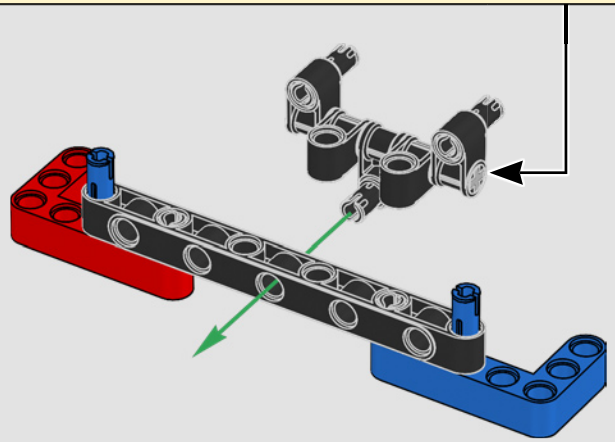

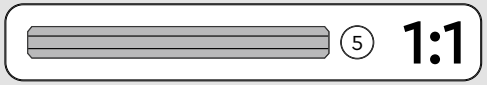

148

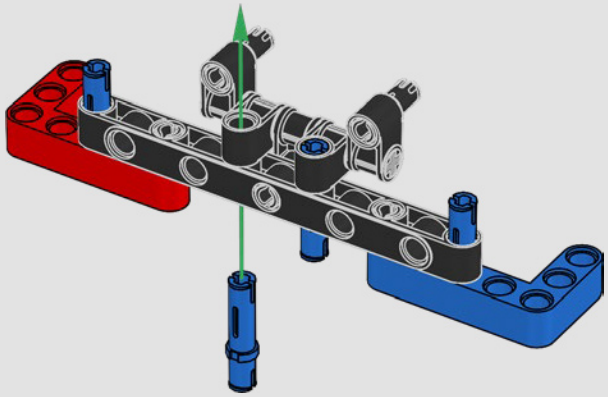

1:1

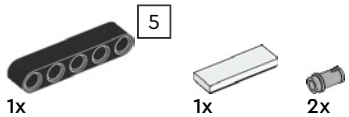

149

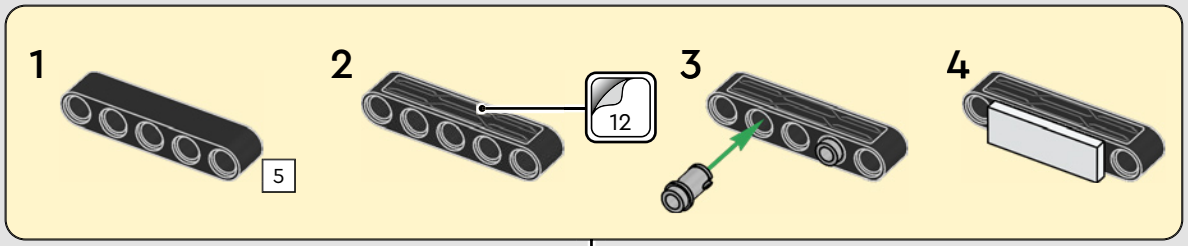

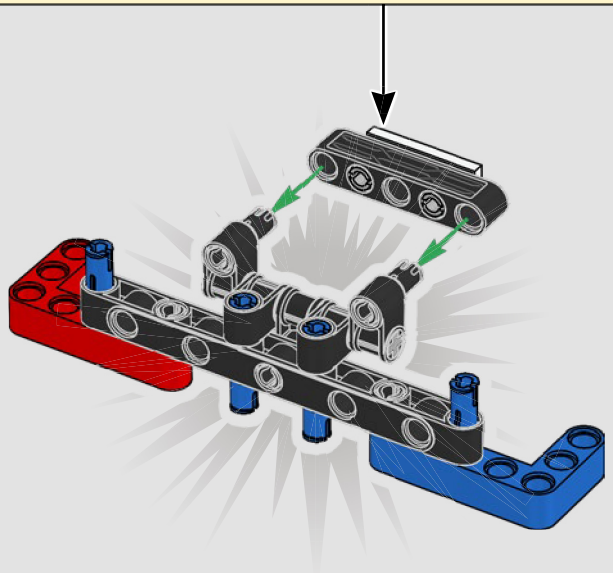

150

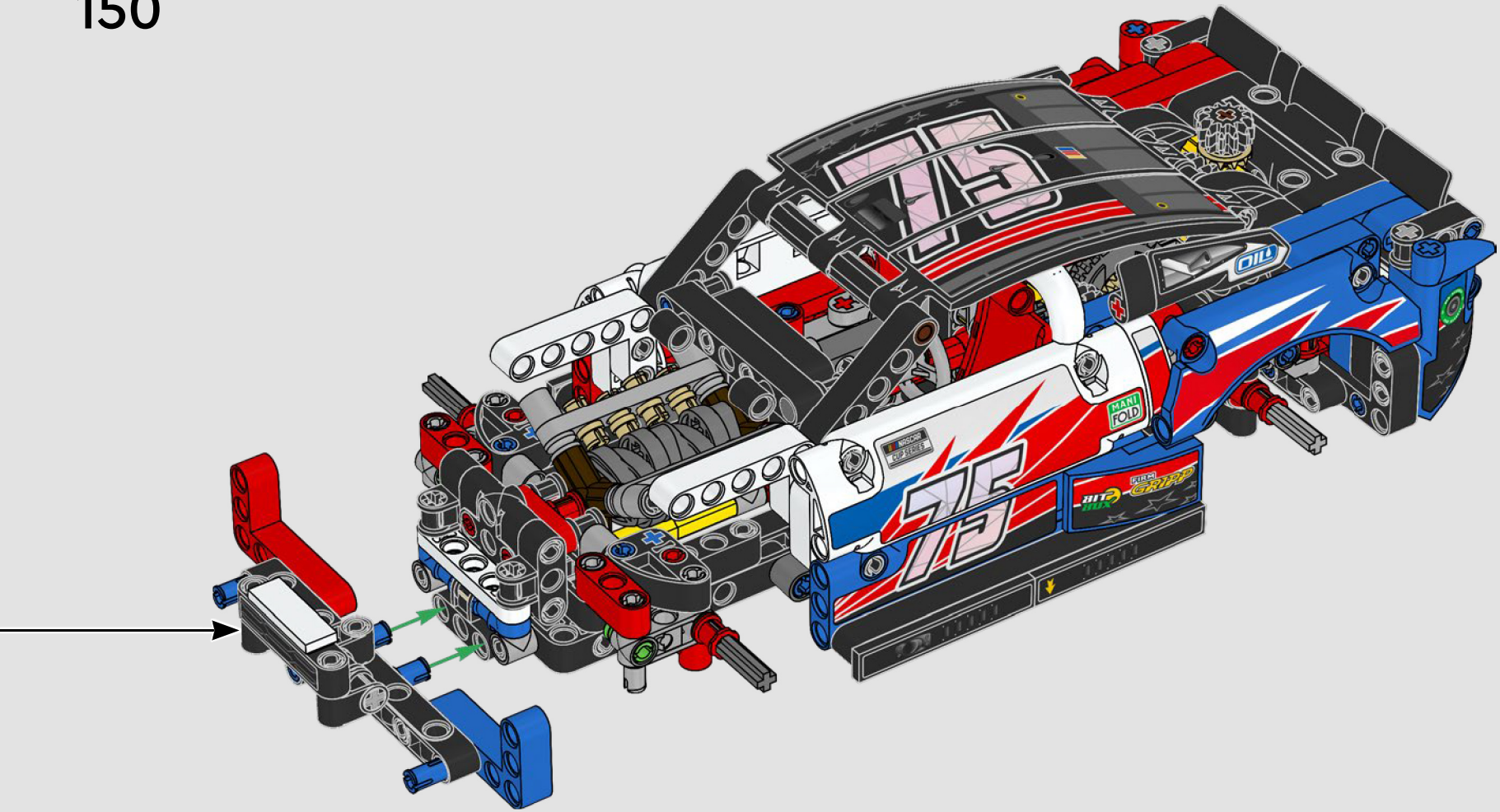

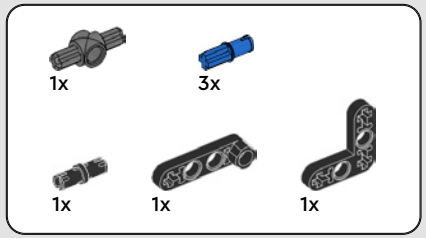

151

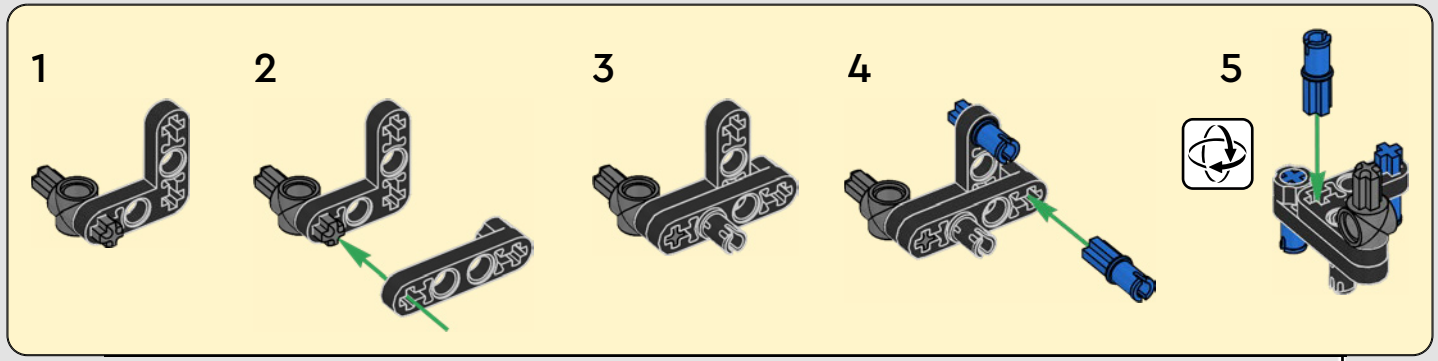

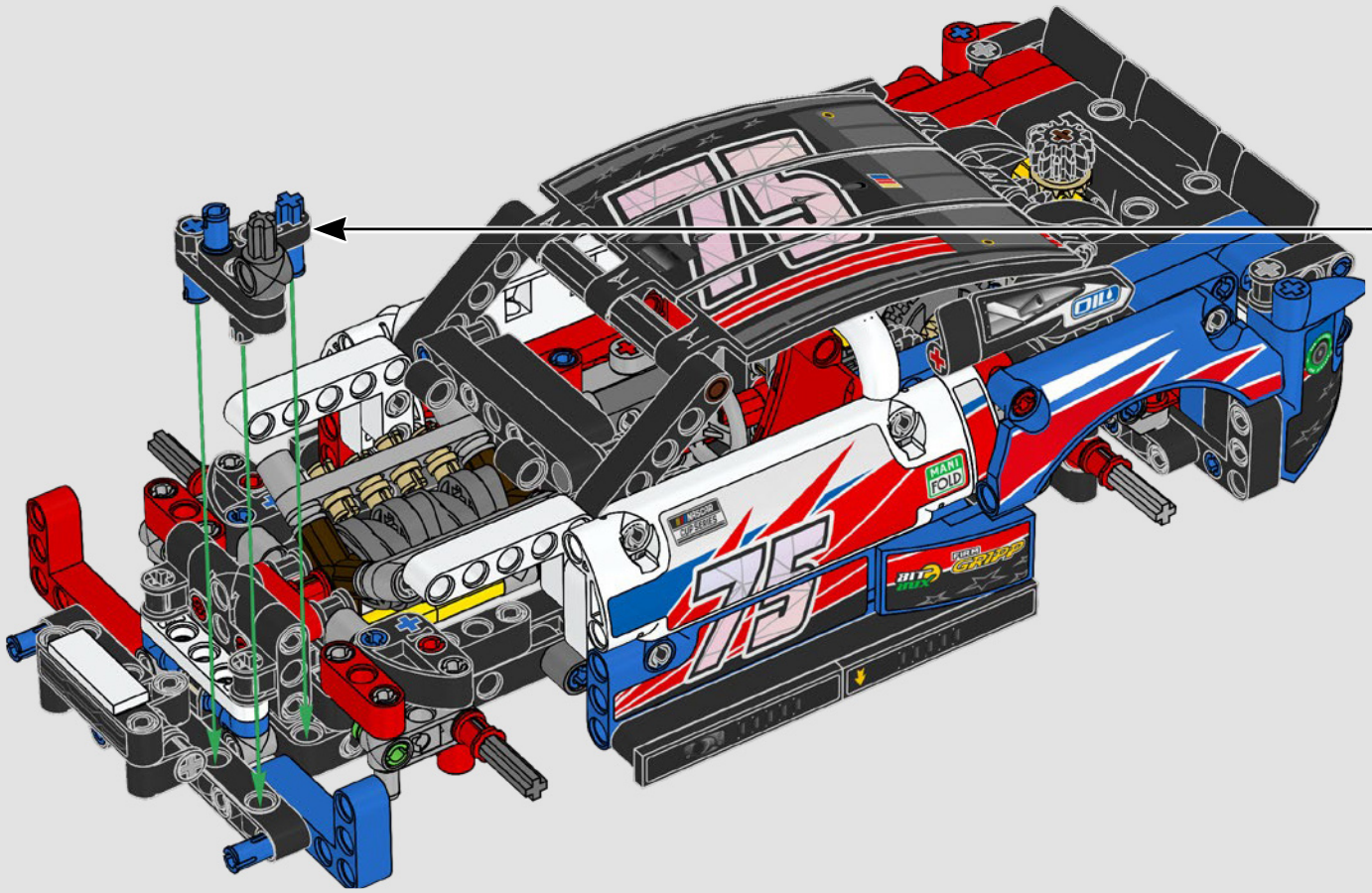

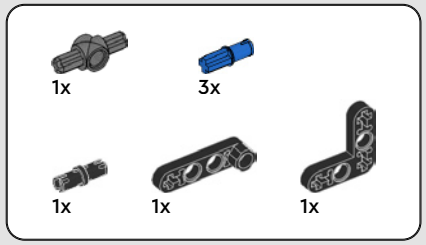

152

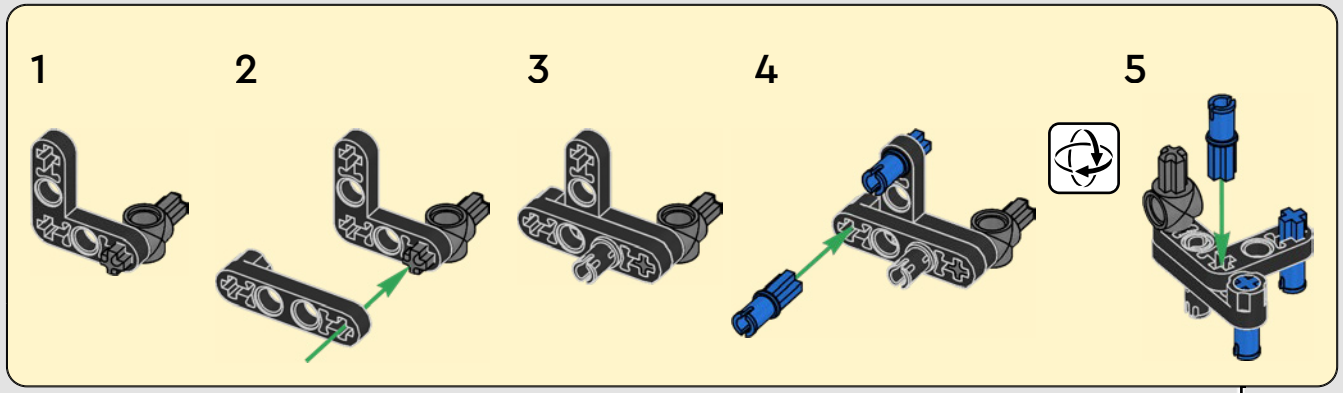

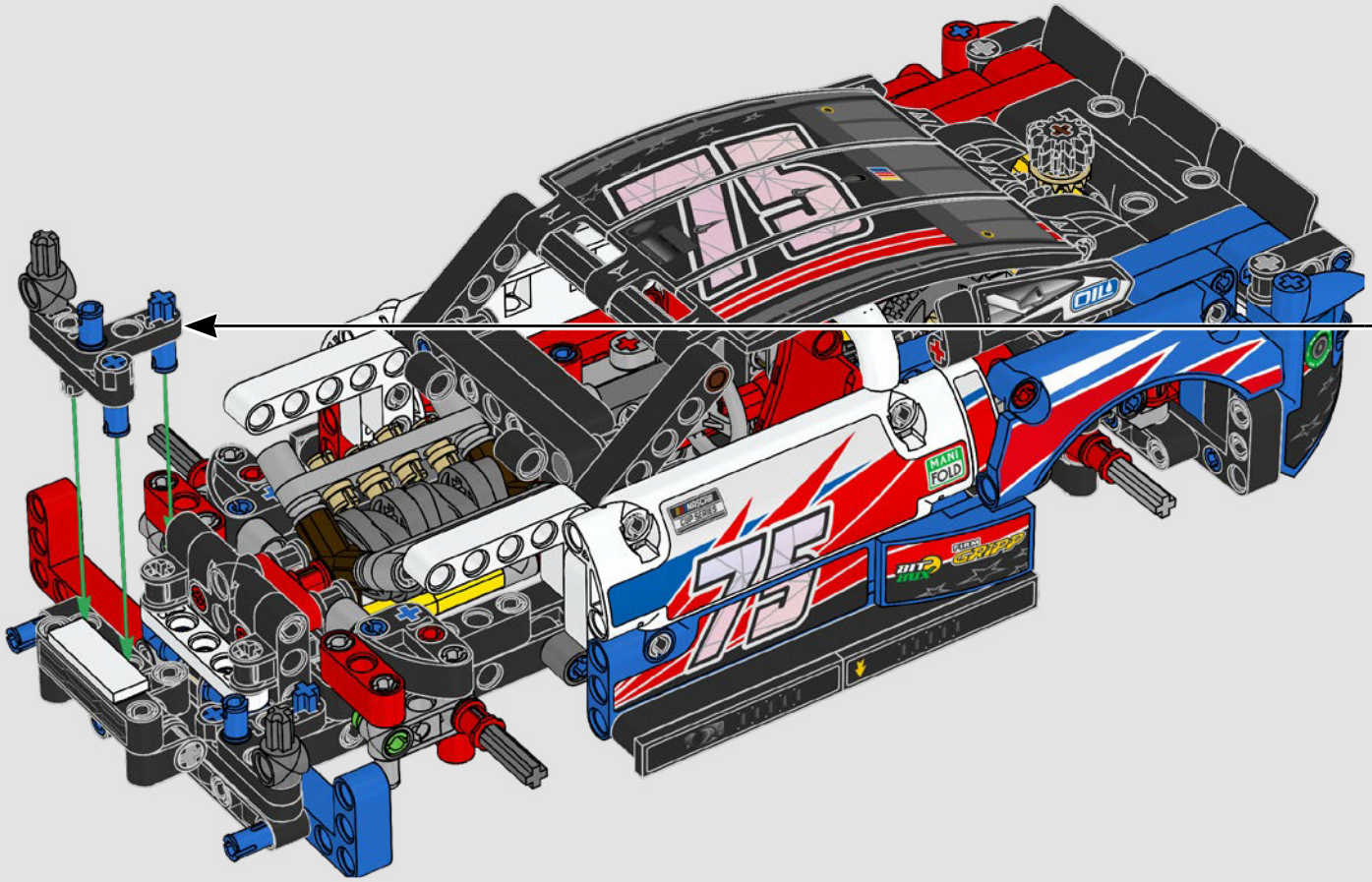

153

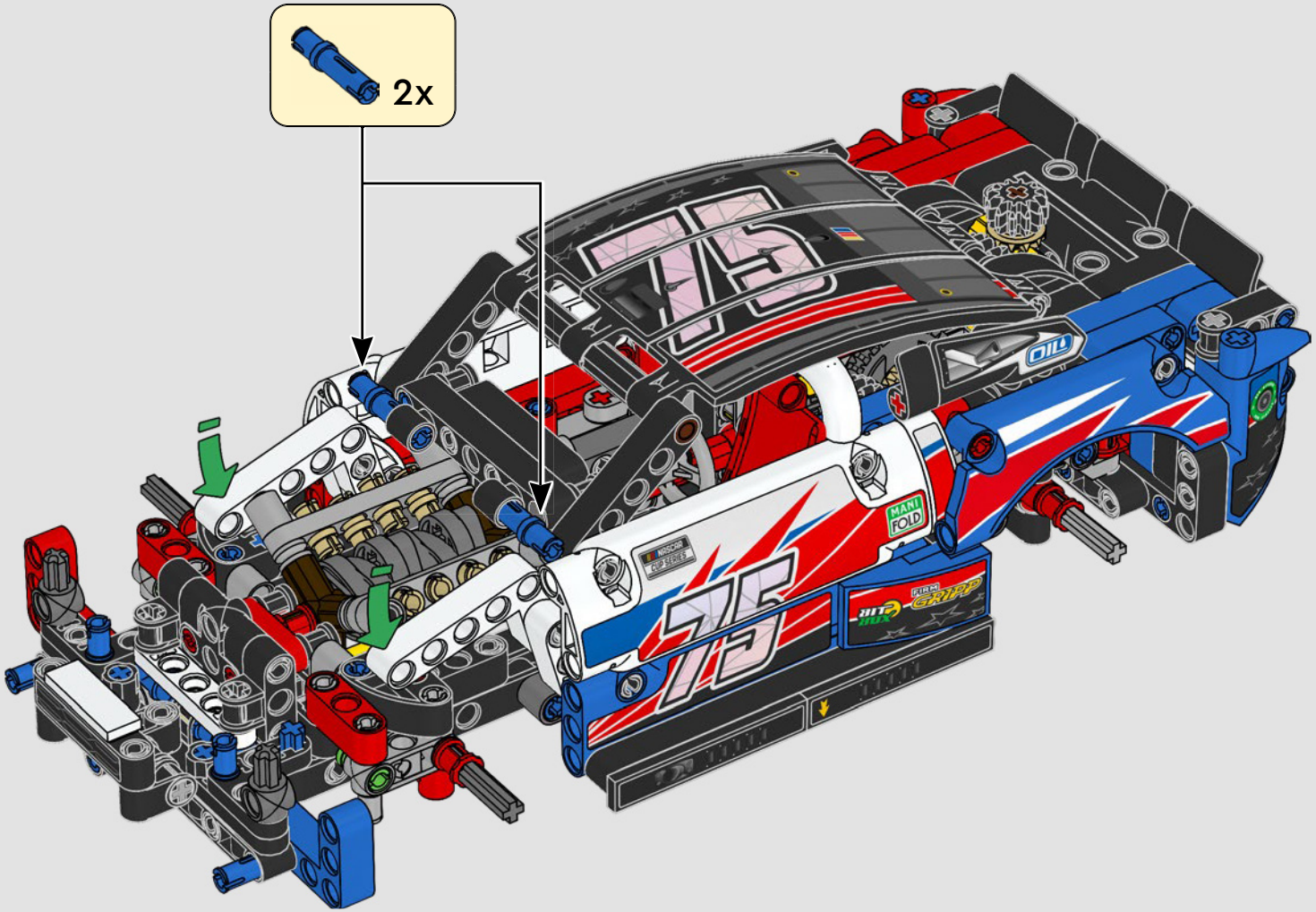

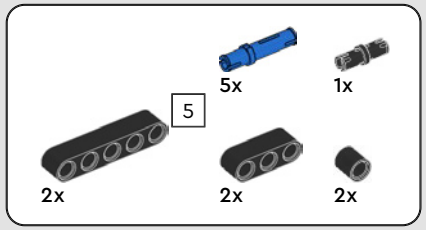

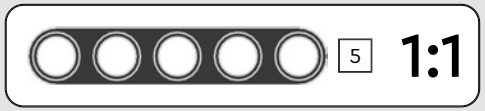

154

1

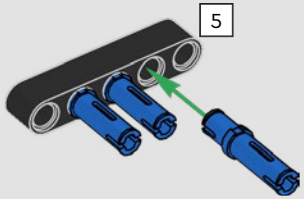

2

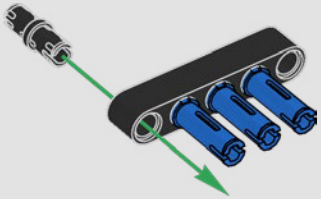

3

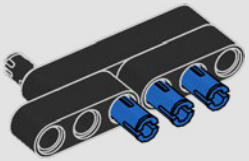

4

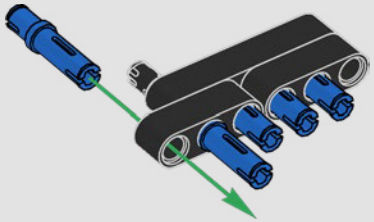

5

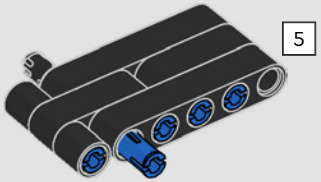

6

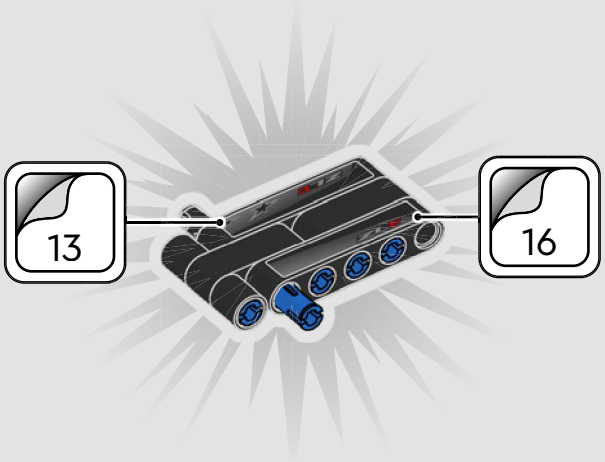

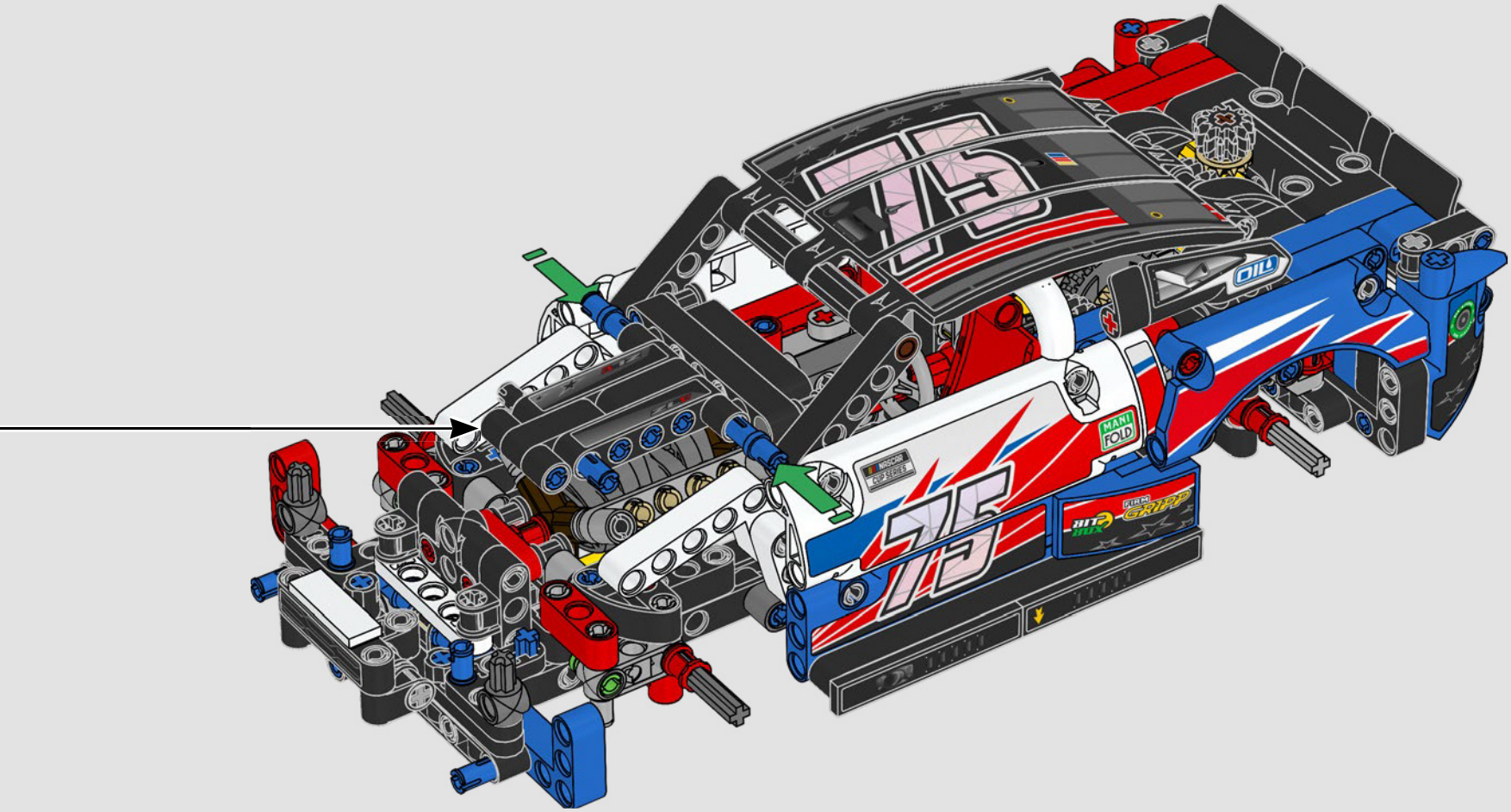
OIL
MANI FOLD
FIRM GRIPP
BITE BOX

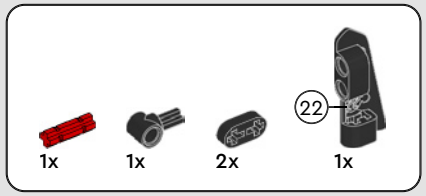
22
1x
1x
2x
1x

155

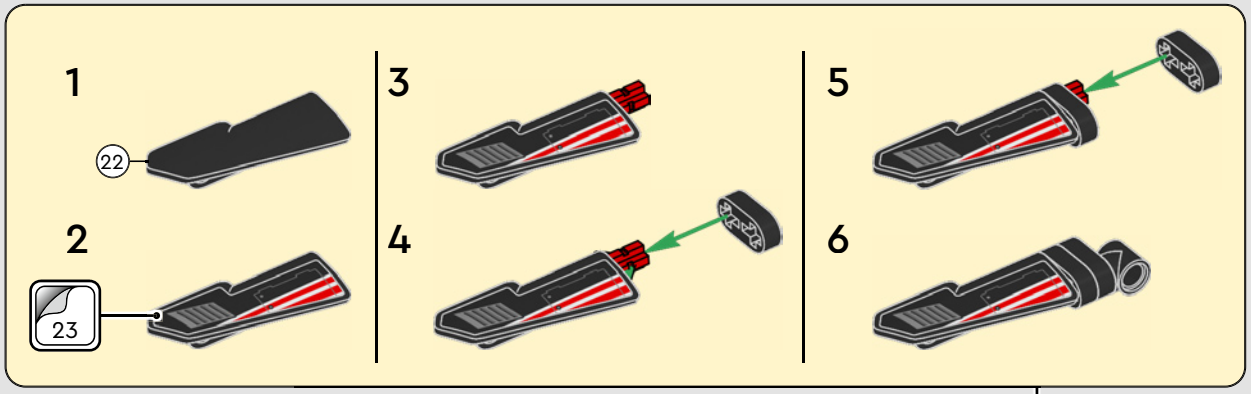
1
22
2
23
3
4
5
6

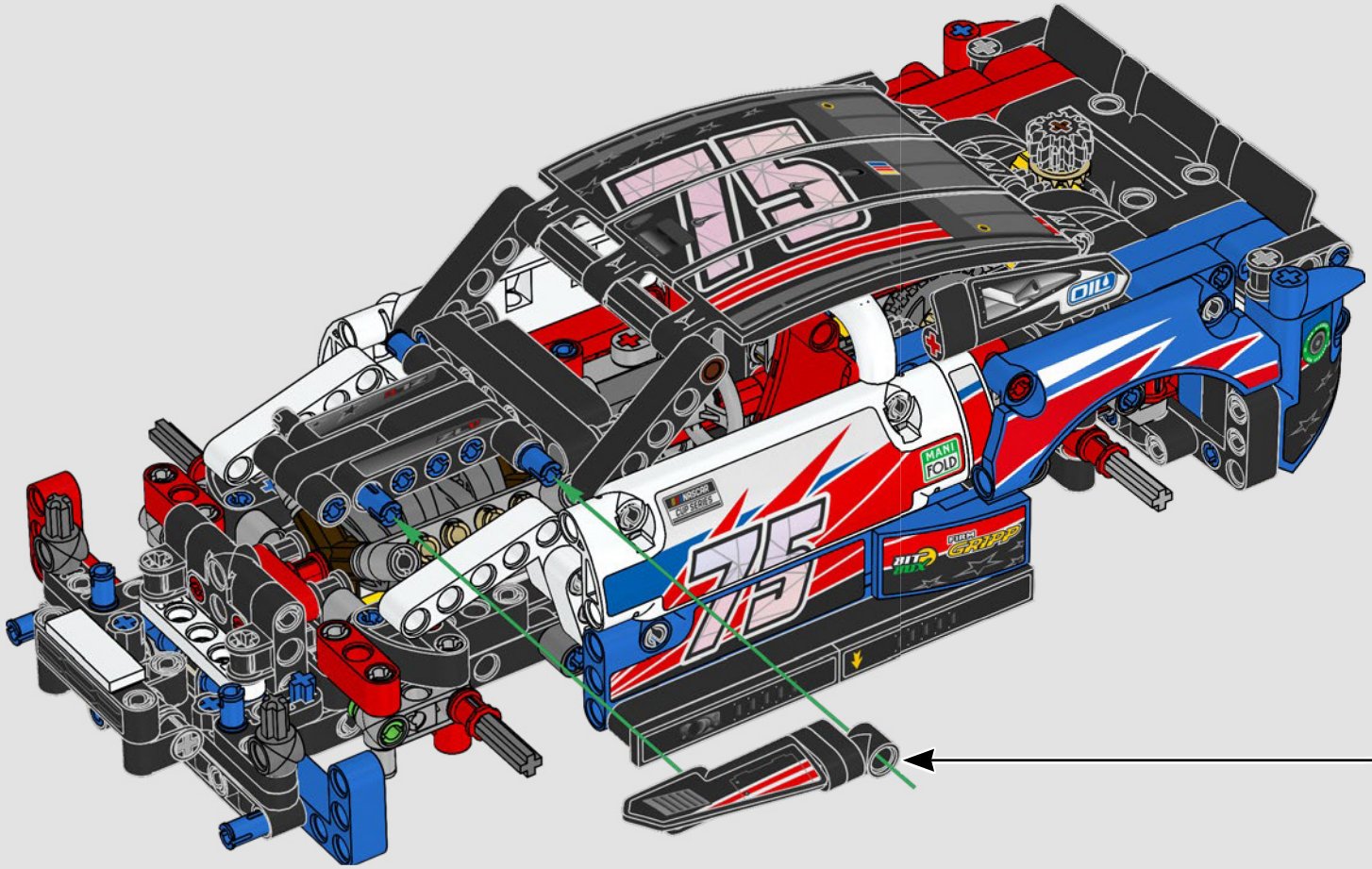
75
OIL
MANI FOLD
NASCAR CUP SERIES
DURA GRIPP

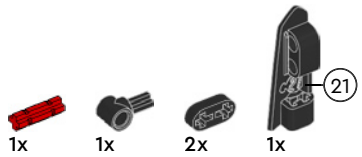

156

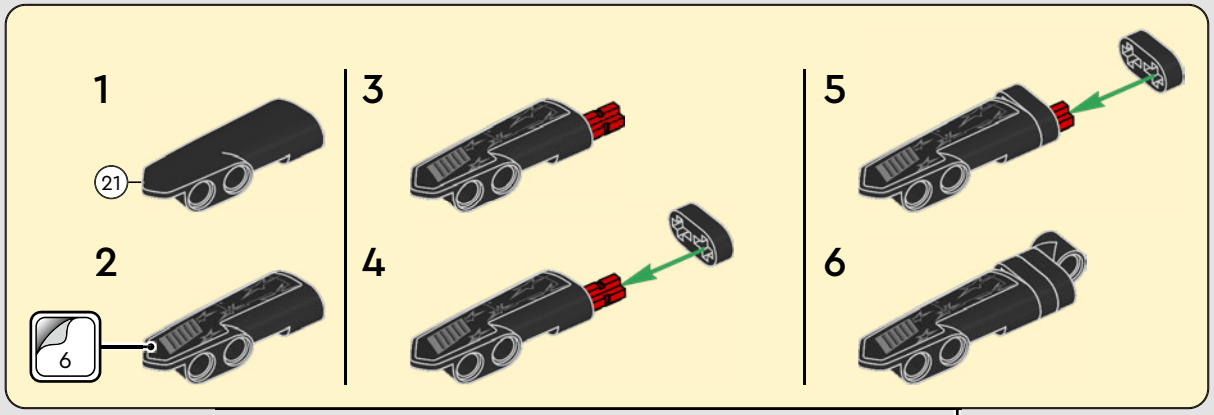

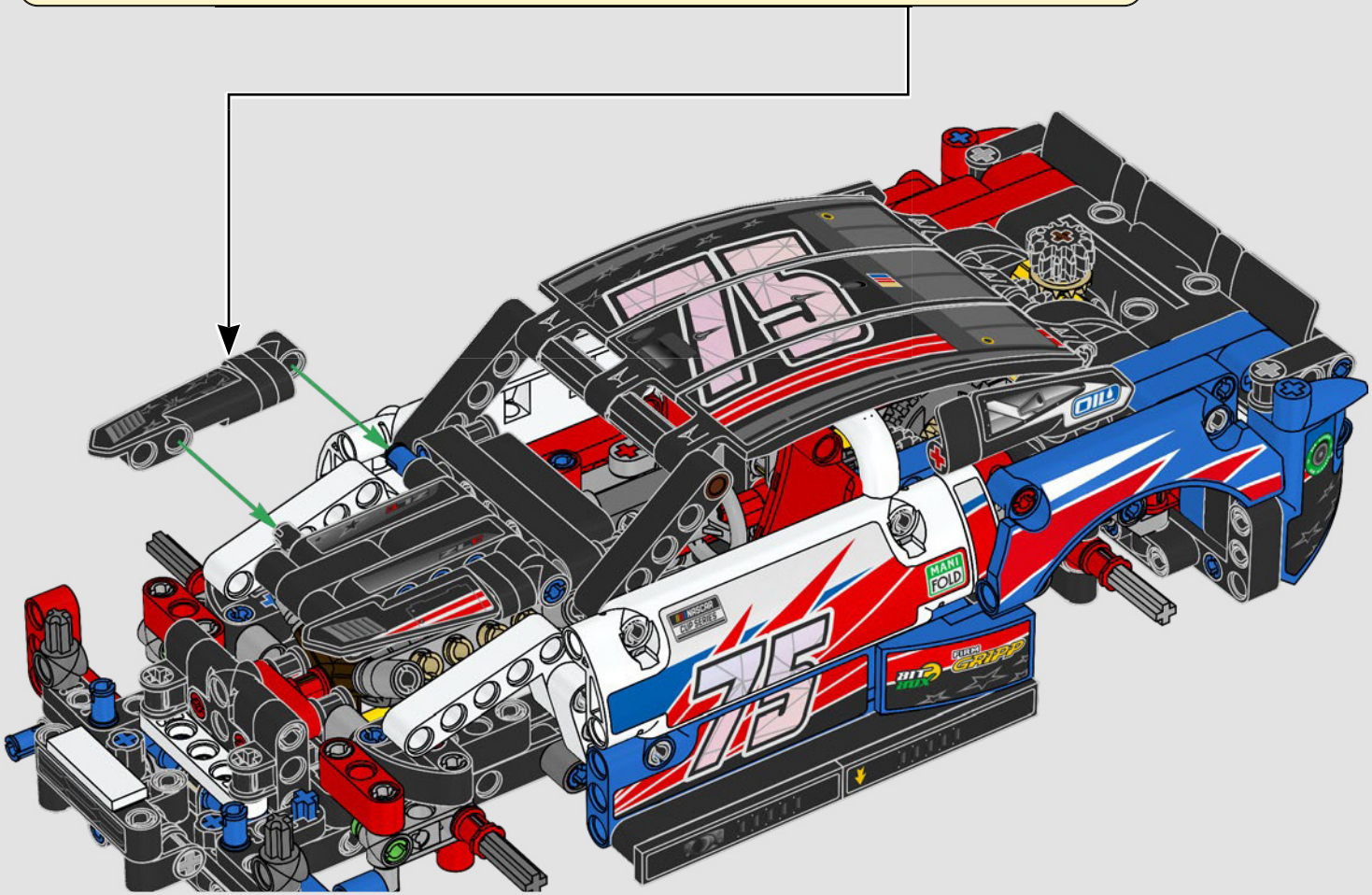

157

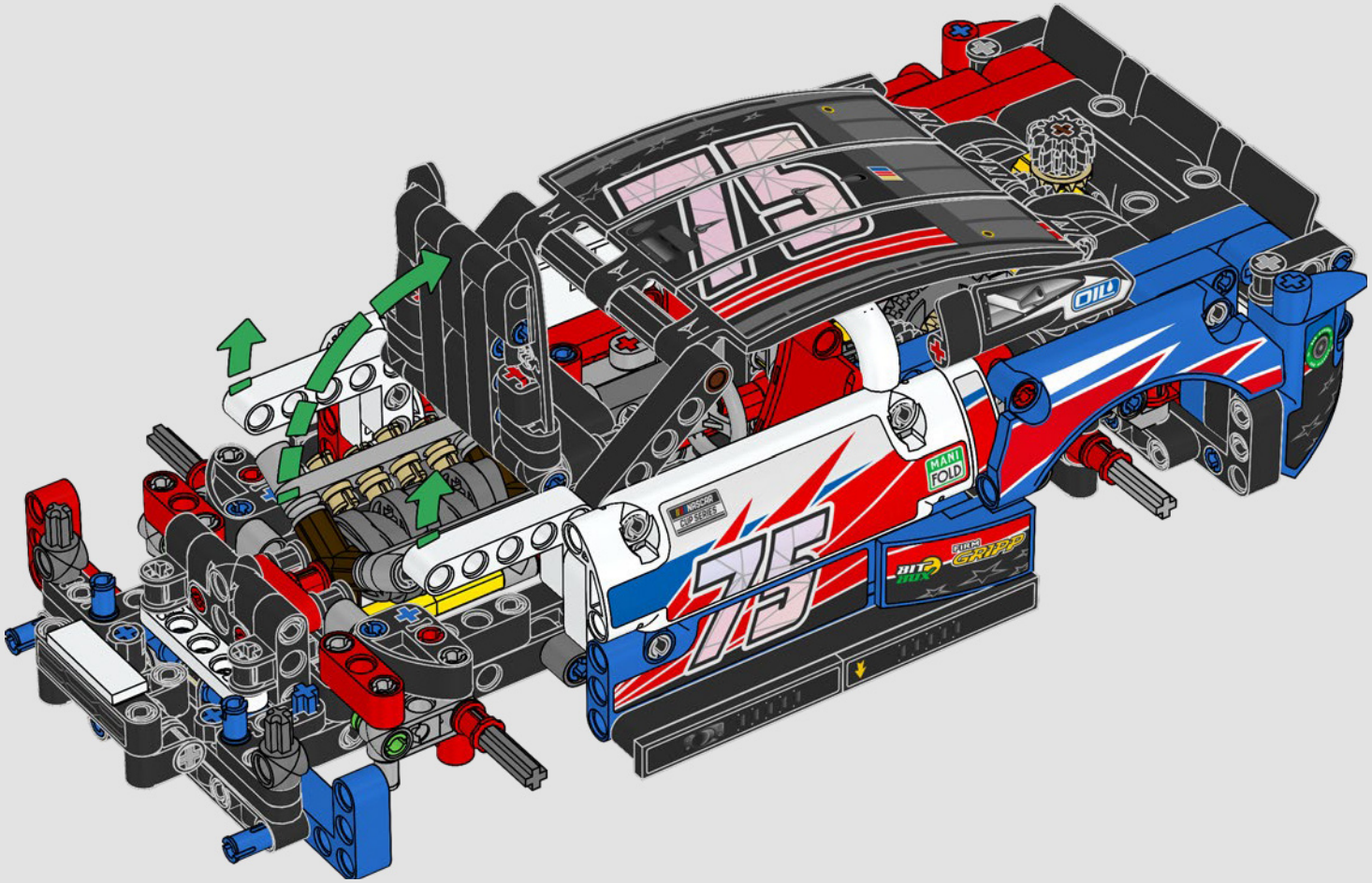

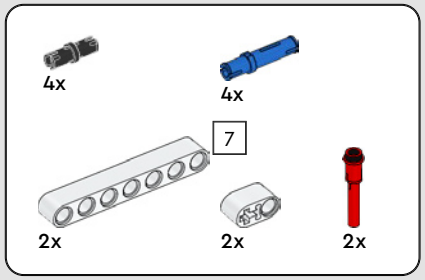

158

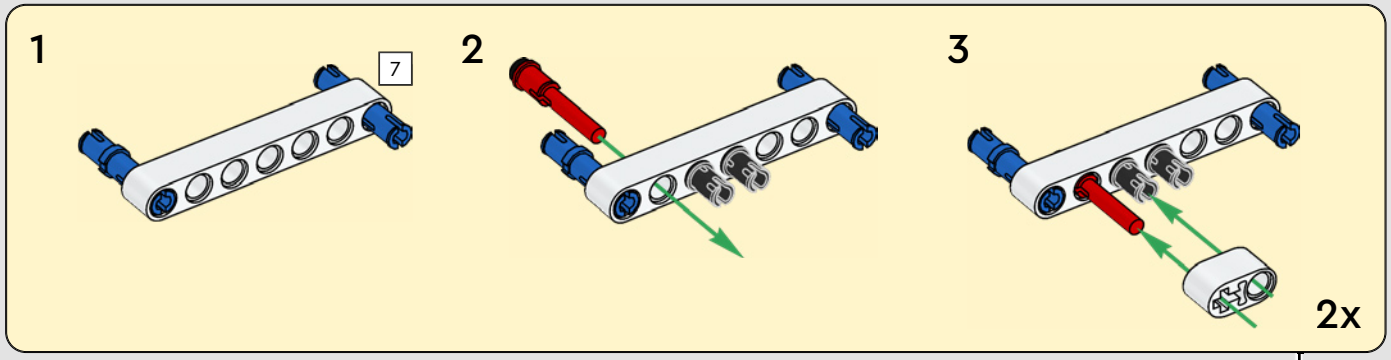

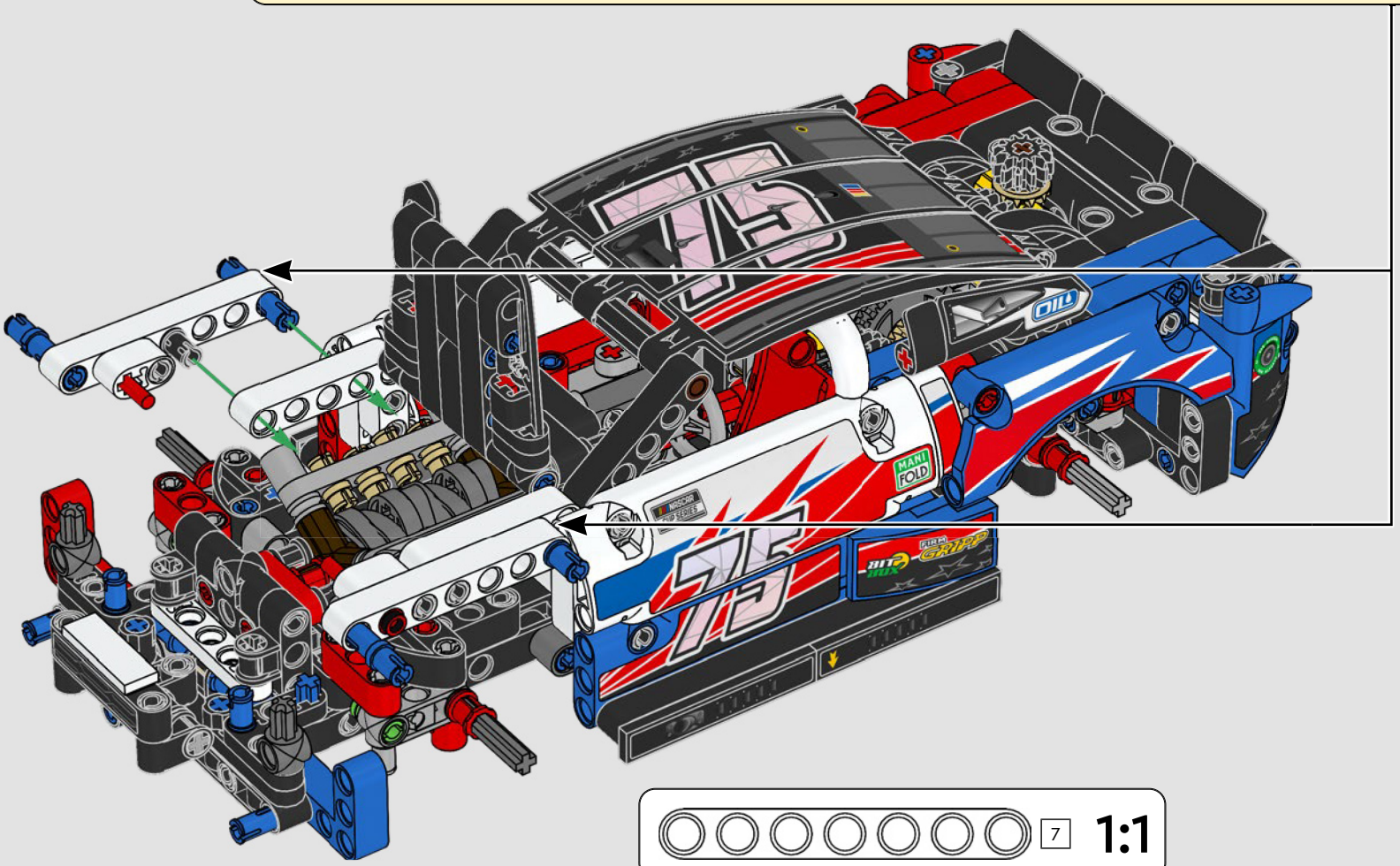

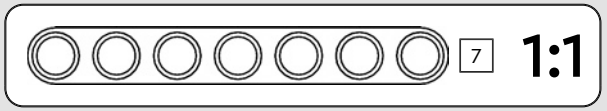

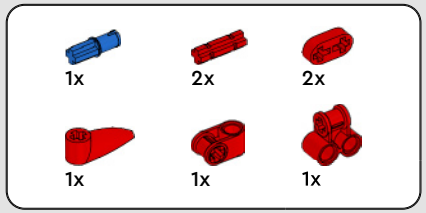

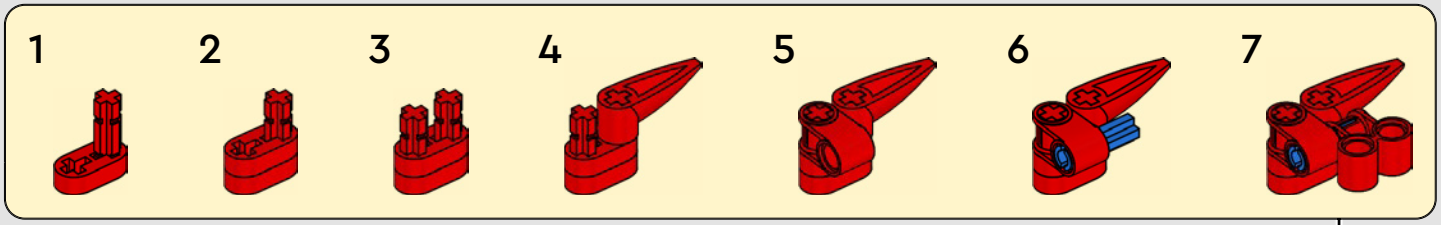

159

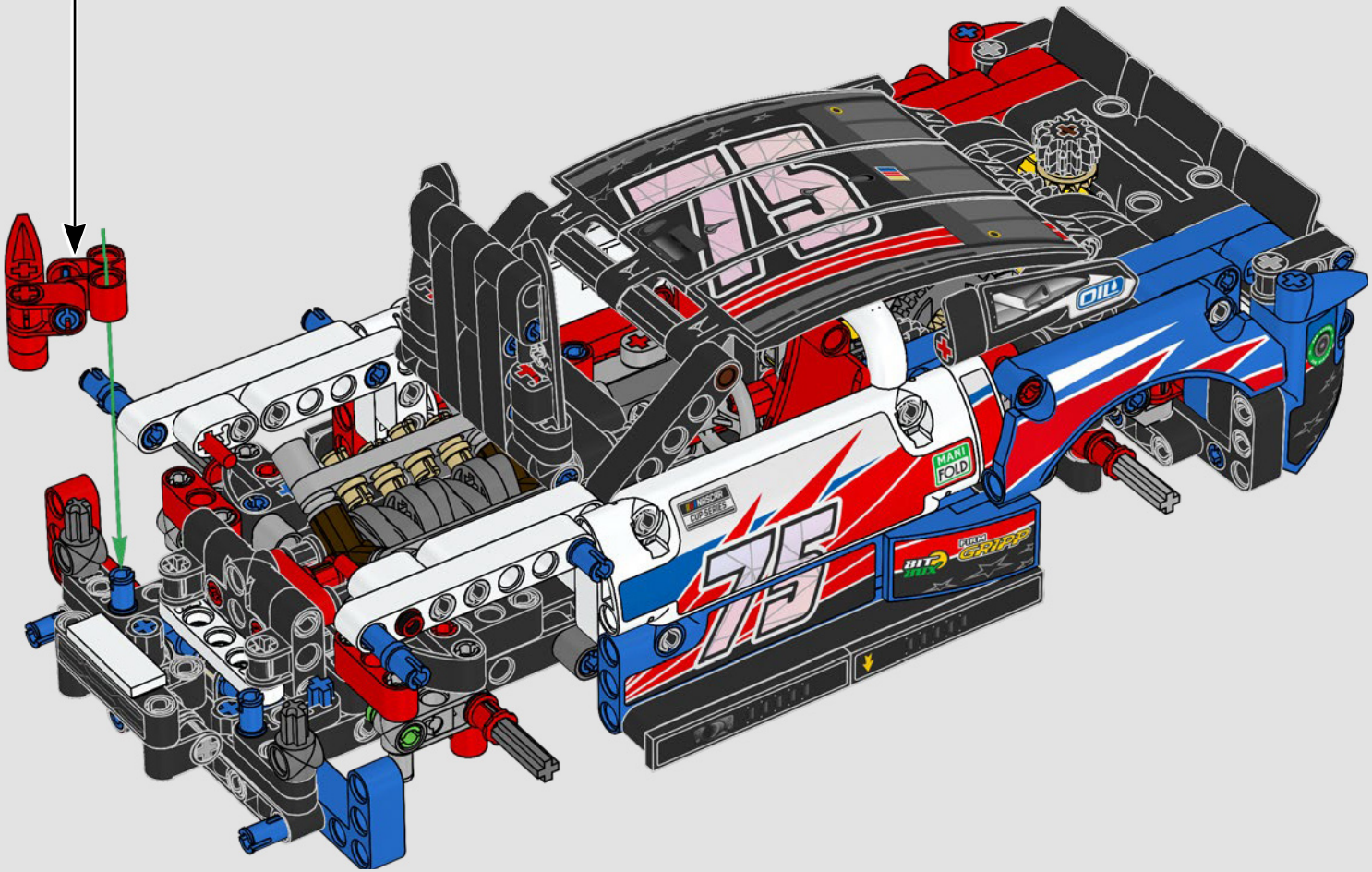

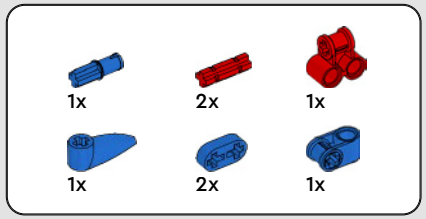

160

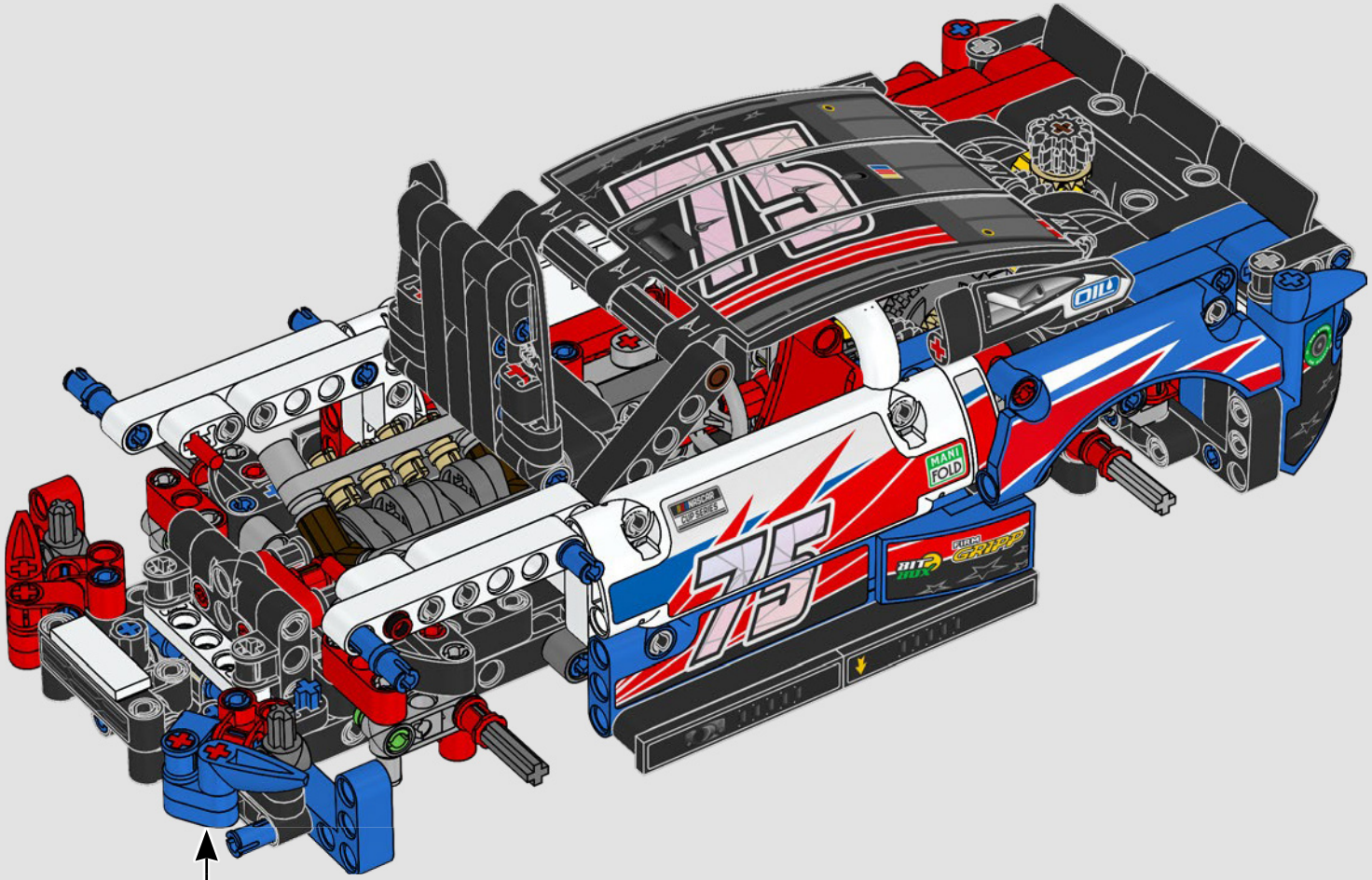

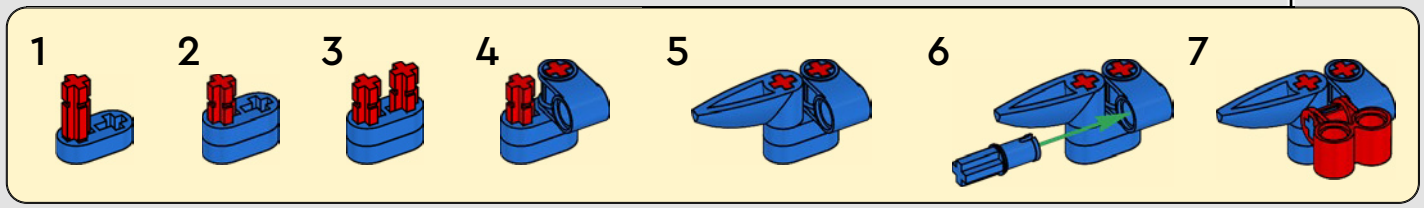

2x

161

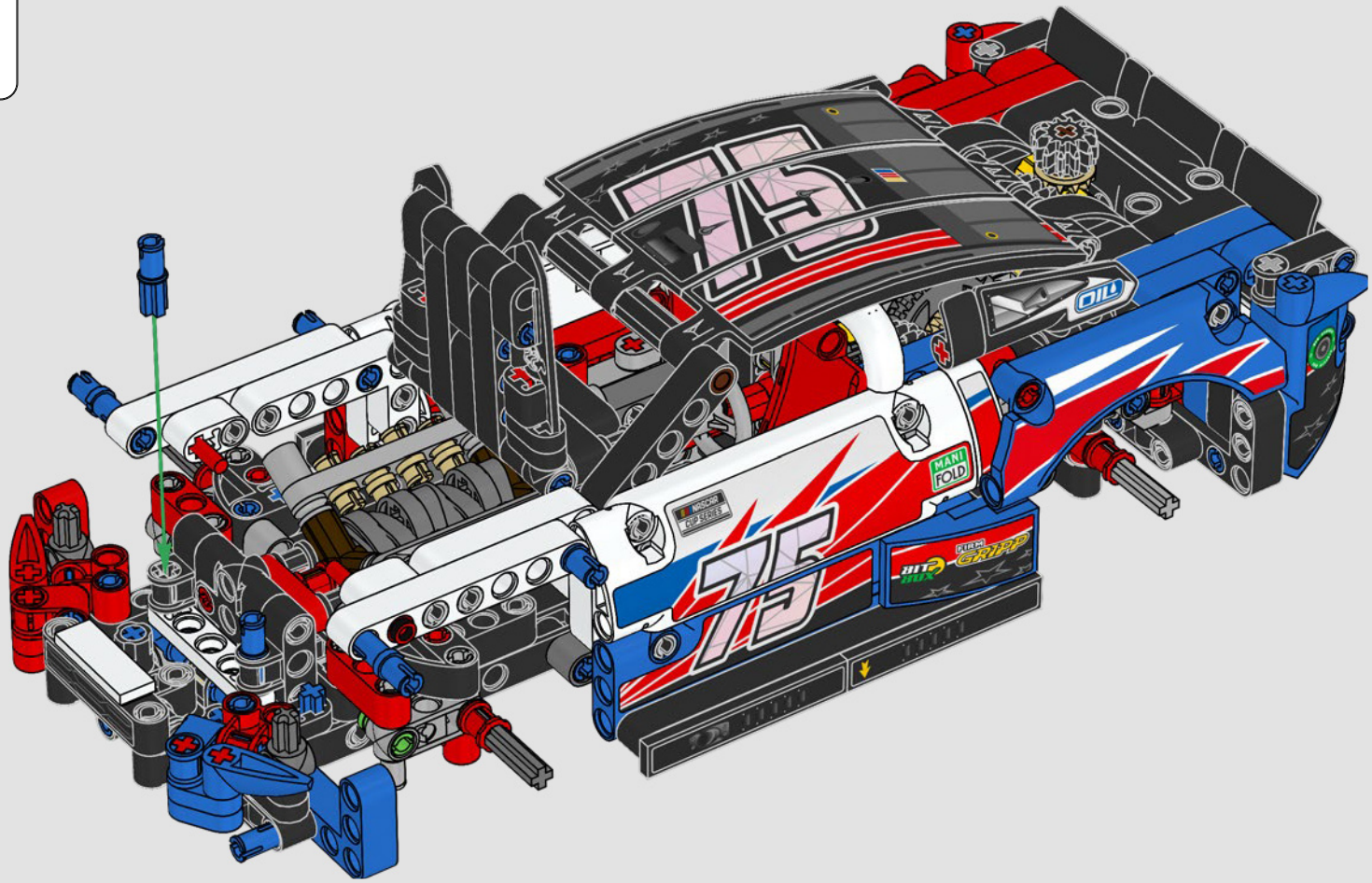

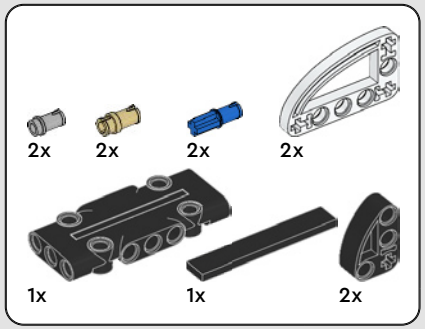

162

1

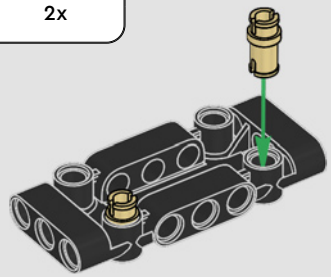

2

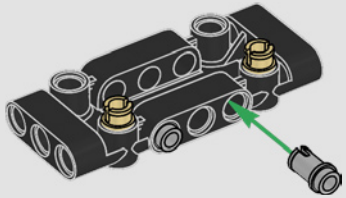

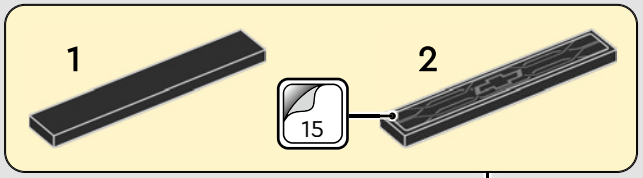

3

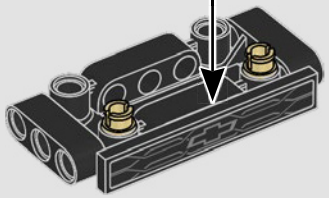

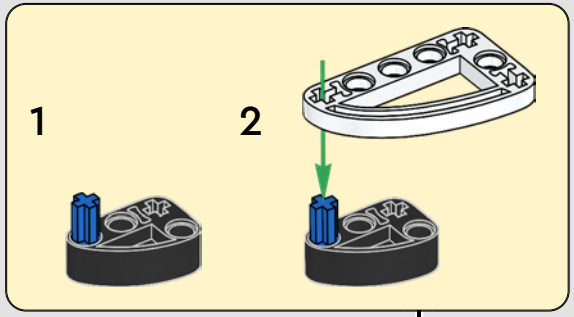

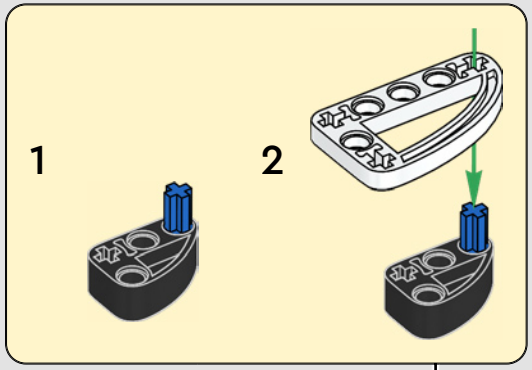

4

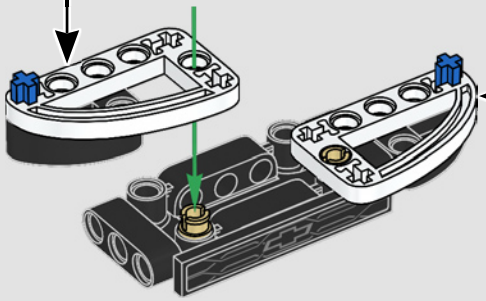

5

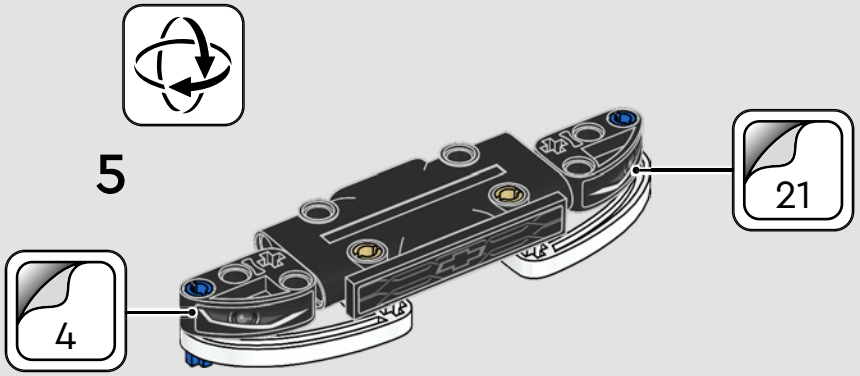

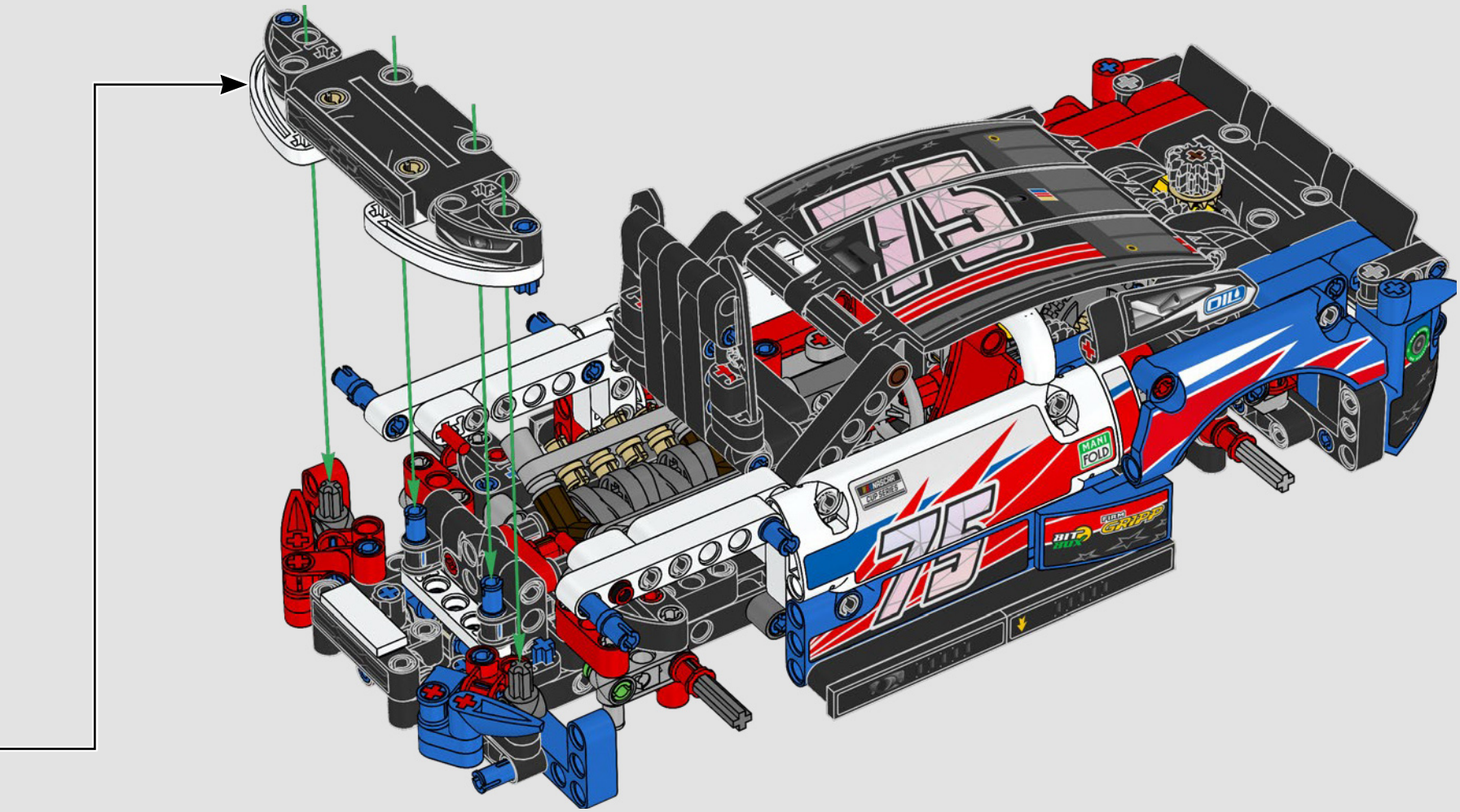
OIL
MANI FOLD
75

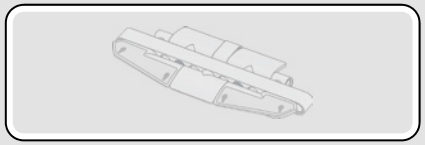

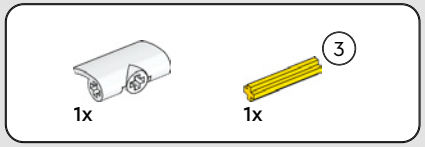

163

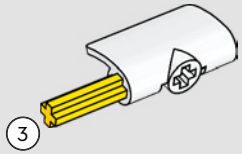

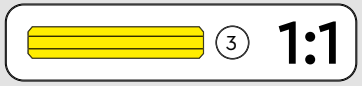

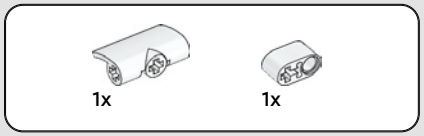

164

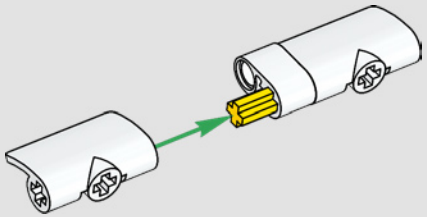

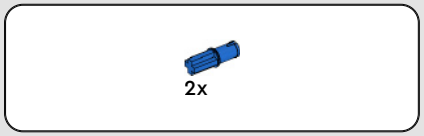

165

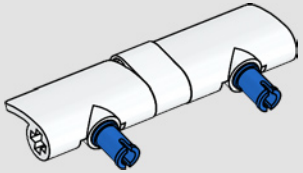

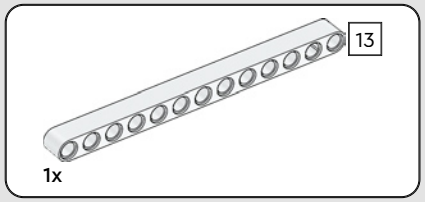

166

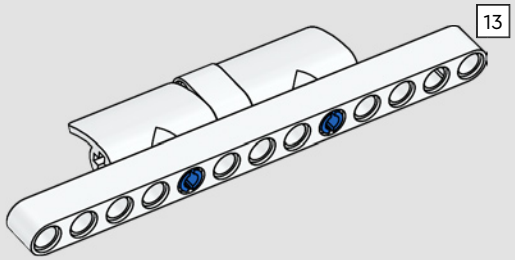

167

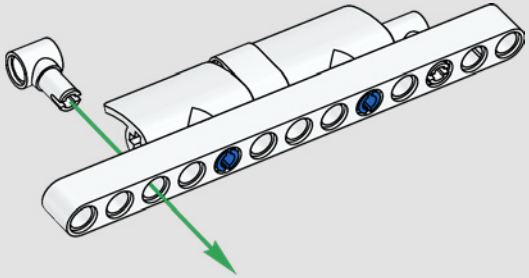

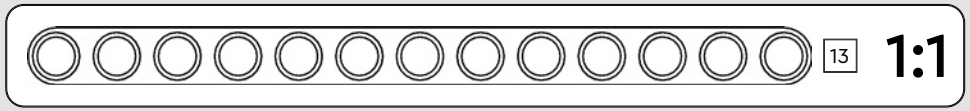

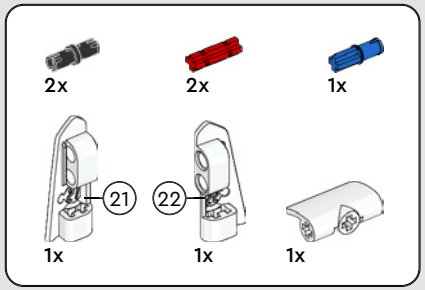

168

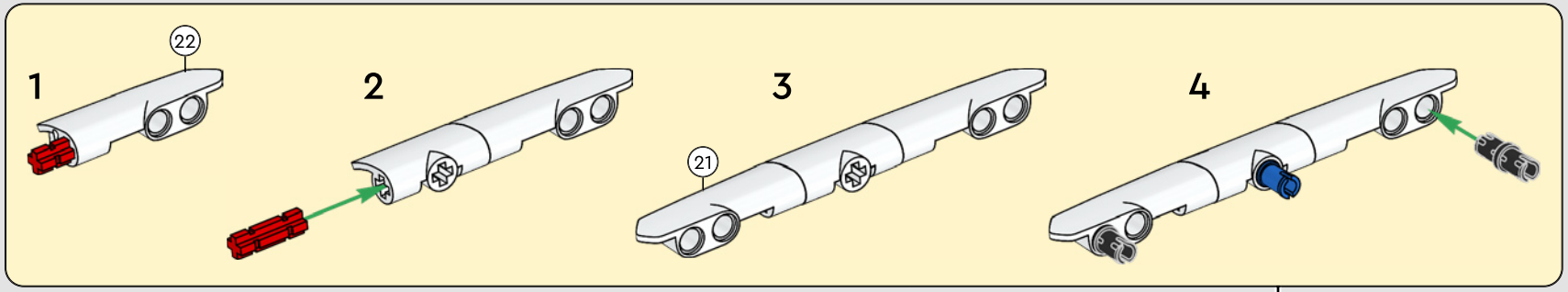

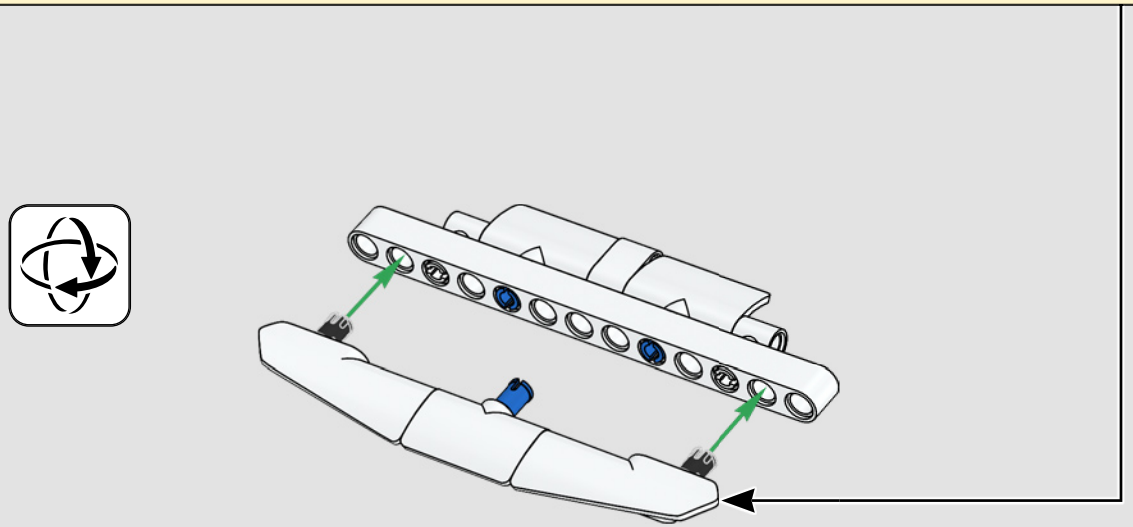

169

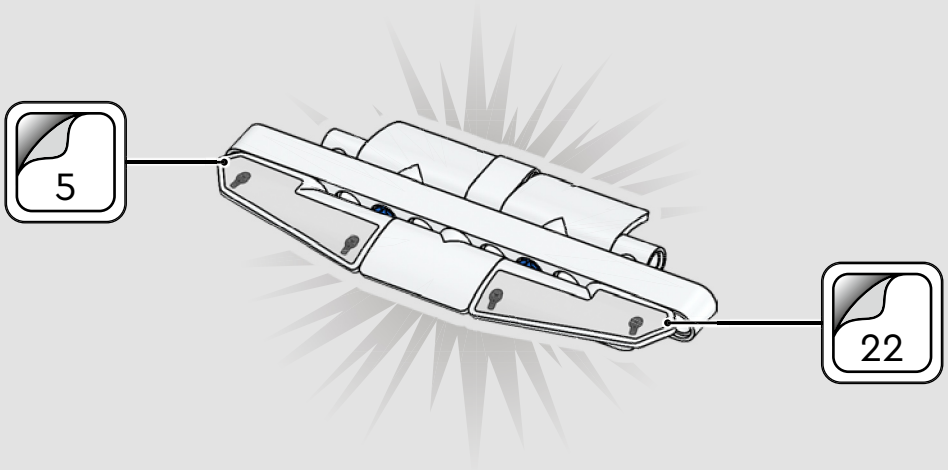

170

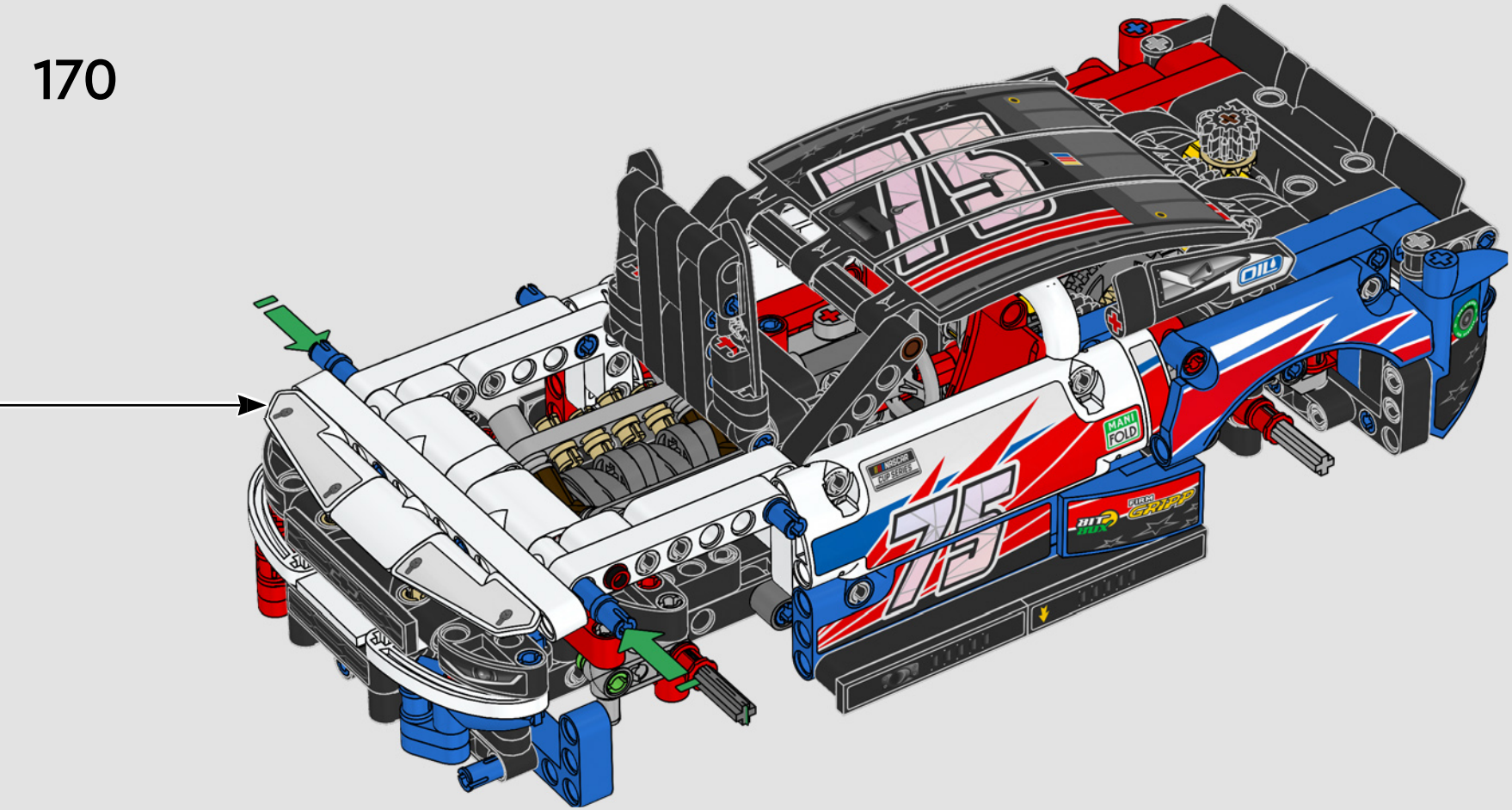

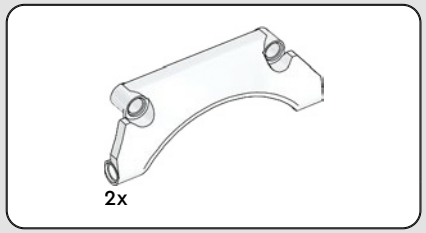

171

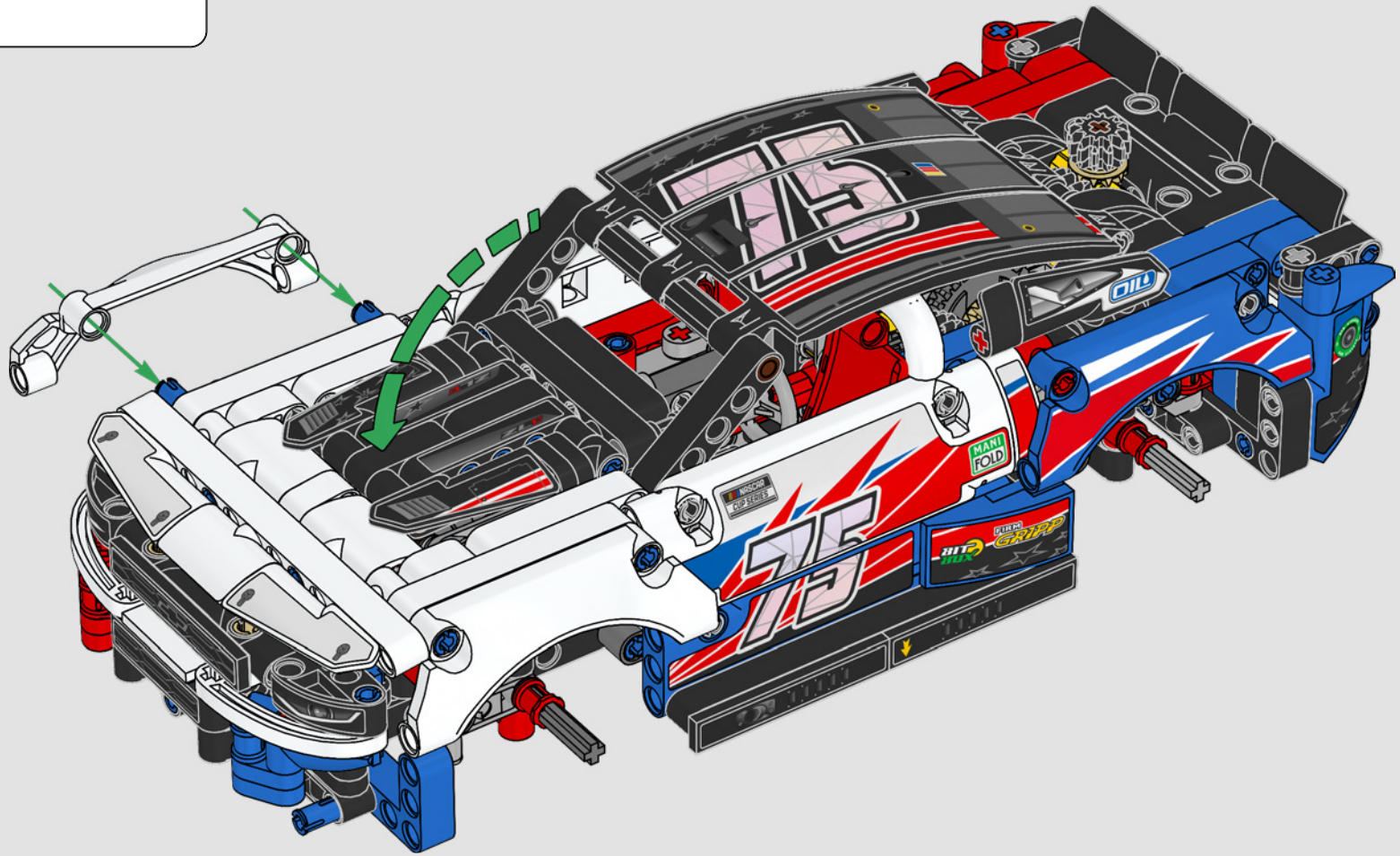

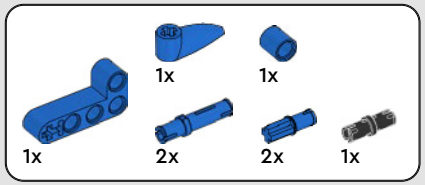

172

1

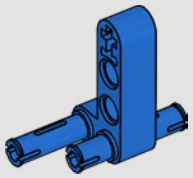

2

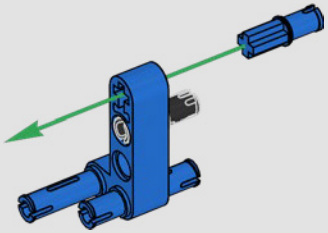

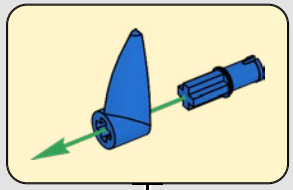

3

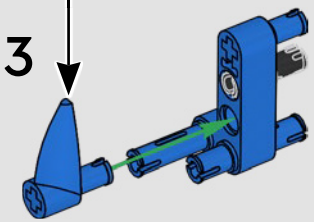

4

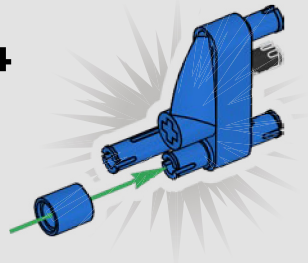

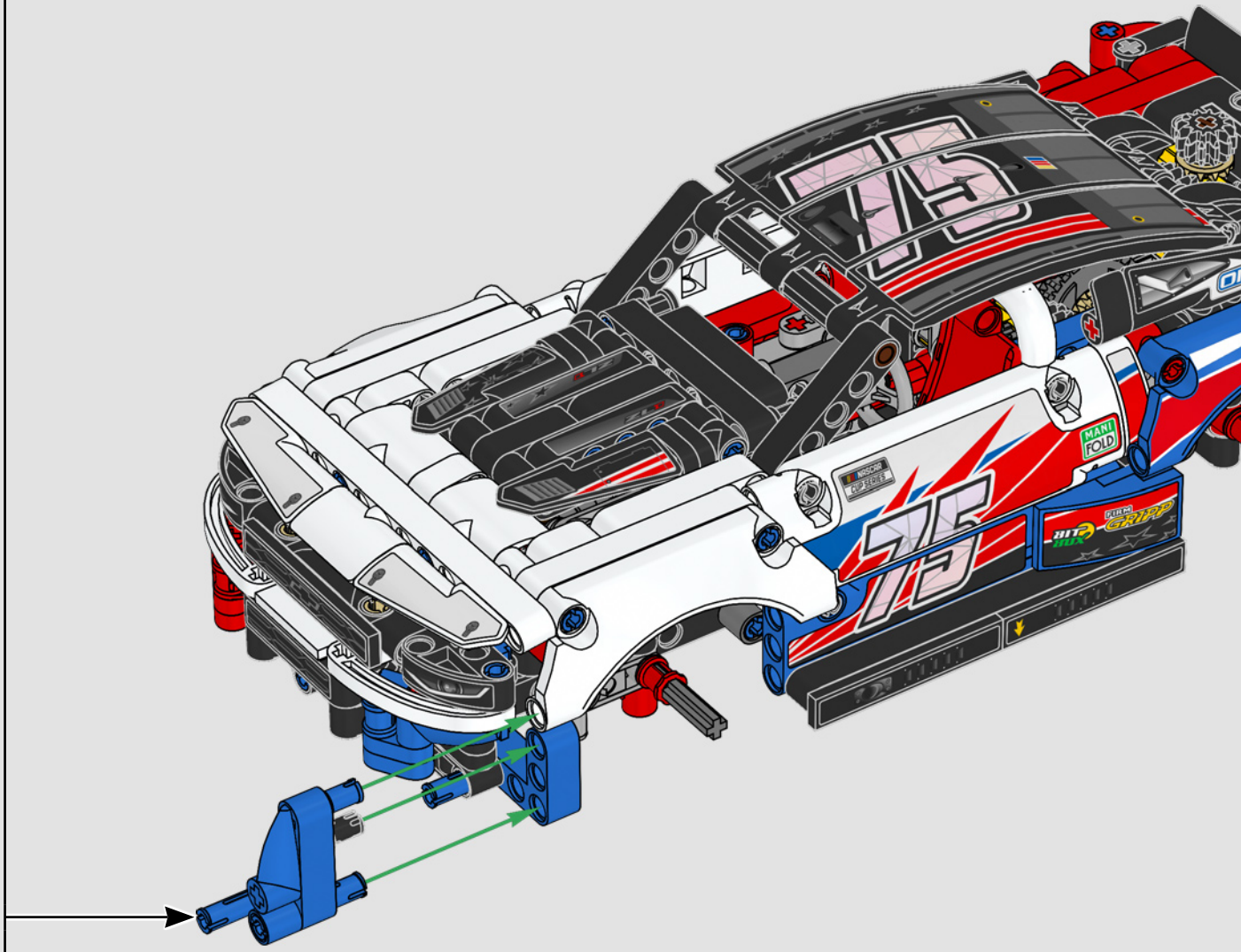

1x

173

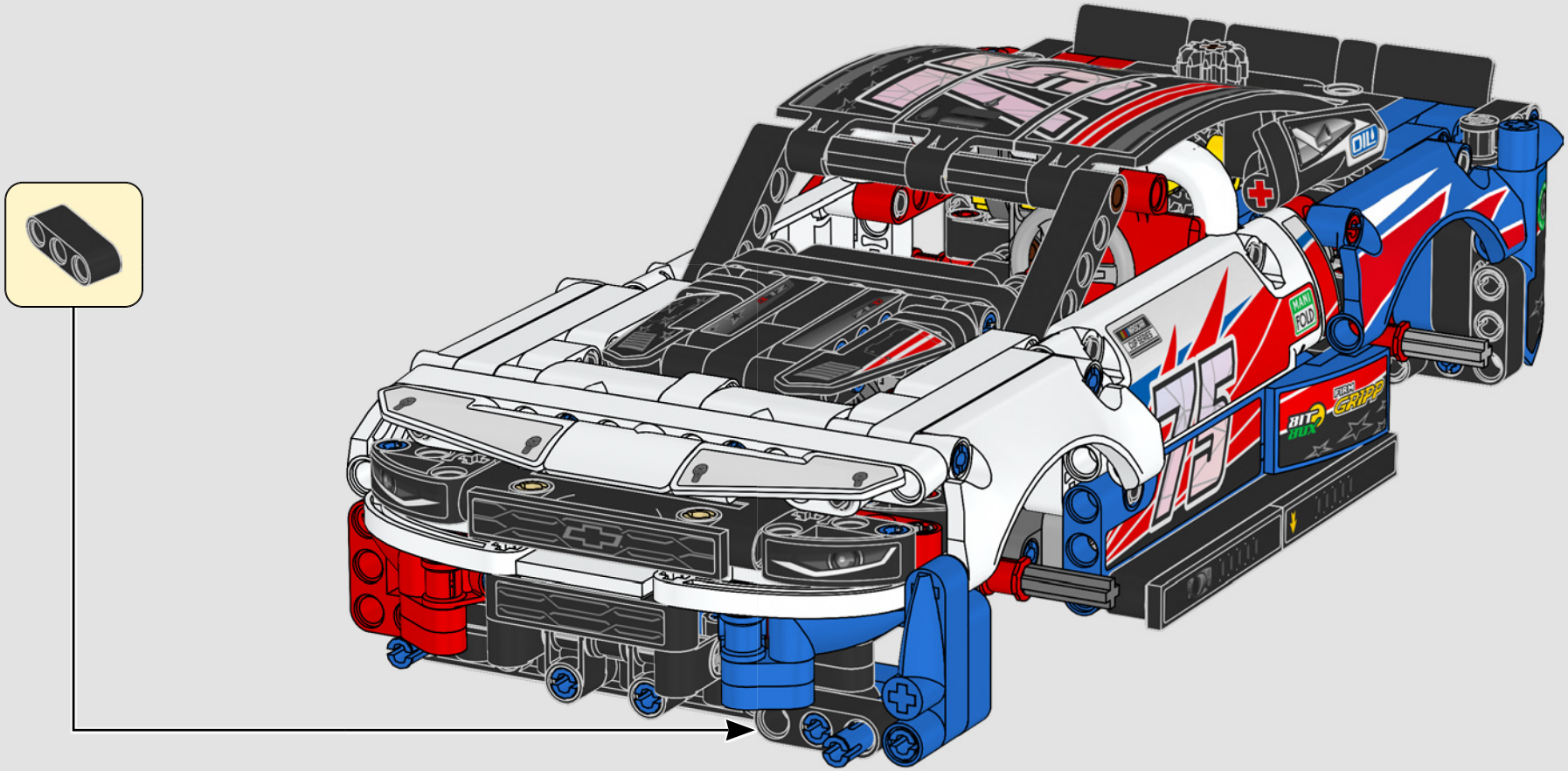

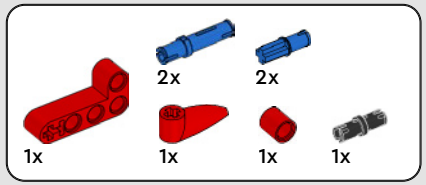

174

1

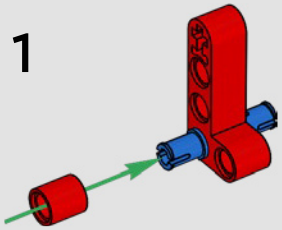

2

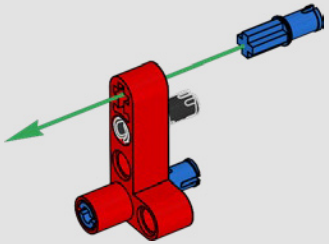

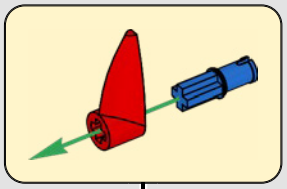

3

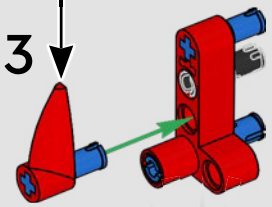

4

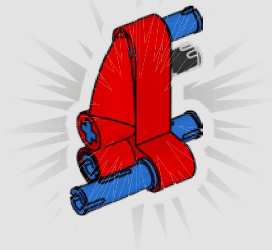

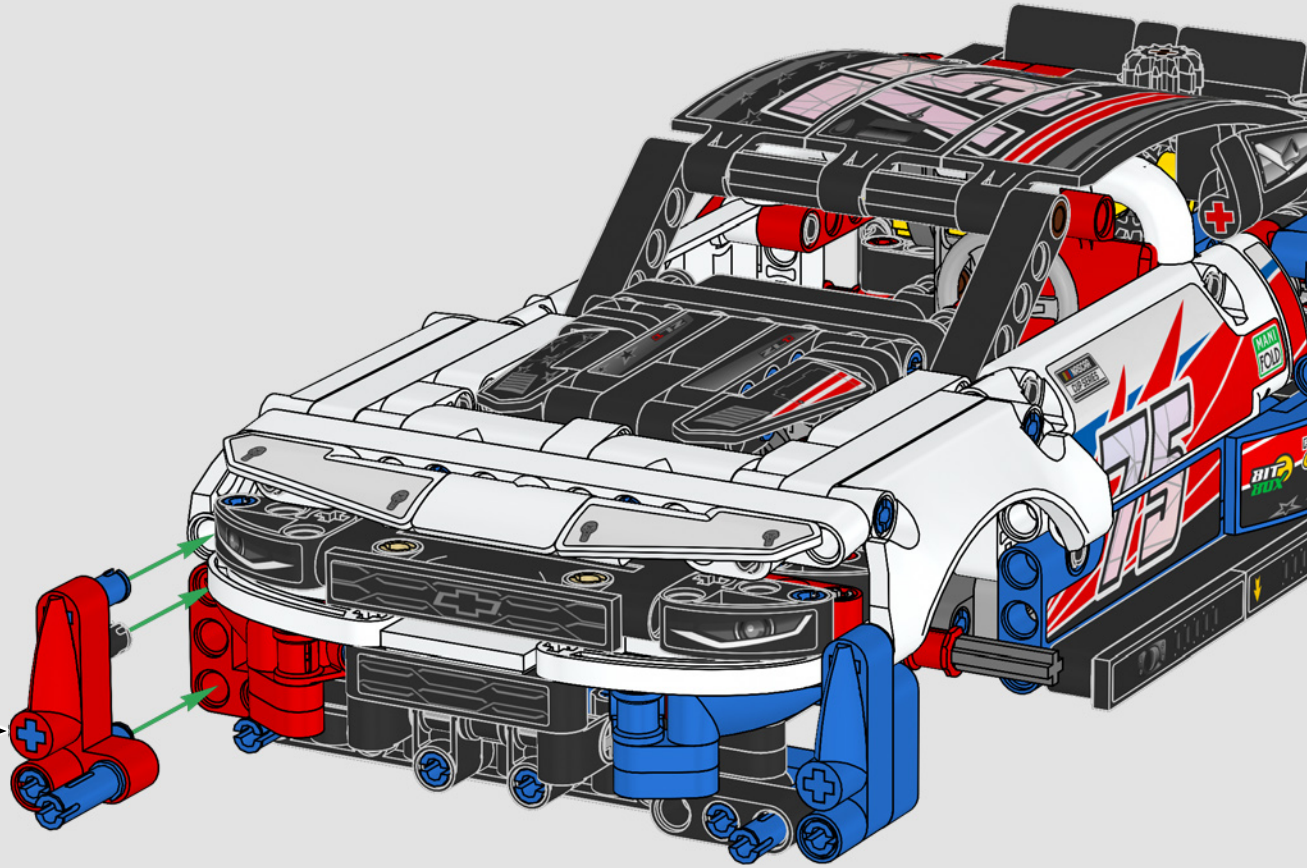

1x

175

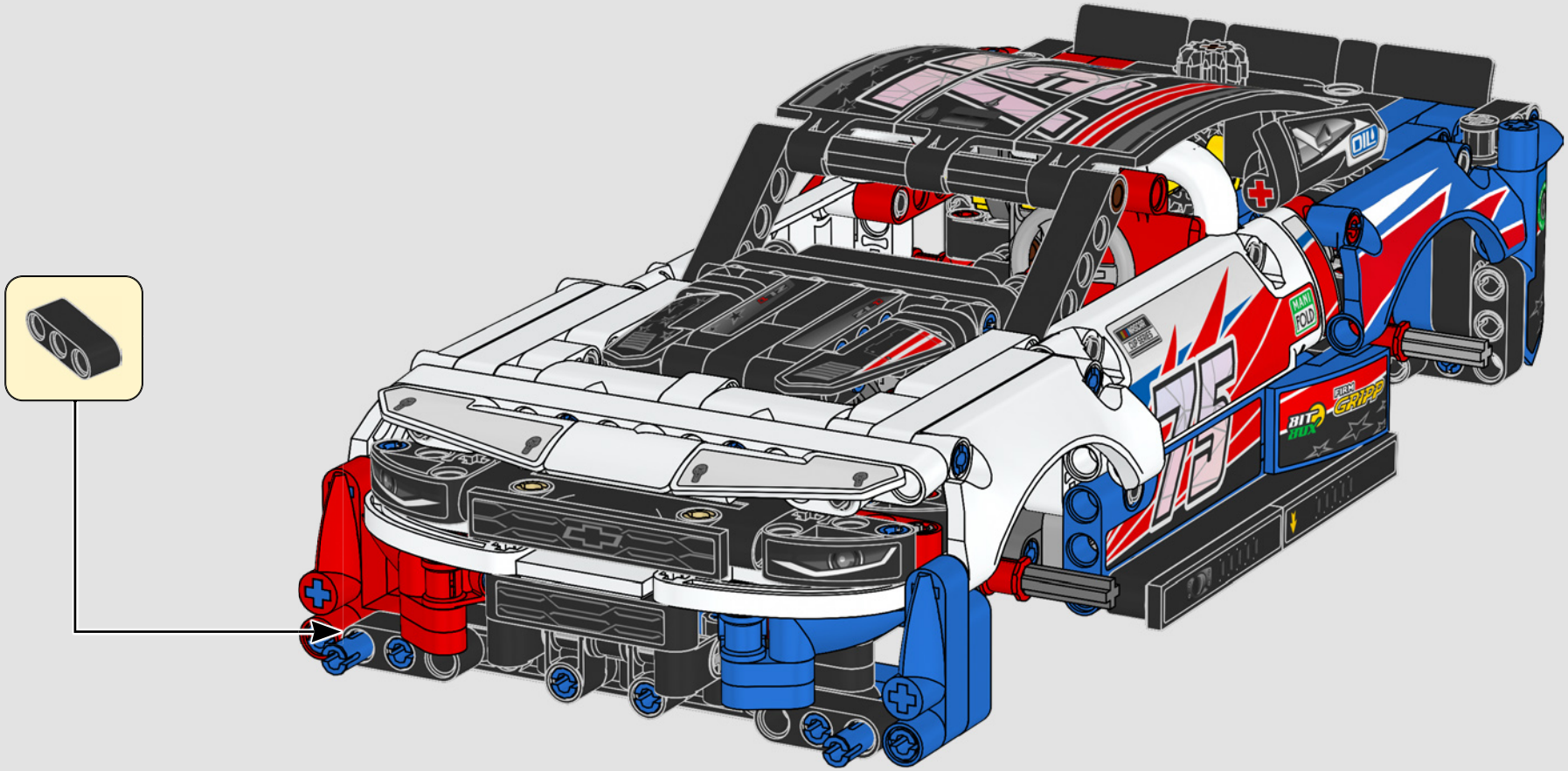

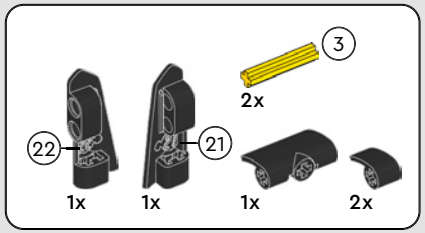

176

1

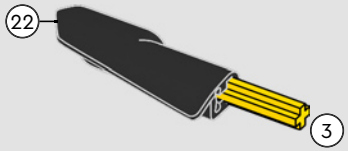

2

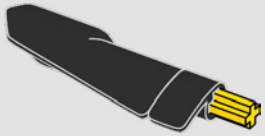

3

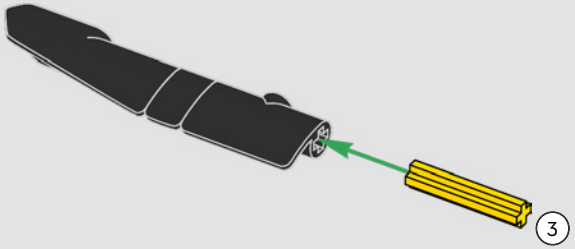

4

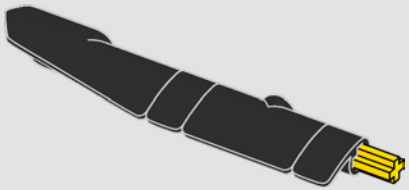

5

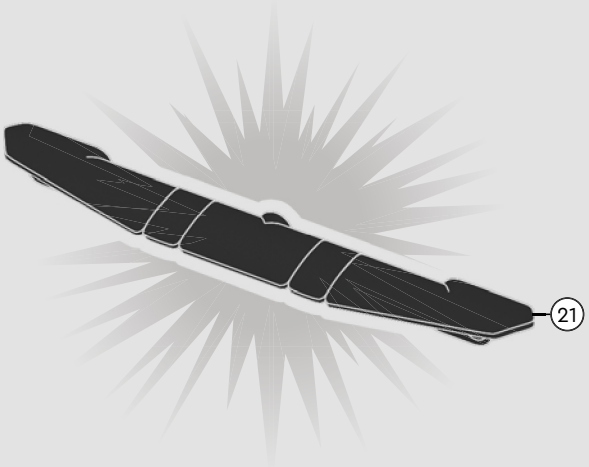

1:1

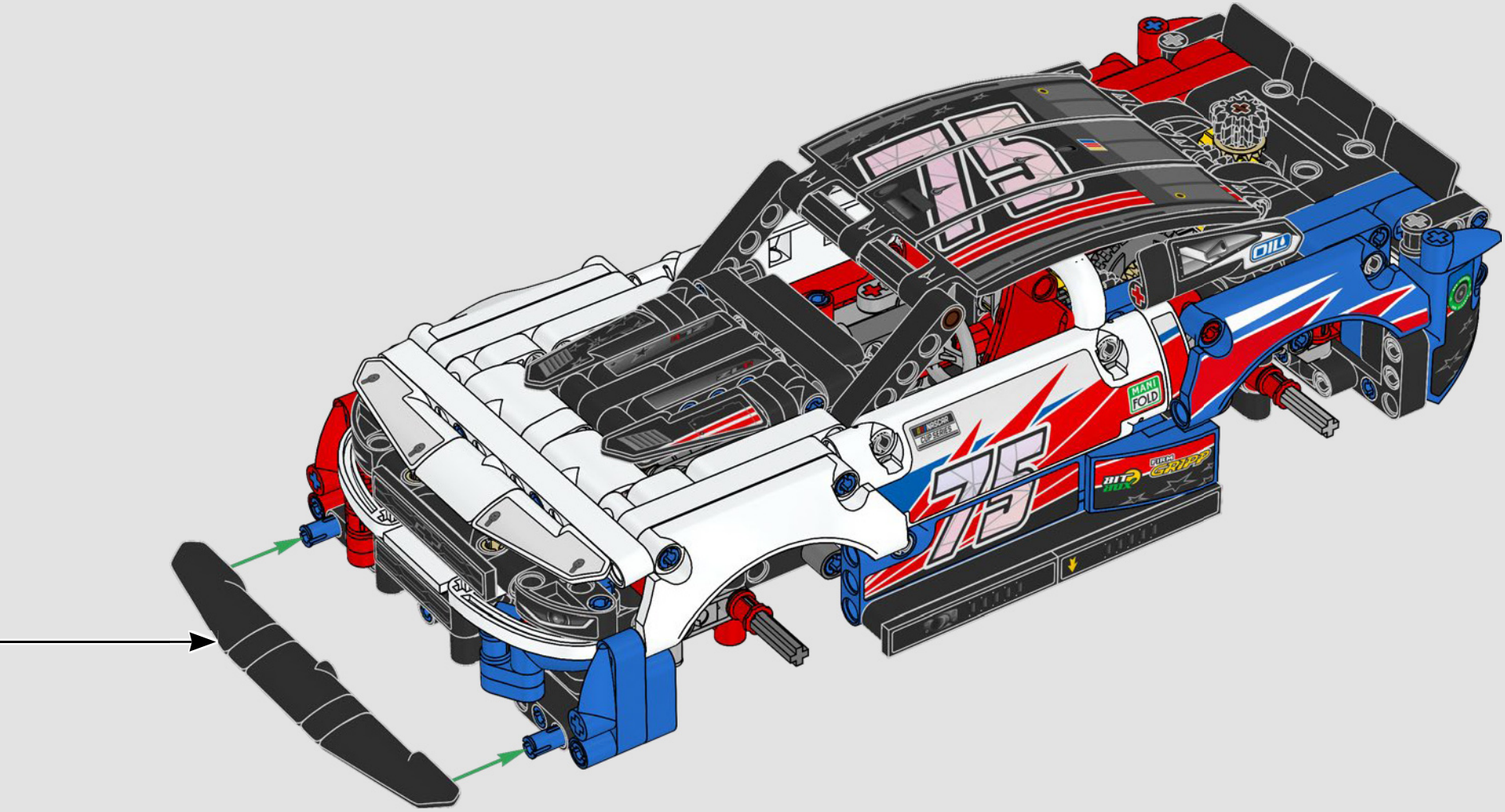
75
OIL
MANI FOLD
75

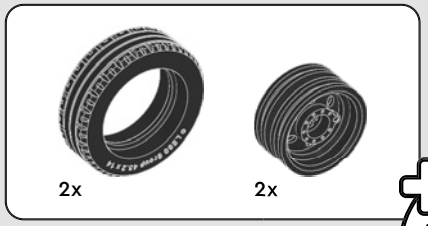

177

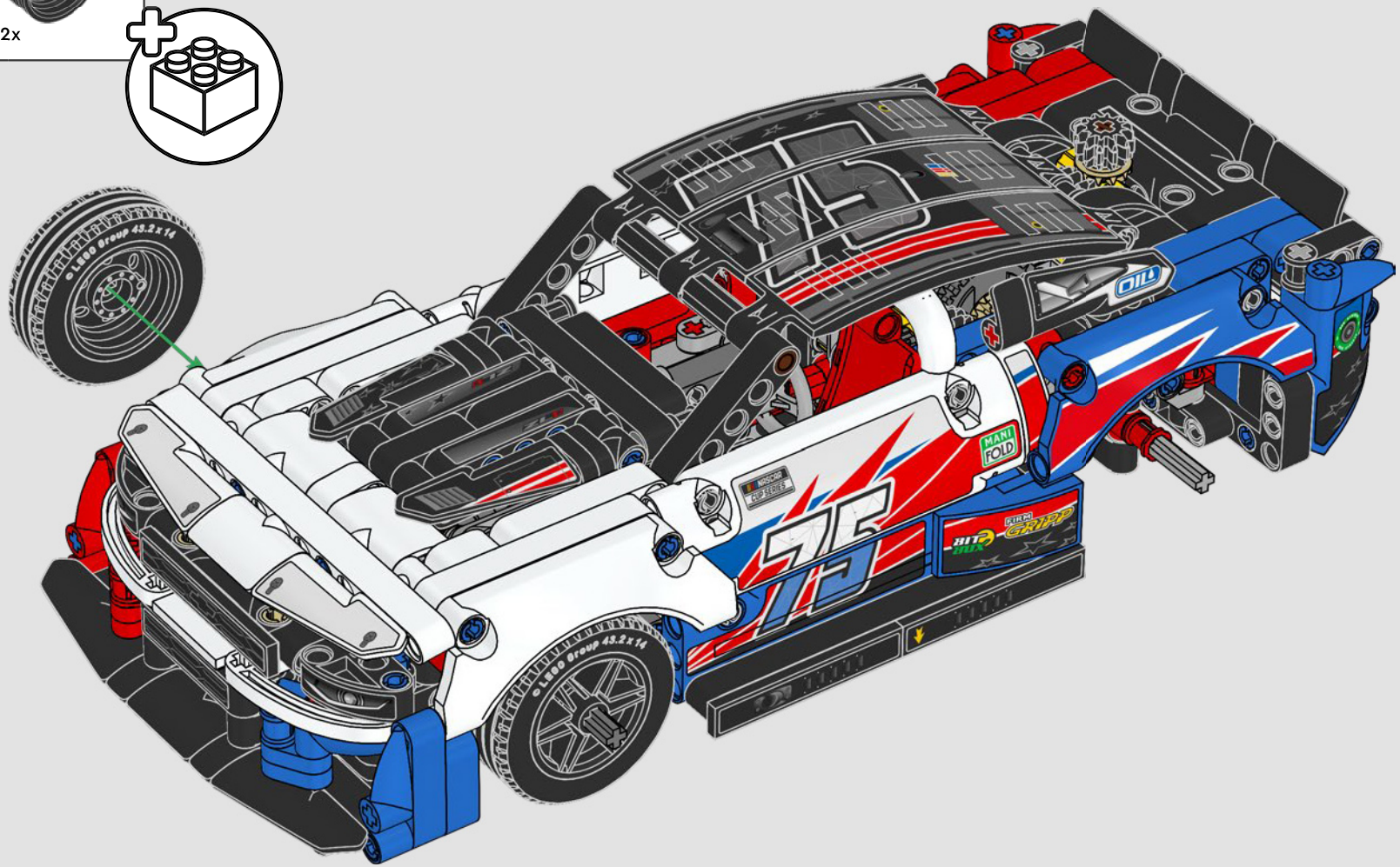

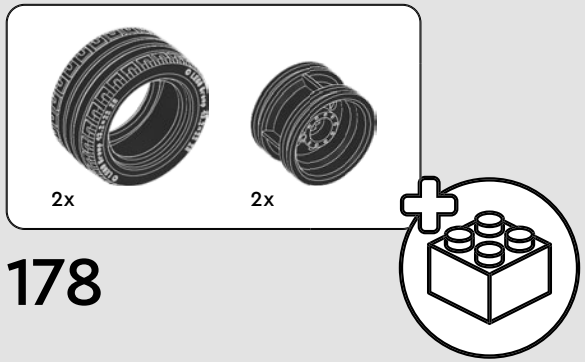

178

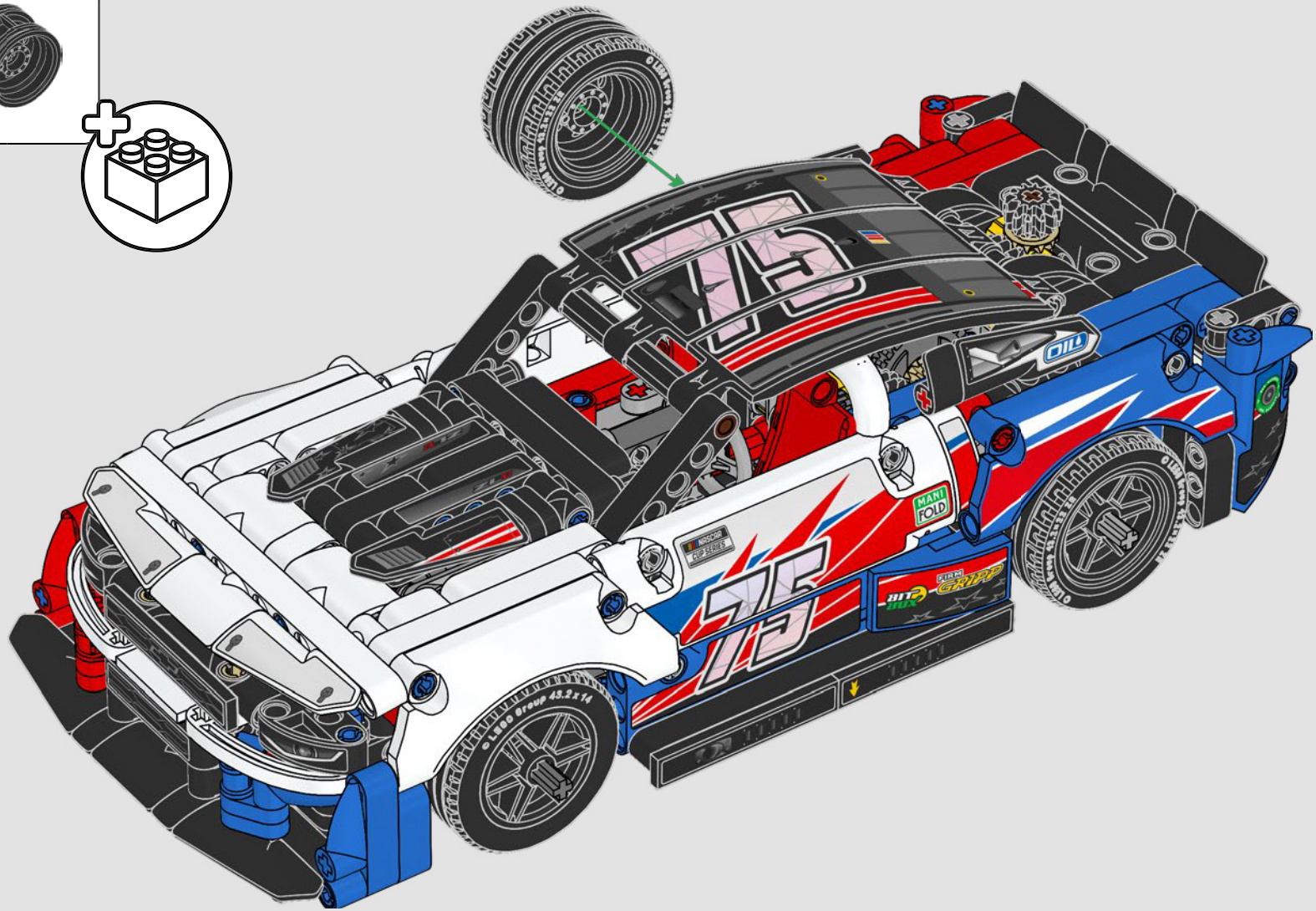

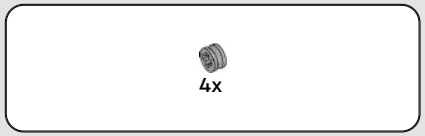

179

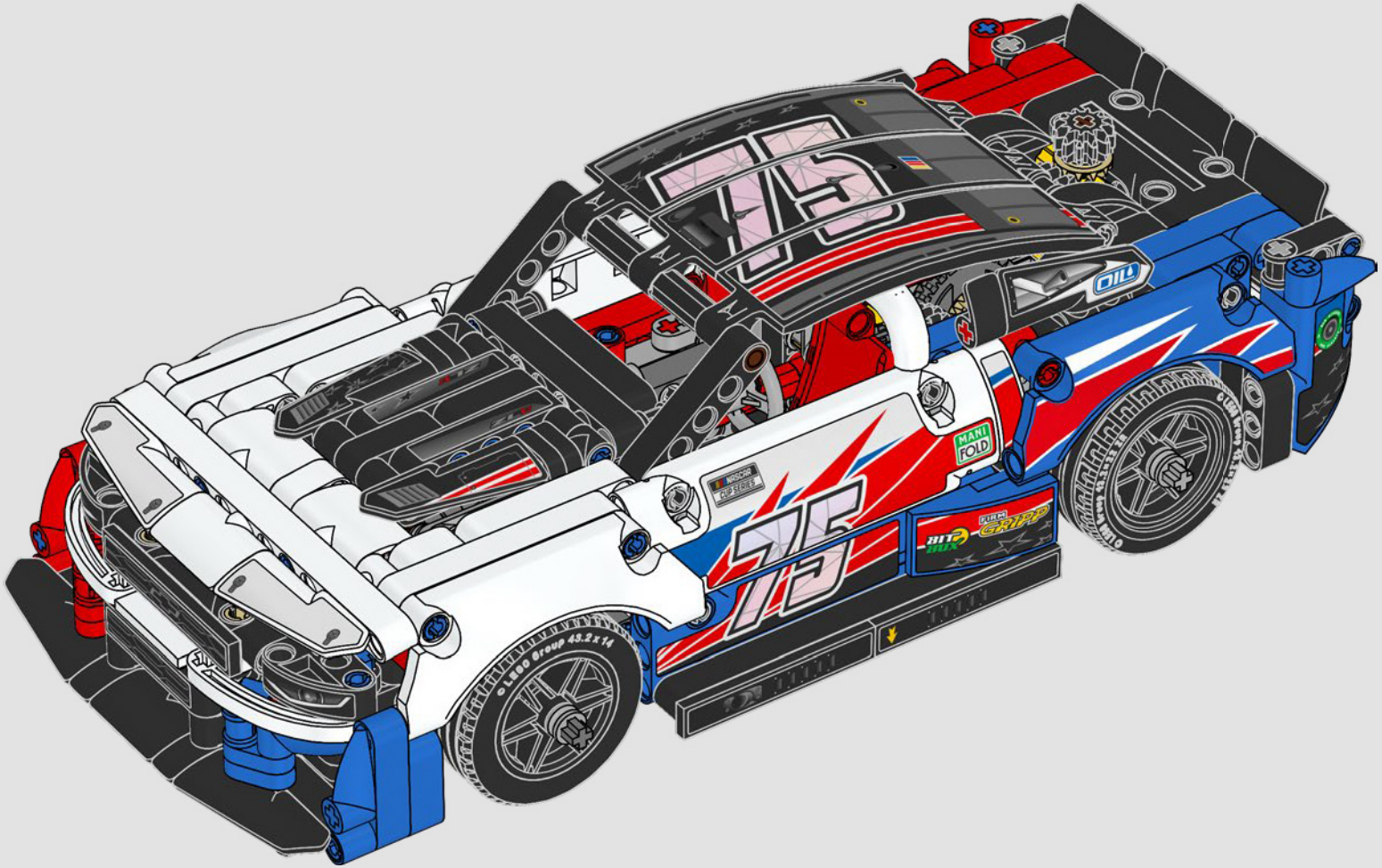

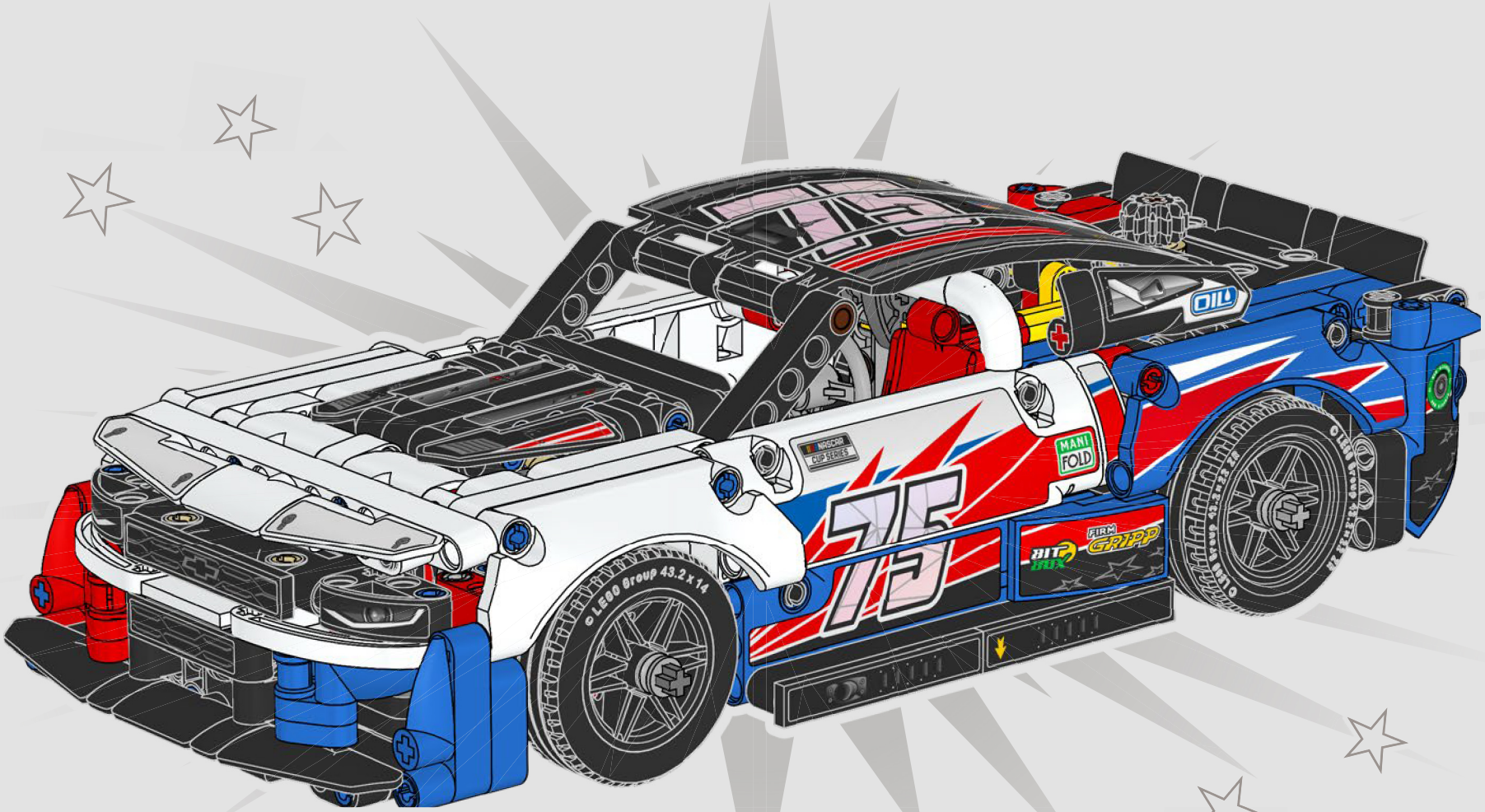
NASCAR
CUP SERIES
MANI FOLD
OIL
75
FIRM GRIPP
BIT BRIX
© LEGO Group 43.2 x 14

LEGO TECHNIC

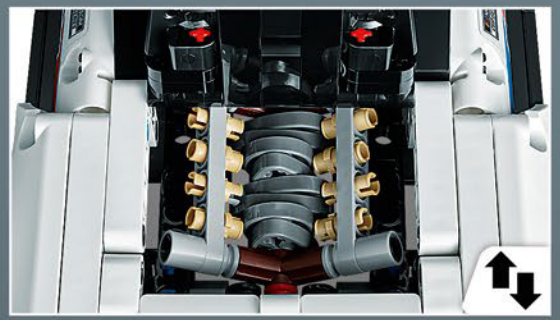

LEGO TECHNIC

6x
6282148

1x
6177114

22
1x
6343987

21
1x
6330084

2x
6194851

3x
6265135

6x
6345327

3x
6173116

1x
4558168

3x
6334548

2x
6430835

1x
6360069

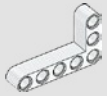
2x
4585040

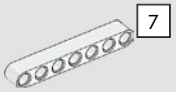
7
2x
4495927

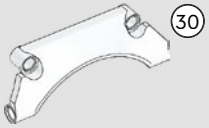
30
2x
6254784

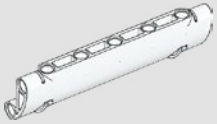
2x
6004137

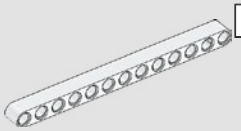
13
1x
4620671

2x
6350694

5x
6223427

10x
6271820

2x
6332580

5x
6323573

2x
6371442

1x
6093950

2x
6360104

1x
6261373

21x
4142865

1x
6390264

4x
6280393

1x
302321

3x
6285599

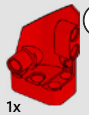
2
1x
6138746

1x
302221

6x
6209519

5x
4153718

3x
6273211

4
4x
6129995

1x
6271827

1x
4613174

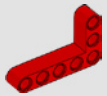
2x
4143154

1x
6285602

8
1x
6130004

30
1x
6426361

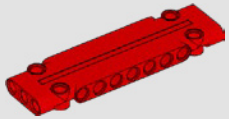
1x
6224922

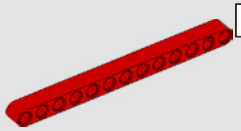
13
1x
4522938

1x
6392879

3x
6396479

2x
6360123

2x
6323908

1x
6261383

38x
4206482

1x
6392955

1x
302323

3x
6336385

55x
6299413

1x
302223

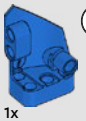
1
1x
6330923

1x
6271829

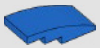
1x
6429287

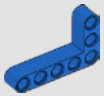
2x
4158923

30
1x
6426360

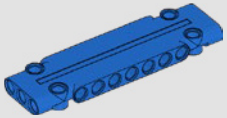
1x
6057722

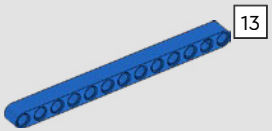
13
1x
6302337

6x
4519010

2x
4119474

3
17x
6130007

3x
6344325

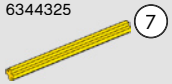
7
1x
6130009

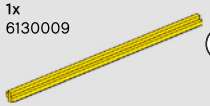
11
1x
6130012

2x
6284699

10x
6282140

2x
6121485

2x
302426

4x
307026

1x
4177431

4x
6338428

22
3x
6319983

8x
6396456

5x
6261371

21
3x
6316923

2x
6253260

4x
6265091

6x
6326047

2x
4512363

4x
3200026

2x
6346535

2x
6271810

19x
6273708

7x
6089119

4x
6321745

5x
6362991

4x
4142822

1x
6265644

7x
6331026

2x
6331570

2x
6271825

2x
6251174

2x
4299389

4x
4142823

5
9x
4142135

3x
6350415

2x
6182551

103x
6279875

1x
4558170

5x
663626

2x
4184286

1x
6327430

7
1x
4495935

2x
6331935

11
2x
6330585

11
2x
6029578

4x
6208345

1x
6265643

9x
6271165

12x
4211483

7x
6183784

10x
6261375

2x
4211807

6x
6123815

4x
6349478

2x
6279023

7x
6276969

6x
4552348

2x
6282158

1x
4580510

5
9x
4211639

2x
6170293

7
2x
4495930

1x
4540797

2x
6301284

1x
6391159

2x
6273219

4x
6254248

4x
4565452

10x
6013938

3
3x
6135494

5
2x
6159763

2x
6012451

10x
4210759

3x
6167281

4
5x
6083620

1x
4525184

13
1x
4522937

15
2x
4542576

YOU COULD

WIN

Scan this QR code or go to **LEGO.COM/PRODUCTFEEDBACK** and give us your short feedback about this LEGO® set for a chance to win a cool LEGO prize.

Terms and Conditions apply*

DE: Du könntest GEWINNEN. Es gelten die Teilnahmebedingungen* **FR: Tu pourrais GAGNER.** Des conditions s'appliquent* **IT: Potresti VINCERE tu.** Termini e condizioni sono applicabili* **ES: Puedes GANAR.** Aplican términos y condiciones* **PT: Poderá GANHAR.** Aplicam-se termos e condições* **JA:** プレゼント付き! 利用規約が適用されます* **ZH:** 轻松获奖. 条款和条件适用* **KO:** 상품의 주인이 되어보세요. 소정의 약관이 적용됩니다* **RU: Вы можете ВЫИГРАТЬ.** Действуют положения и условия* **PL: Szansa na WYGRANĄ.** Obowiązują warunki korzystania* **CS: Máte šanci VYHRÁT.** Platí všeobecné smluvní podmínky* **SK: Máte šancu VYHRAŤ.** Platia všeobecné zmluvné podmienky* **HU: TE IS NYERHETSZ.** Felhasználási feltételek érvényesek* **RO: Ai putea CÂȘTIGA.** Se aplică termeni și condiții* **BG: Можете да СПЕЧЕЛИТЕ.** Има определени правила и условия* **LV: Tu vari LAIMĒT.** Ir spēkā noteikumi un nosacījumi.* **ET: Sul on võimalus VÕITA.** Kehtivad tingimused* **LT: Jūs galite LAIMĖTI.** Taikomos sąlygos*

**LEGO.com/productfeedback-terms*

LEGO and the LEGO logo are trademarks of the LEGO Group. ©2023 The LEGO Group.
General Motors Trademarks used under license to the LEGO Group.
NASCAR® is a registered trademark of the National Association for Stock Car Auto Racing, LLC.

6456538