LEGO

McLaren

FORMULA 1 TEAM

Booklet available in English on
Heft in deutscher Sprache erhältlich auf
Livret disponible en français sur
Libretto disponibile in Italiano su
Folleto disponible en español en
如需中文版手册，请访问

McLAREN 2022

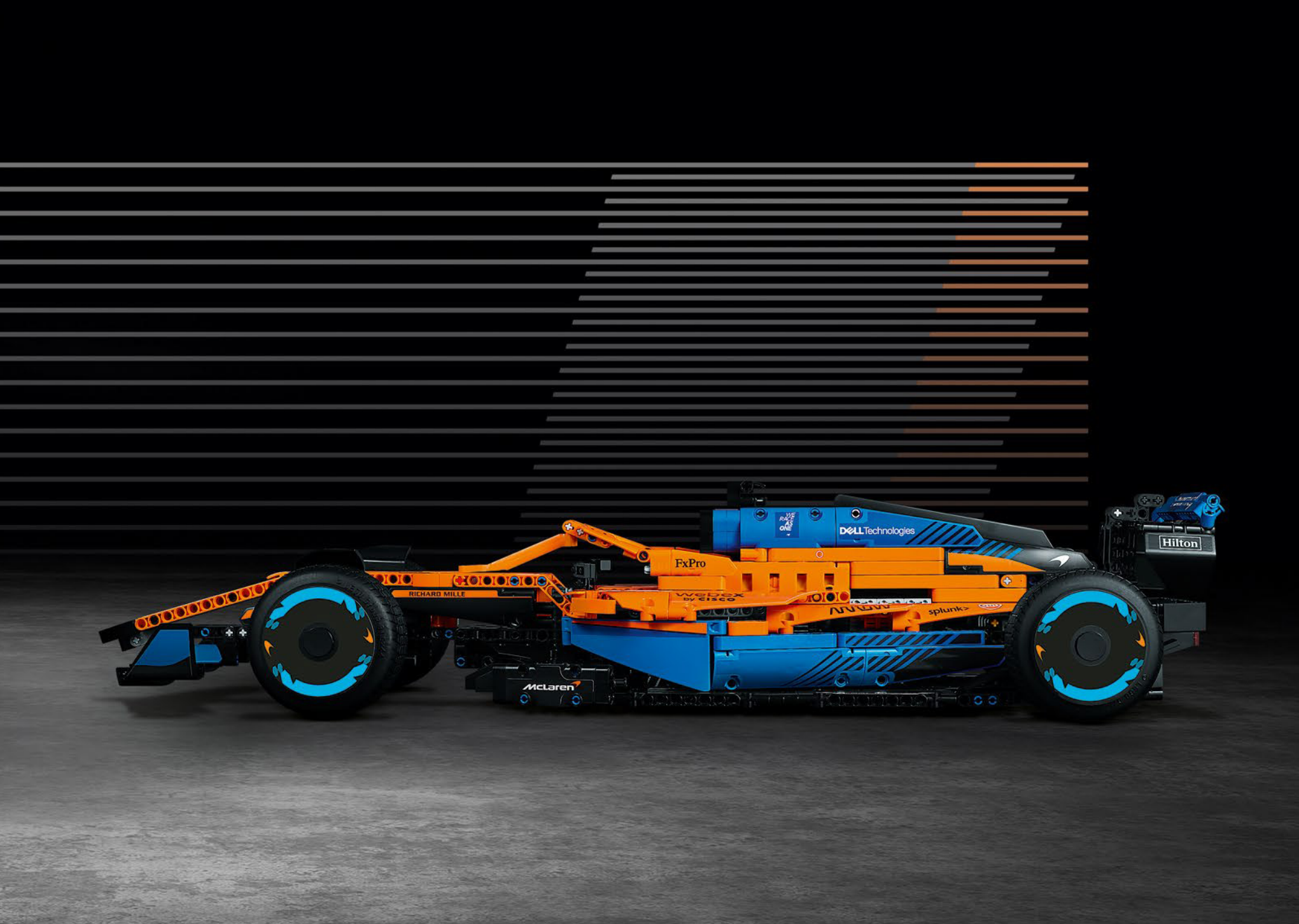
RICHARD MILLE
FxPro
WEBEX
by CISCO
DELL Technologies
splunk>
Hilton
McLaren

Hilton
Gulf

RICHARD MILLE
DELL

THE PASSION FOR PERFECTION

With over 180 race victories and 20 World Championships, McLaren Racing is one of the most successful names in the history of Formula 1. During five decades of racing, the team has become famous for its iconic vehicle designs and technical innovation.

Nothing symbolises this more than the stunning McLaren F1 racing car. Developed specifically for the 2022 season, it combines a smooth "organic" form with state-of-the-art technology. It provided the perfect challenge for the LEGO® Technic design team as they tried to recreate the McLaren 2022 Formula 1 car in Technic elements.

2021 Bahrain Grand Prix

CREATING A NEW FORMULA

The new regulations for the 2022 season presented McLaren Racing's design team with the exciting challenge of developing an entirely new race car from scratch.

With a format that looks to encourage more competitive racing, the team improved the car's aerodynamic wake to allow for closer contests with more thrilling maneuvers. The new, enhanced performance also demanded the development of completely new braking and suspension systems.

"Developing a new Formula 1 car is like assembling a puzzle. We have built significant momentum over recent seasons, and it's important that we continue our upward trajectory as we enter new, uncharted territory. The team has worked hard to embrace the new formula, and we are excited to go racing in a new chapter of the sport."

Andreas Seidl, Team Principal, McLaren F1

> **DEVELOPING A NEW FORMULA 1 RACING CAR IS LIKE DEVELOPING AND ASSEMBLING A PUZZLE**
>
> Andreas Seidl, Team Principal, McLaren F1

2021 French Grand Prix

LARS KROGH JENSEN
Designer
LEGO® Technic

THE PERFECT PARTNERSHIP

Frequent check-ins between the two design teams were vital to ensuring the final model captured both the look and spirit of the real 2022 McLaren Formula 1 racing car. James Key, Executive Director, Technical at McLaren F1 was pleased with the flexibility and collaboration of the Technic designers – "We began working on the next generation of racing car as soon as the blueprint is revealed. From there the process is almost continuous until the very last moment. We were delighted to have that agile working relationship with the Technic team. The final result looks fantastic."

FROM THE DESIGN TEAM

The biggest challenge LEGO® designer Lars Krogh Jensen faced while recreating the LEGO Technic version of the McLaren Formula 1 car was the fact that the real racing car was still under development. "*It was exciting following the process and seeing their car evolve, but of course, it also meant I was constantly having to make adjustments to our model.*" The team started with a sketch build, which quickly revealed extra stability would be needed due to the model's 65 cm (25.5 in.) extended length. Capturing the smooth rounded lines of the car's design in rigid Technic elements was the next big test. But for Lars it was also about the features and functions: "*It wouldn't be a real Technic model without things like the working differential and steering.*"

1

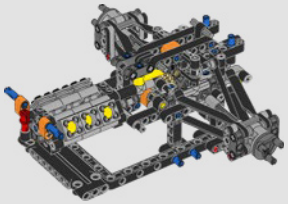

12
61

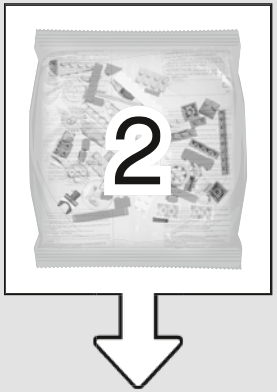
2

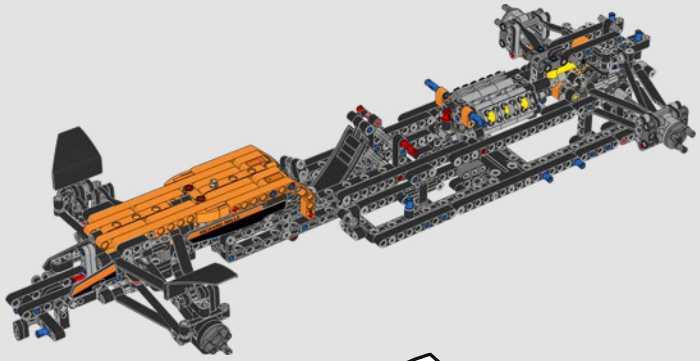

62
161

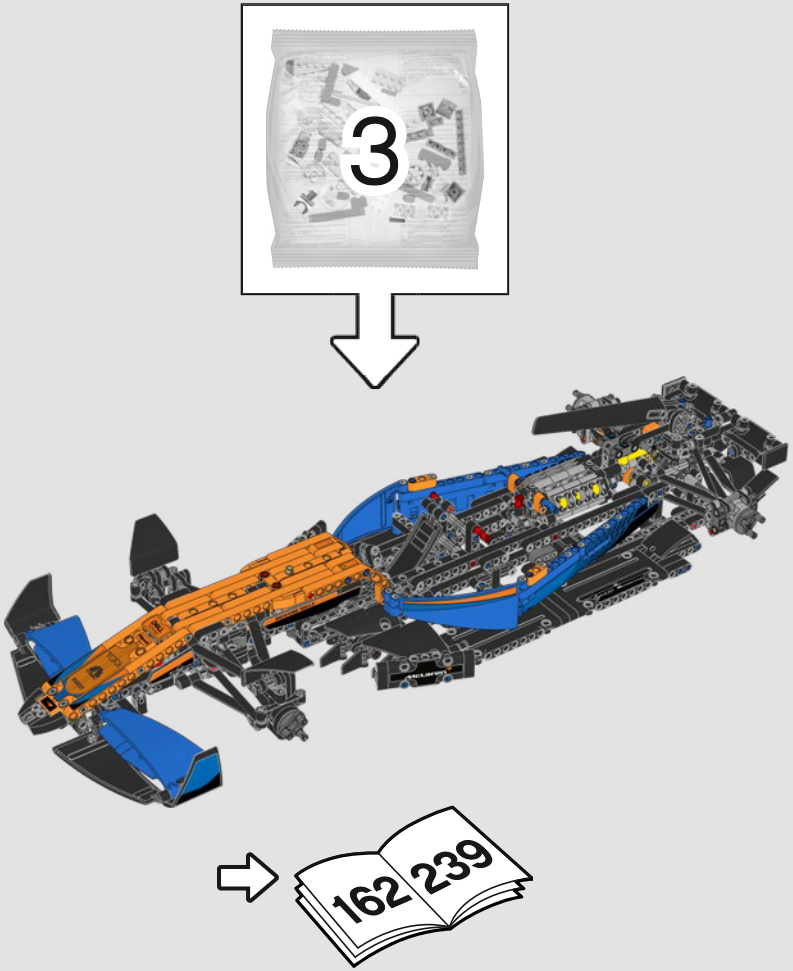
3
162 239

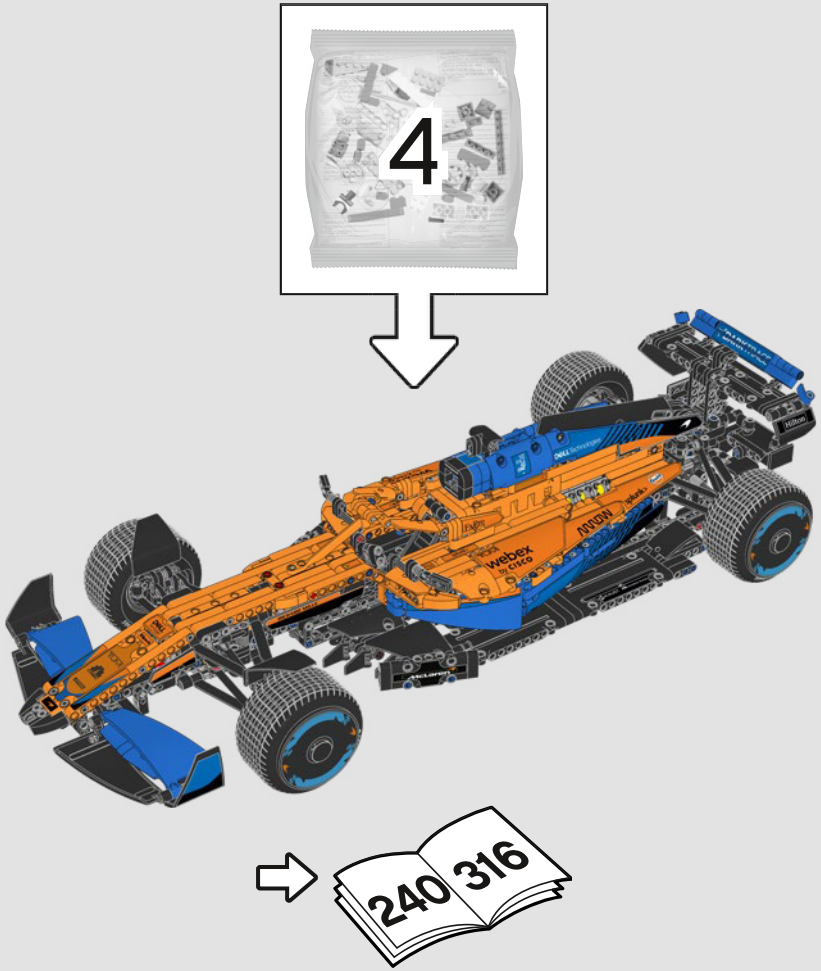
4
240 316

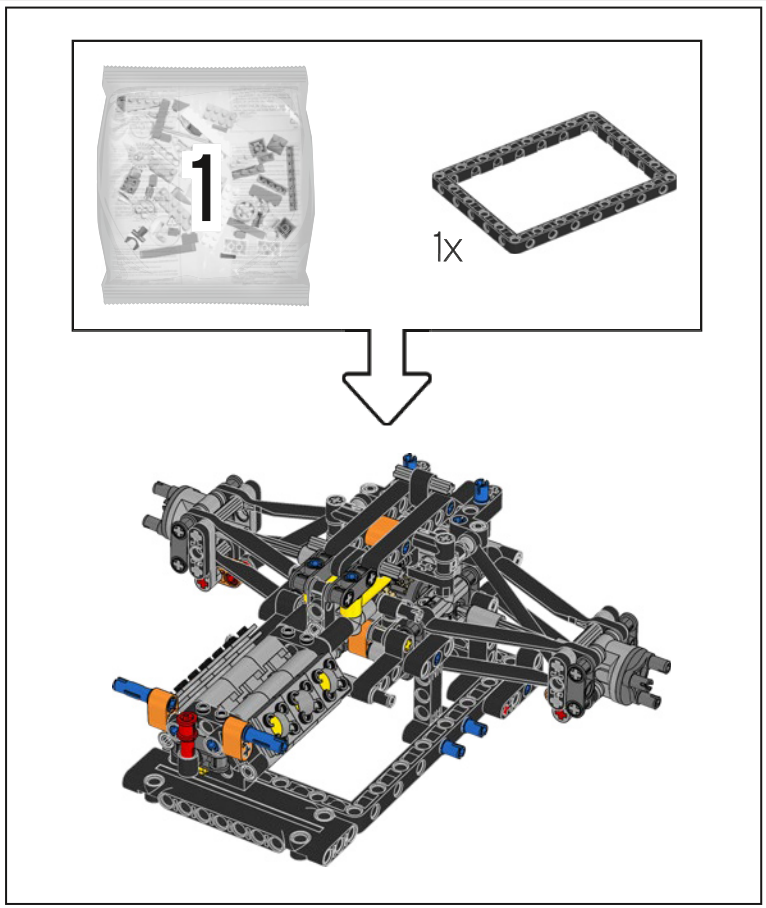
1
1x

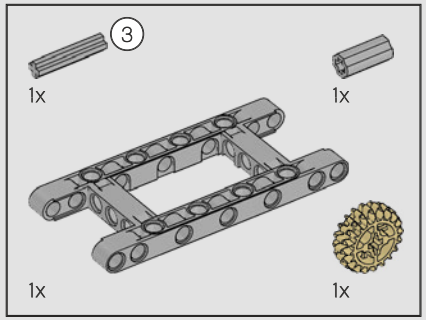

1

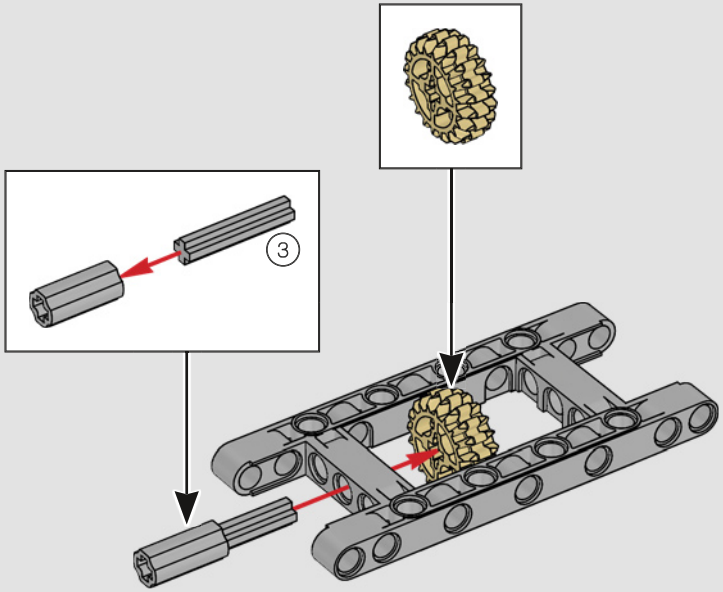

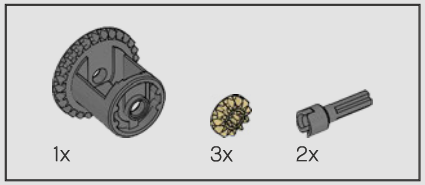

2

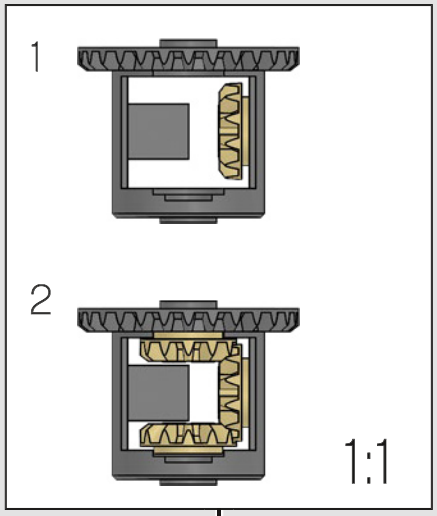

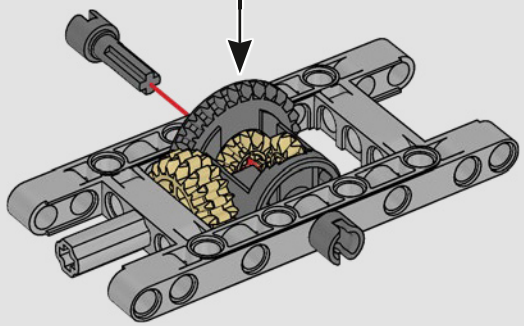

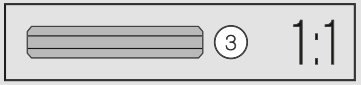

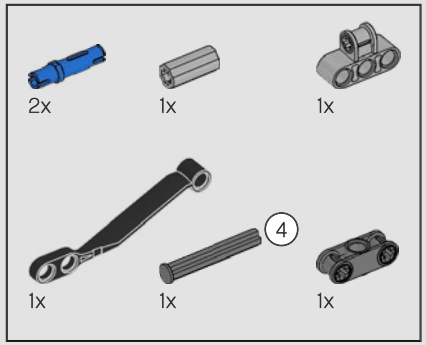

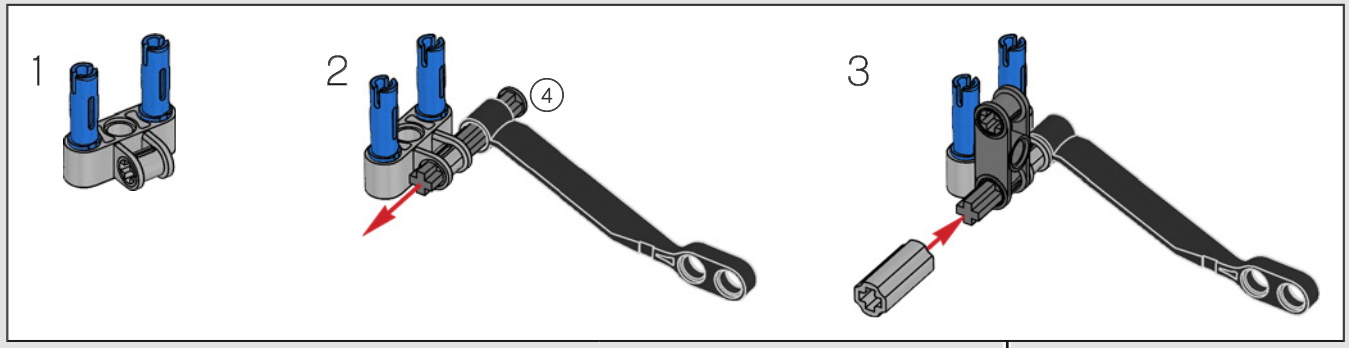

3

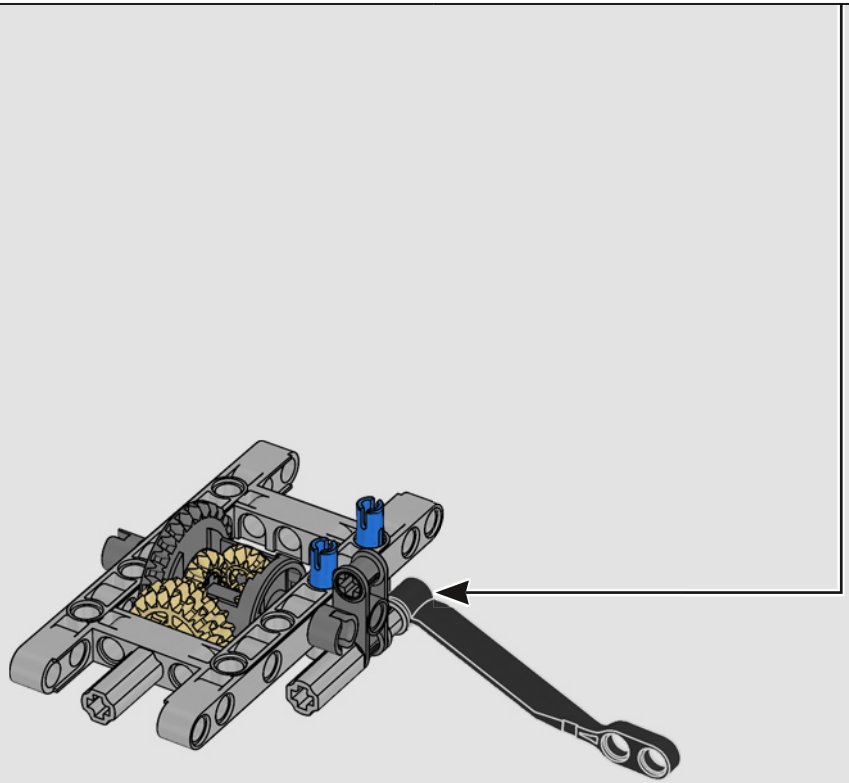

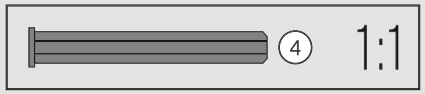

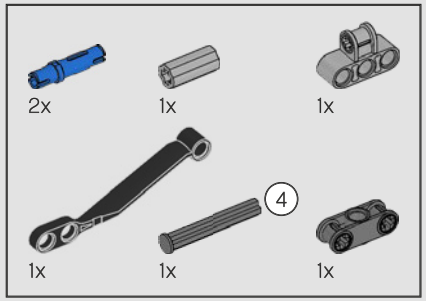

4

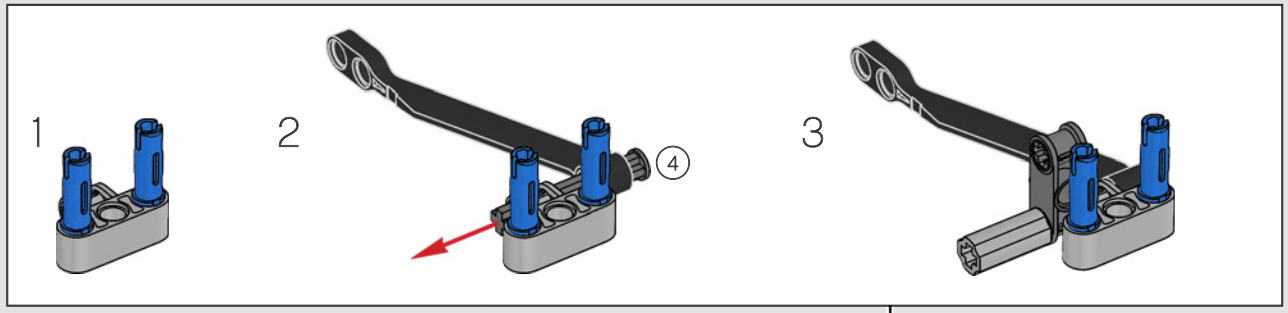

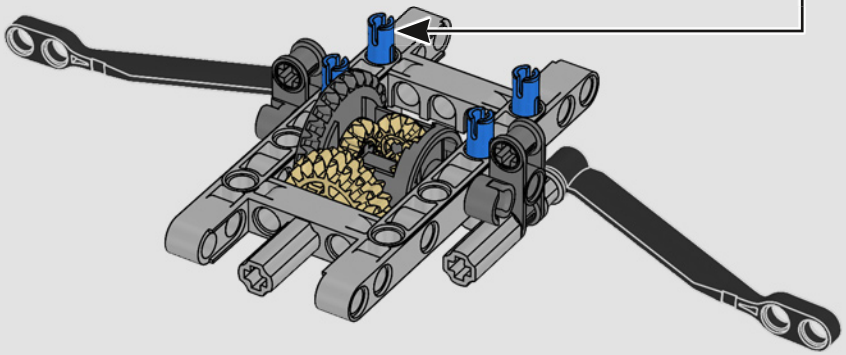

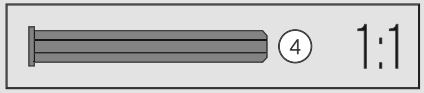

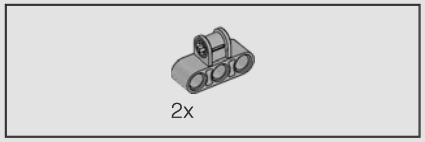

5

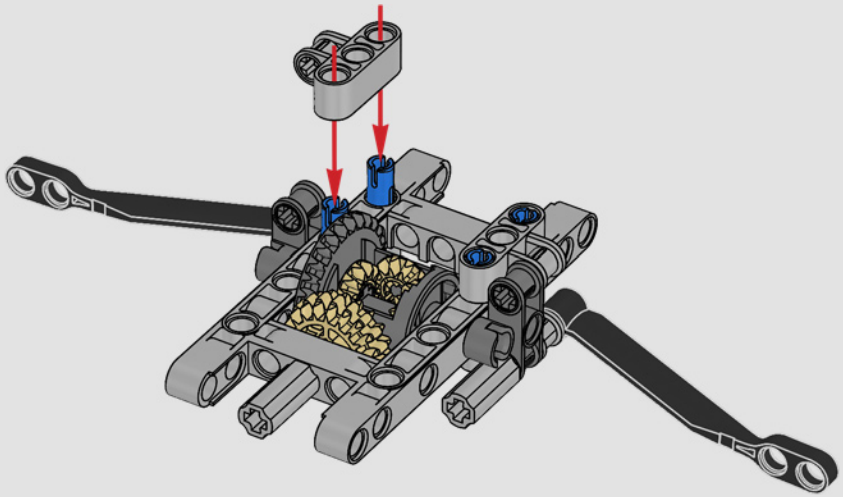

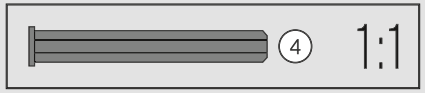

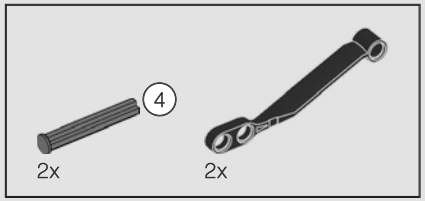

6

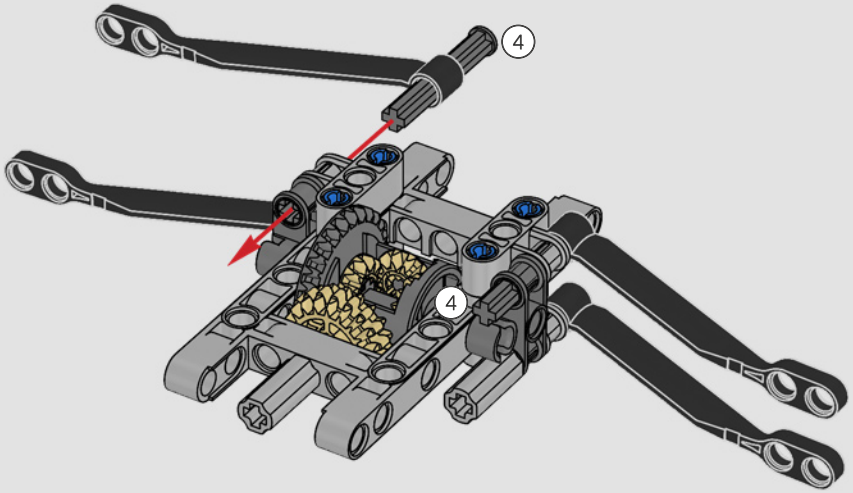

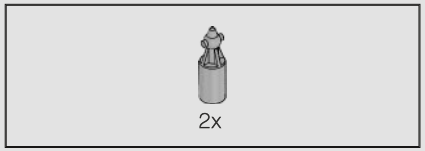

7

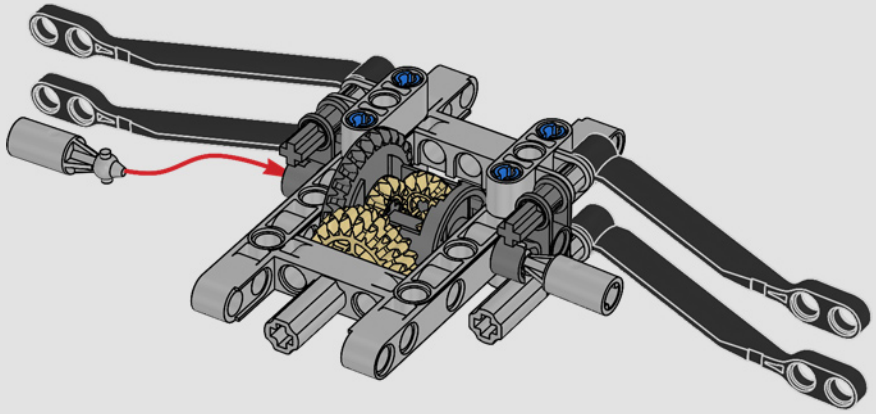

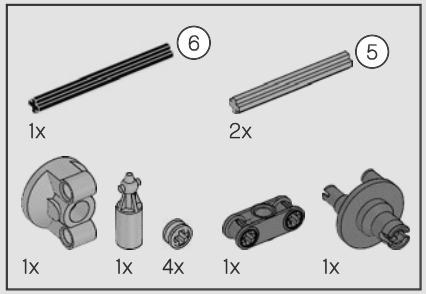

8

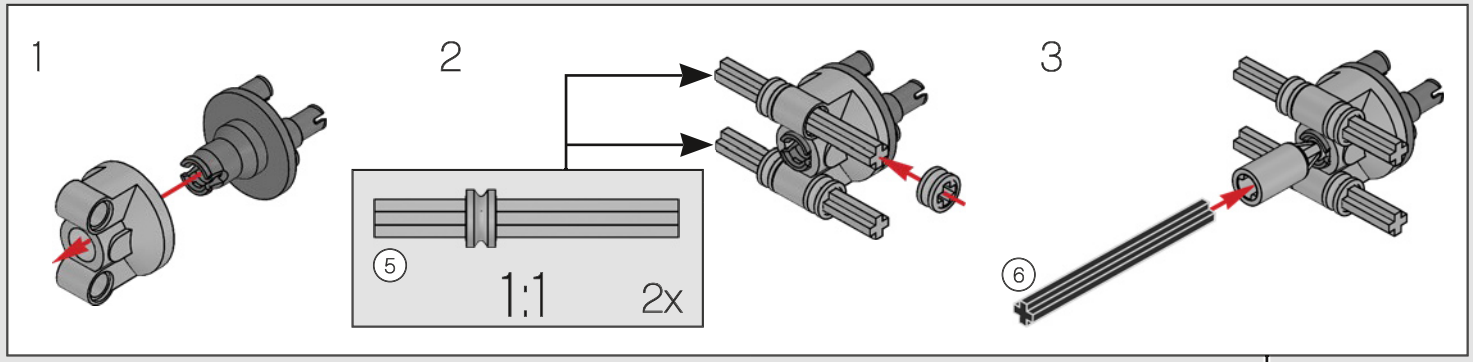

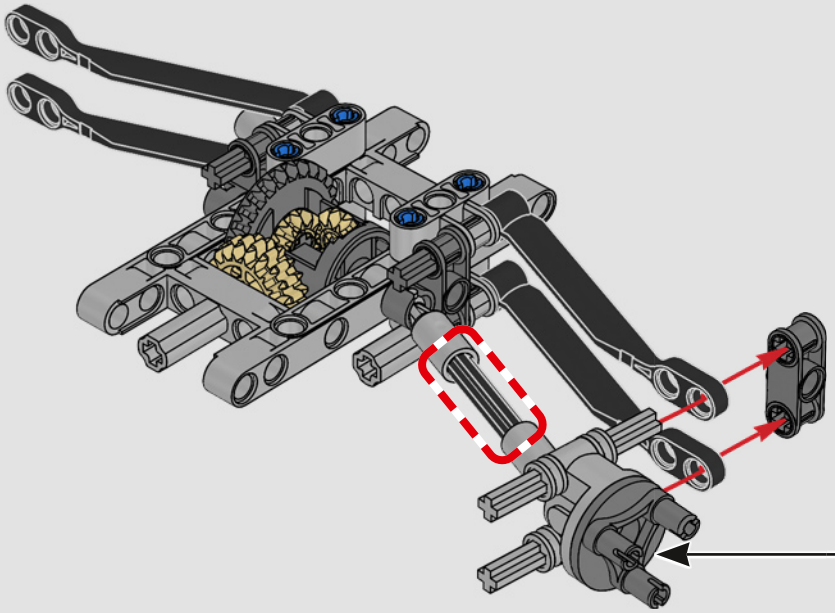

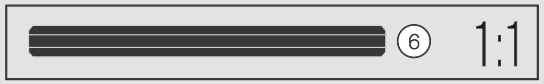

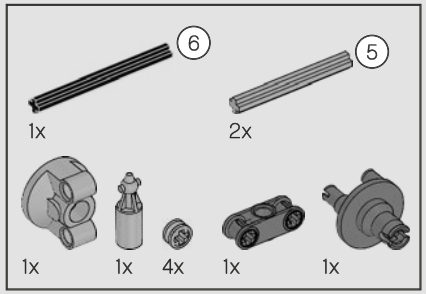

9

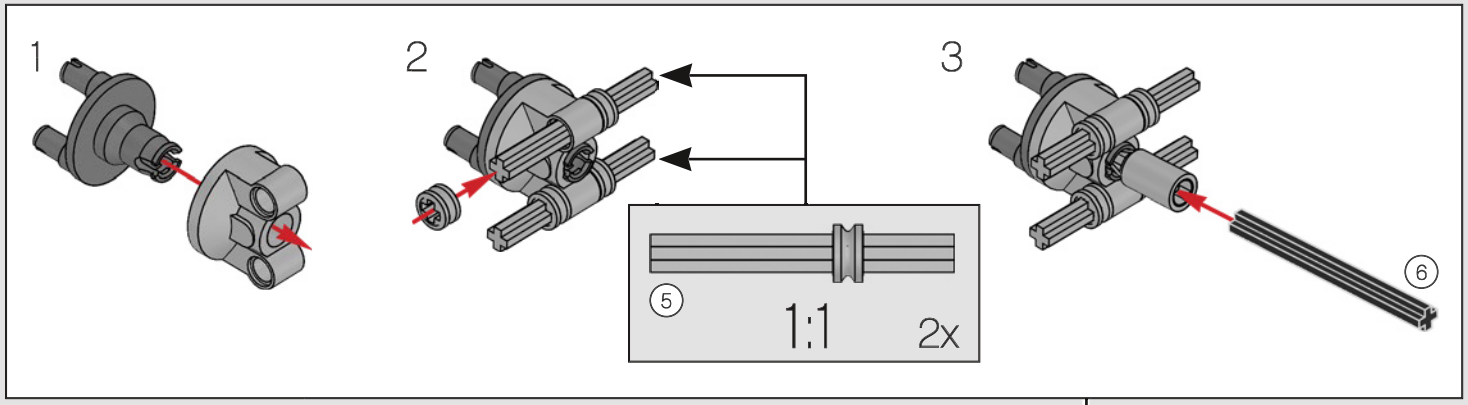

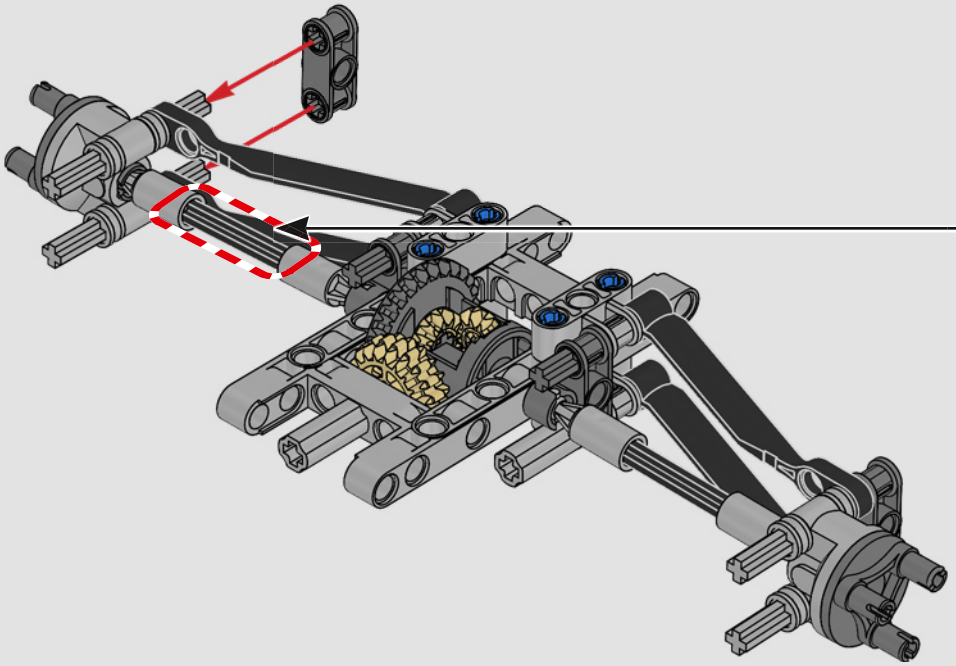

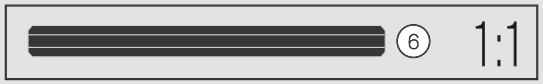

10

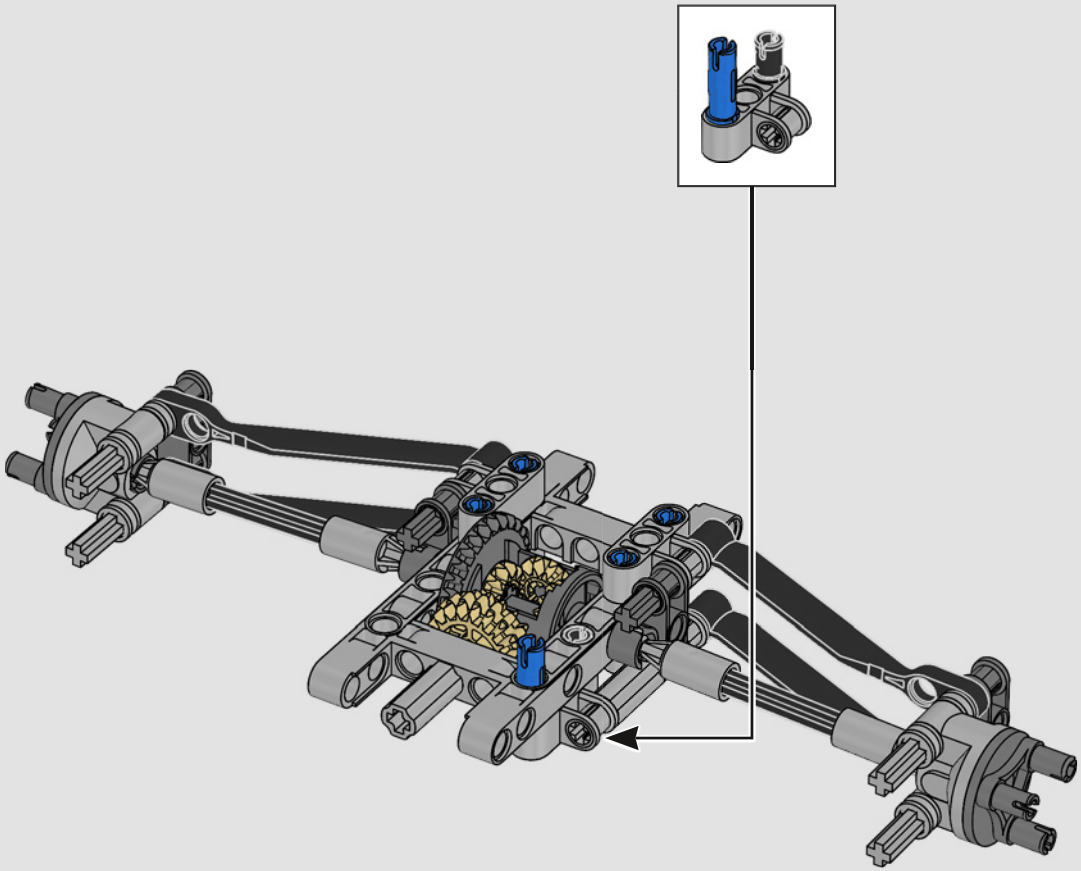

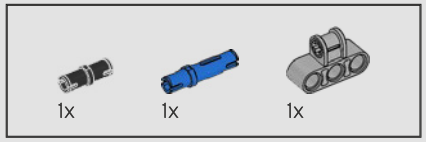

11

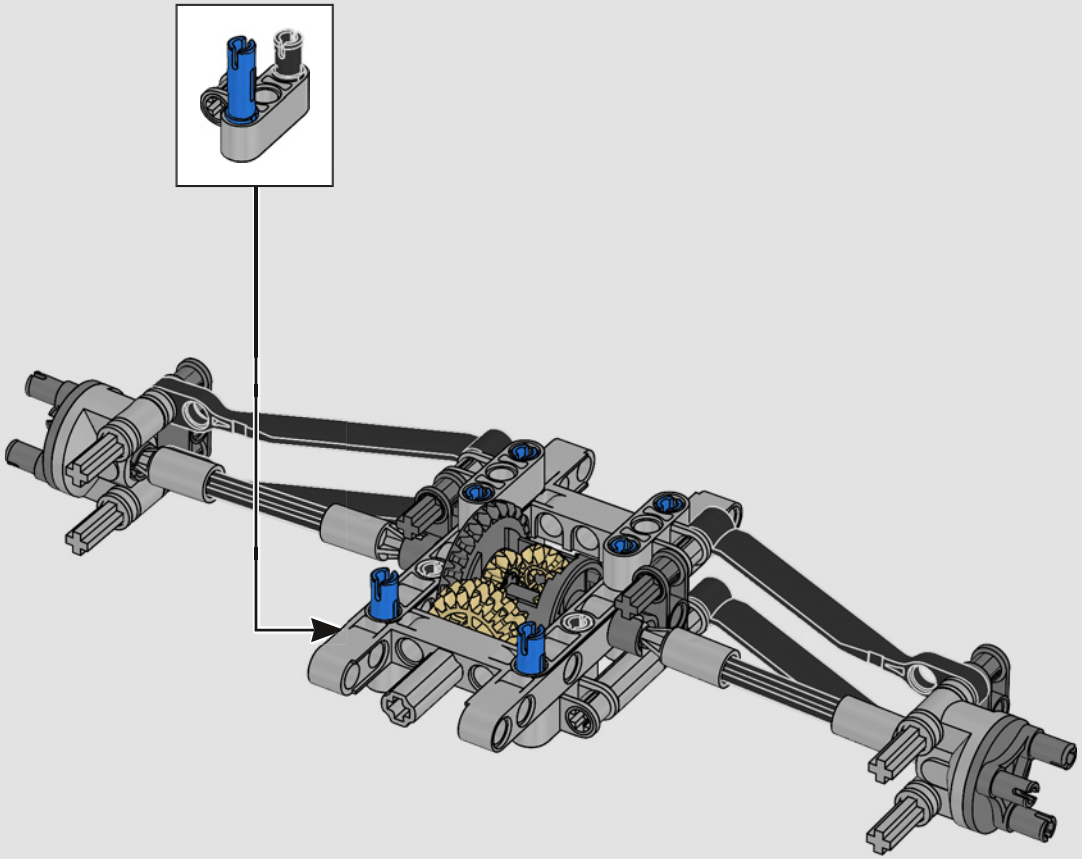

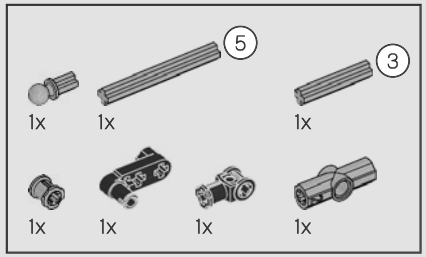

12

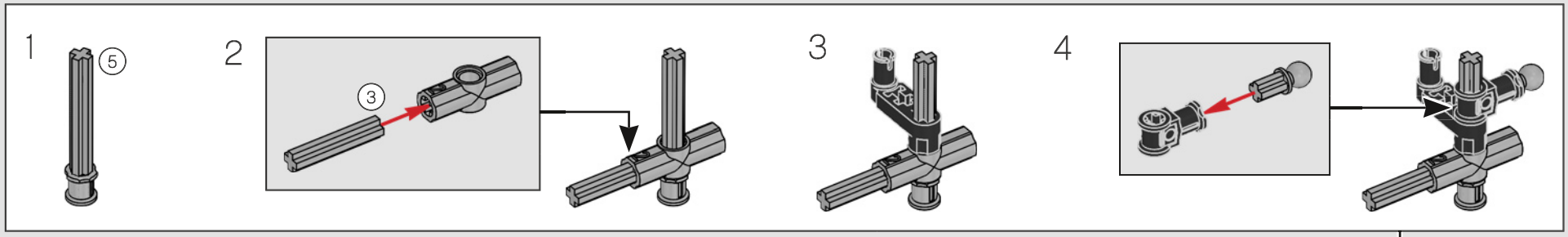

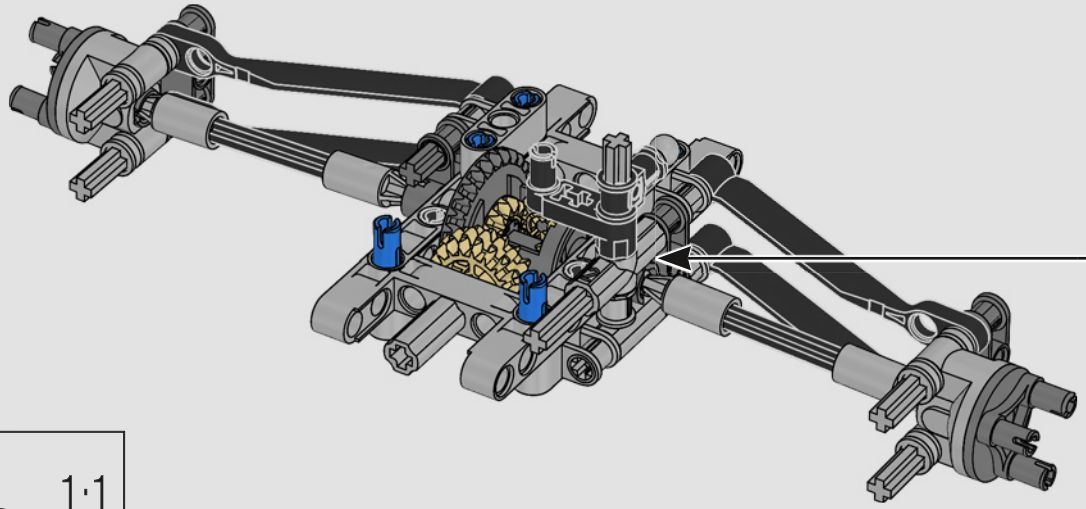

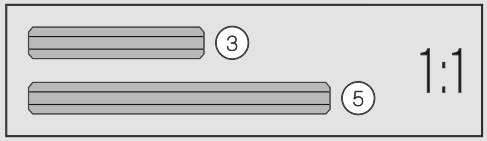

13

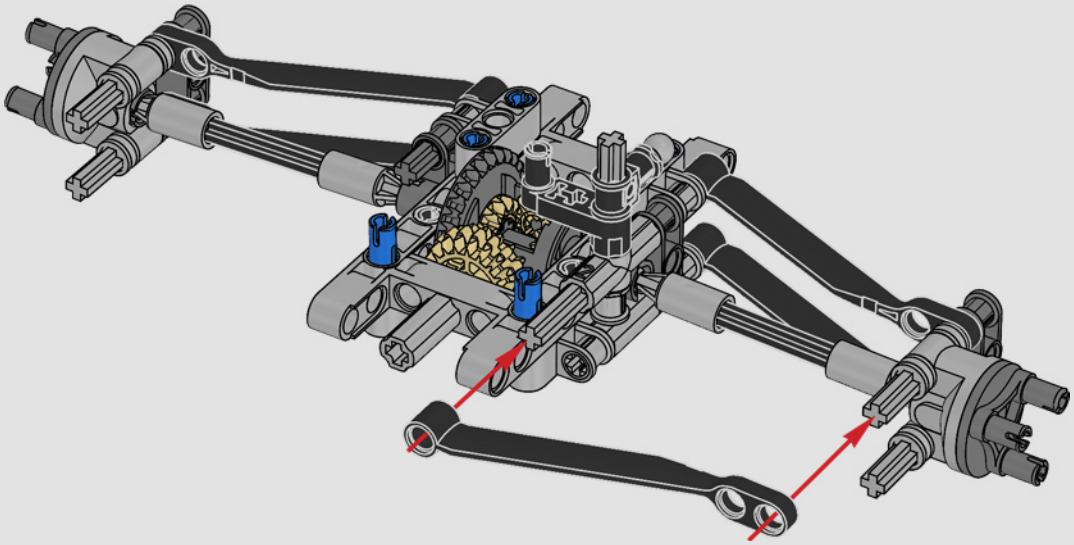

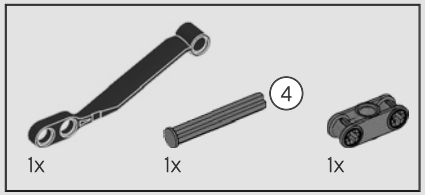

14

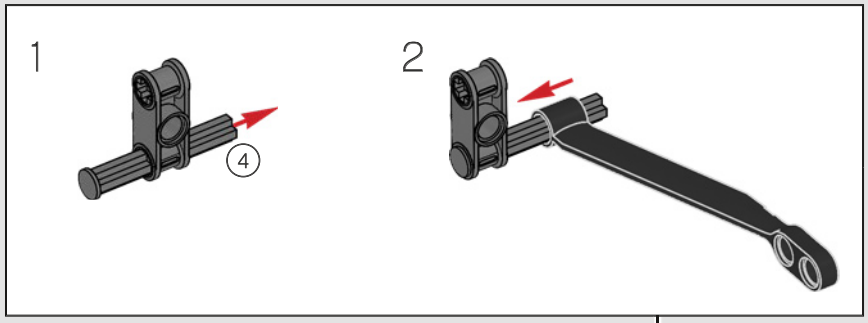

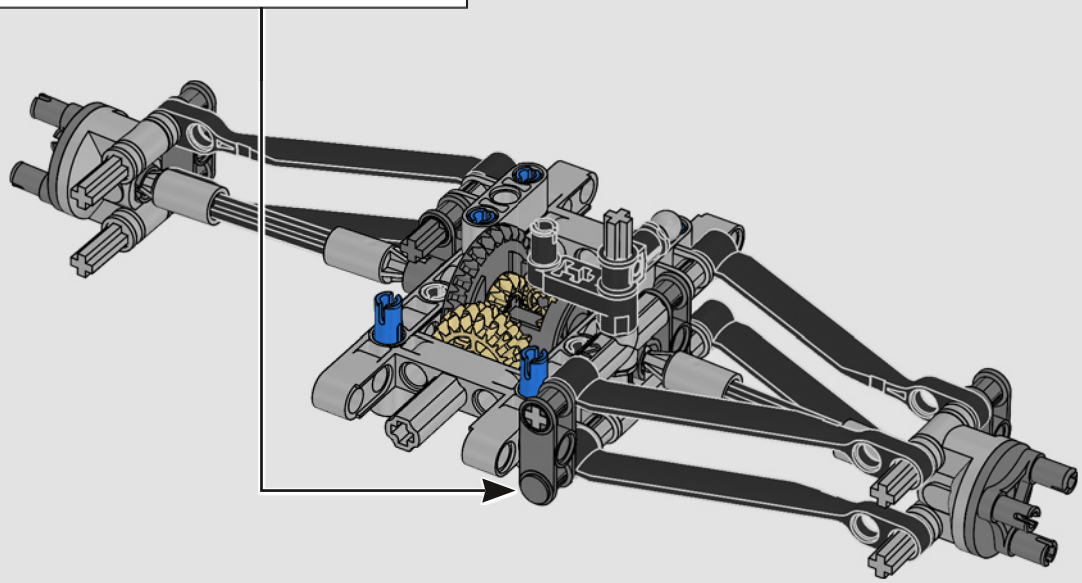

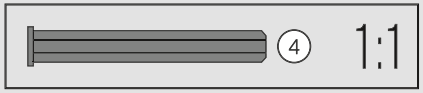

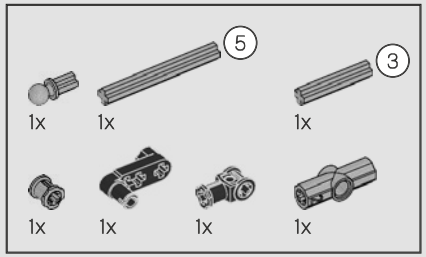

15

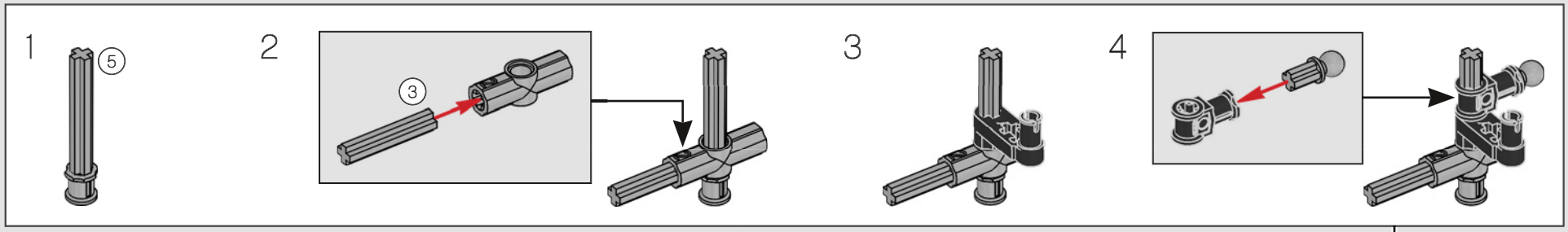

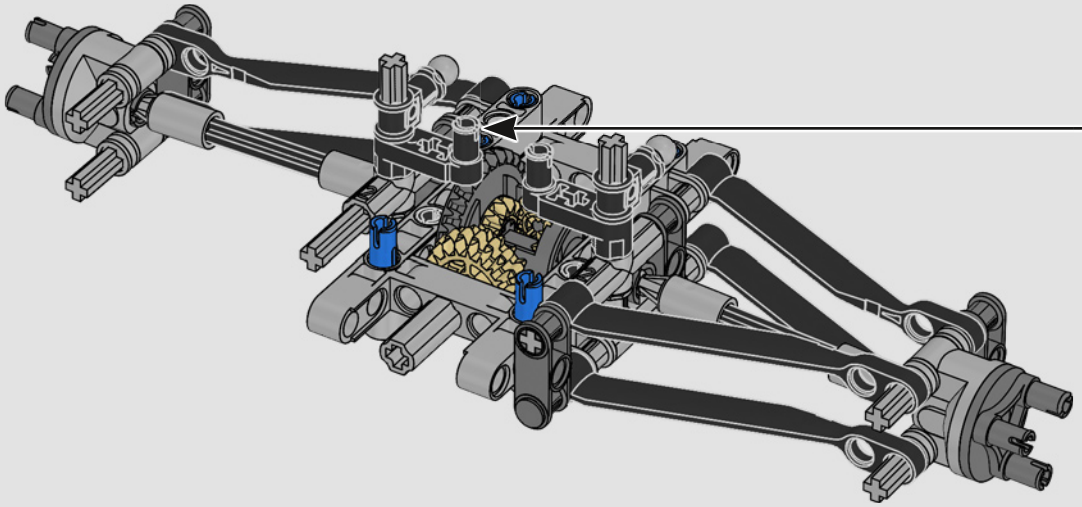

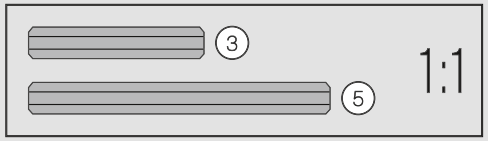

16

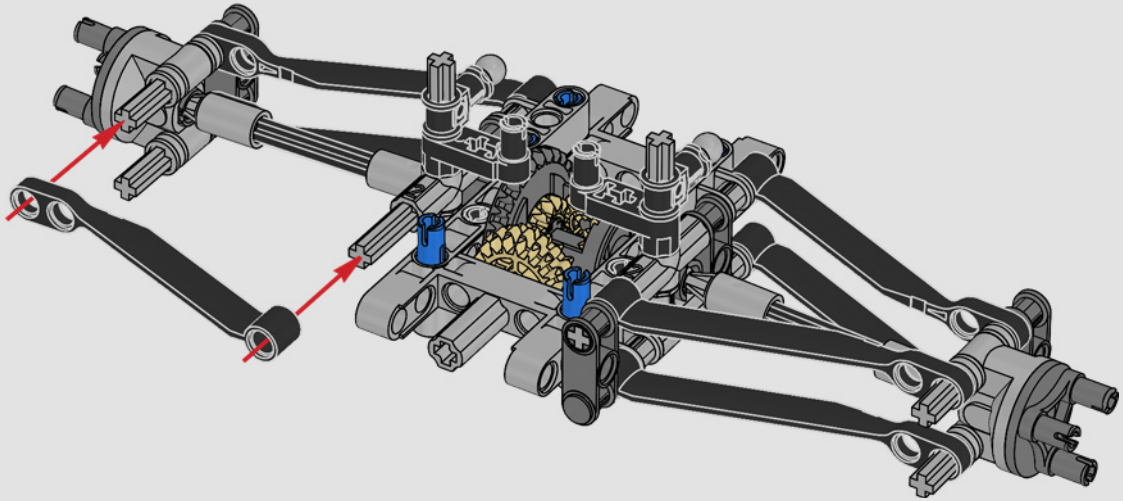

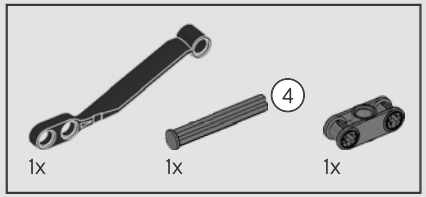

17

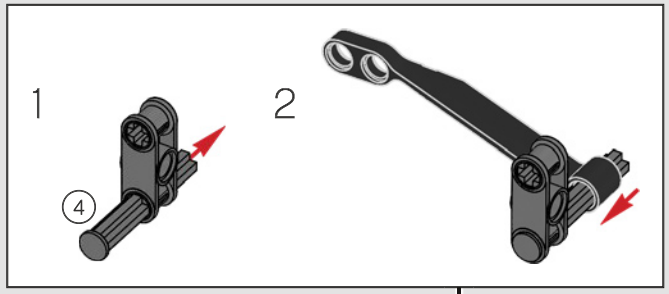

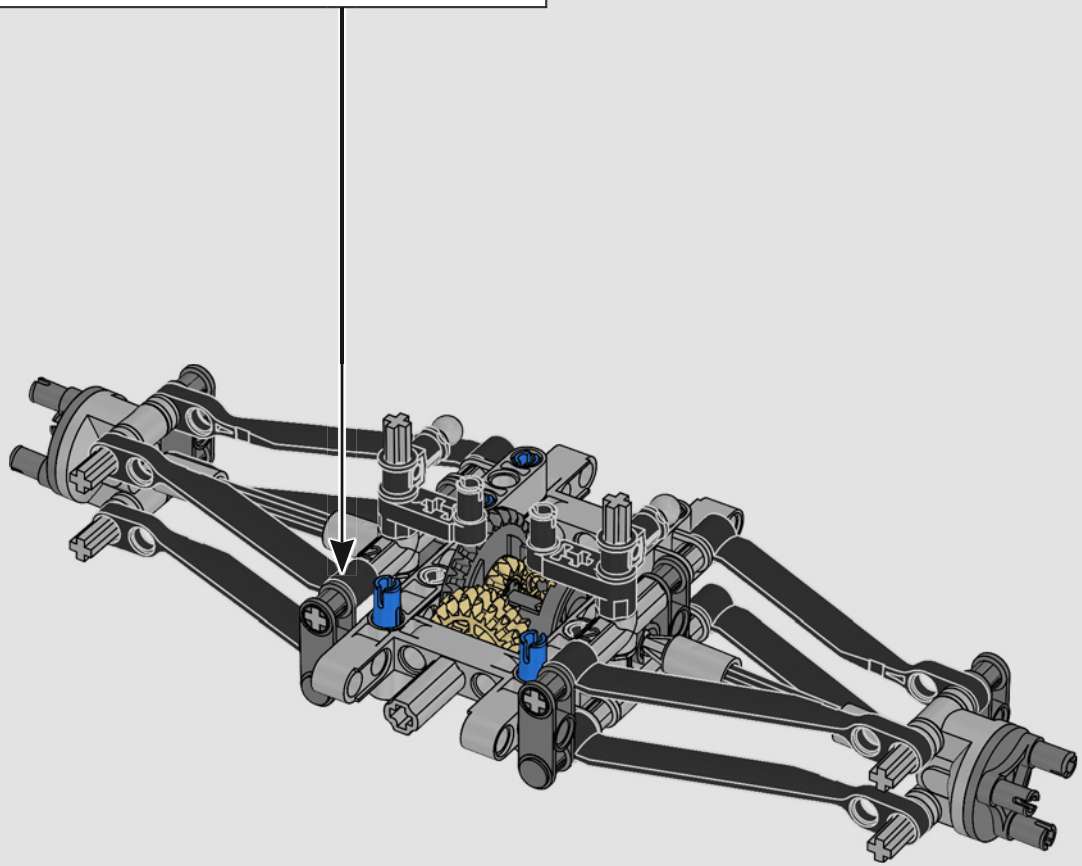

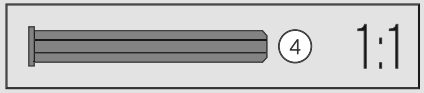

18

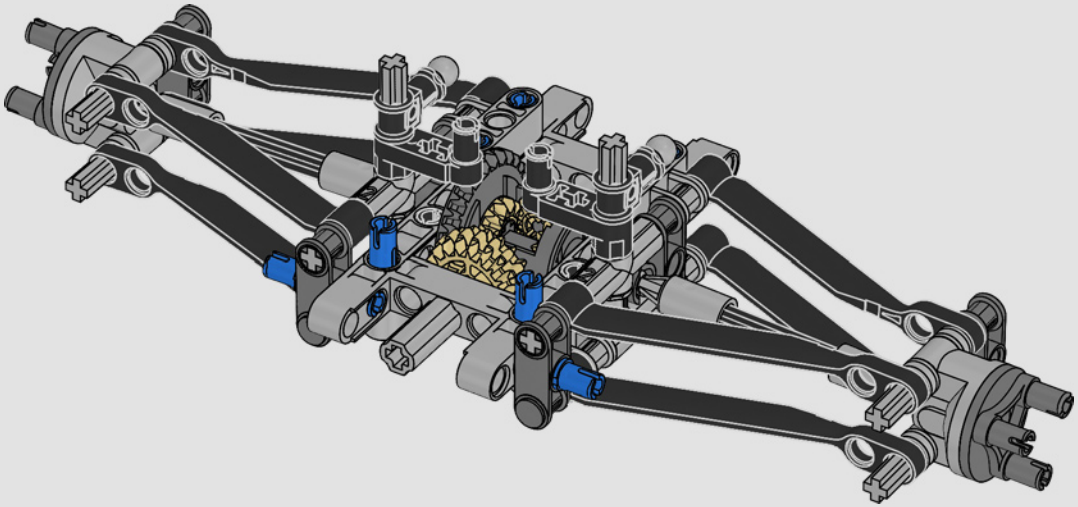

2x

19

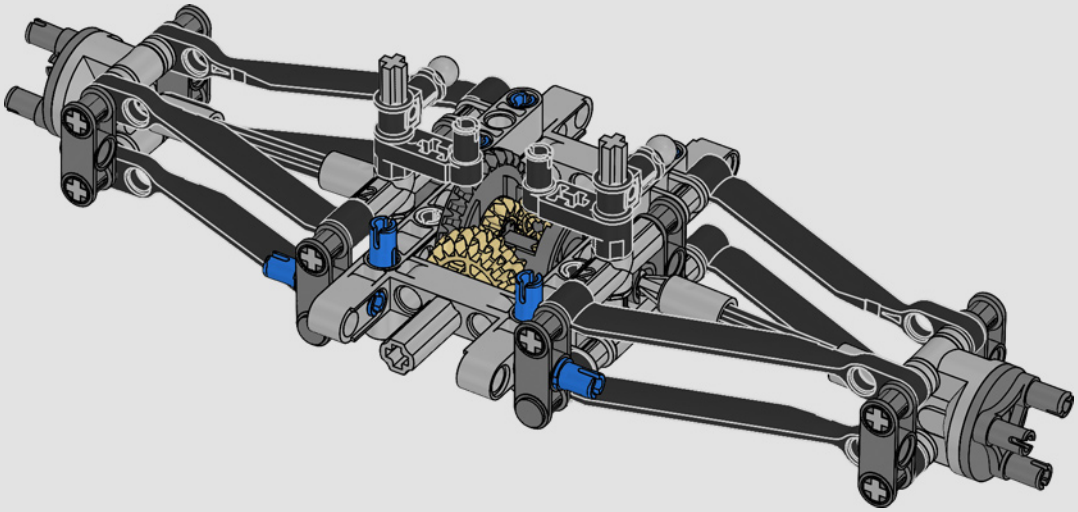

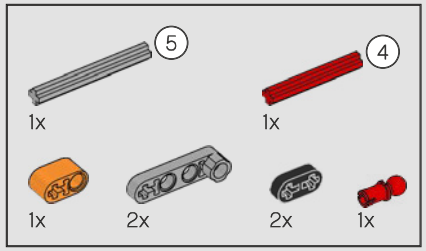

20

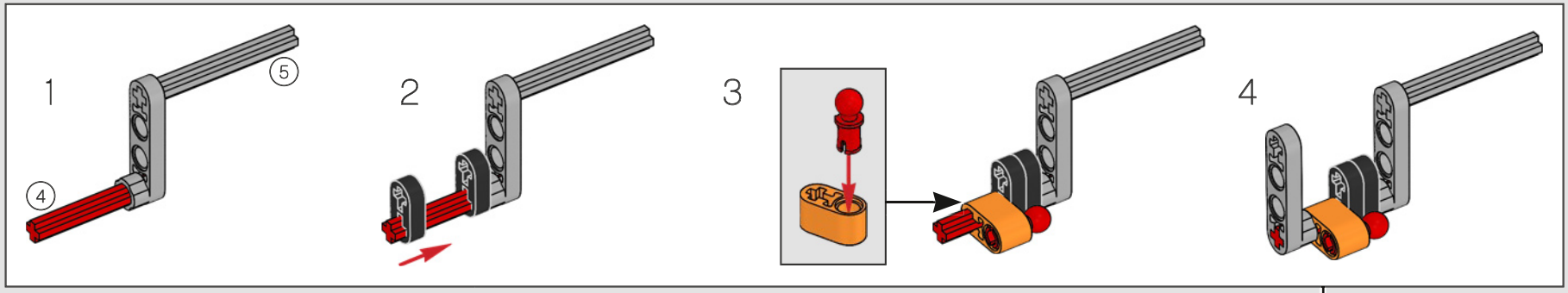

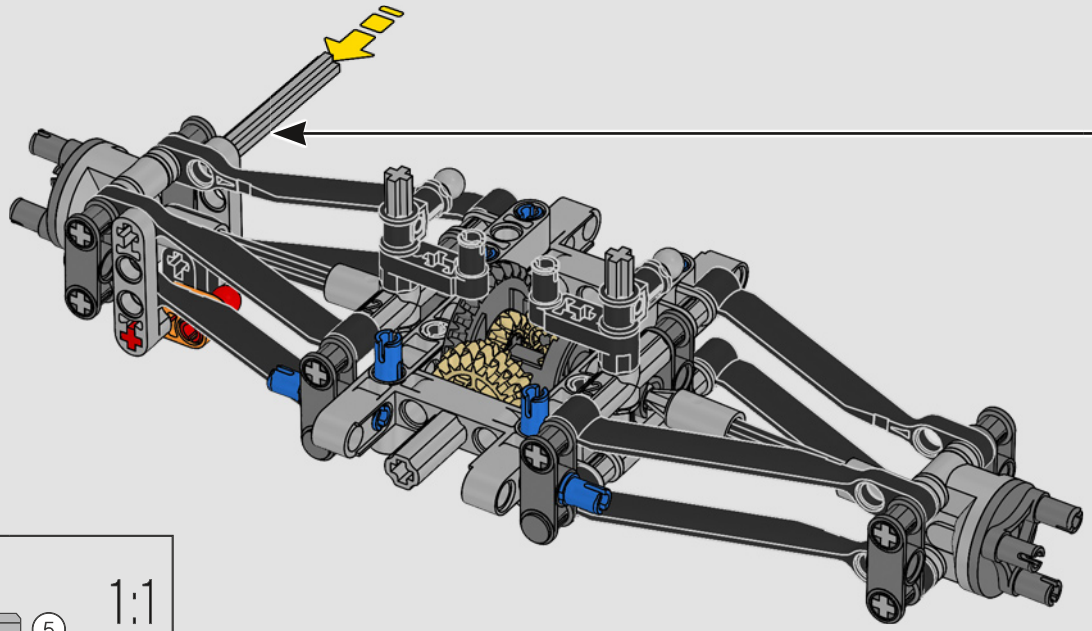

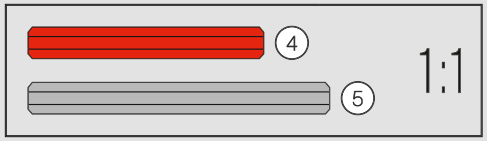

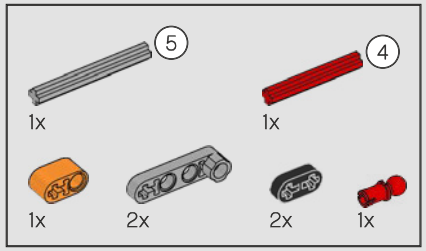

21

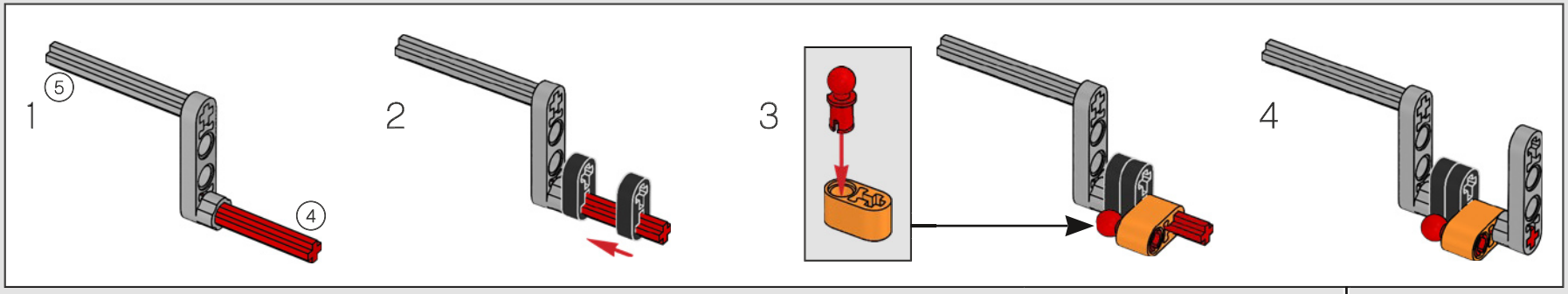

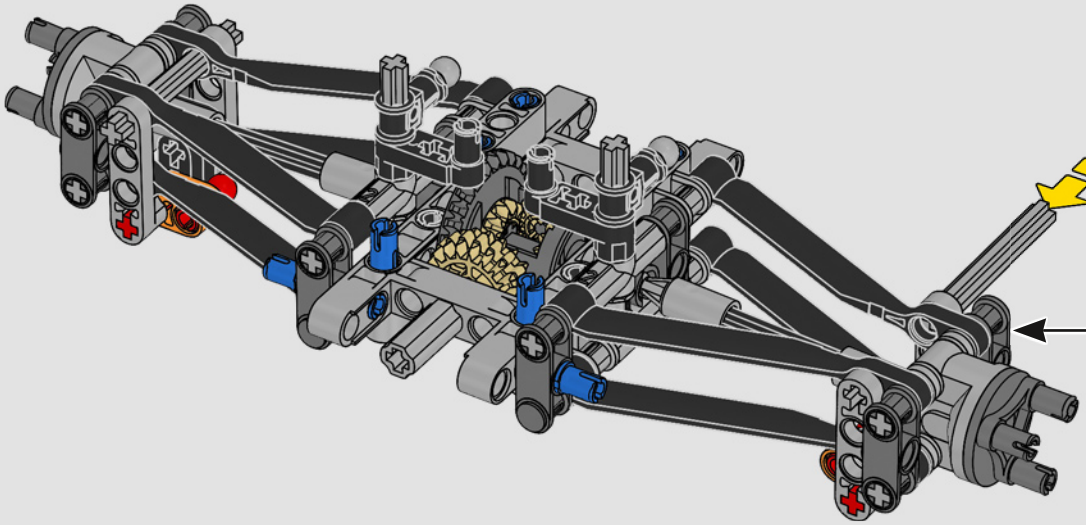

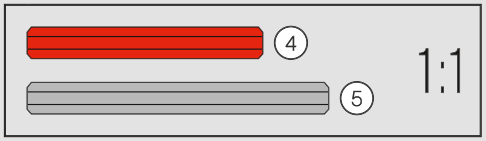

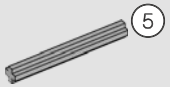

22

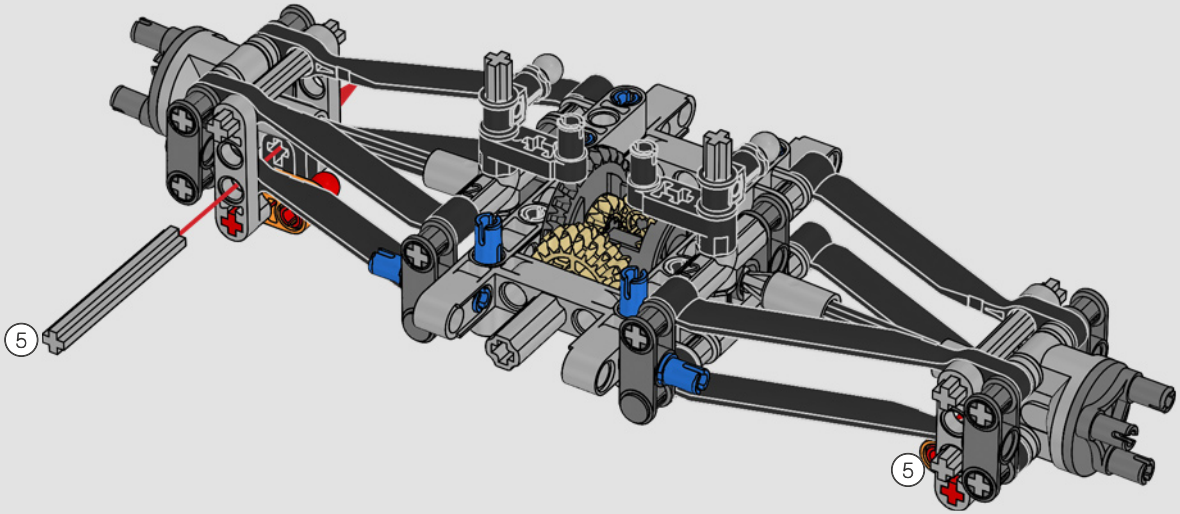

1:1

4x

23

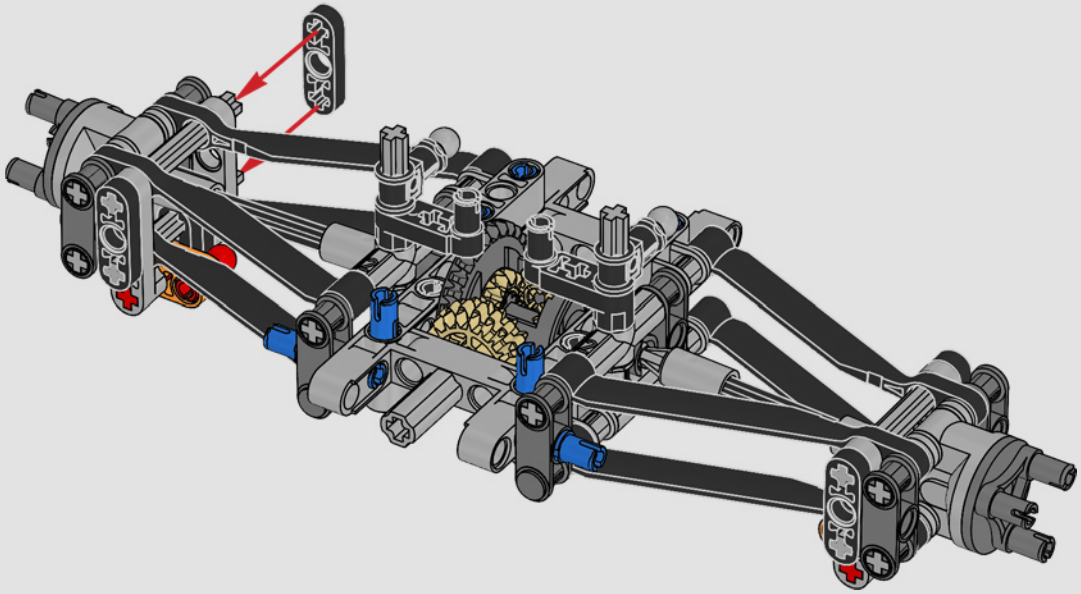

24

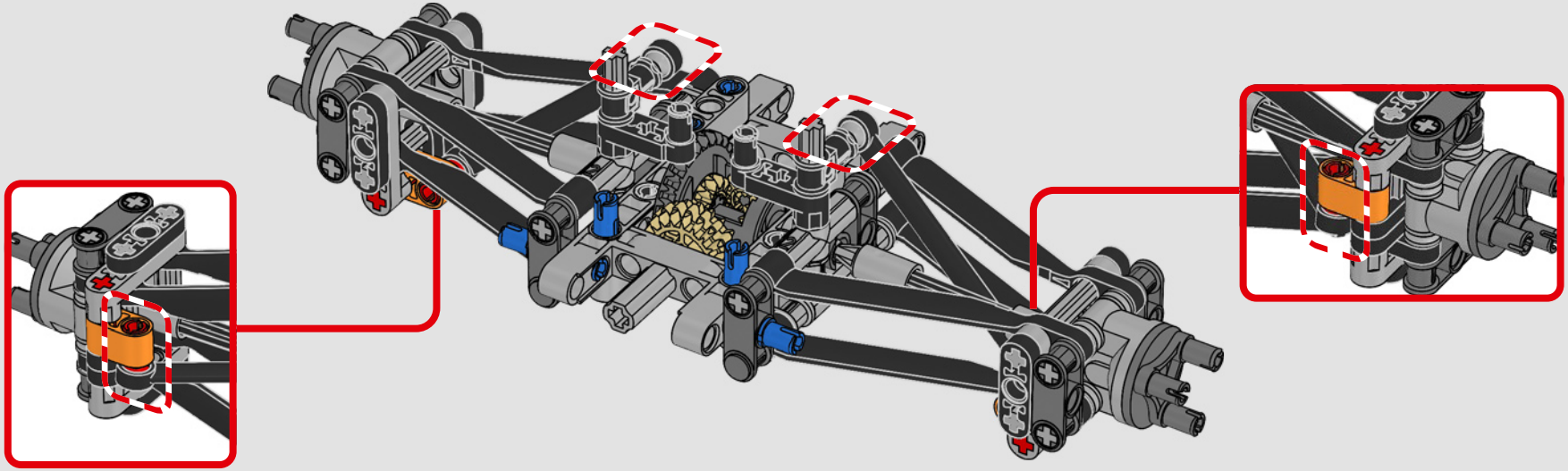

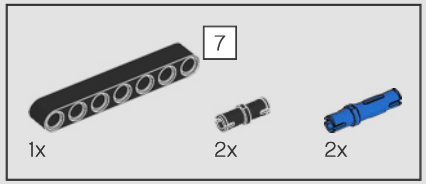

25

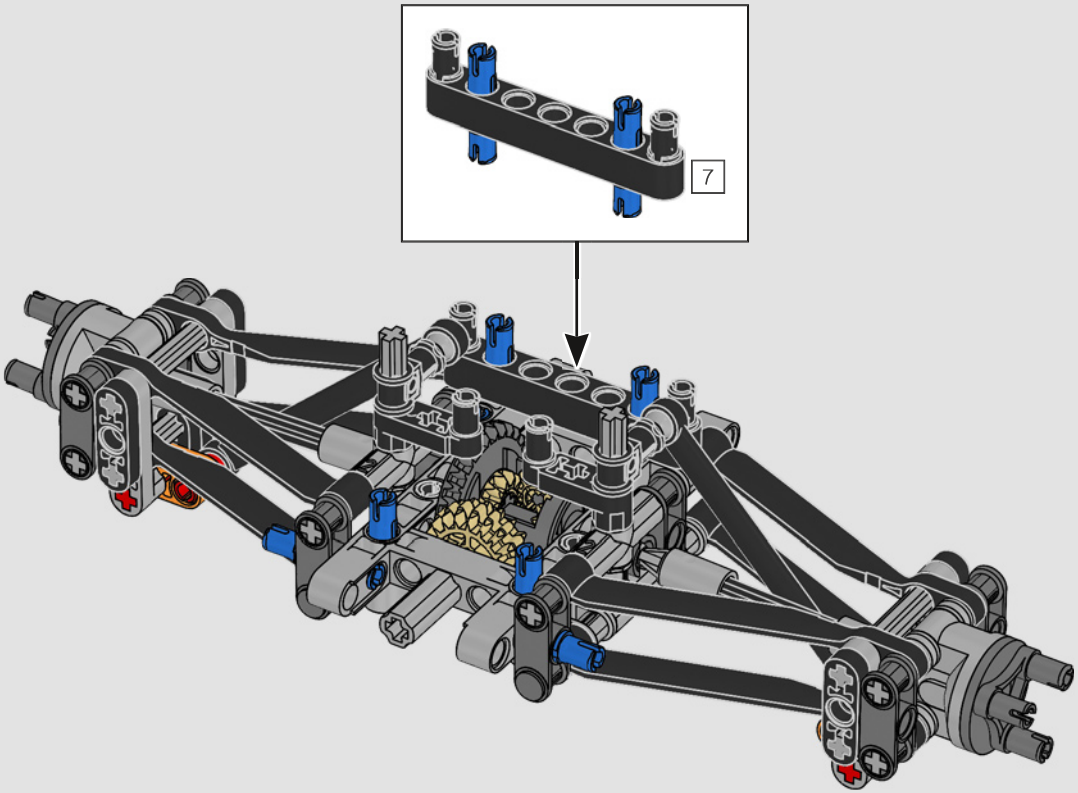

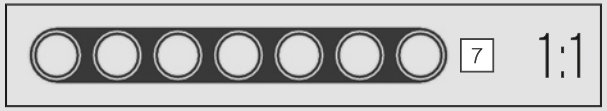

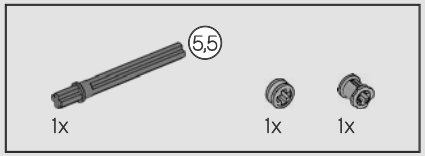

26

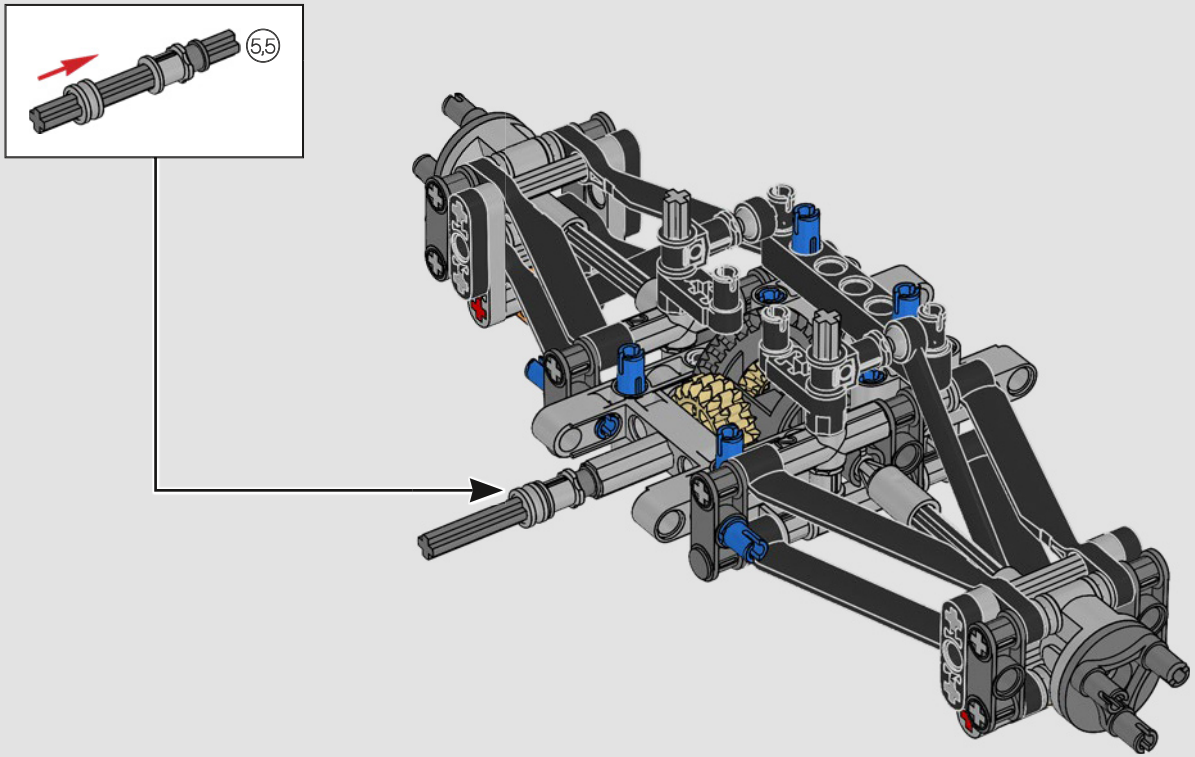

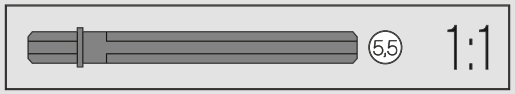

2x

27

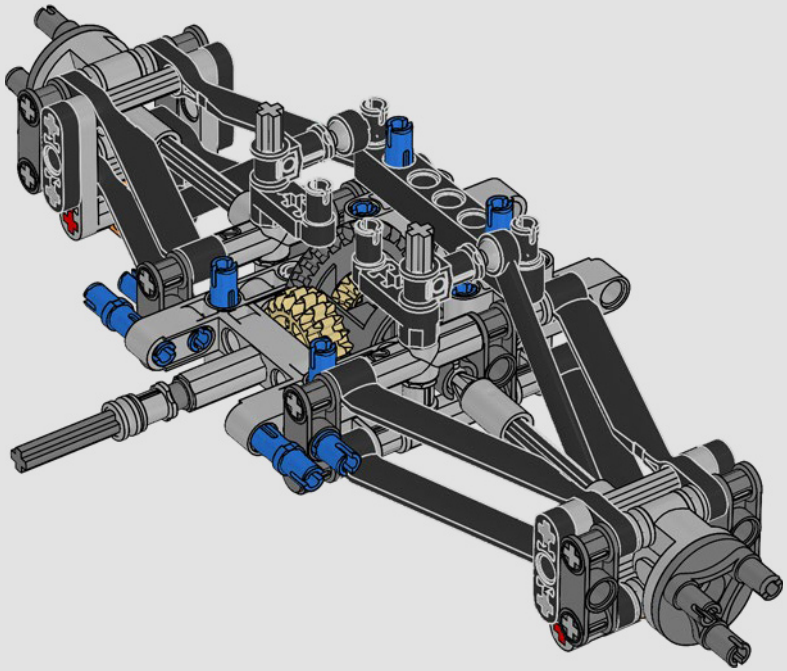

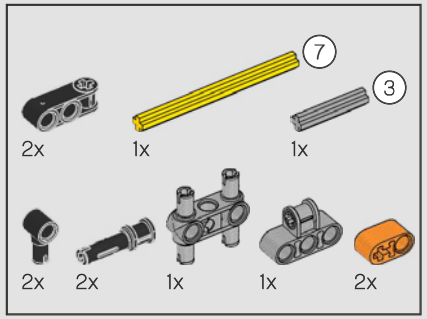

28

1

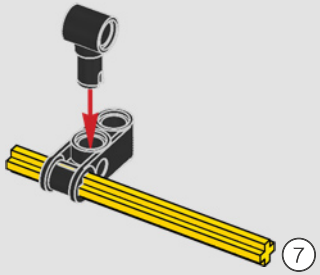

2

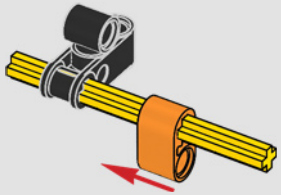

3

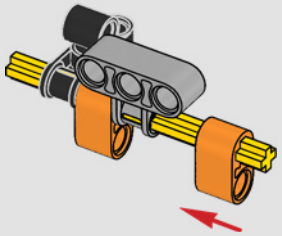

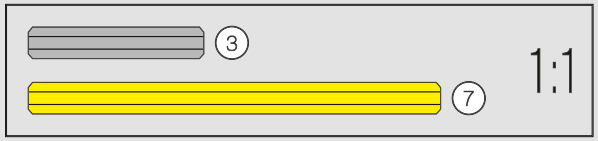

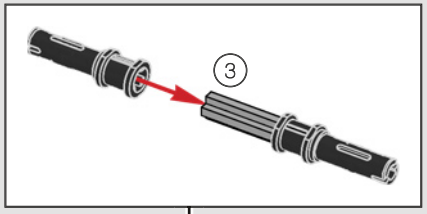

4

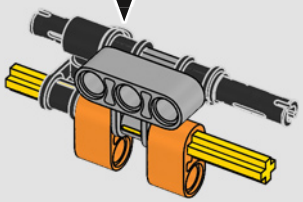

5

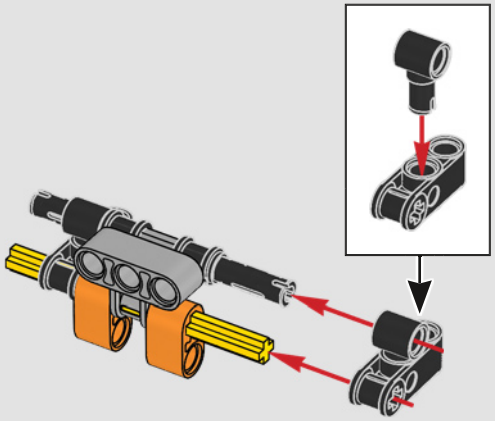

6

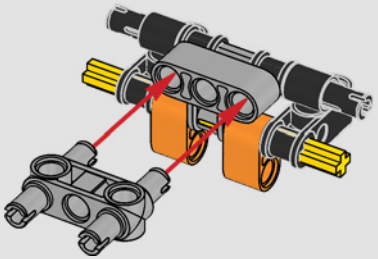

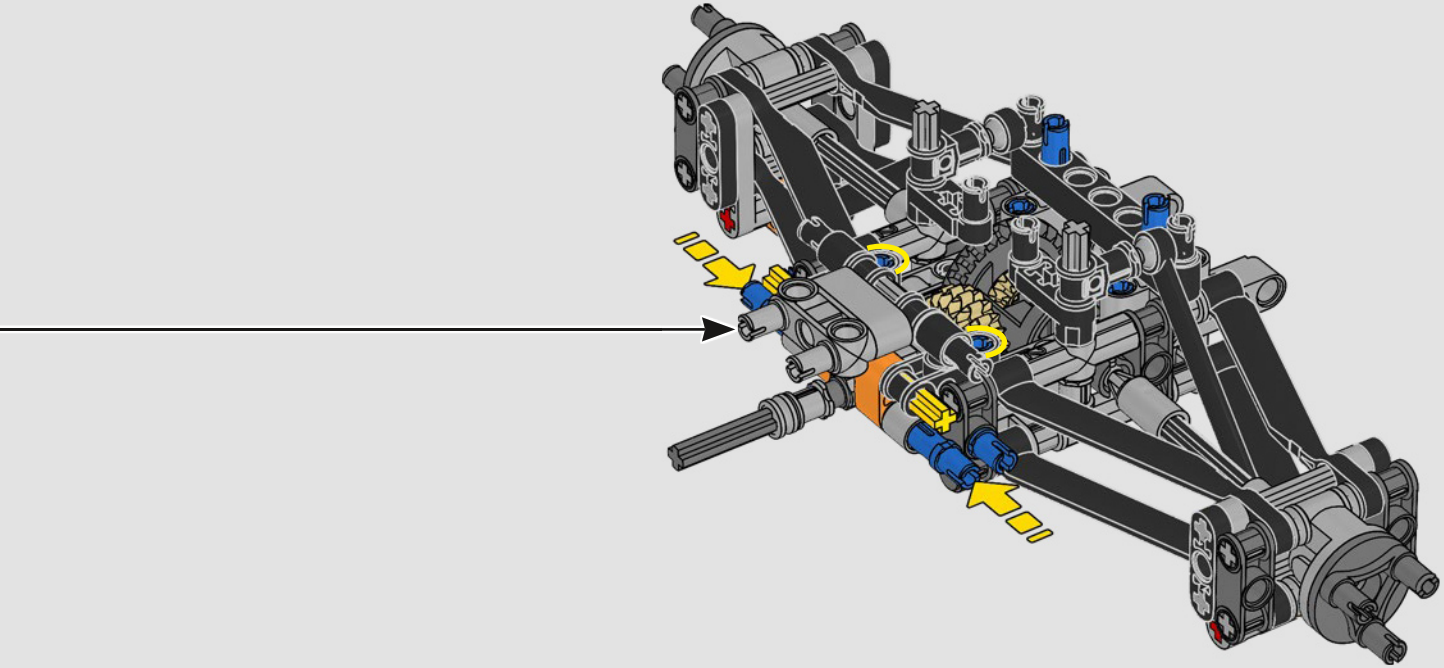

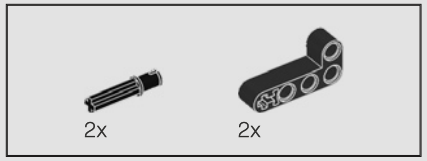

29

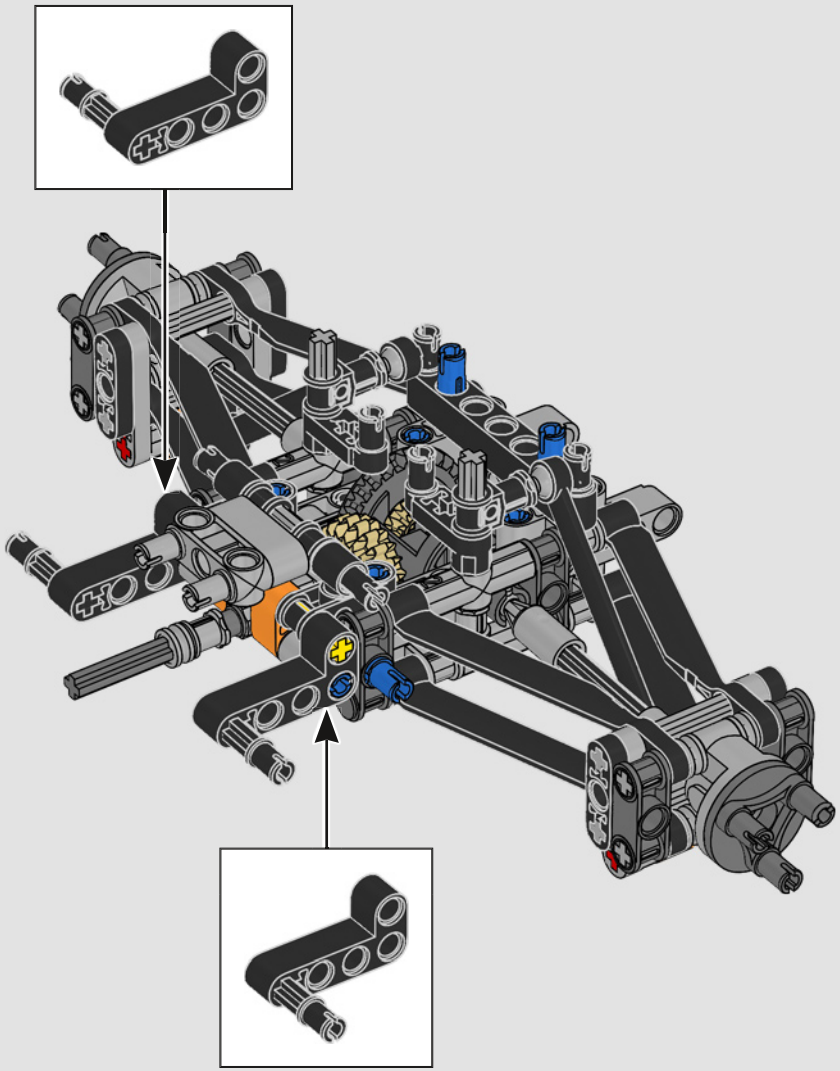

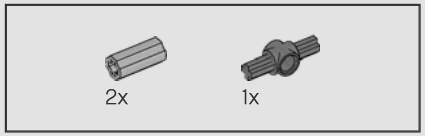

30

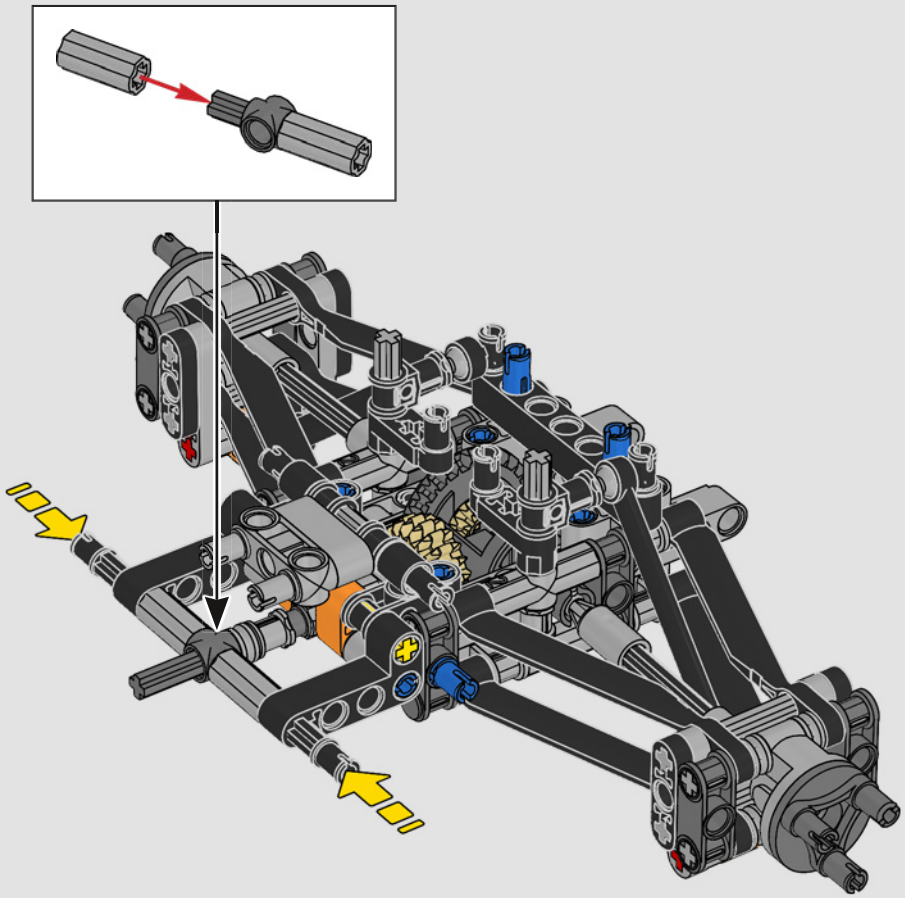

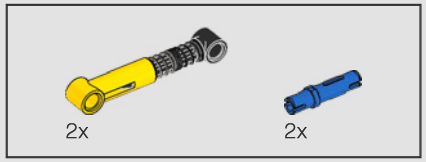

31

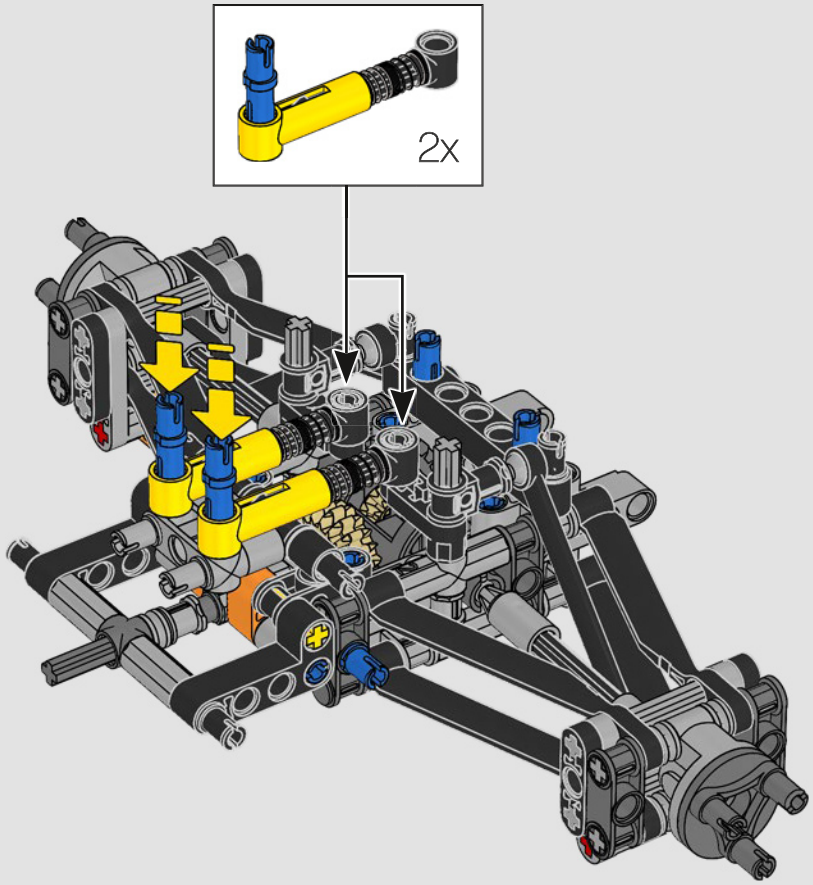

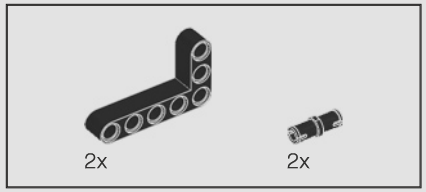

32

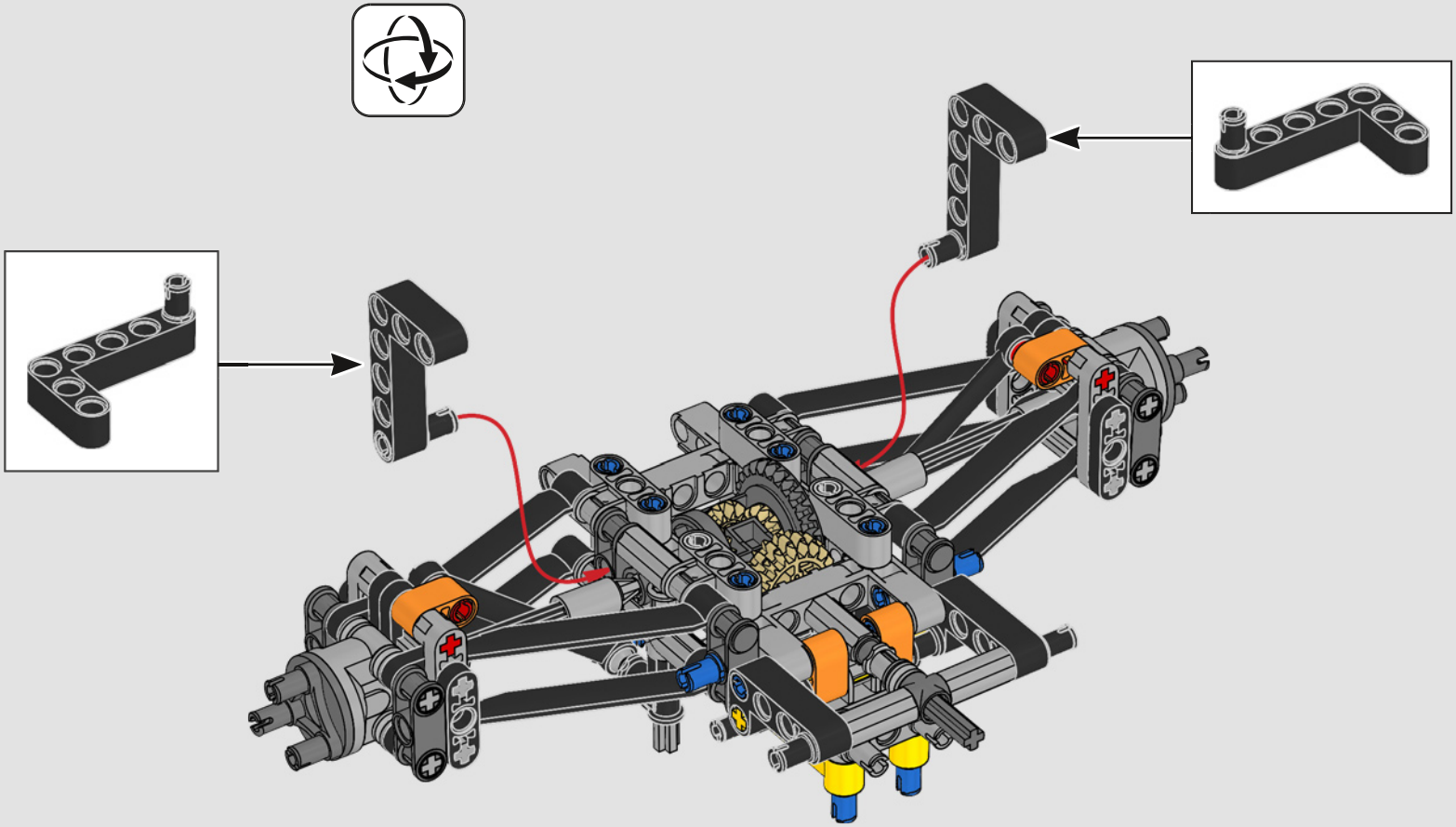

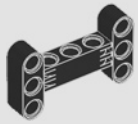

33

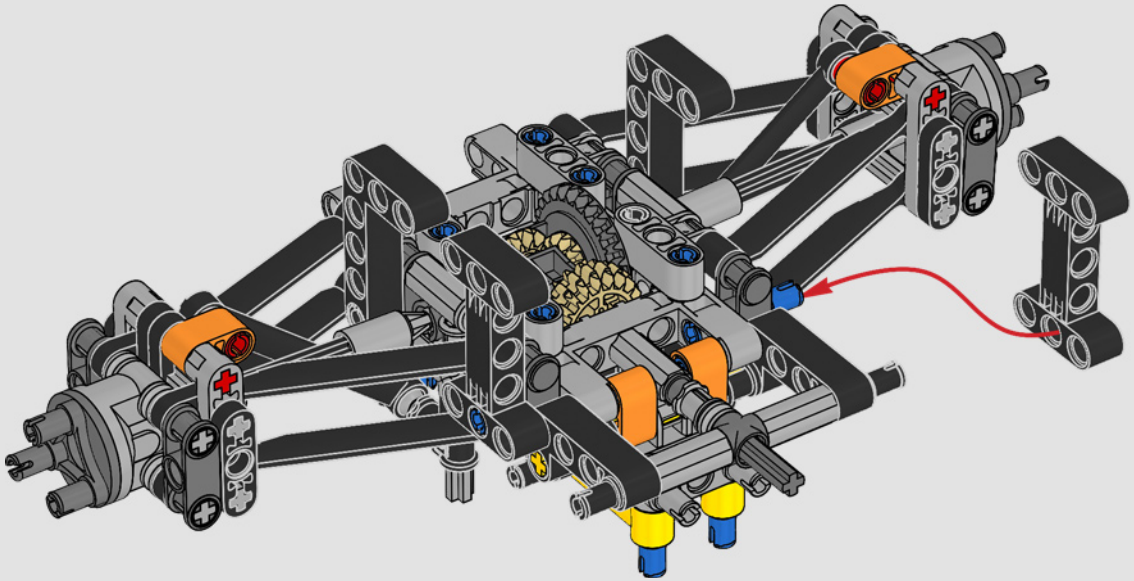

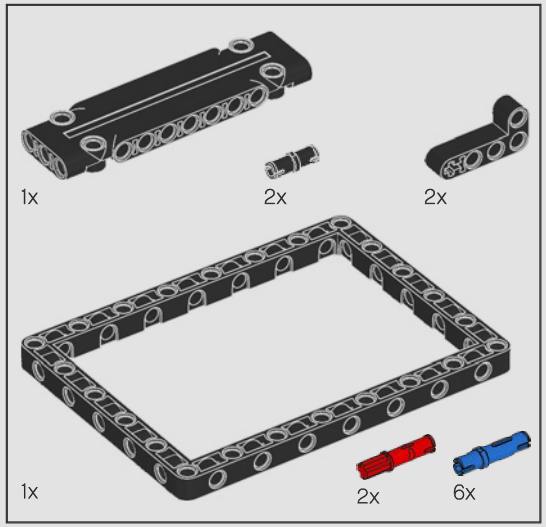

34

1

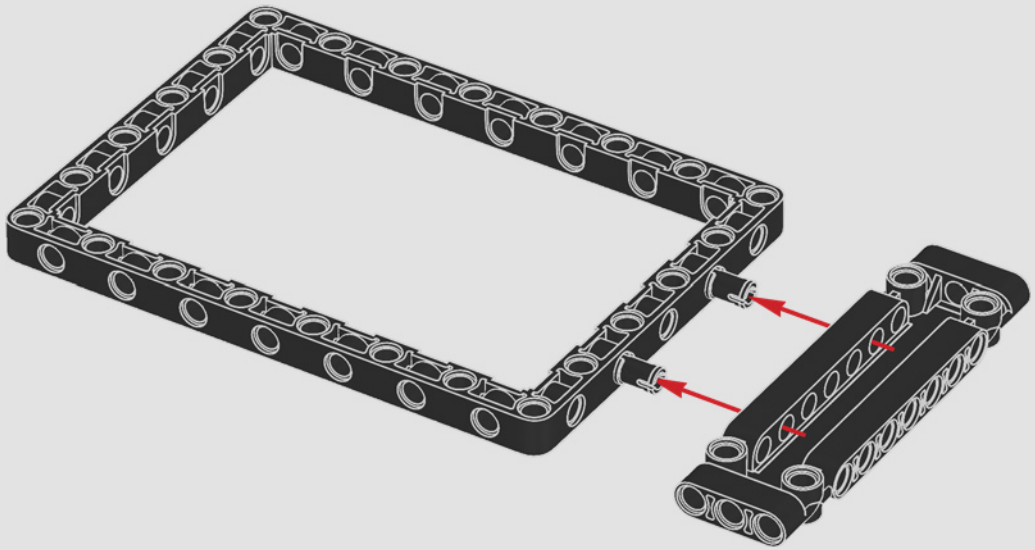

2

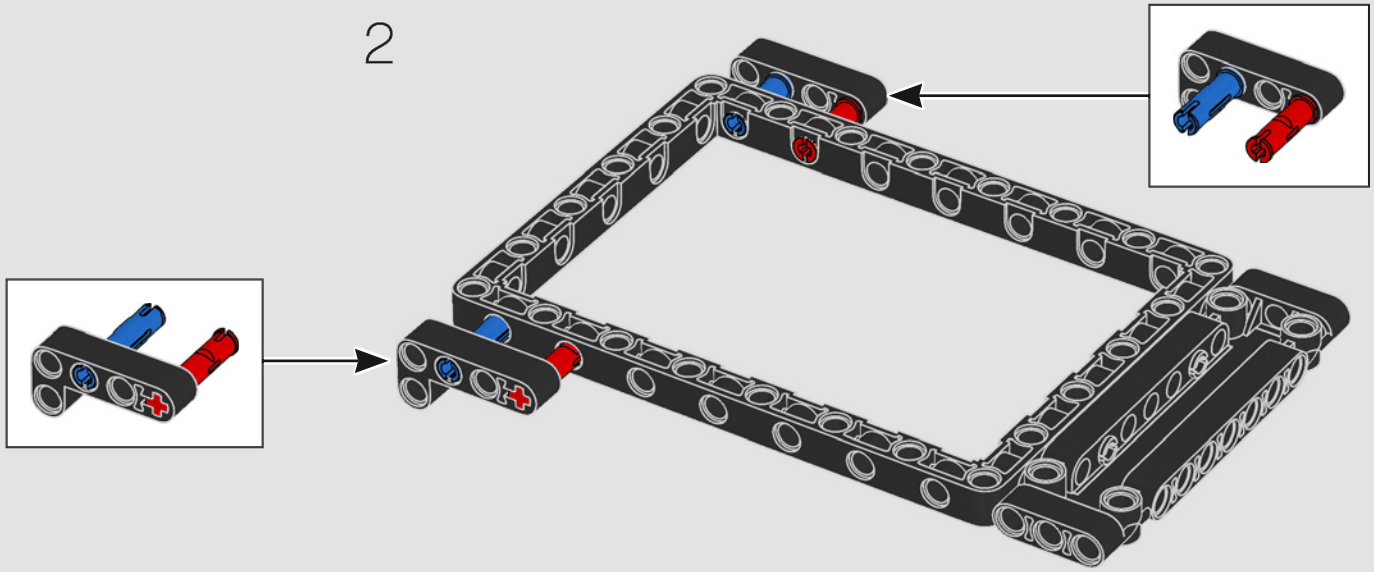

3

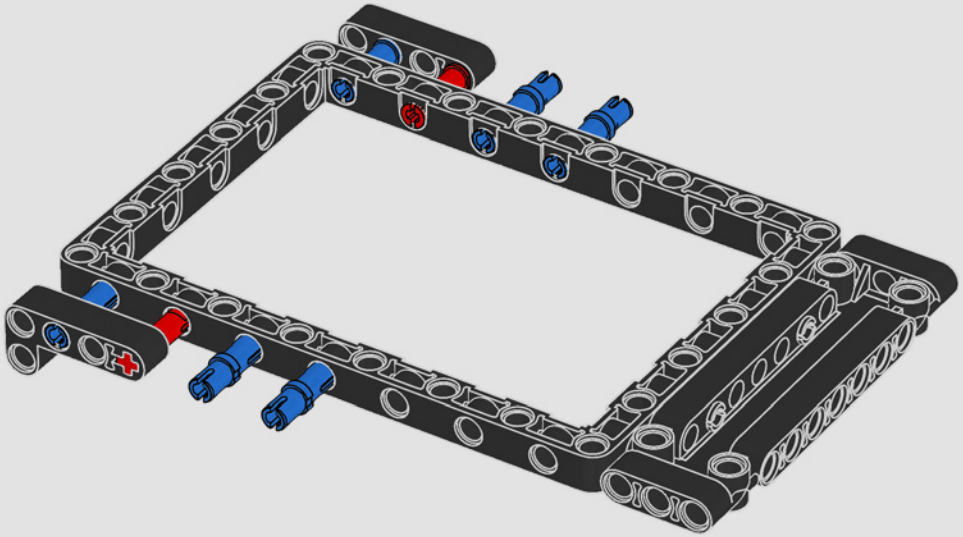

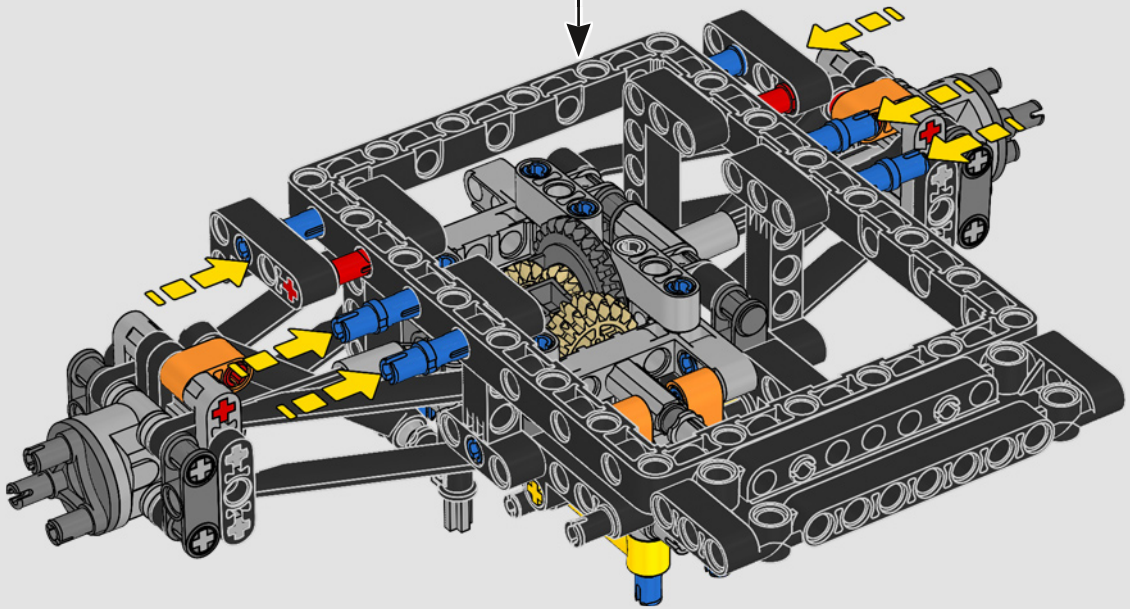

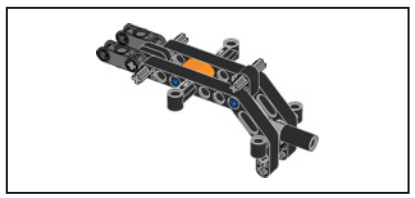

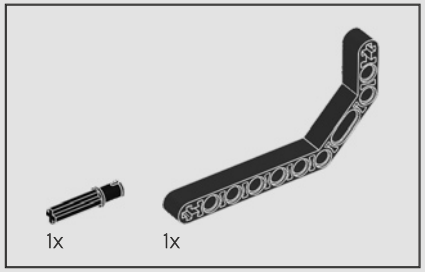

35

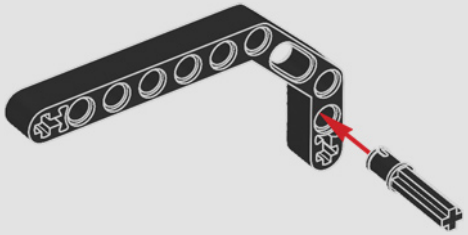

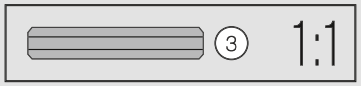

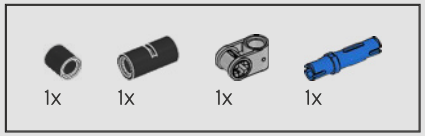

36

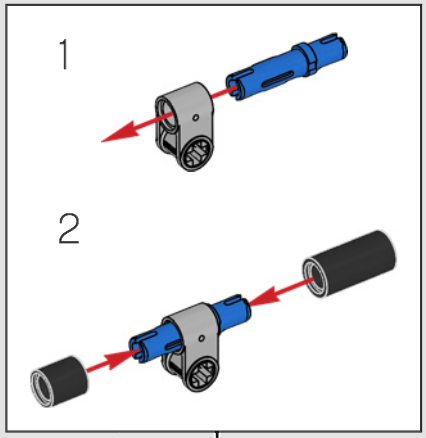

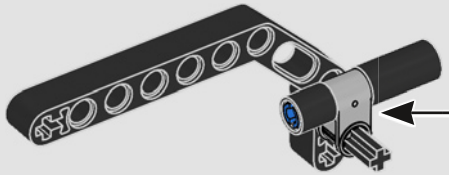

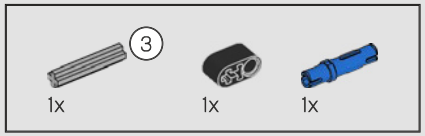

37

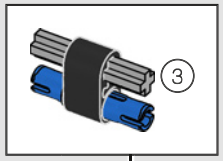

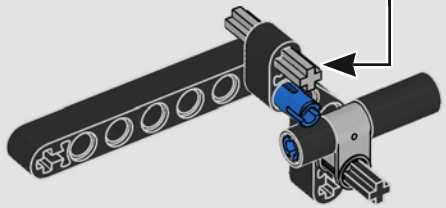

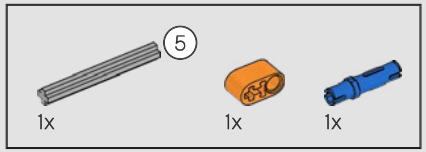

38

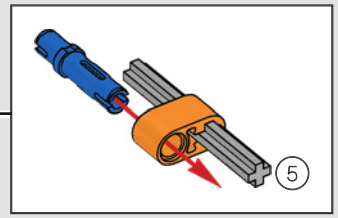

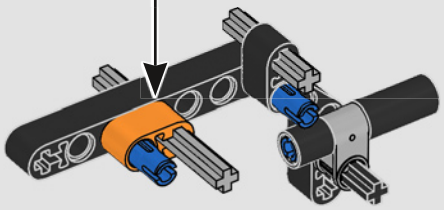

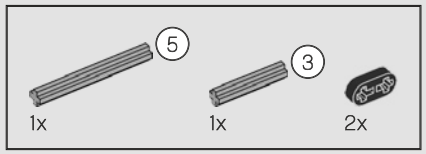

39

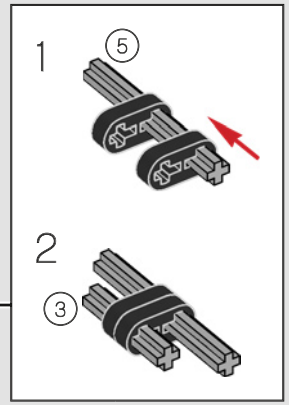

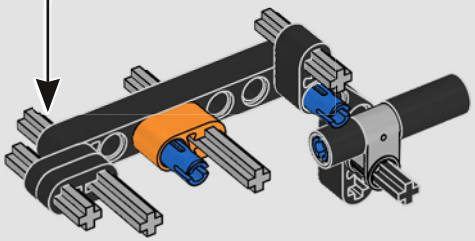

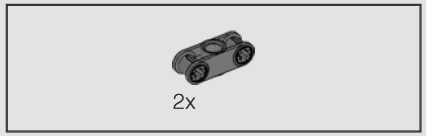

40

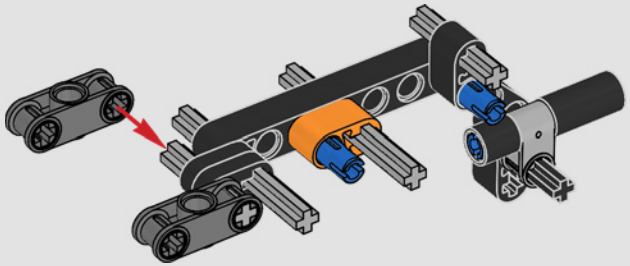

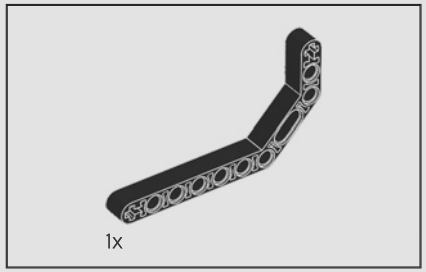

41

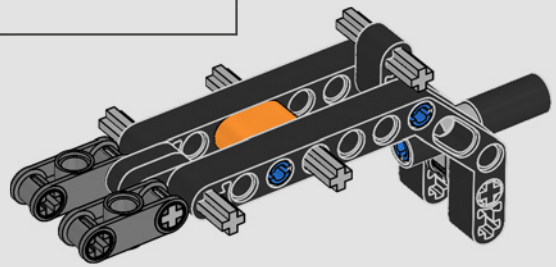

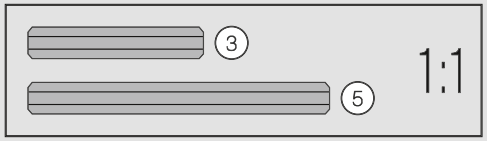

42

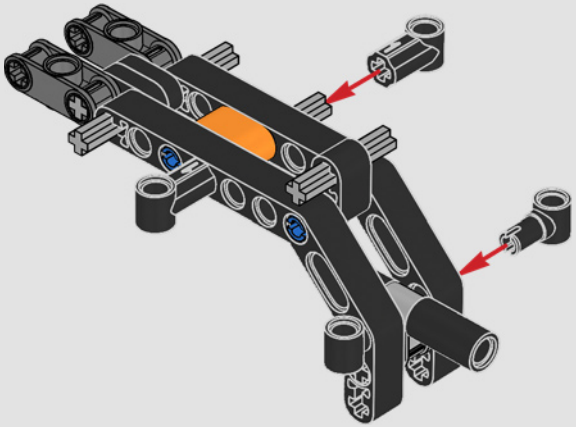

43

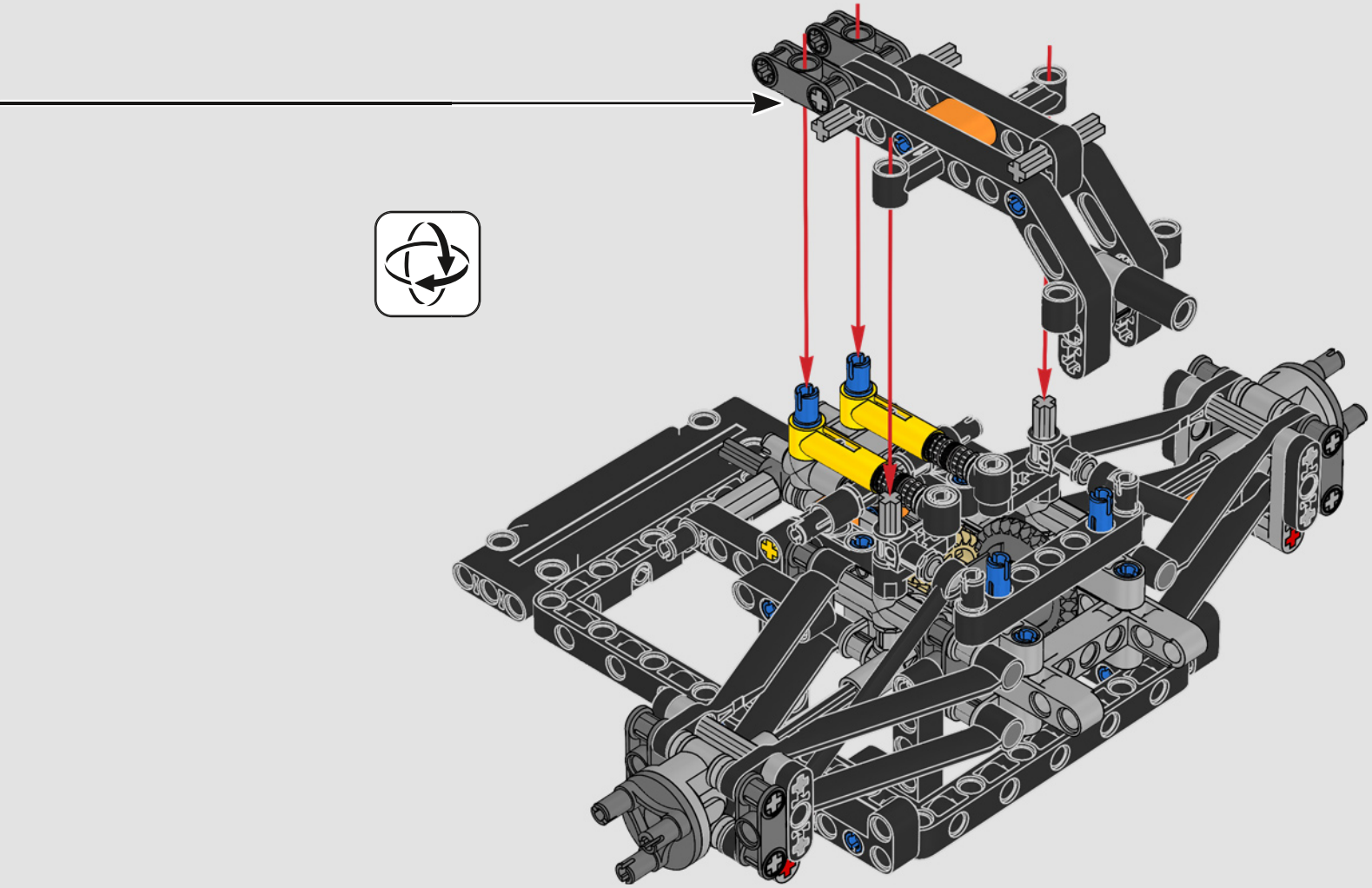

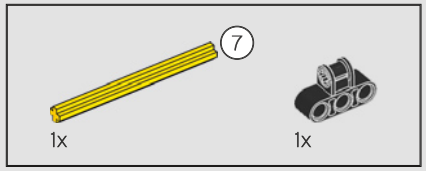

44

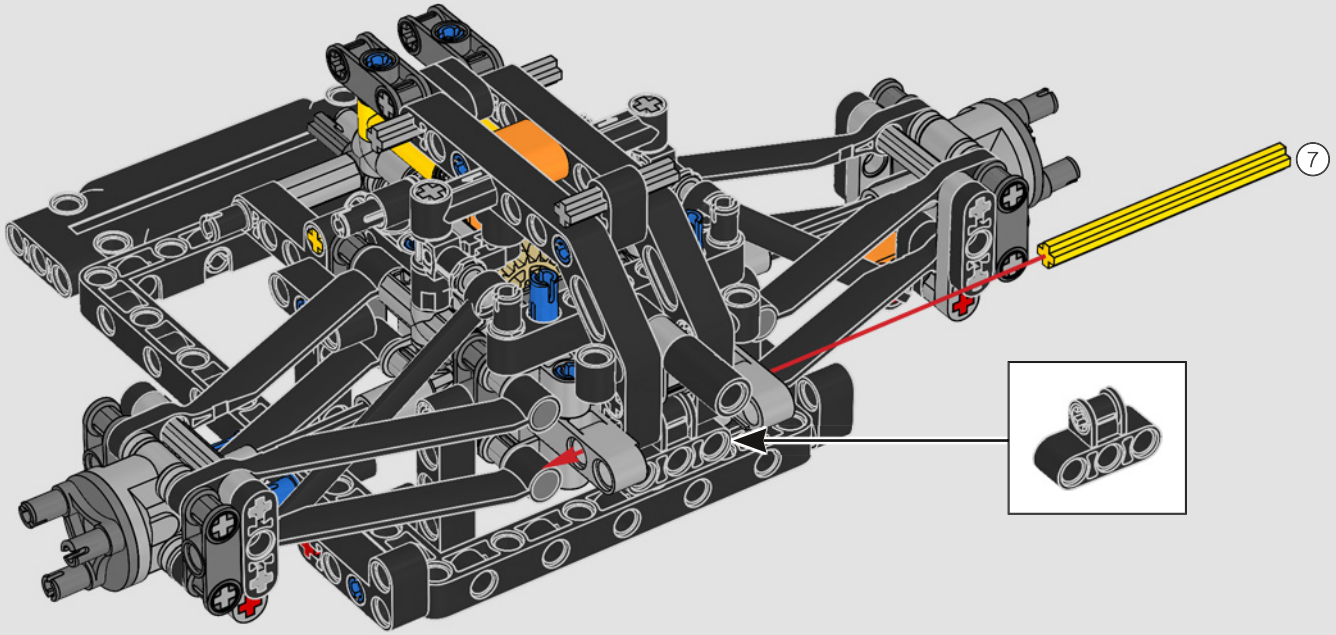

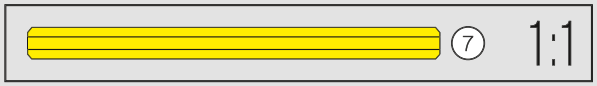

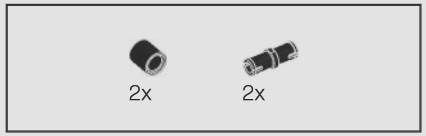

45

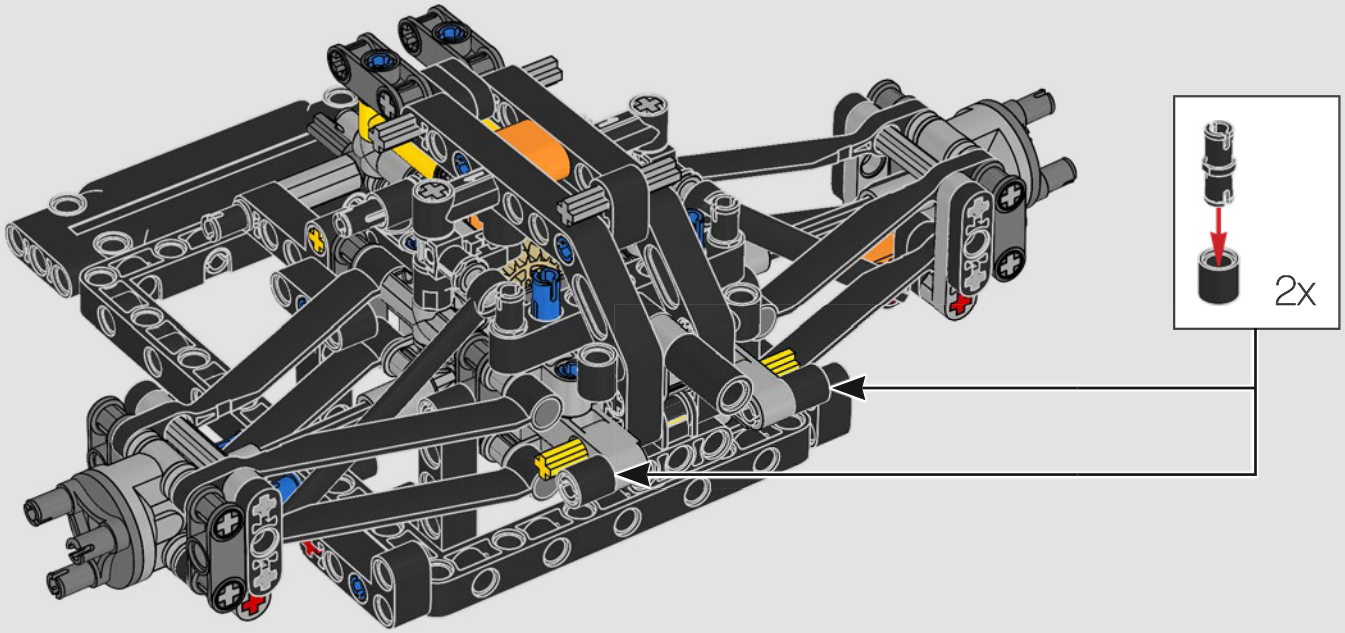

2x

46

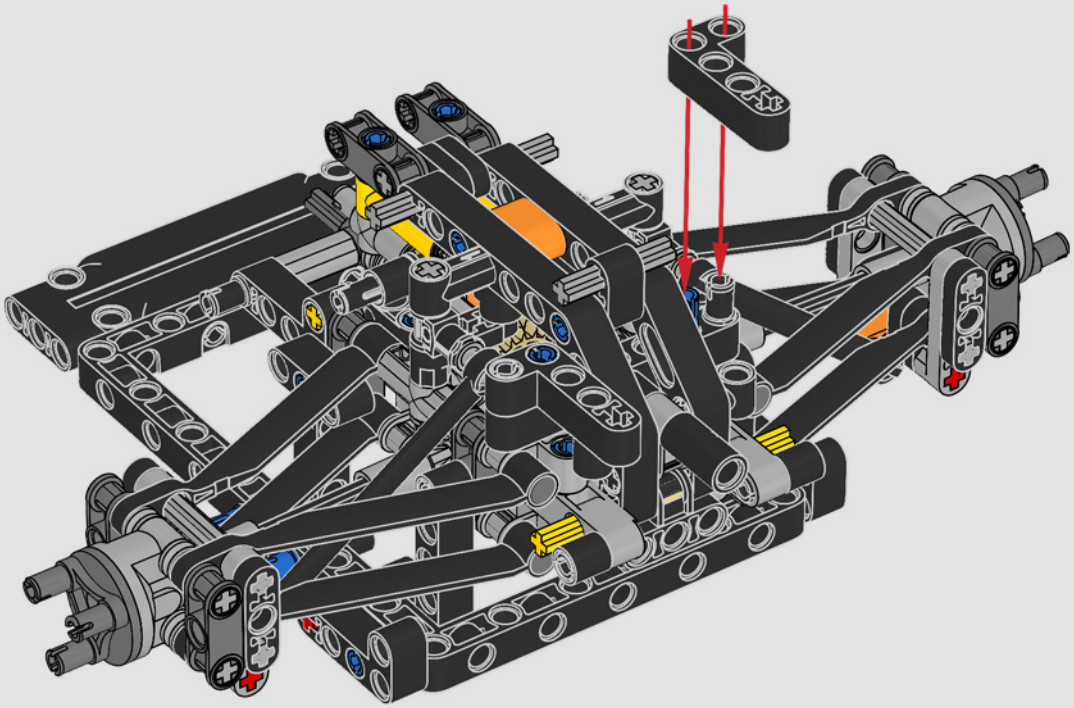

2x

47

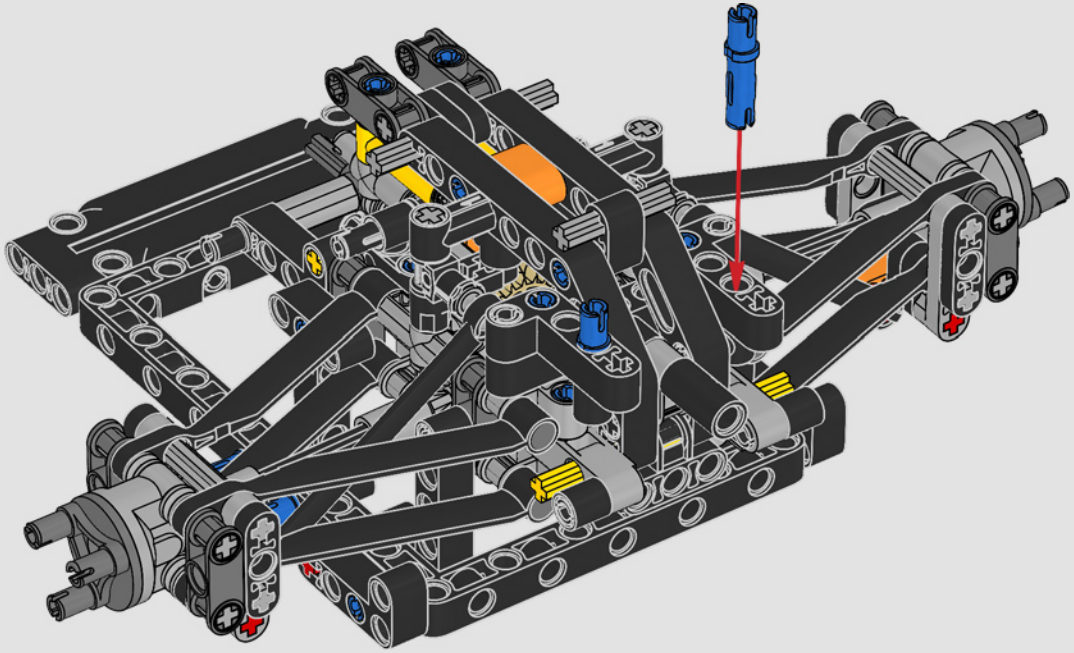

48

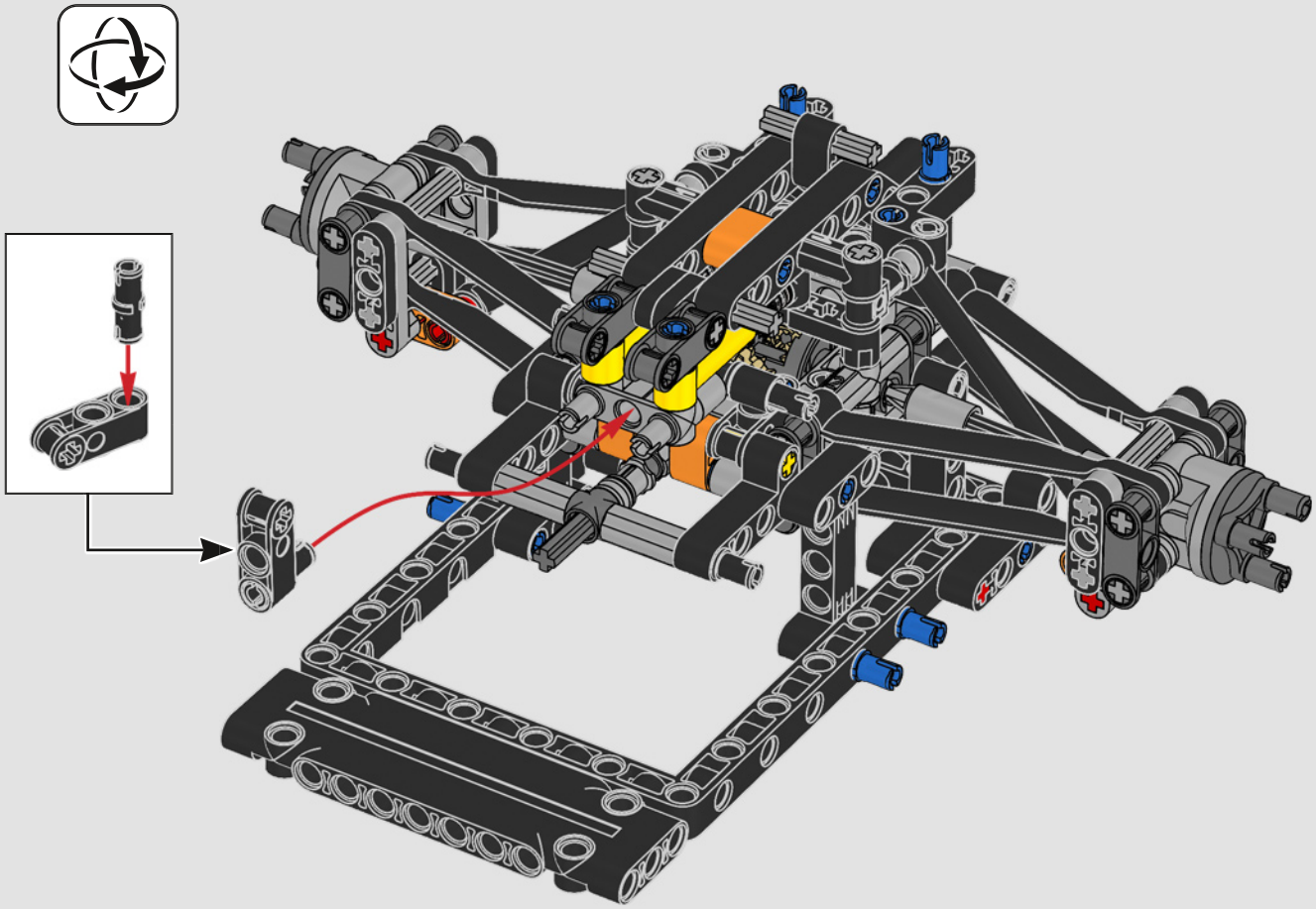

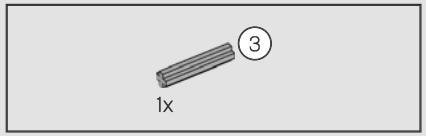

49

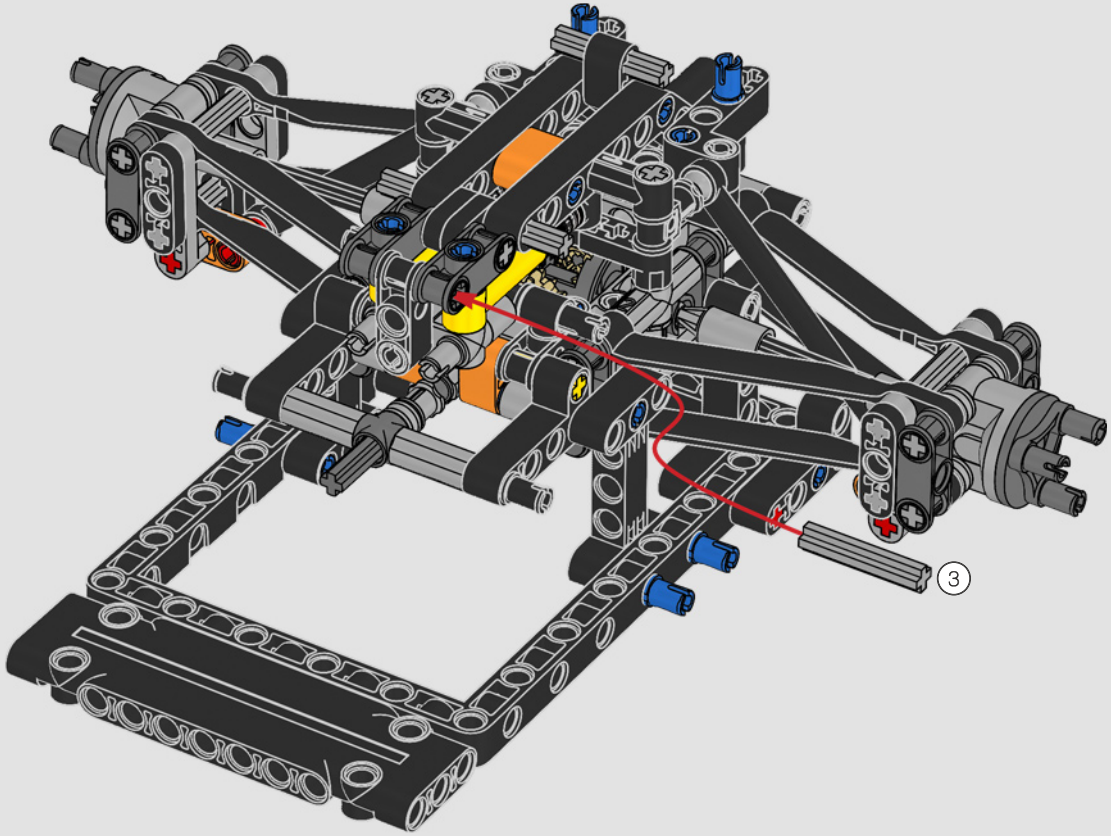

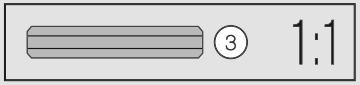

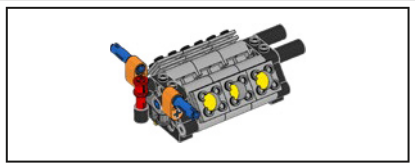

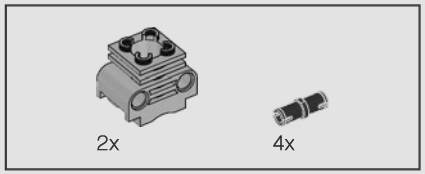

50

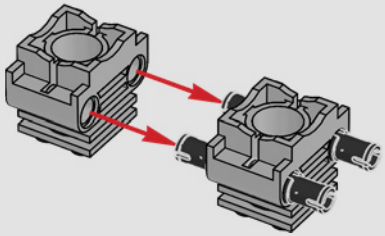

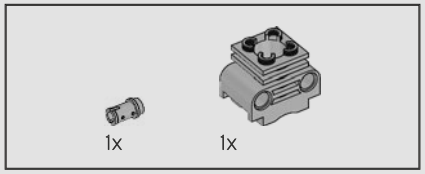

51

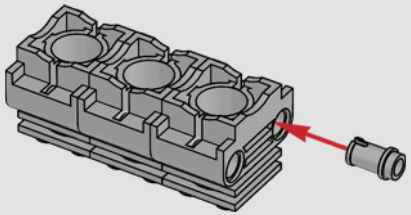

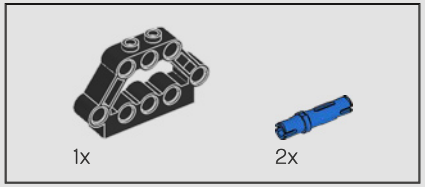

52

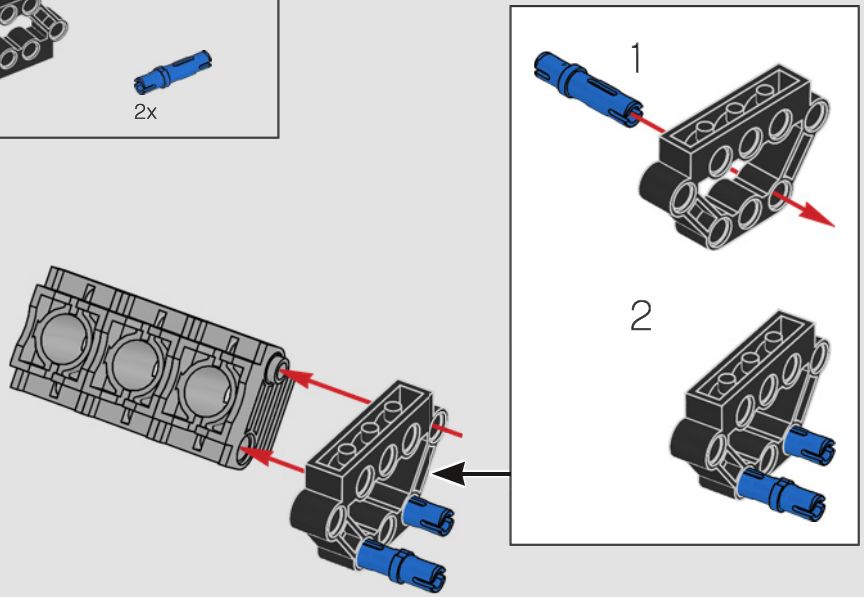

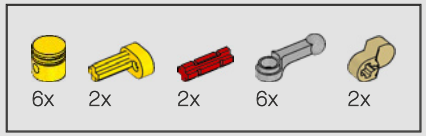

53

1

2

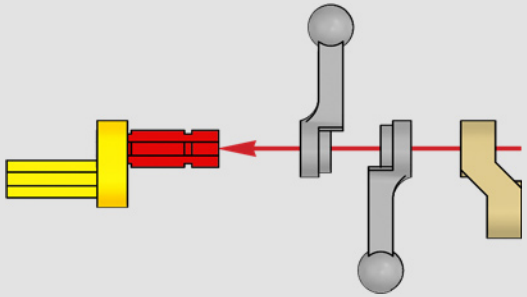

3

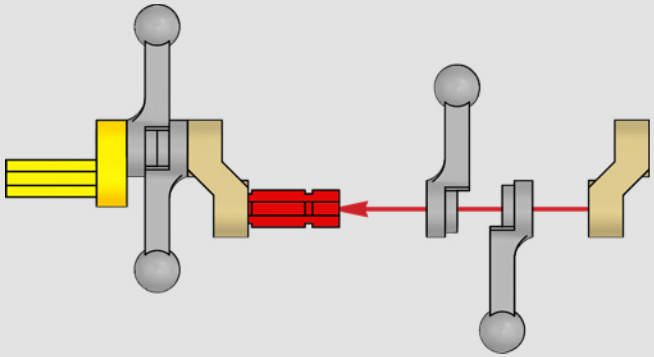

4

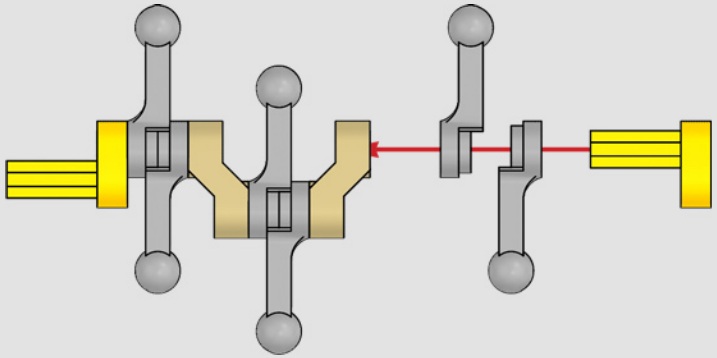

5

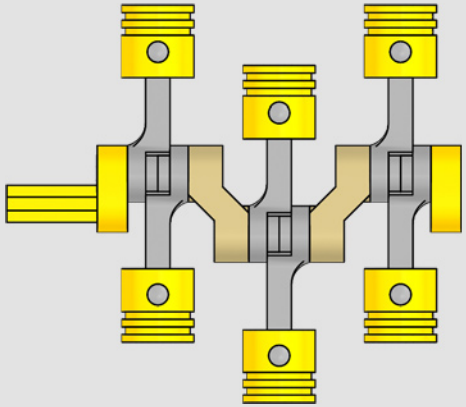

1:1

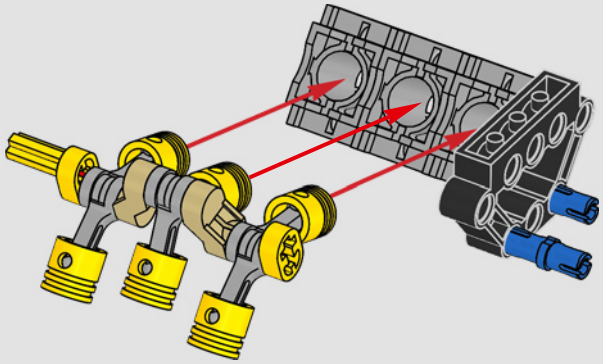

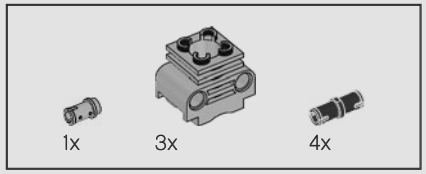

54

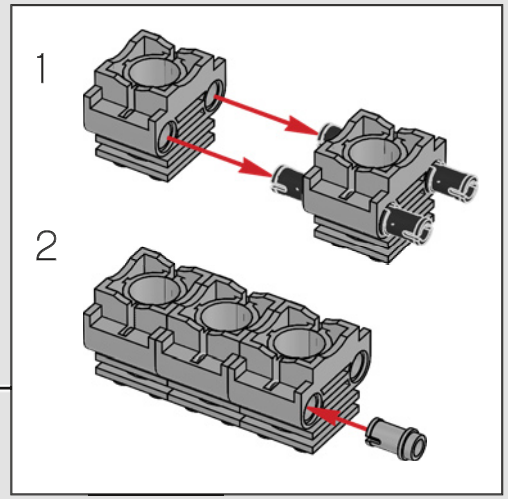

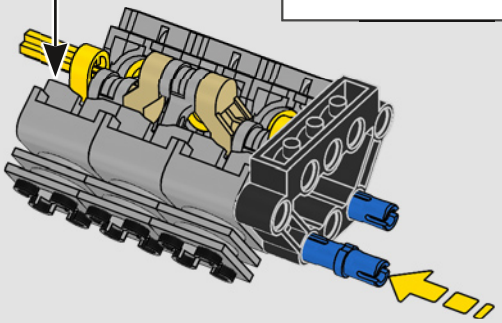

55

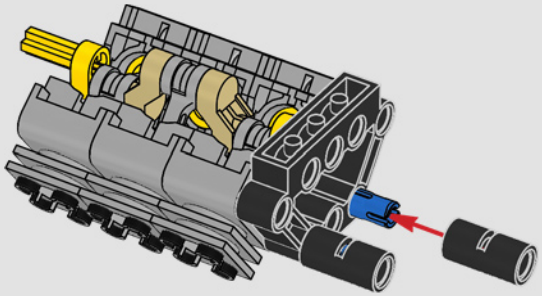

56

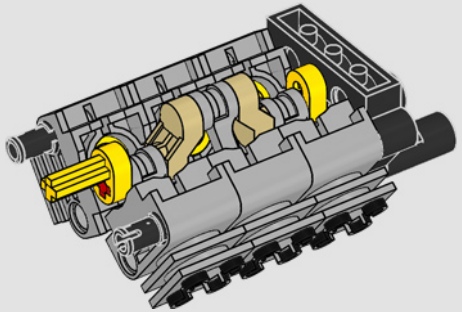

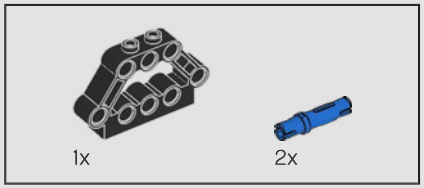

57

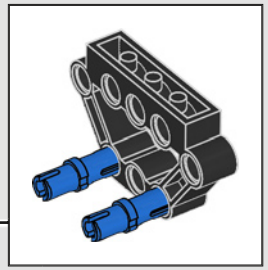

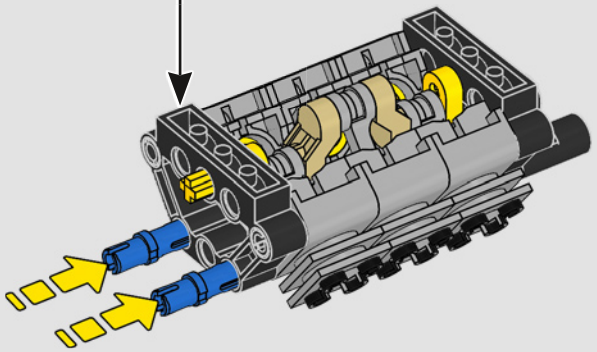

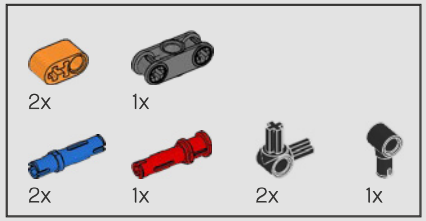

58

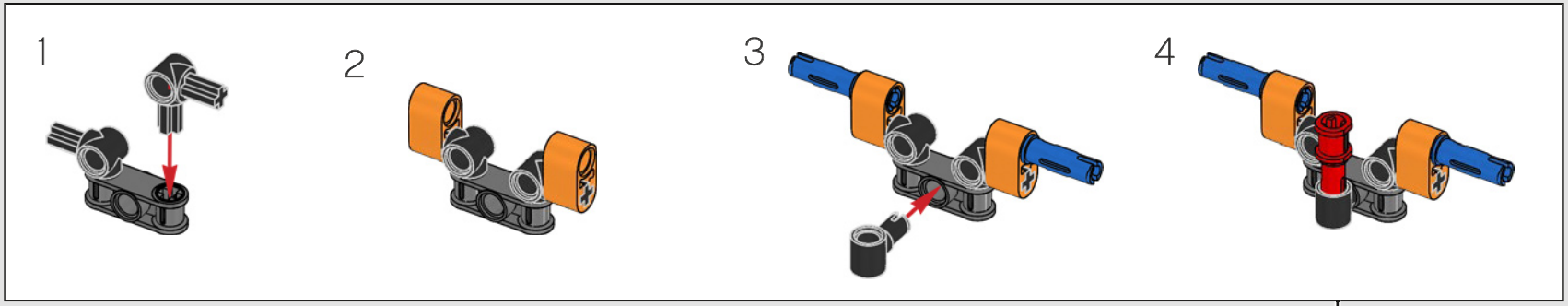

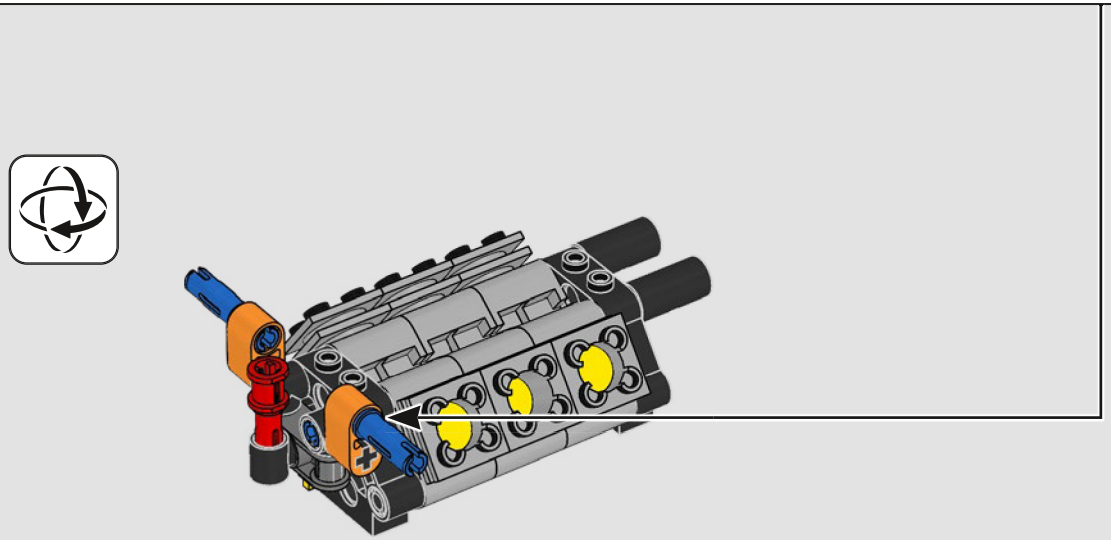

59

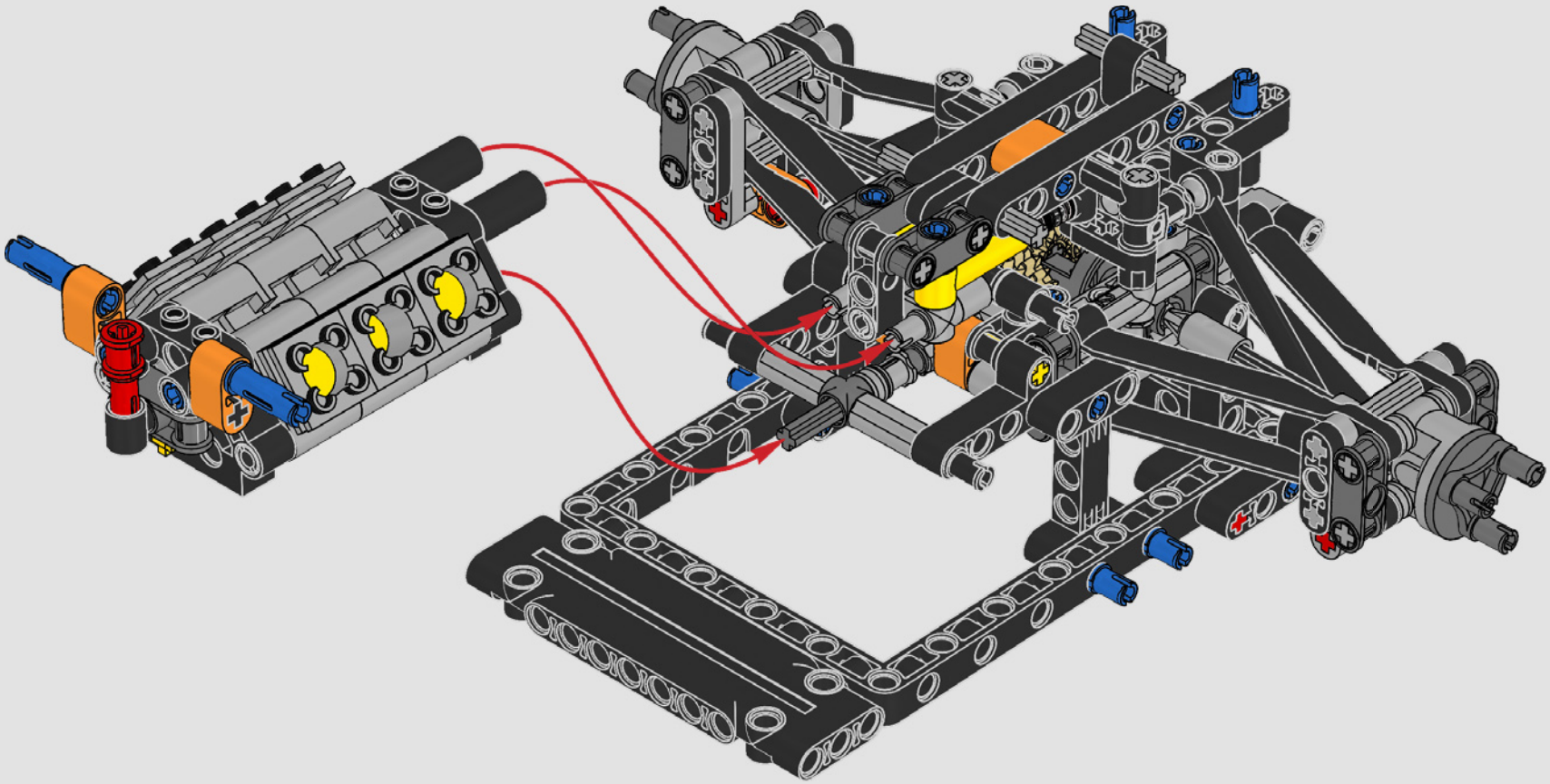

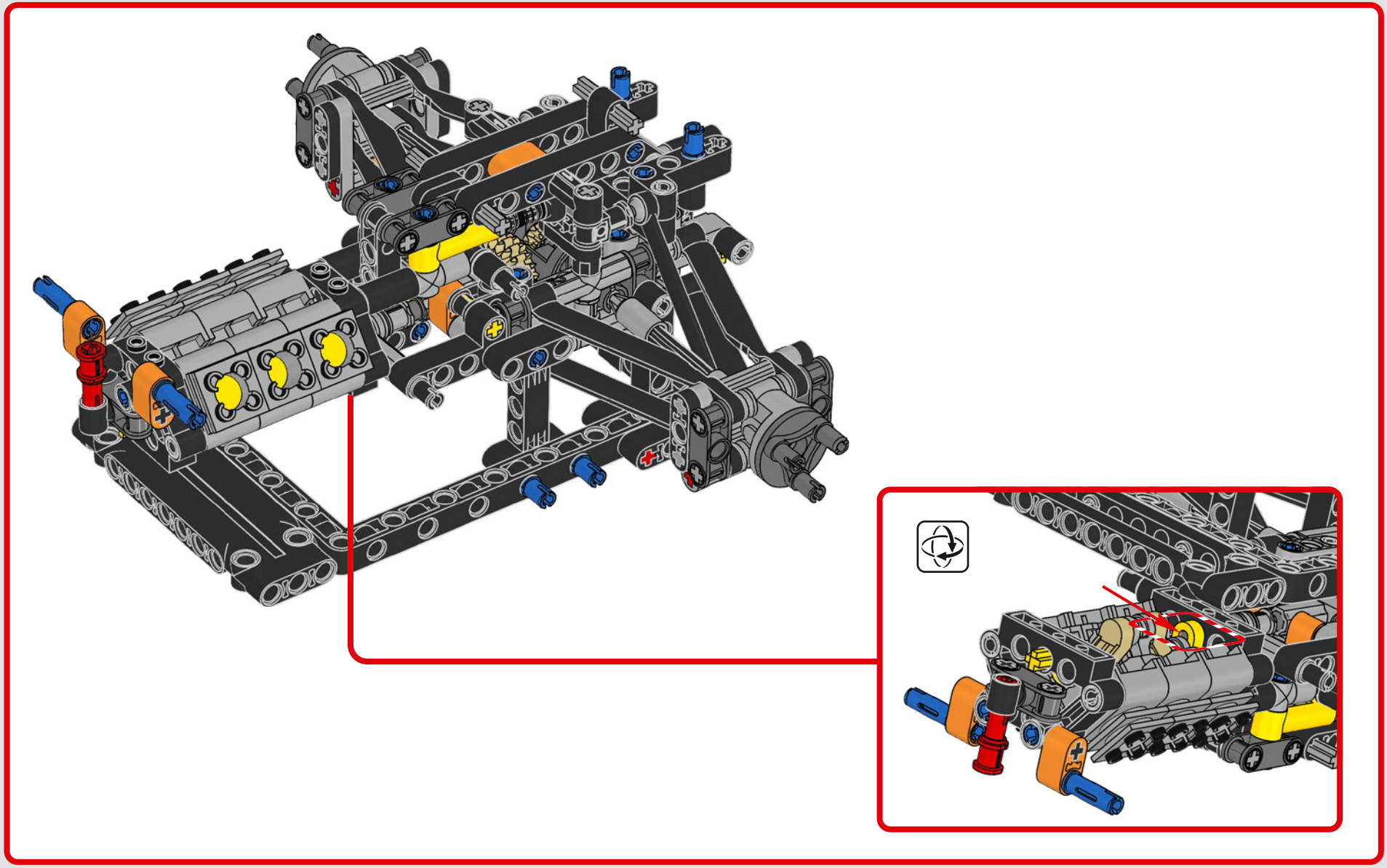

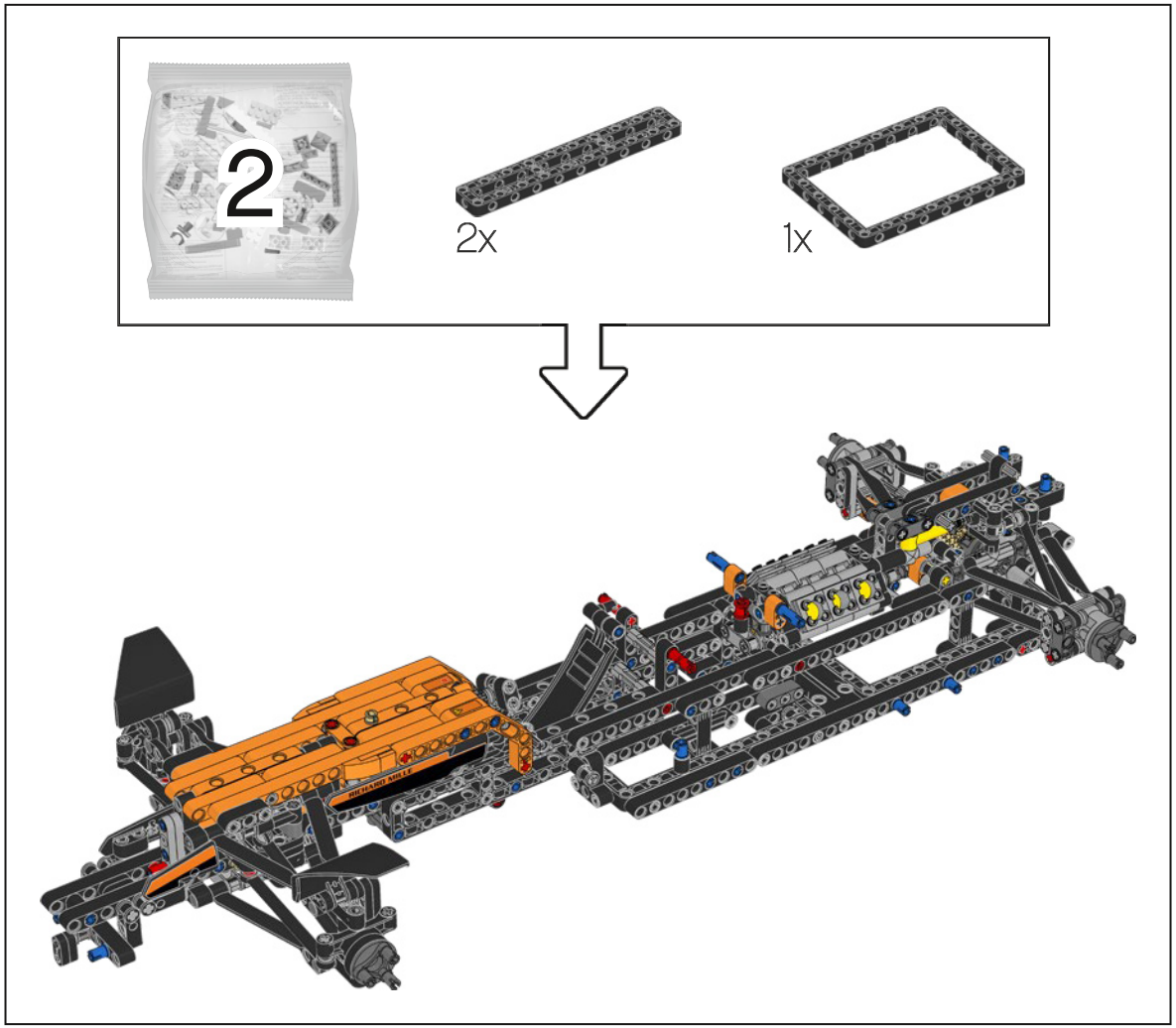
2
2x
1x

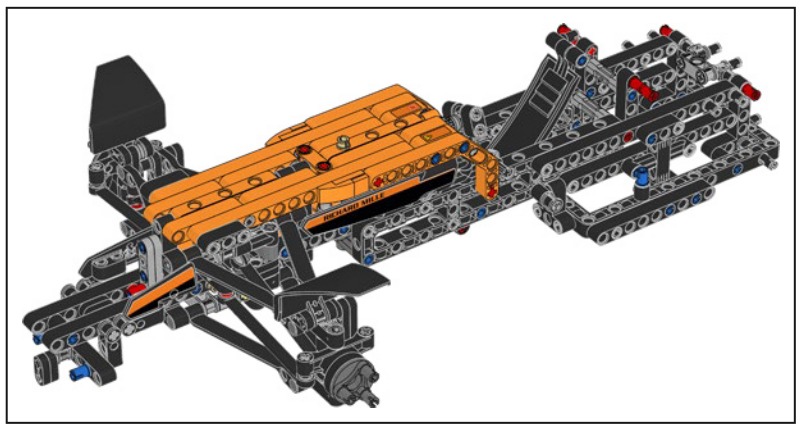

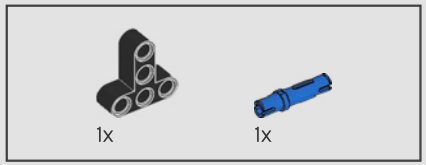

60

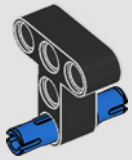

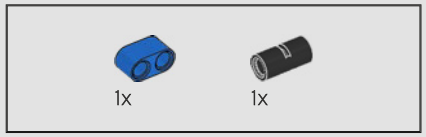

61

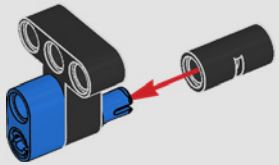

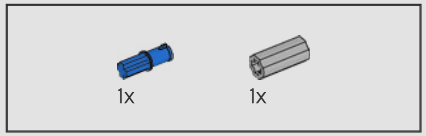

62

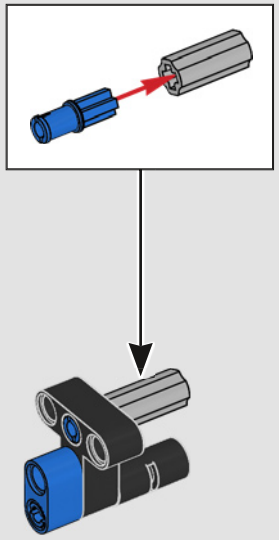

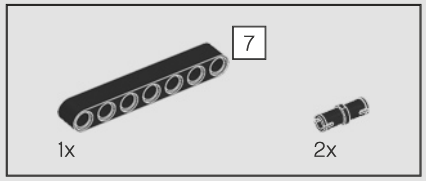

63

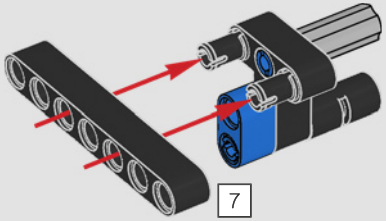

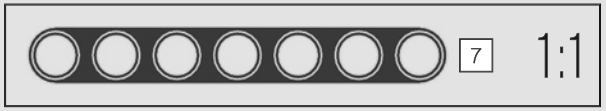

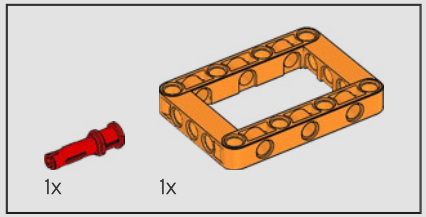

64

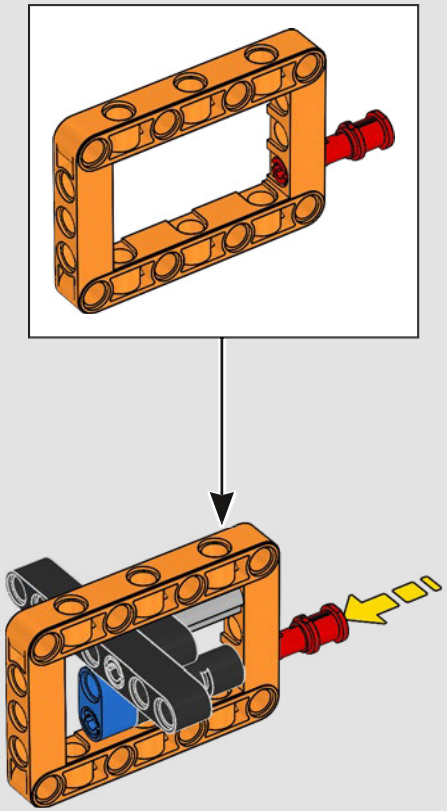

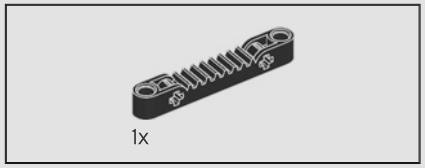

65

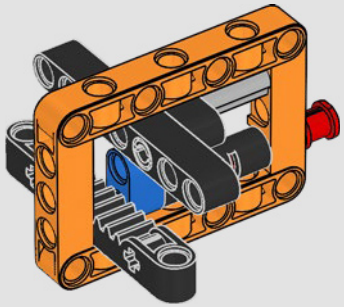

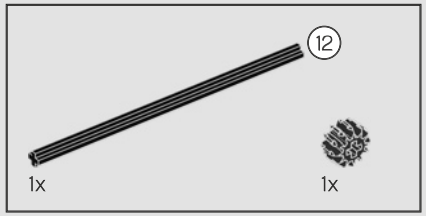

66

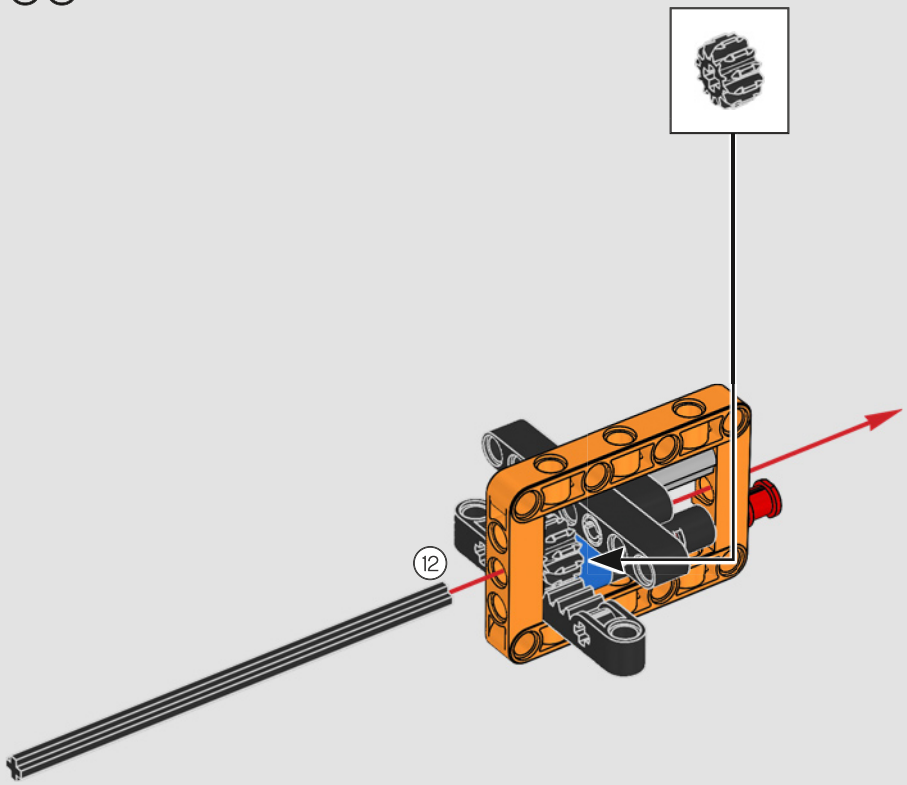

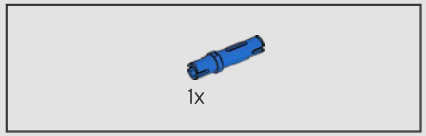

67

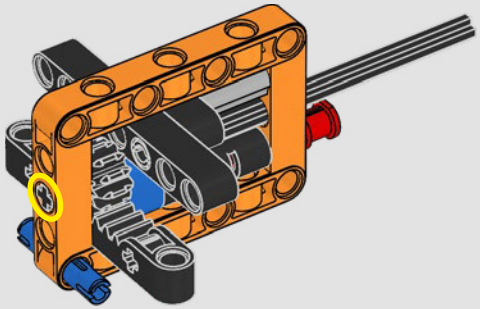

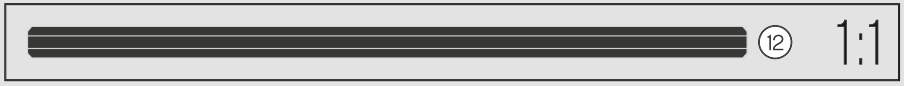

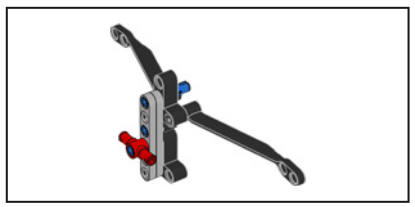

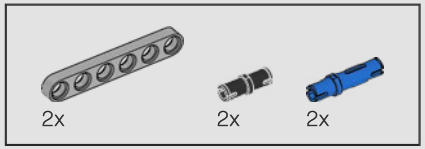

68

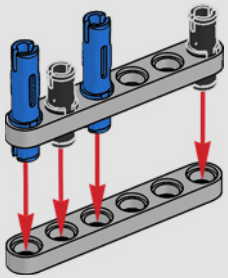

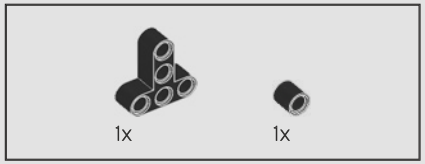

69

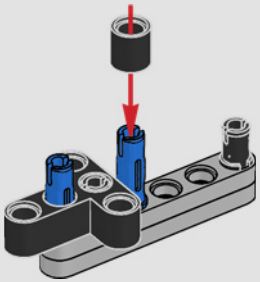

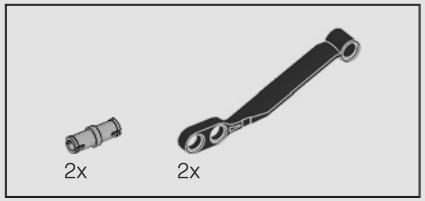

70

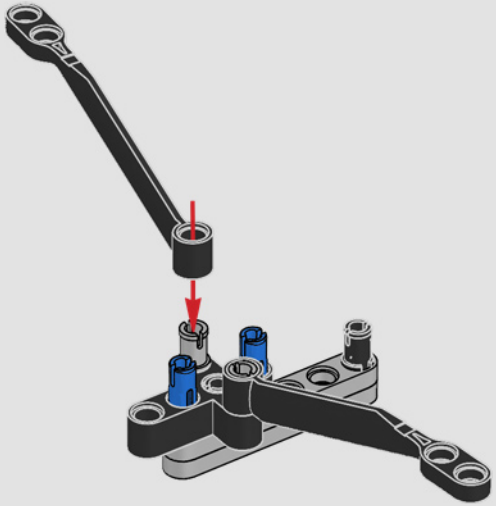

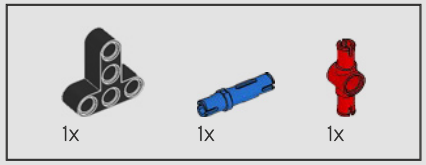

71

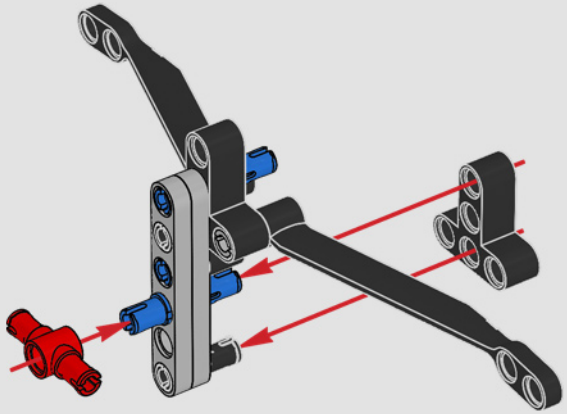

72

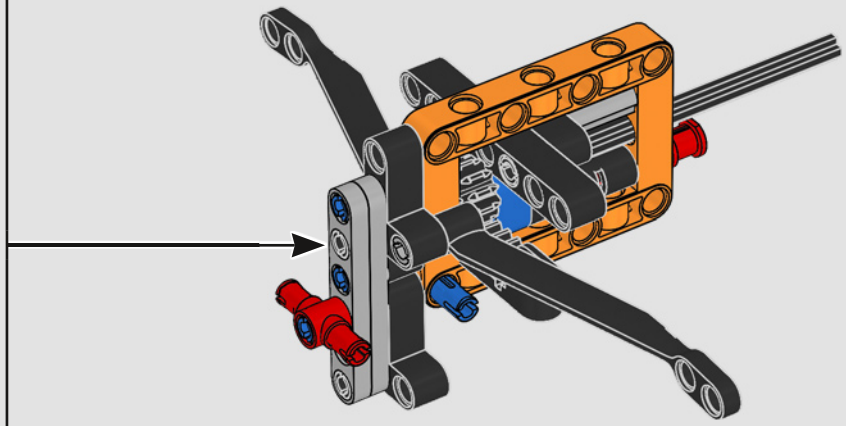

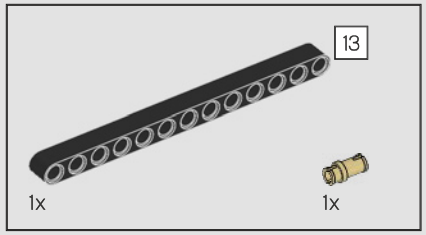

73

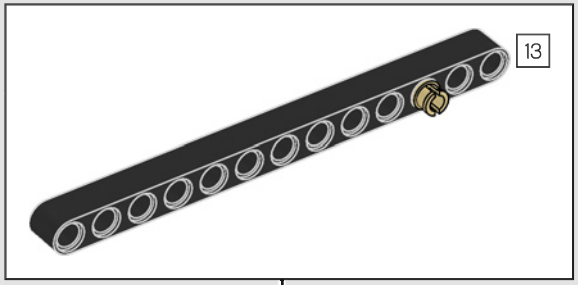

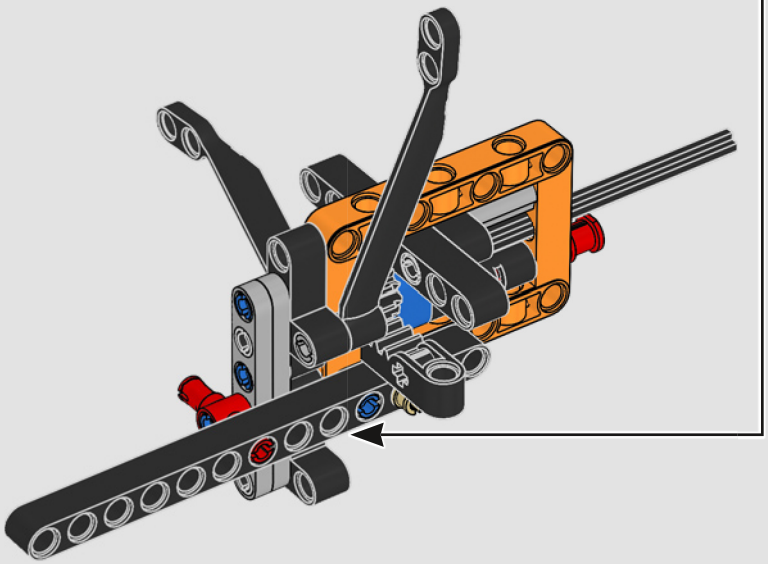

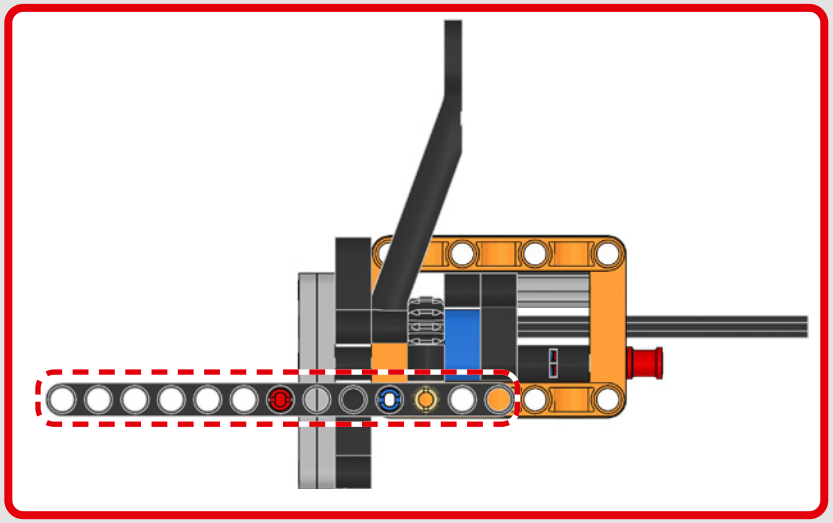

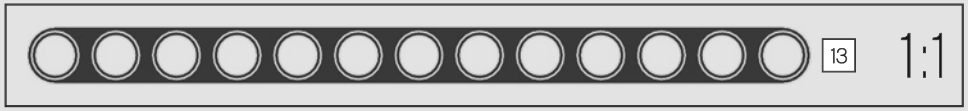

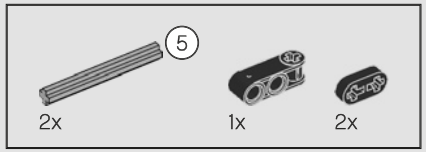

74

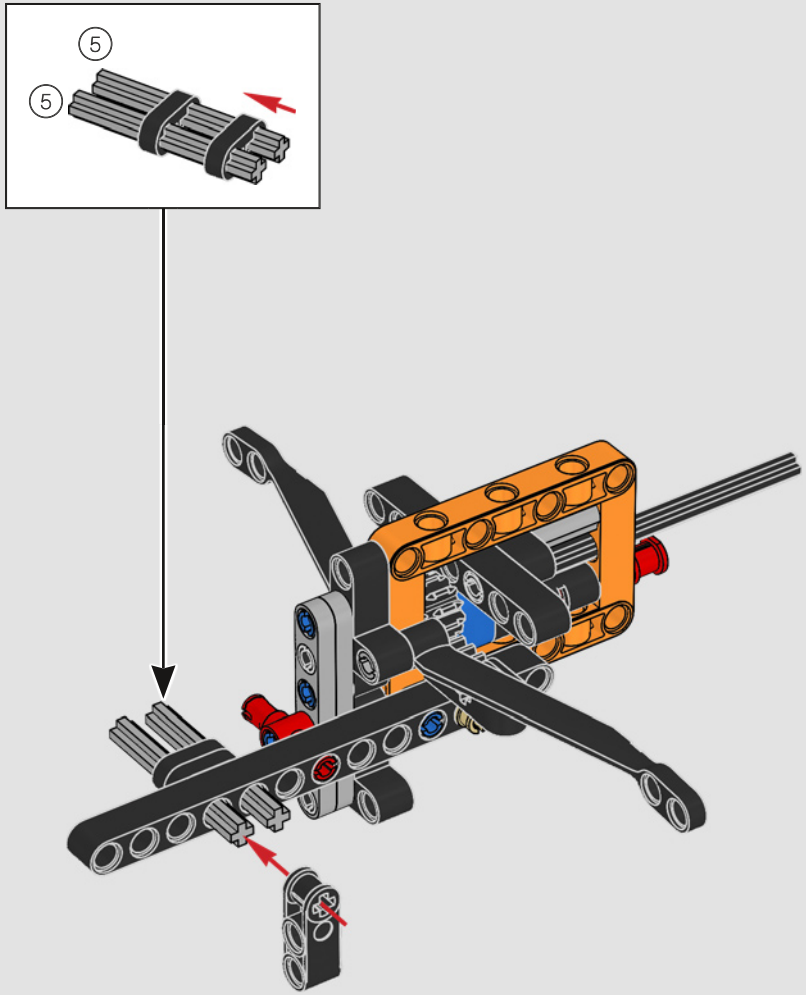

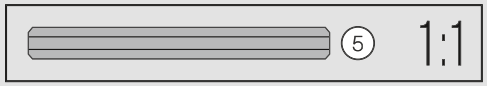

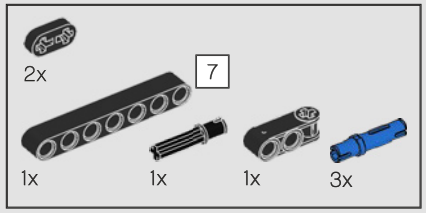

75

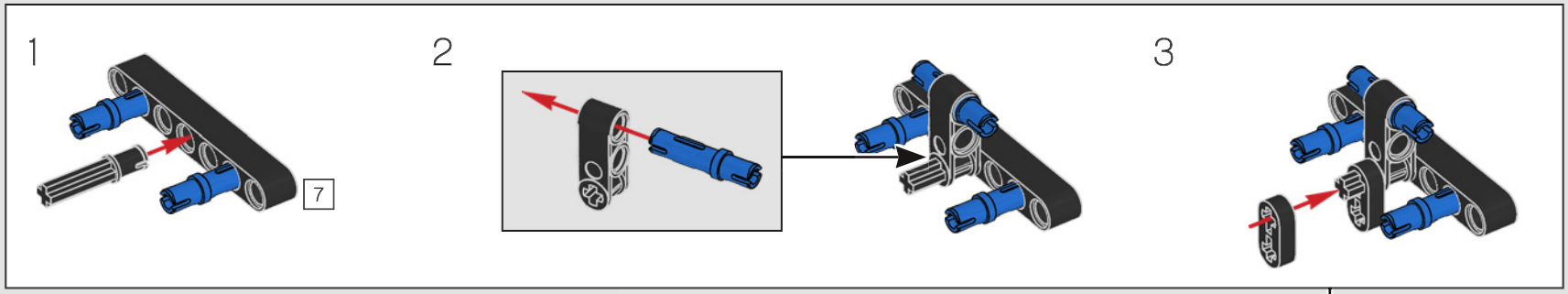

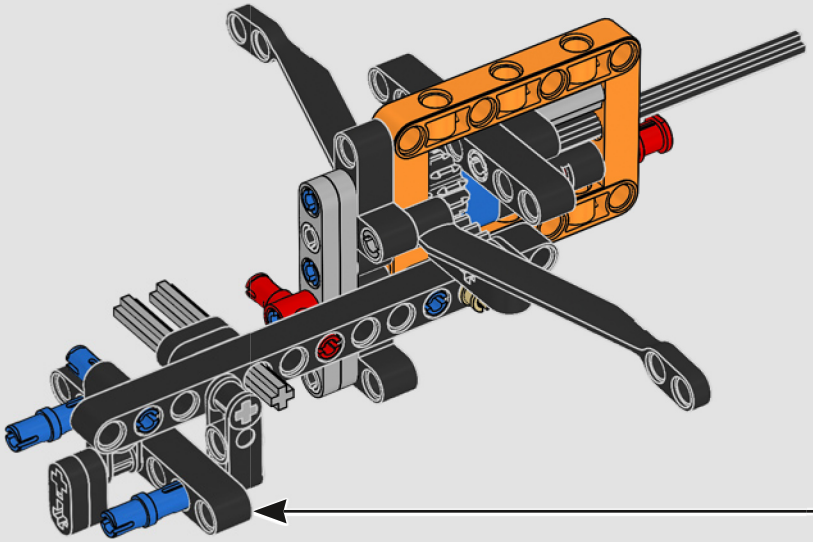

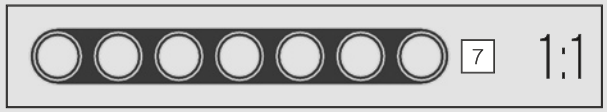

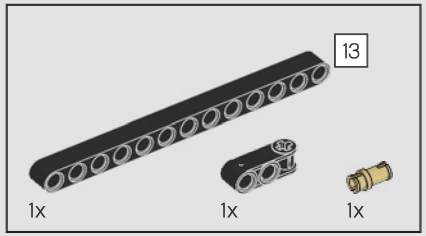

76

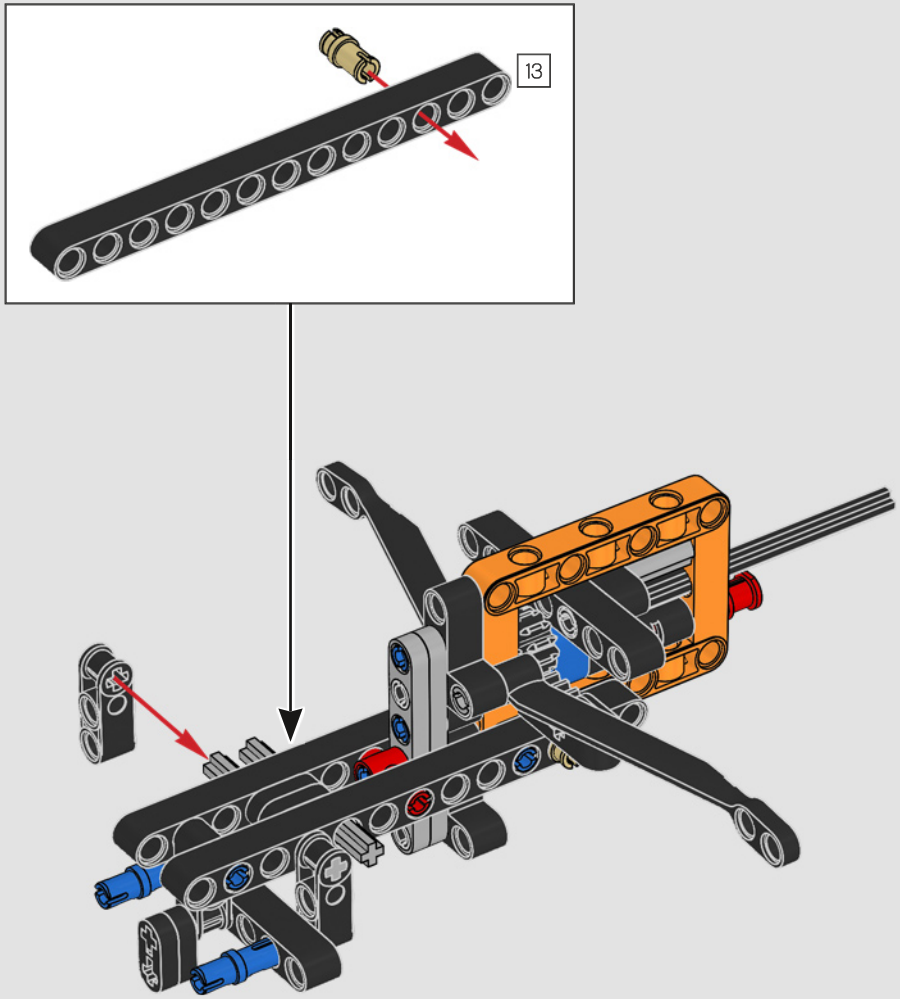

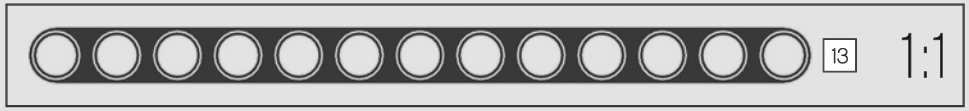

77

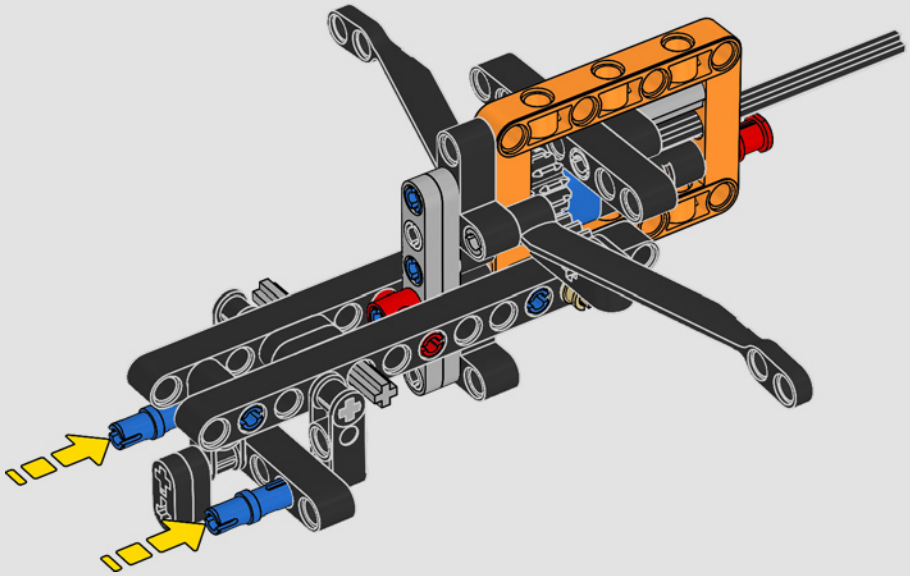

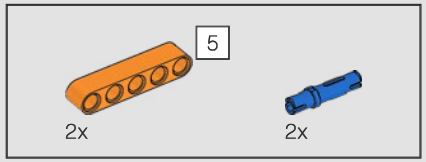

78

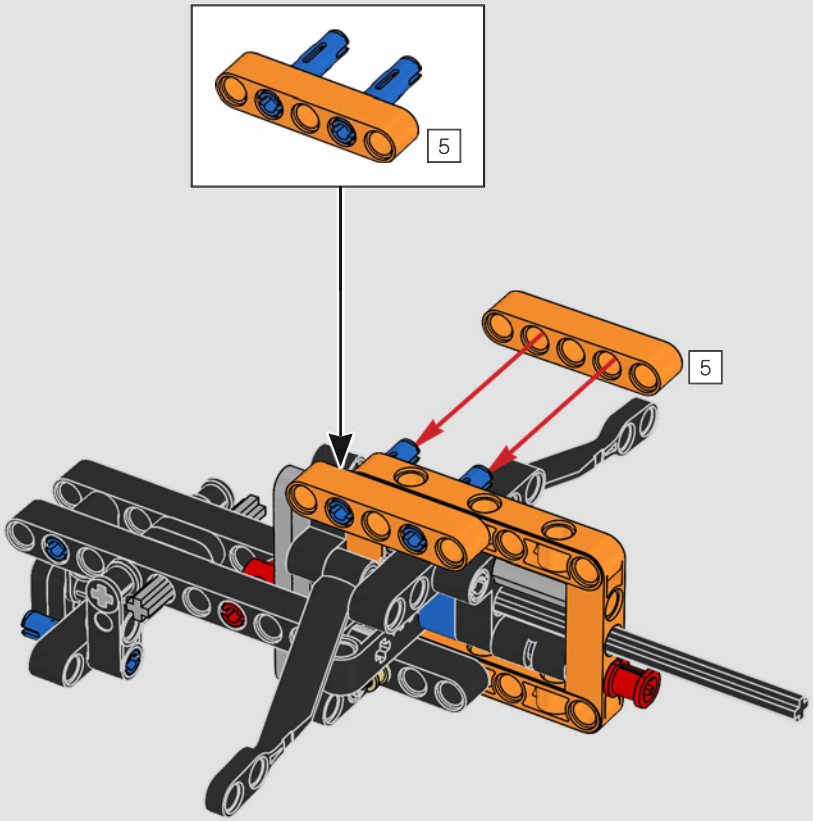

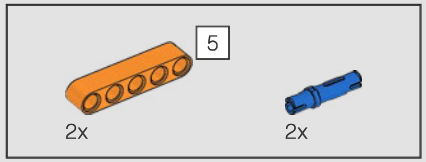

79

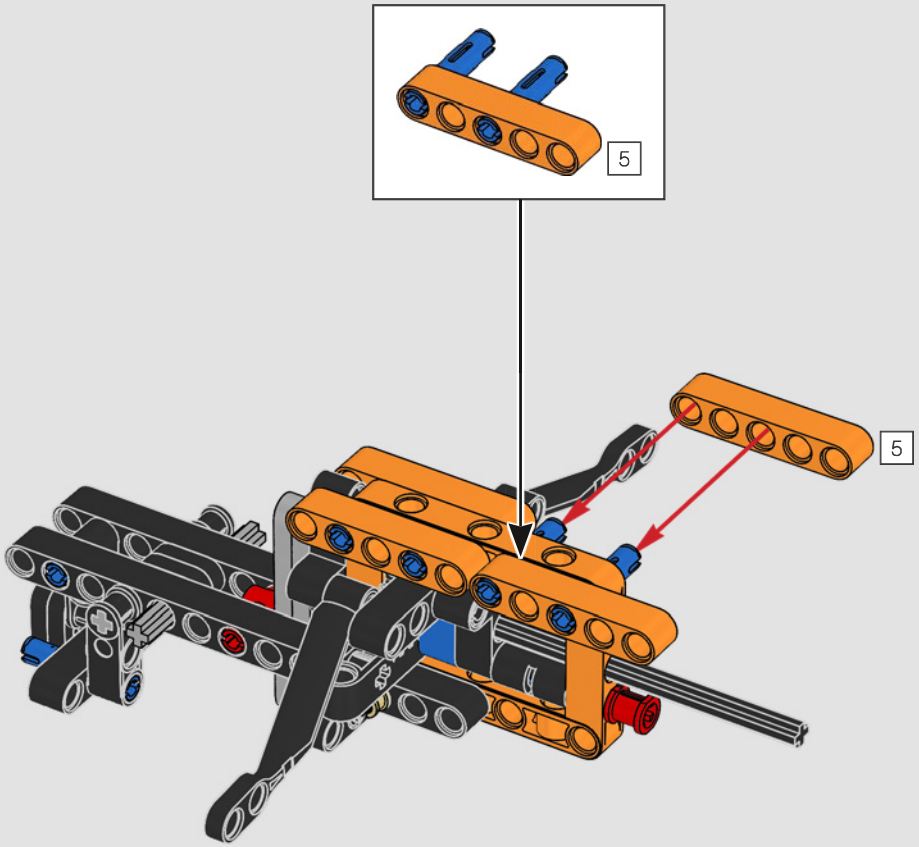

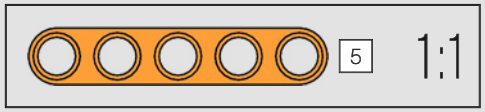

80

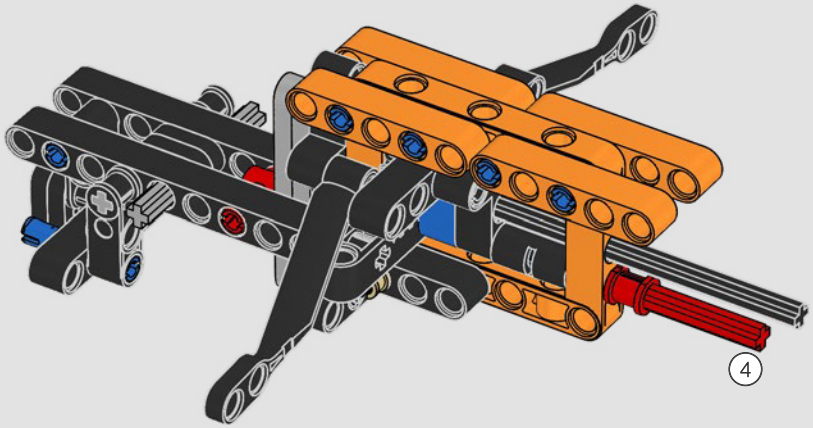

1:1

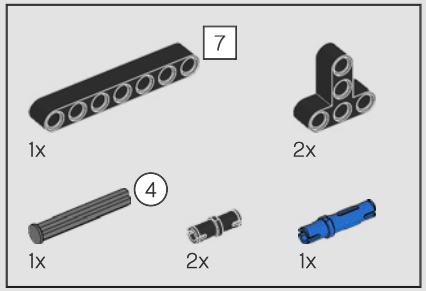

81

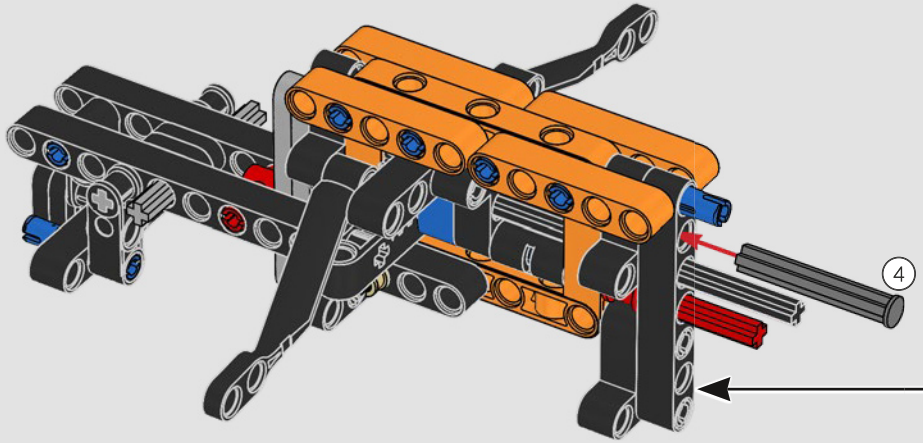

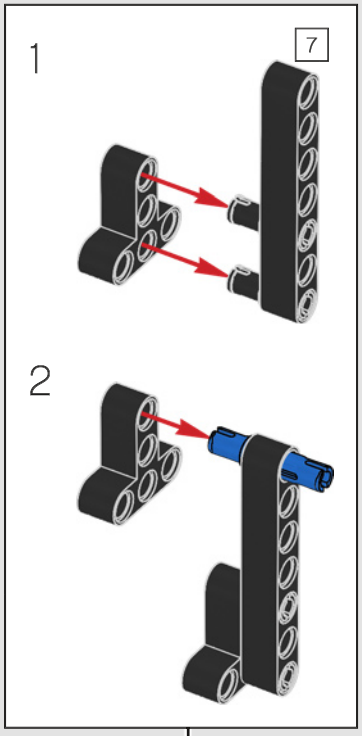

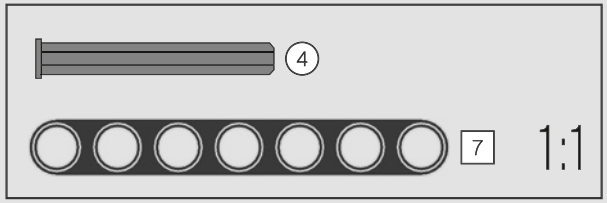

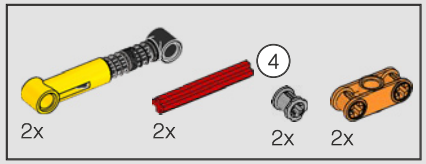

82

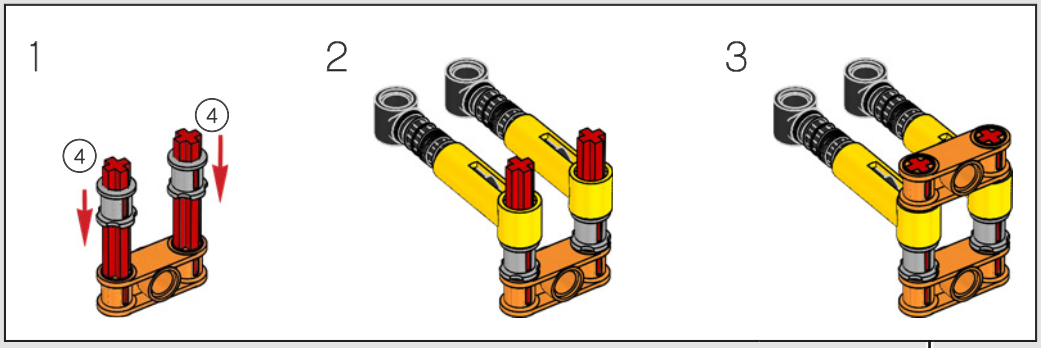

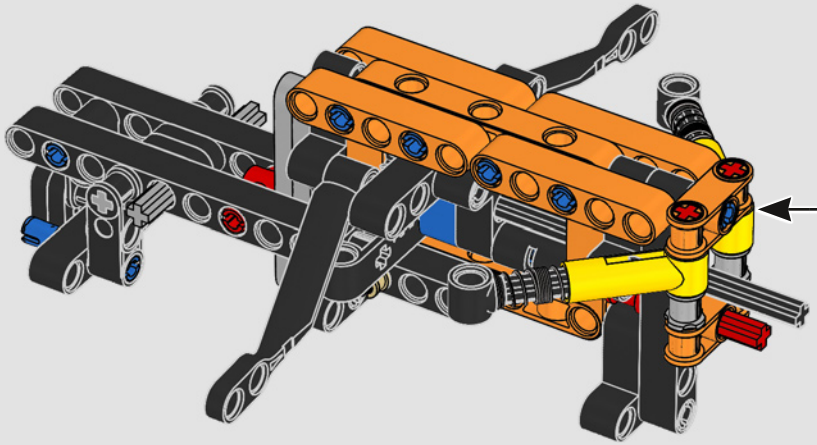

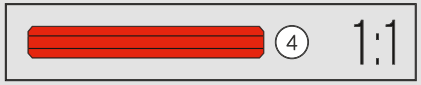

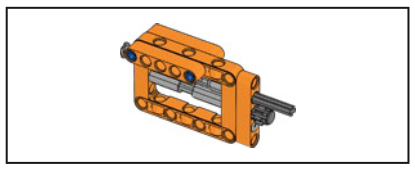

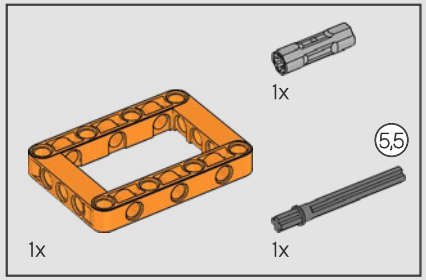

83

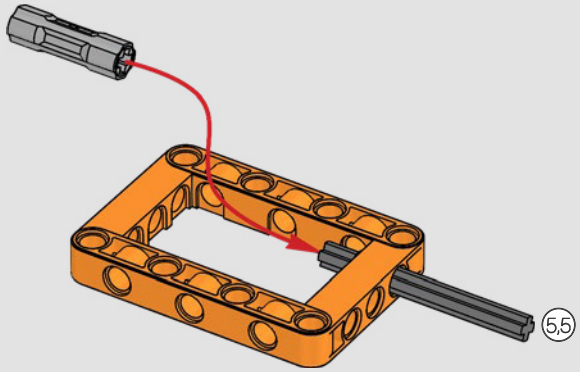

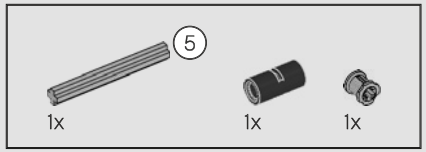

84

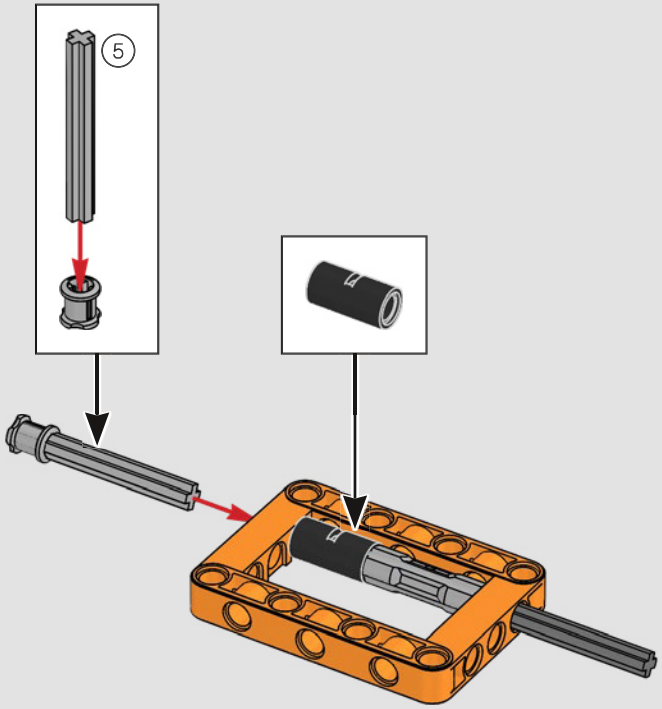

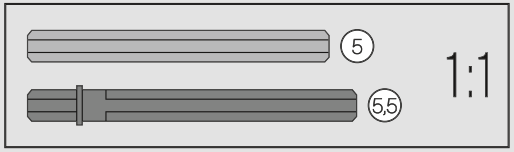

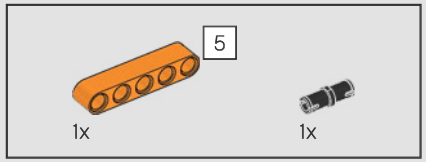

85

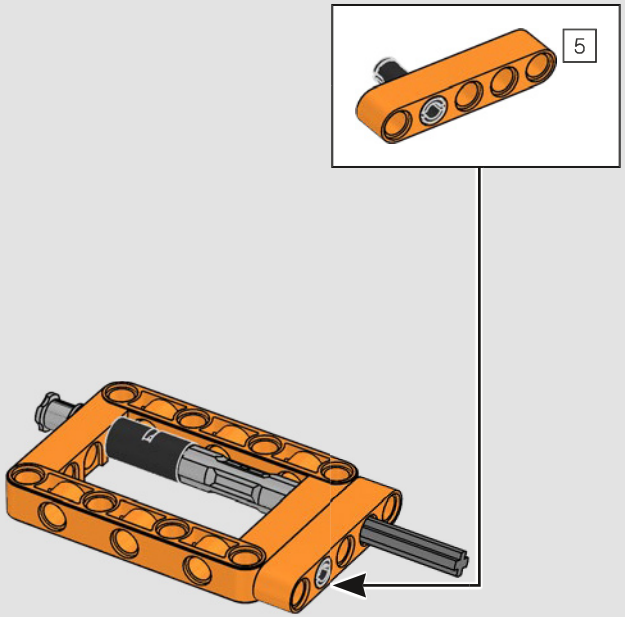

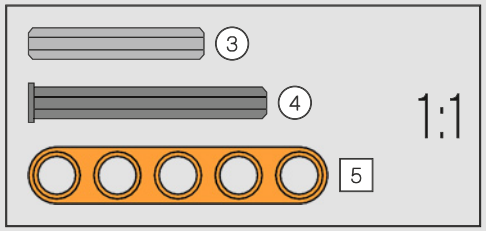

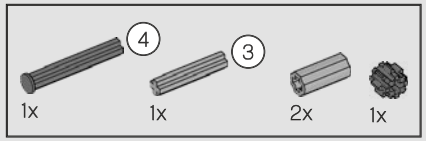

86

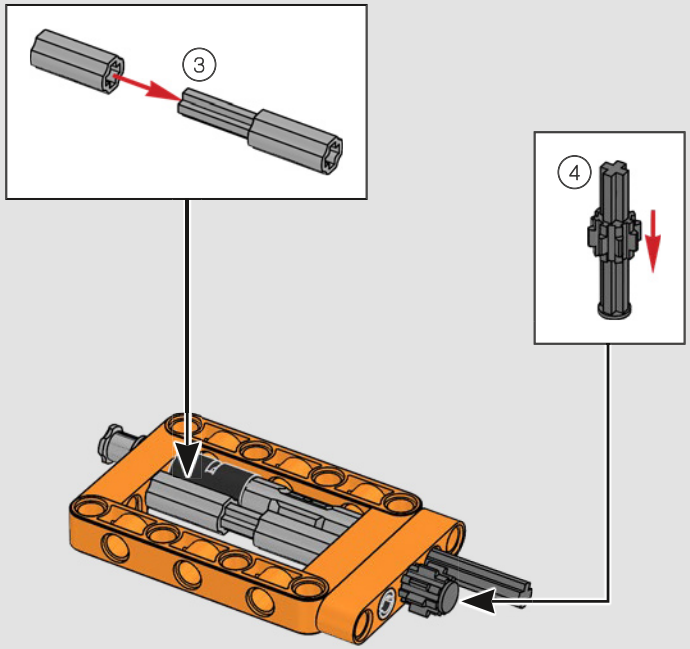

87

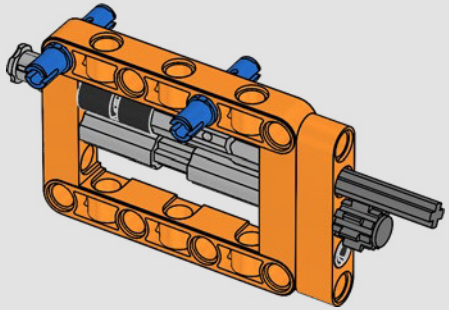

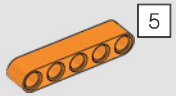

88

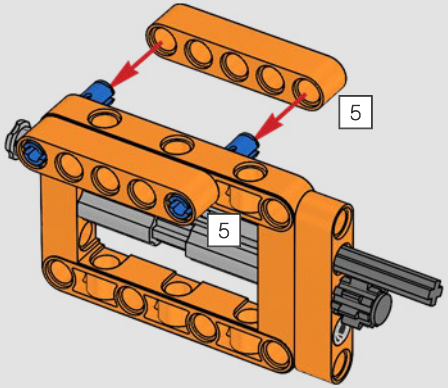

89

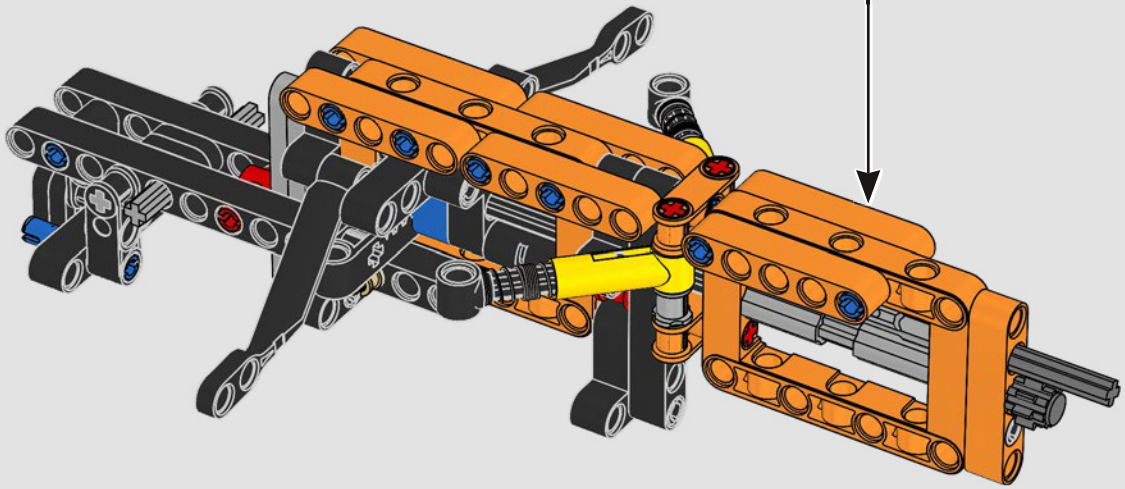

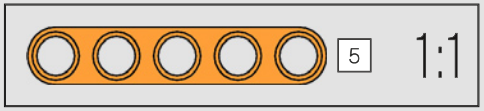

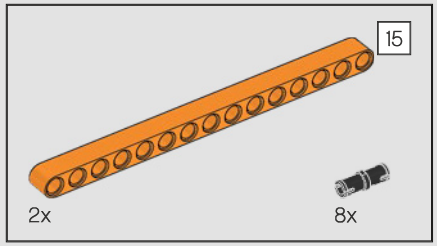

90

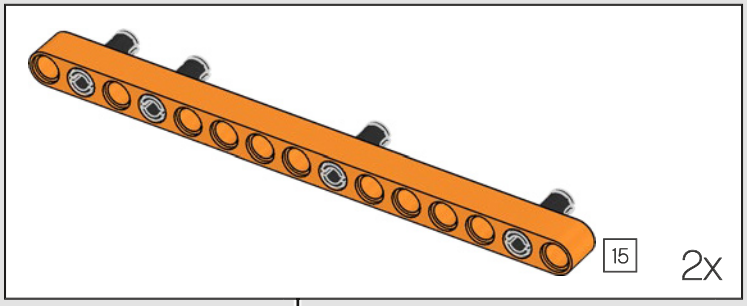

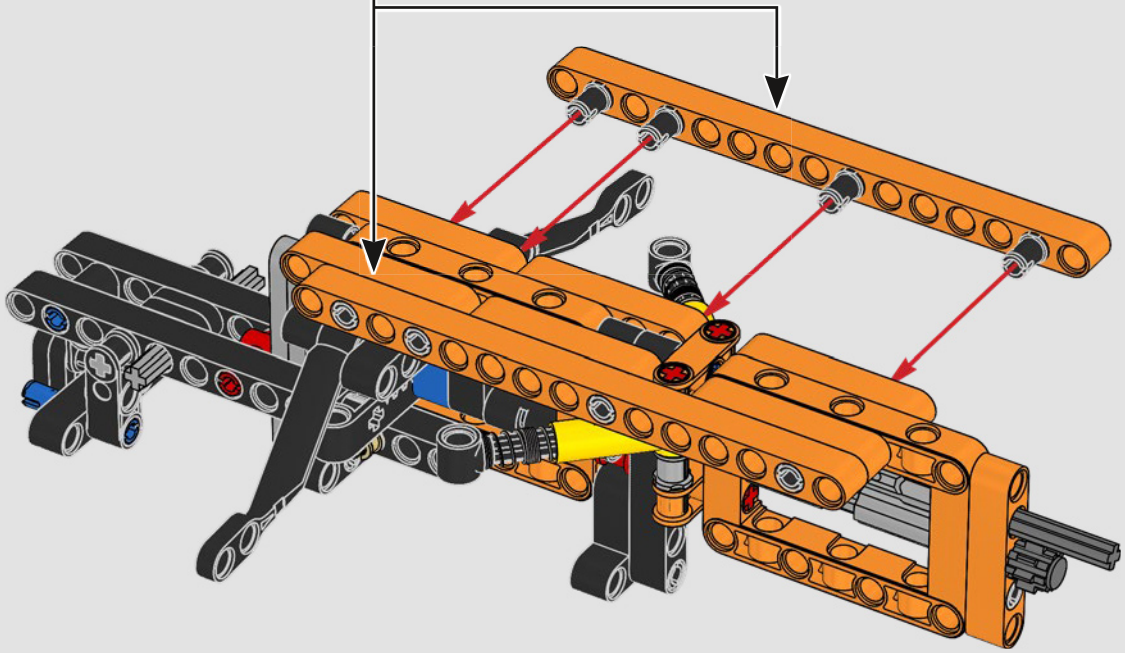

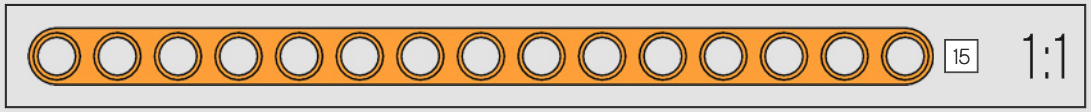

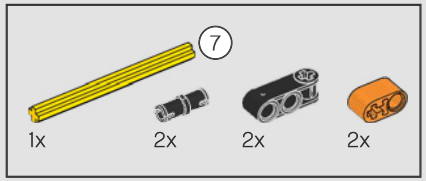

91

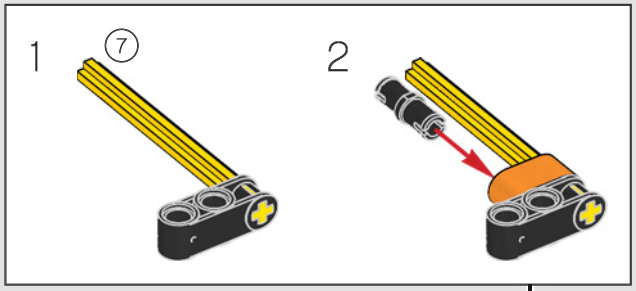

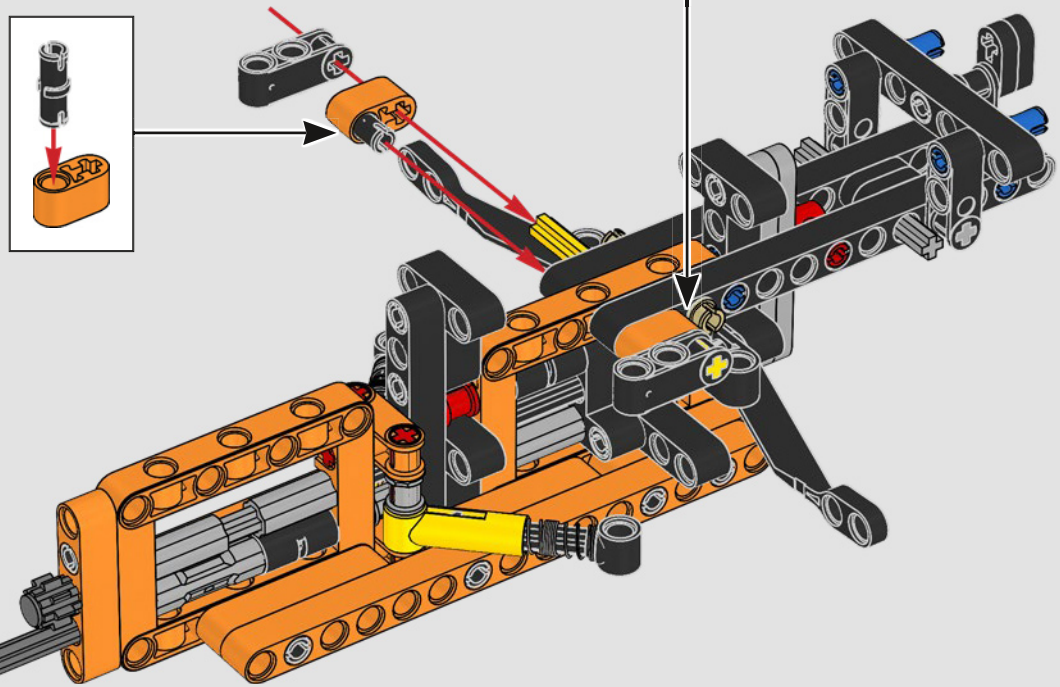

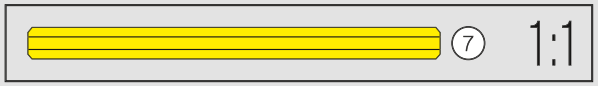

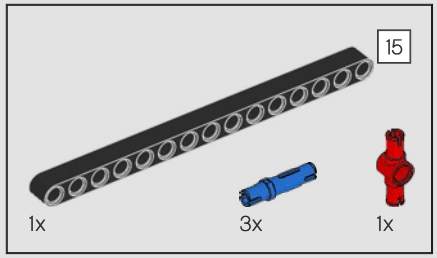

92

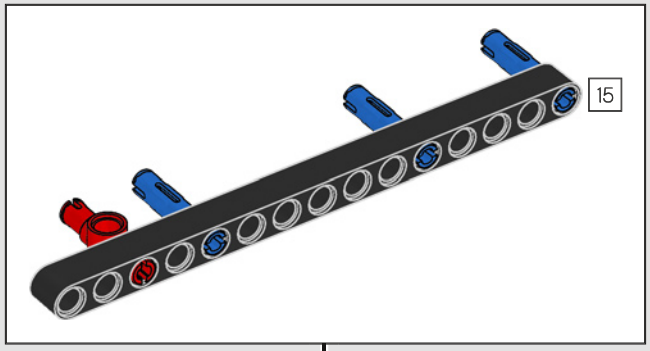

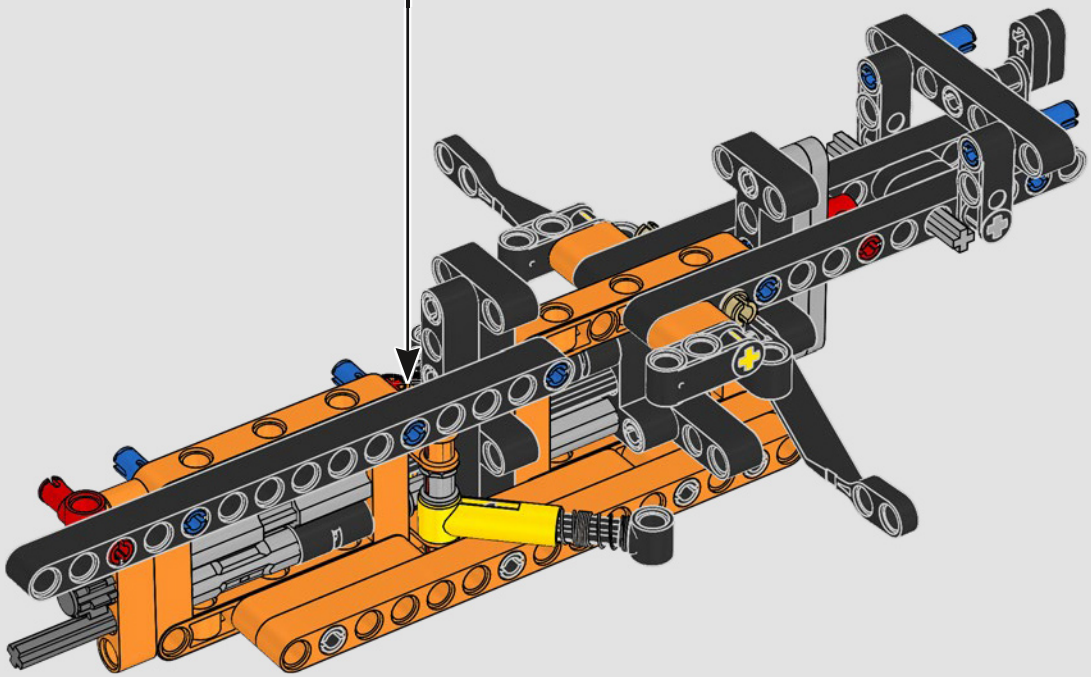

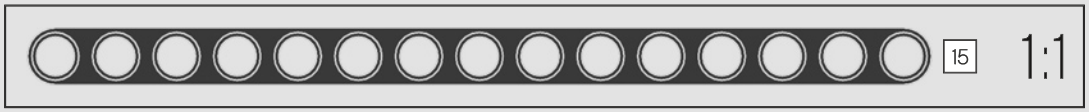

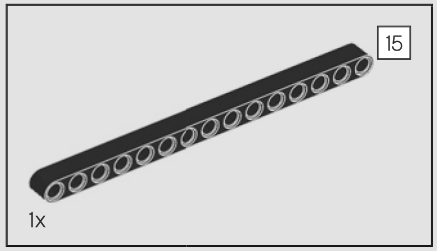

93

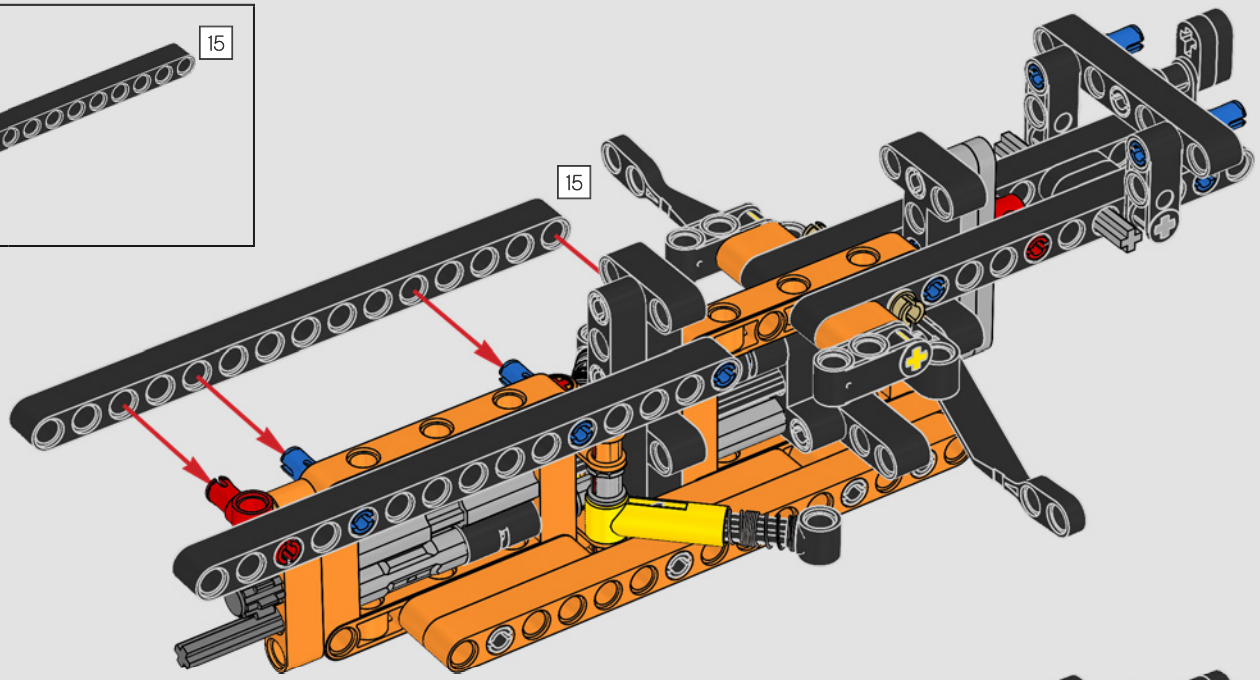

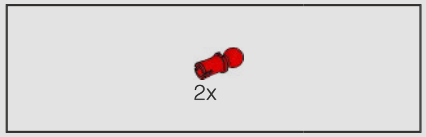

94

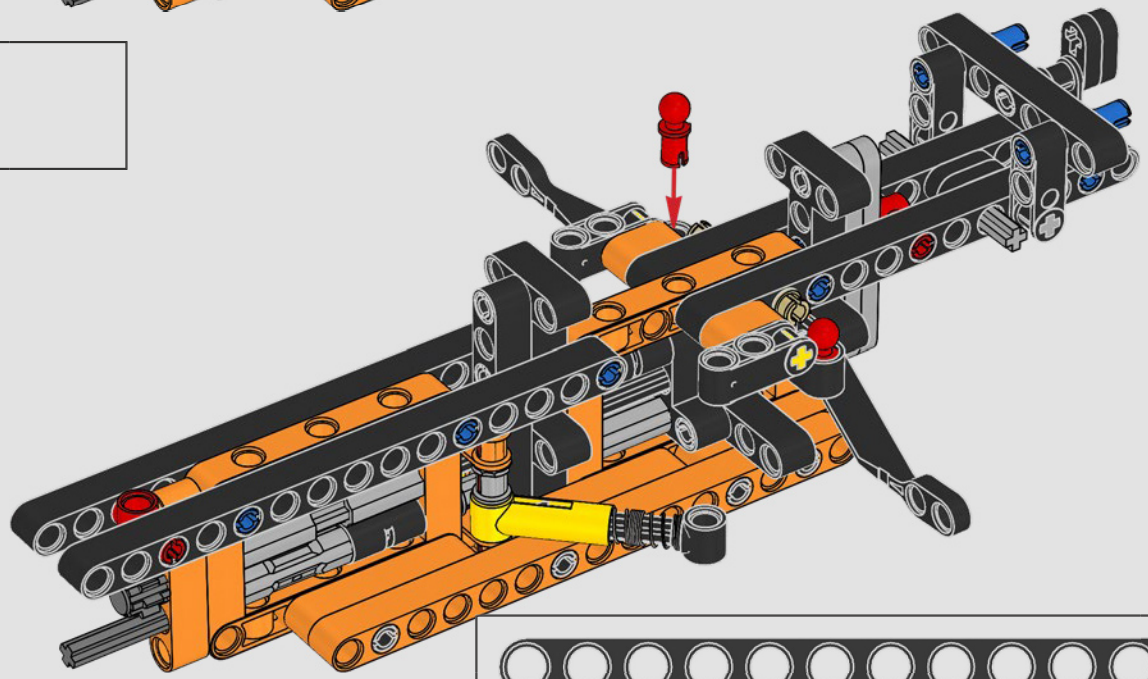

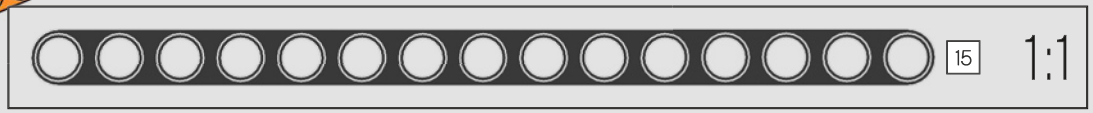

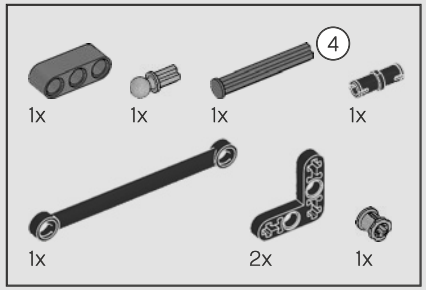

95

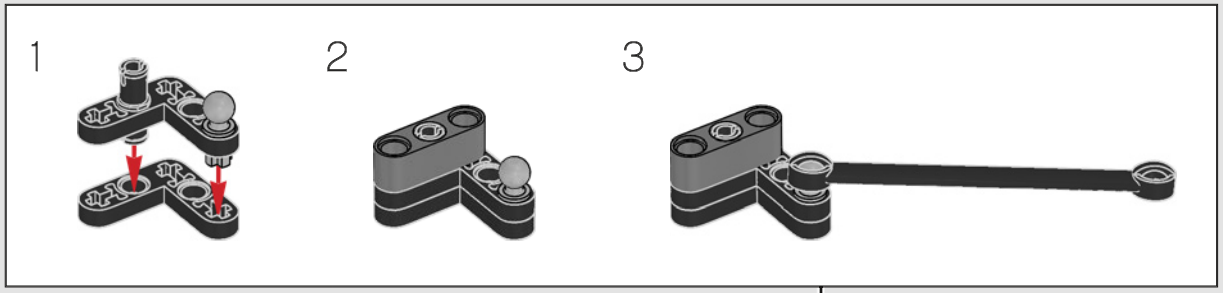

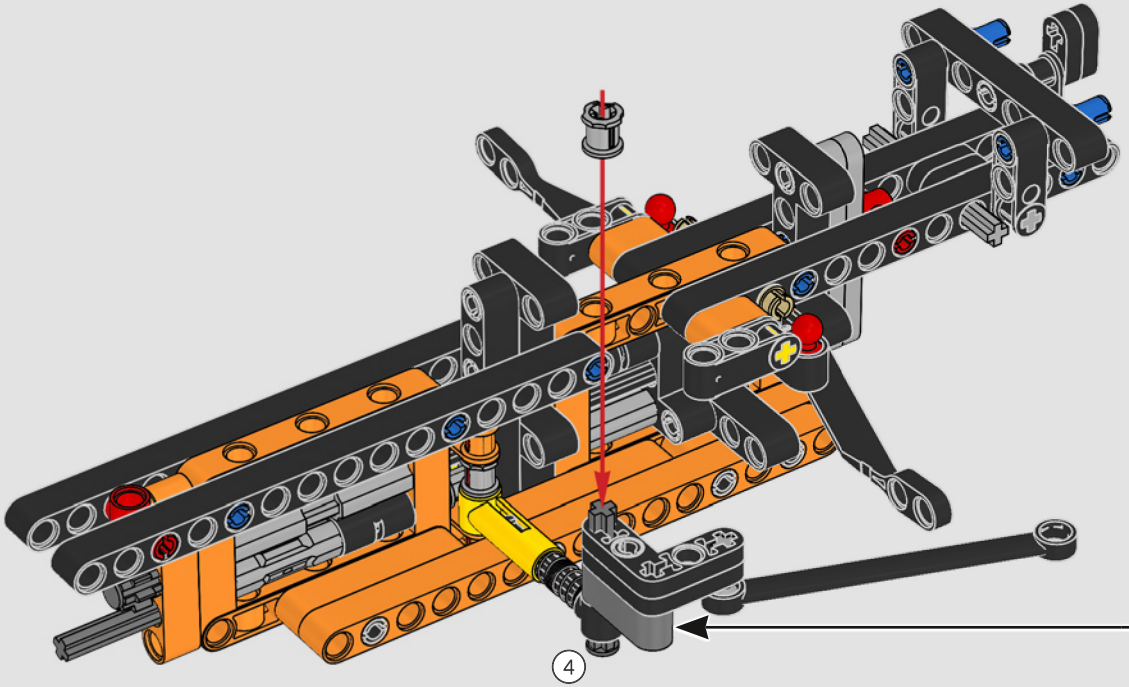

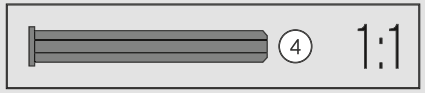

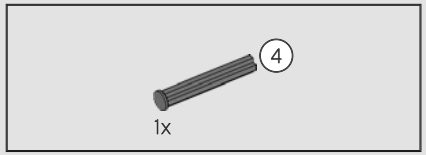

96

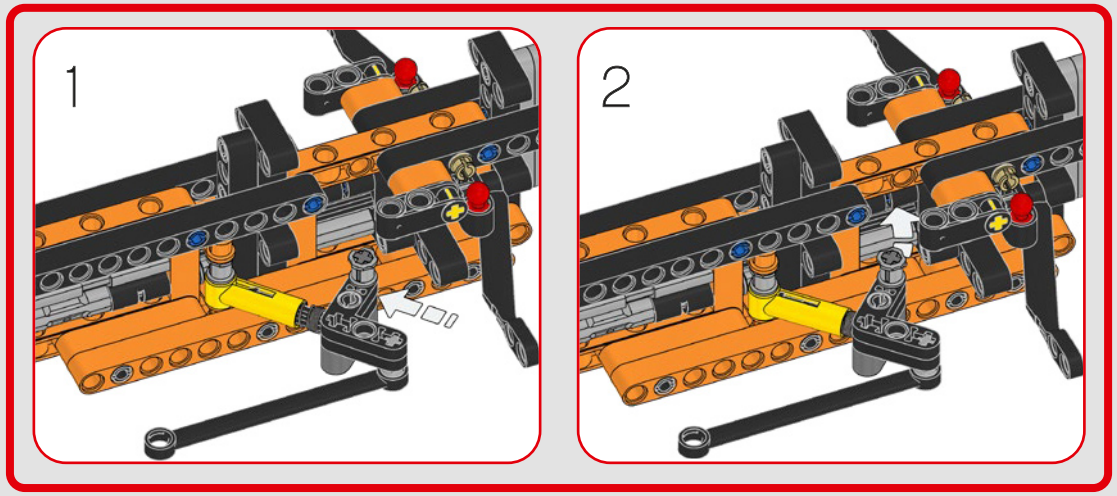

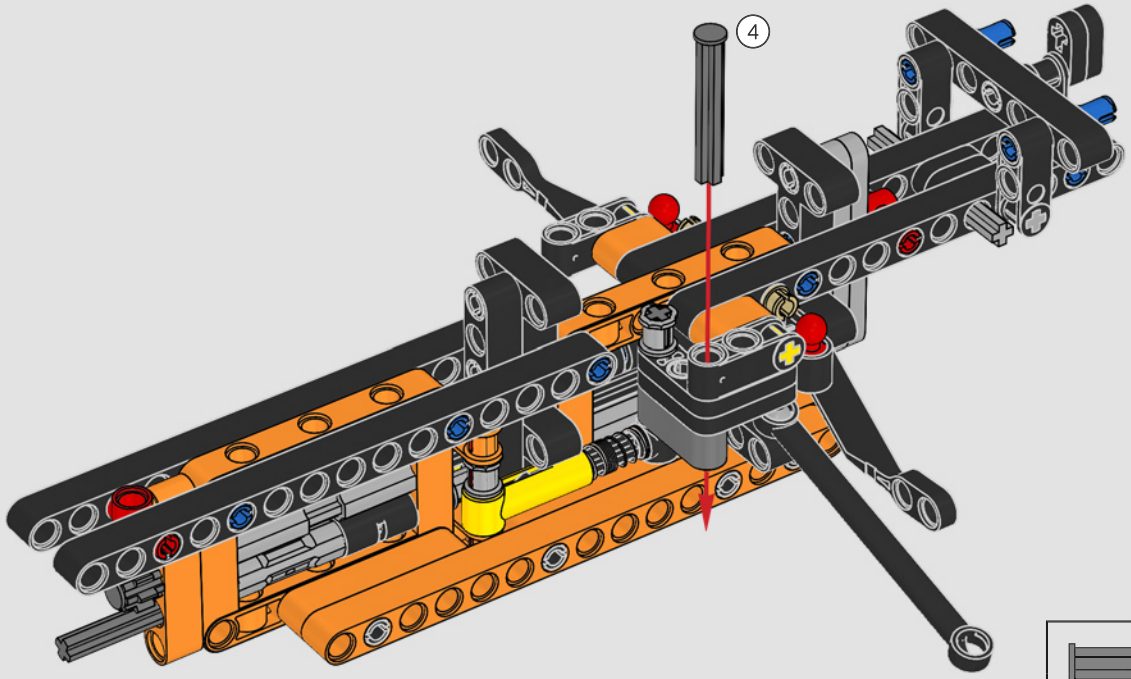

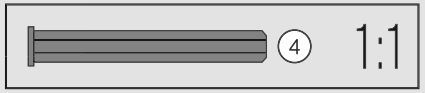

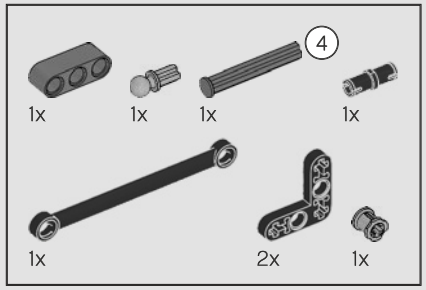

97

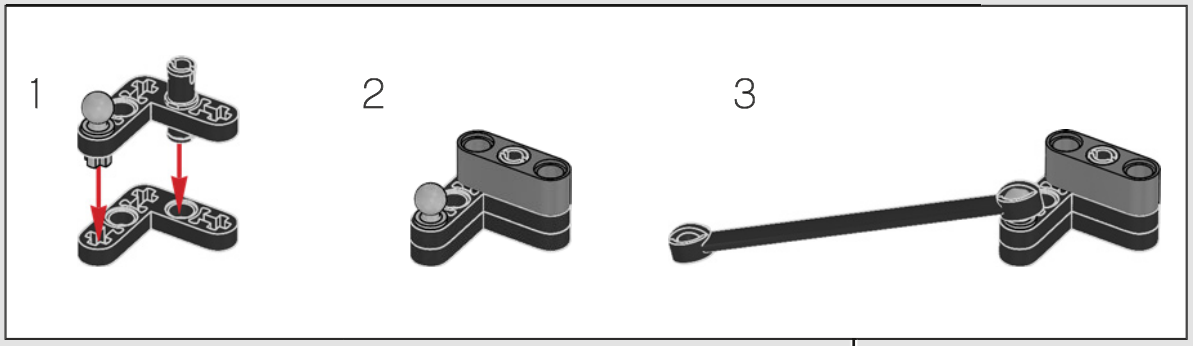

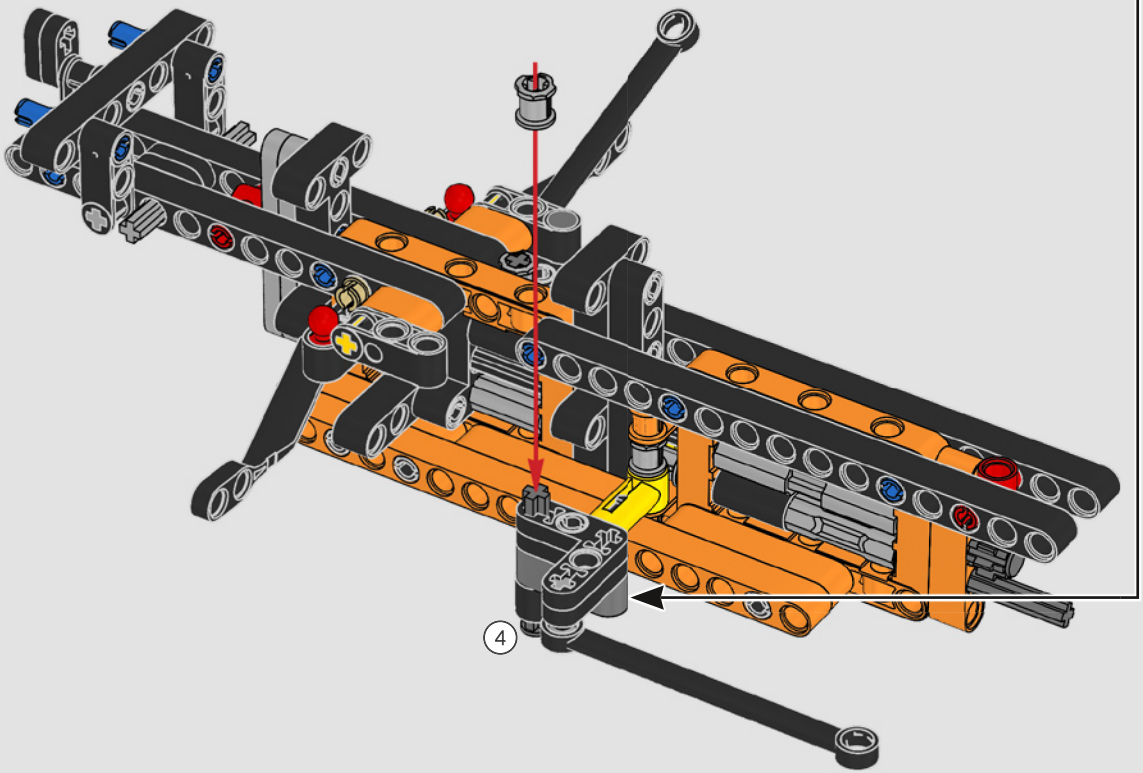

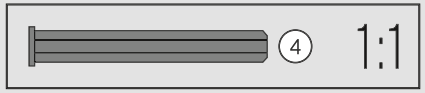

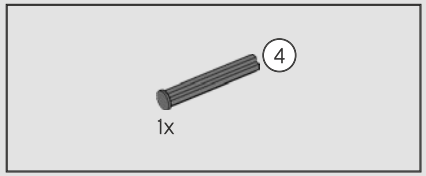

98

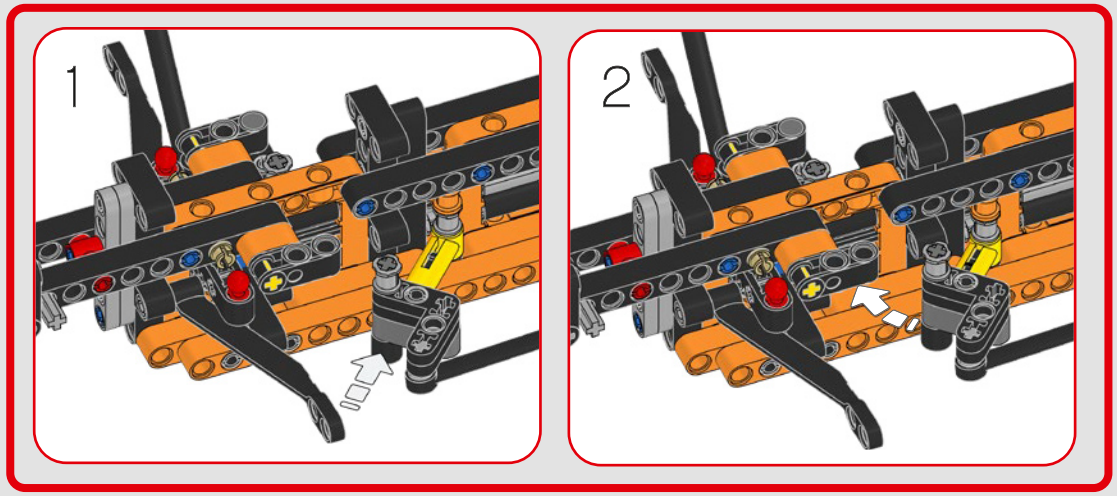

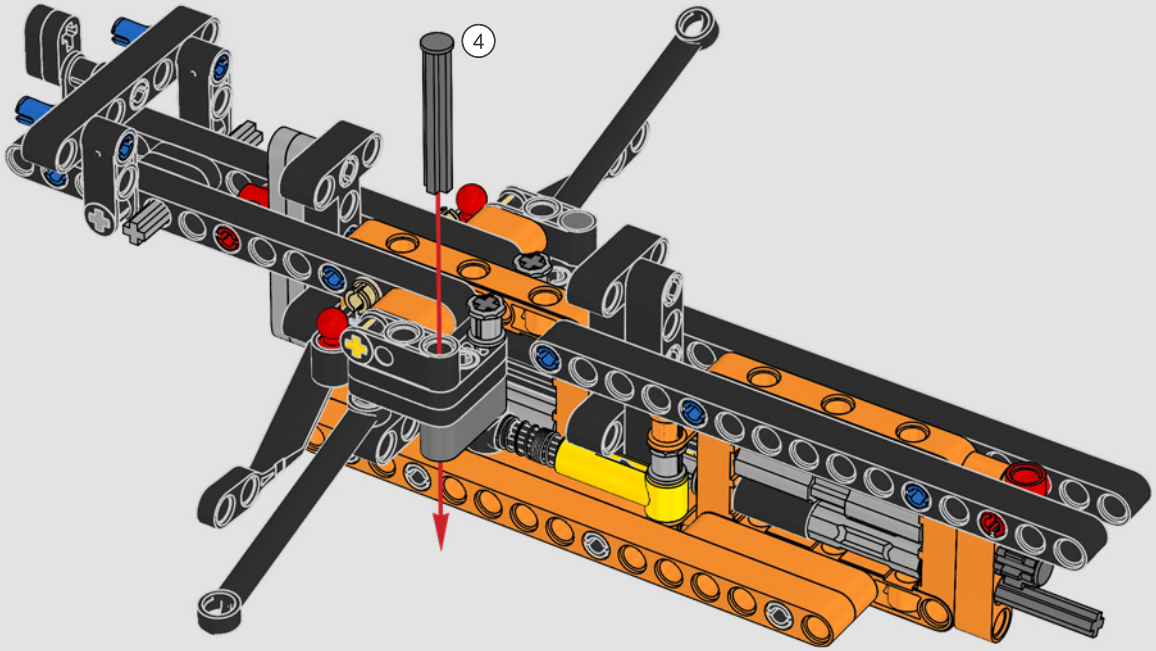

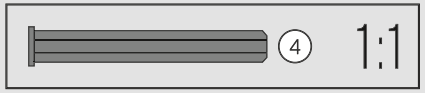

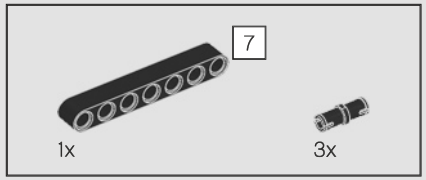

99

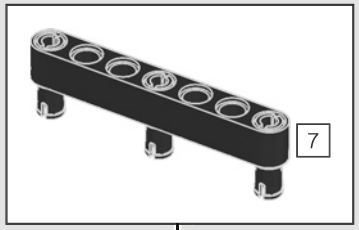

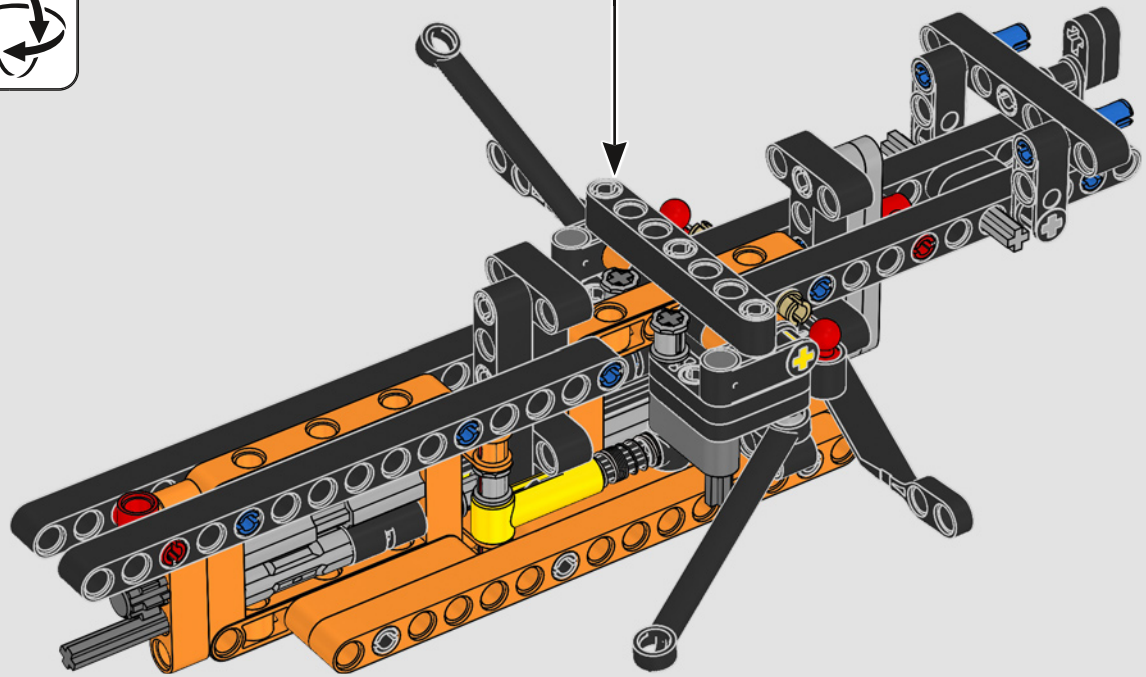

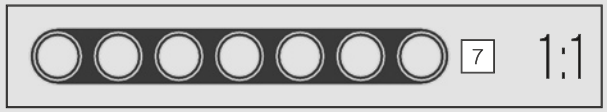

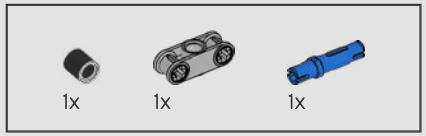

100

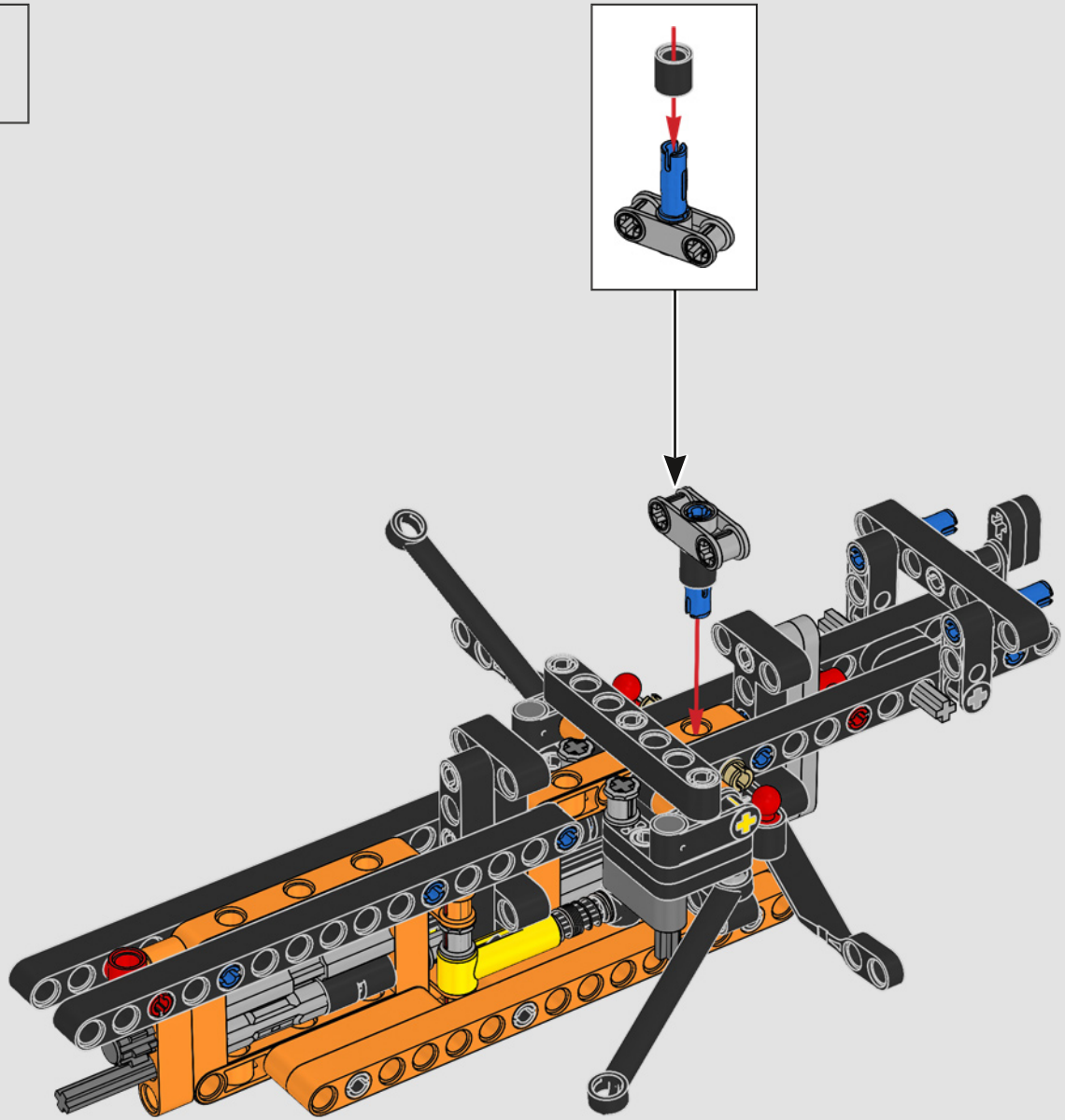

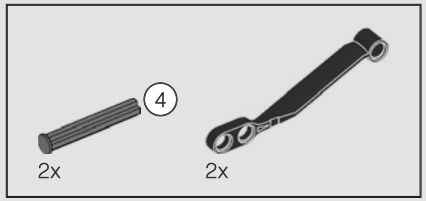

101

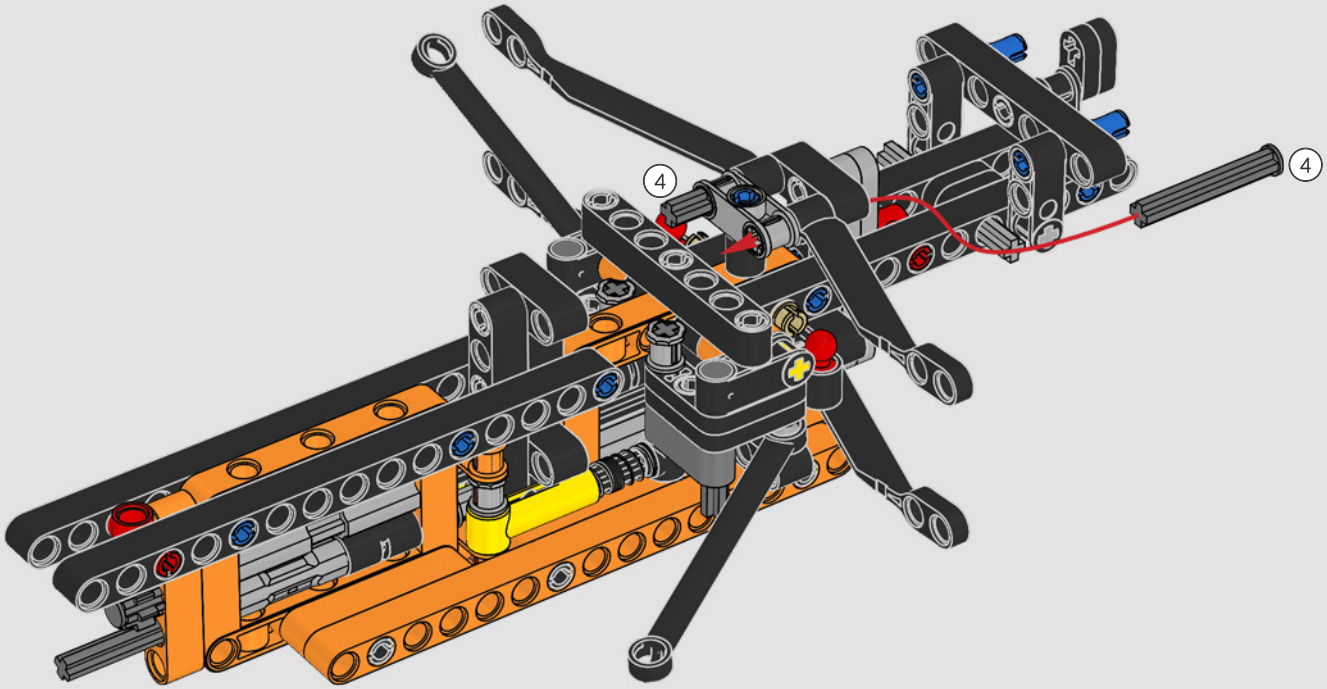

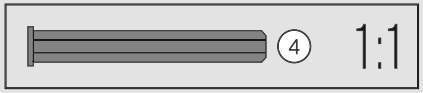

2x

102

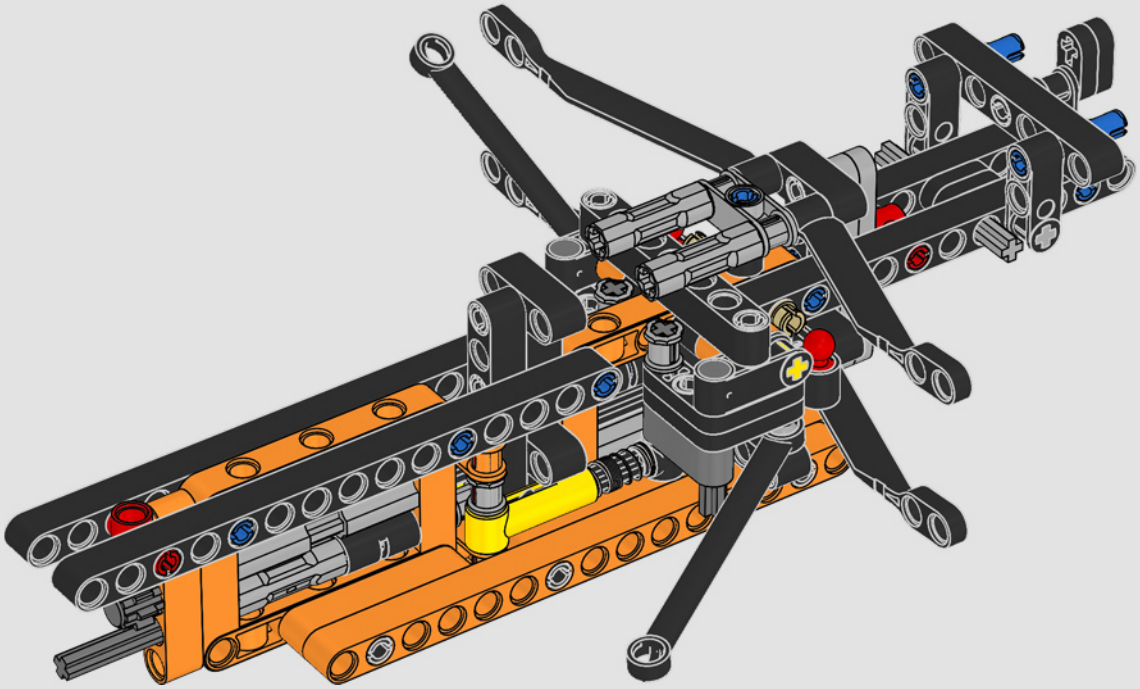

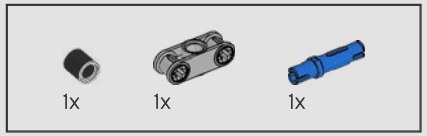

103

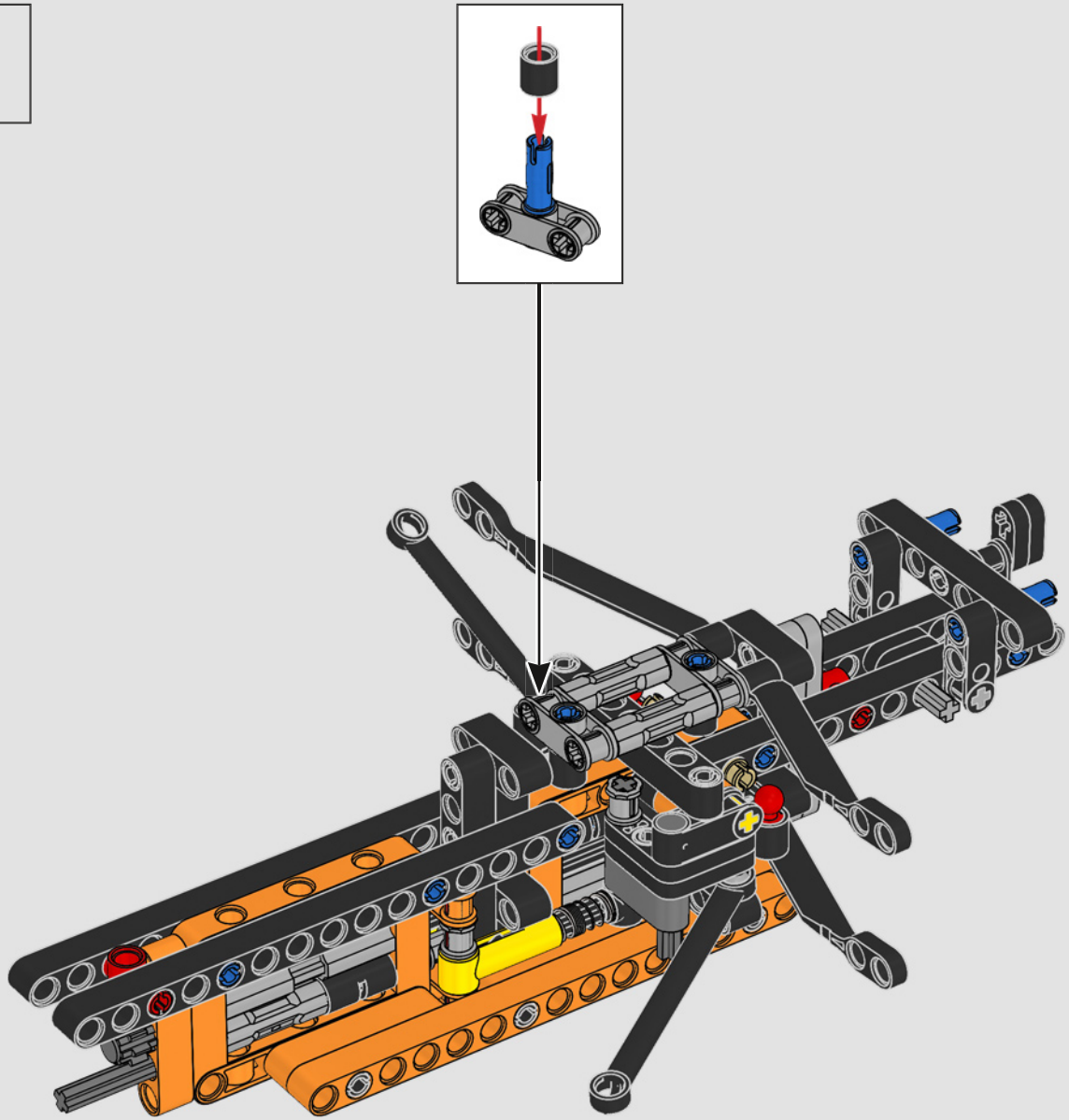

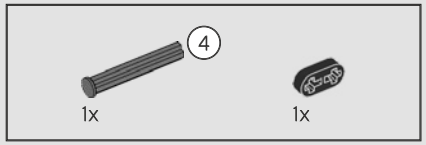

104

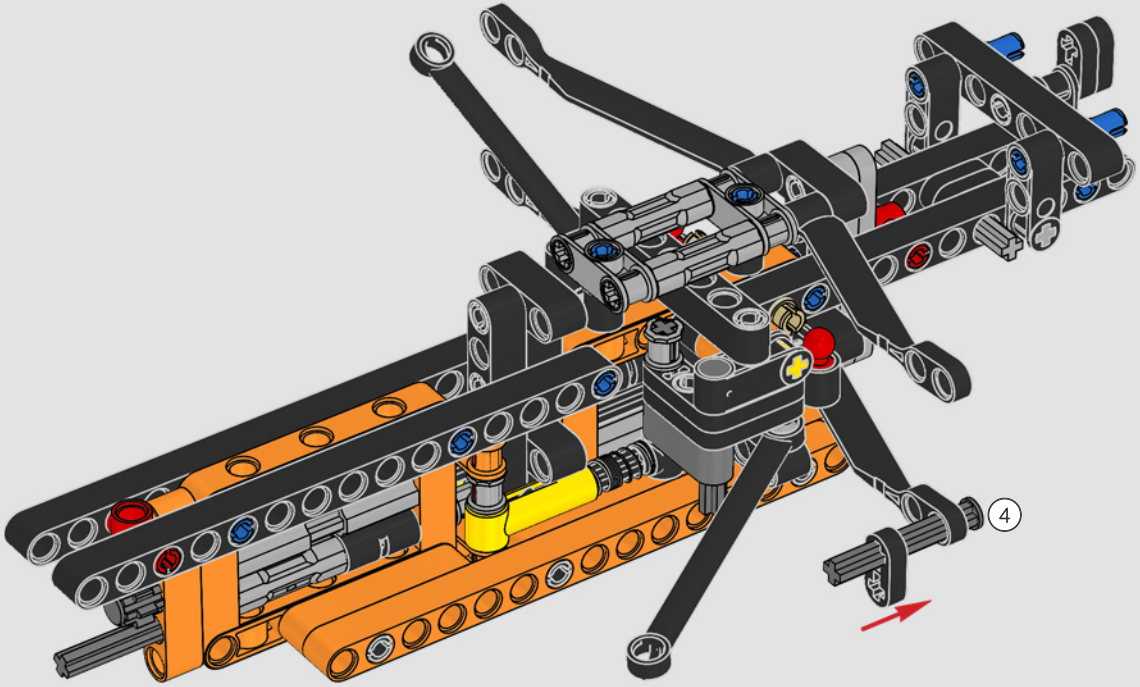

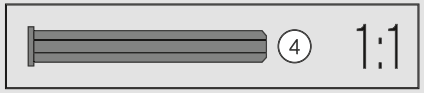

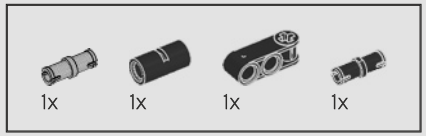

105

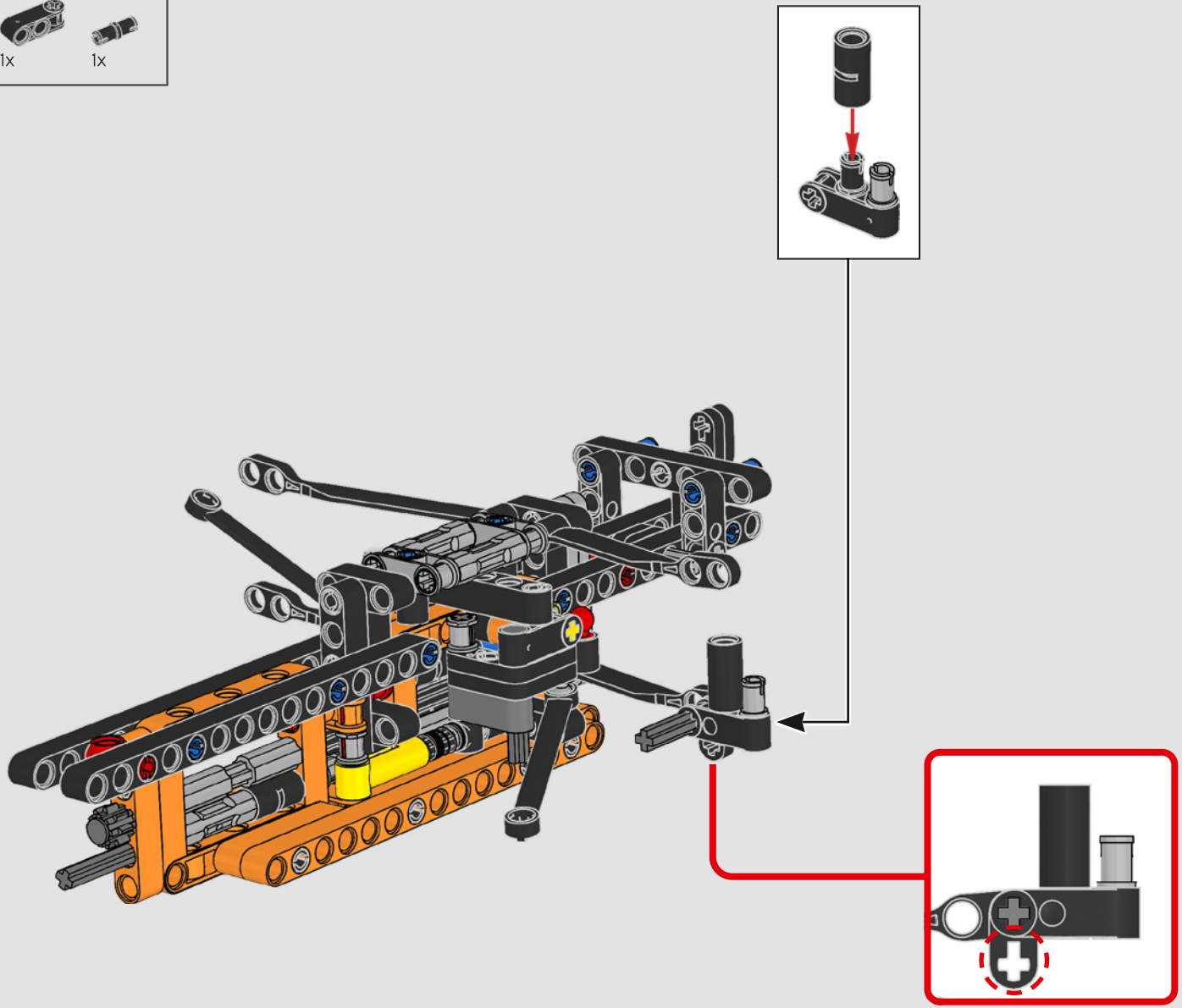

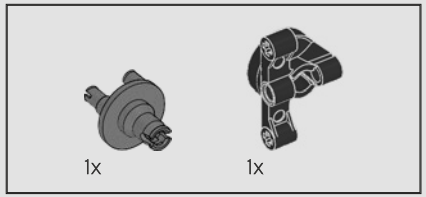

106

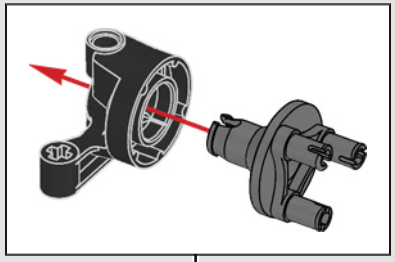

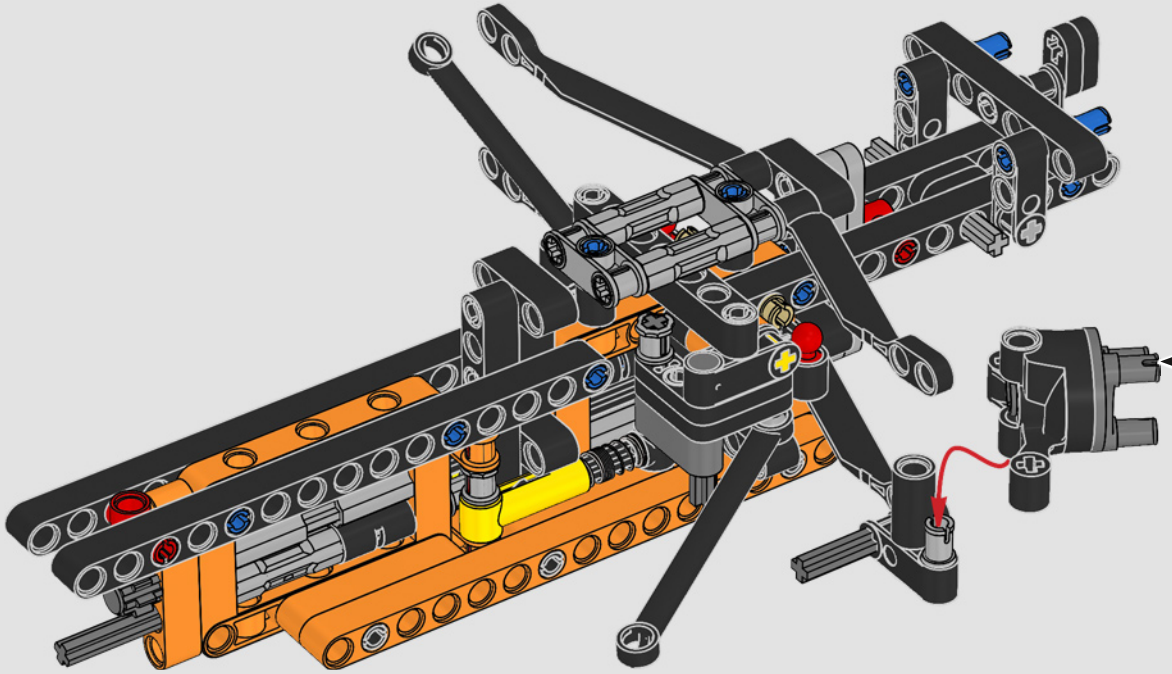

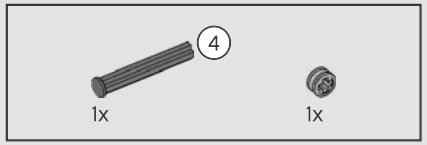

107

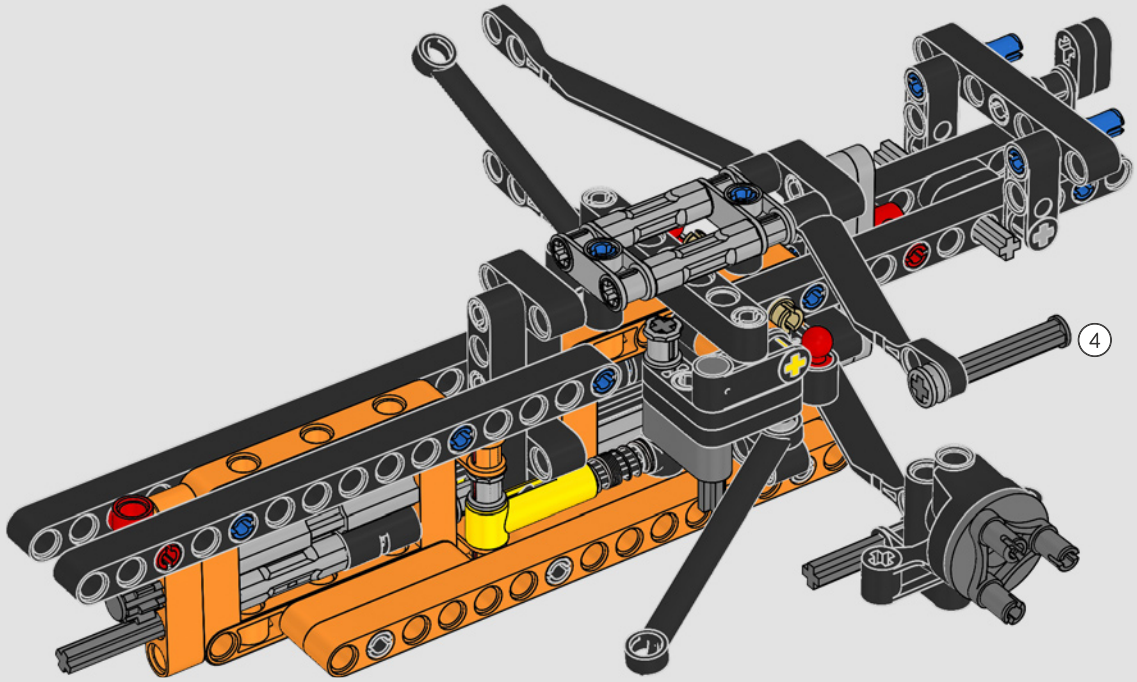

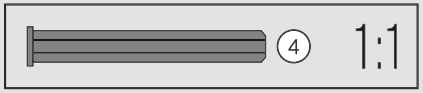

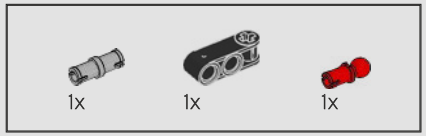

108

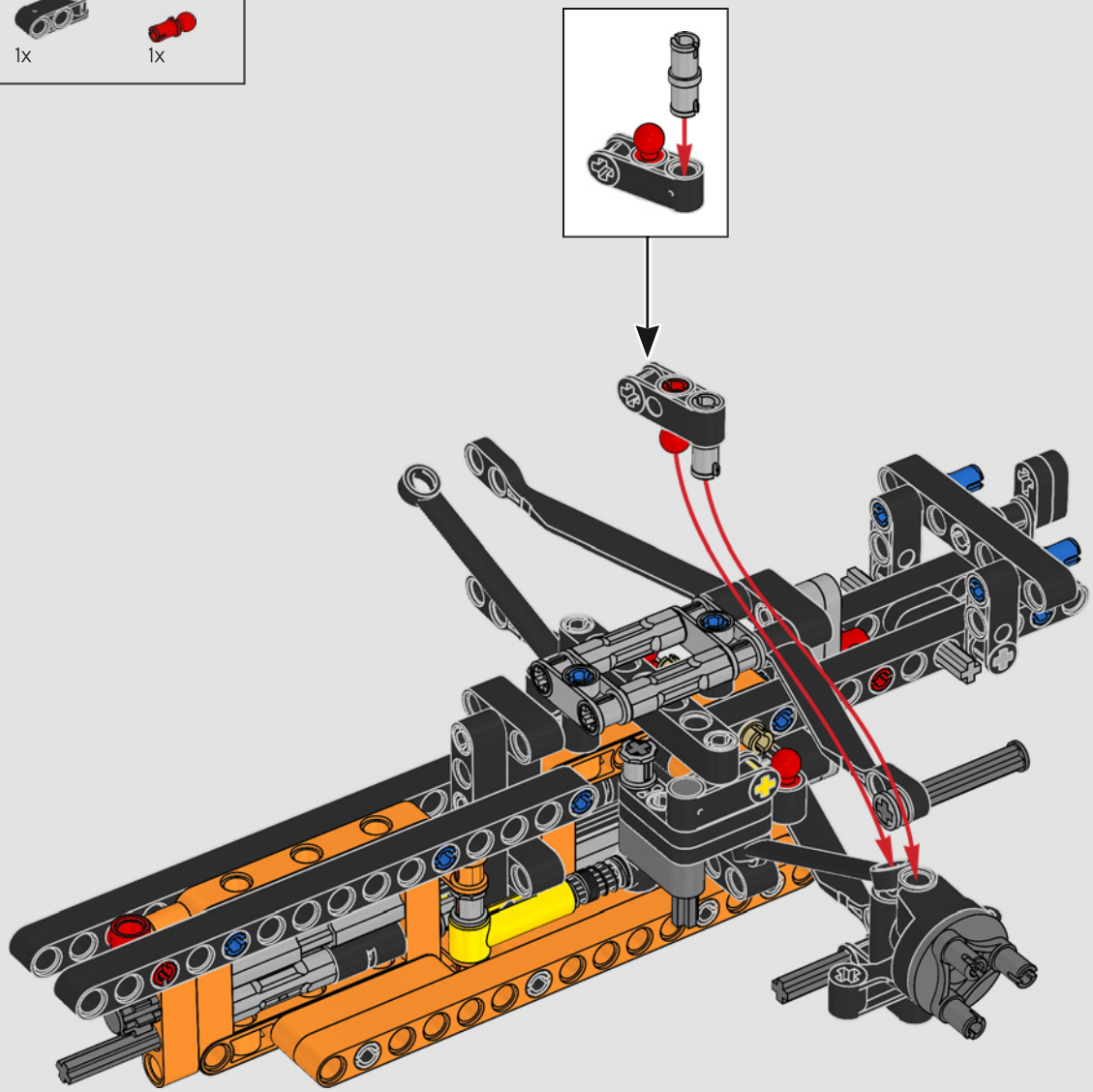

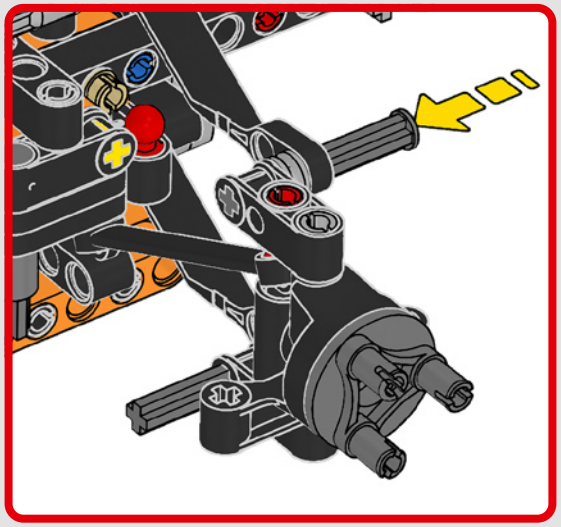

1x

109

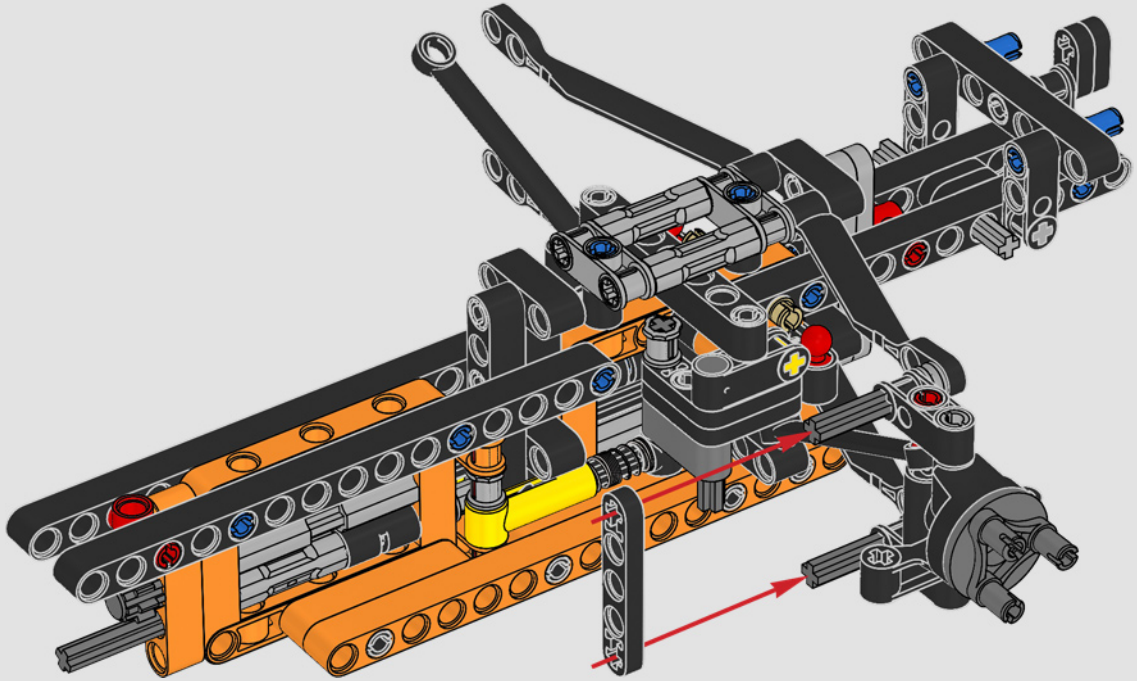

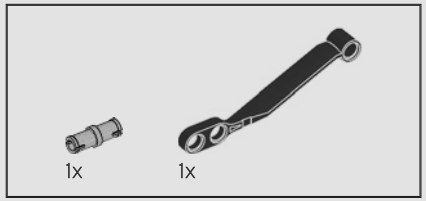

110

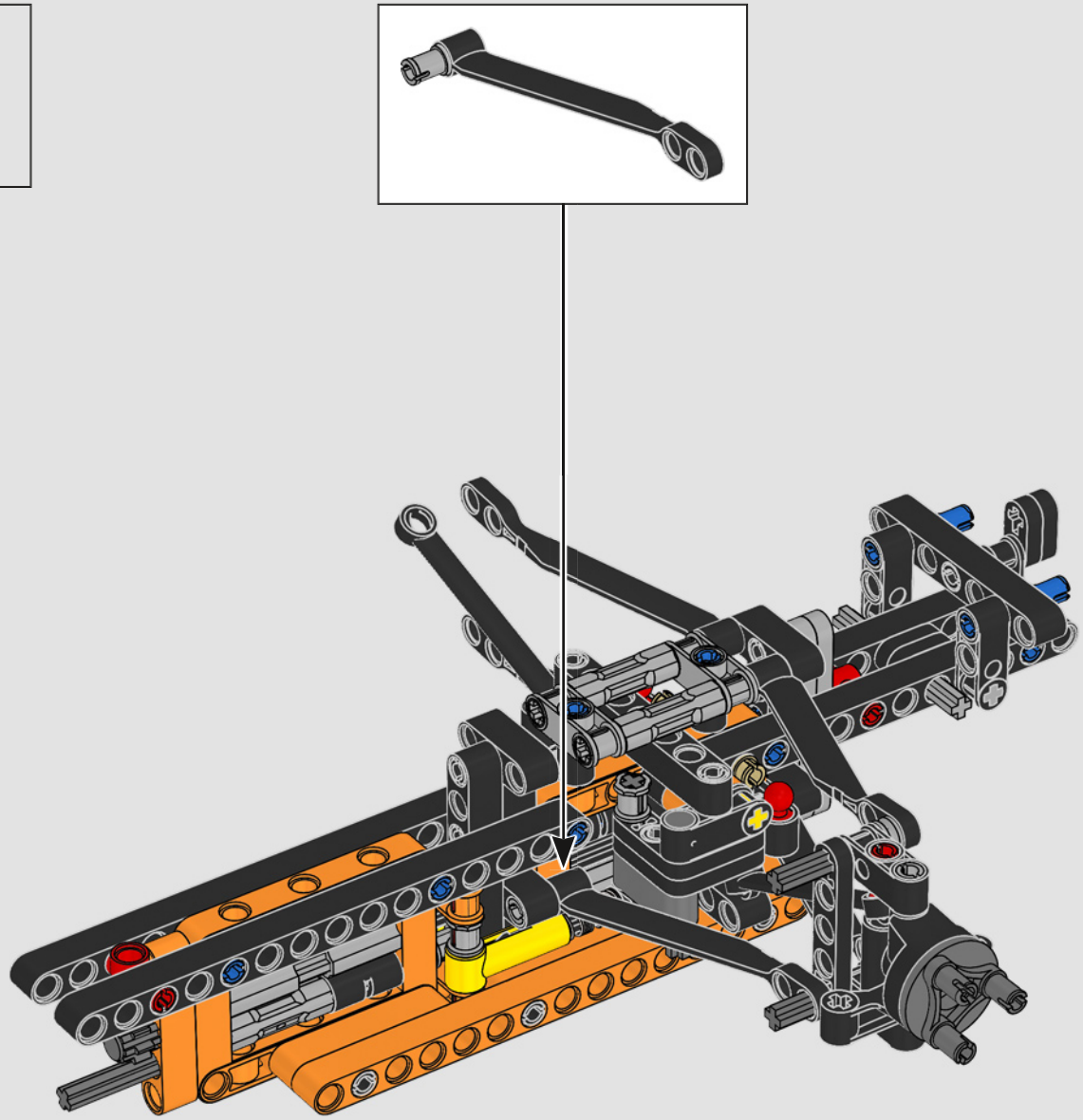

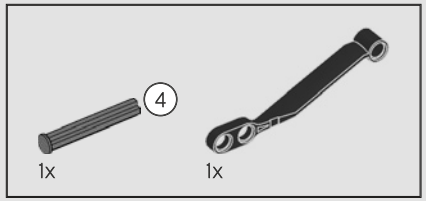

111

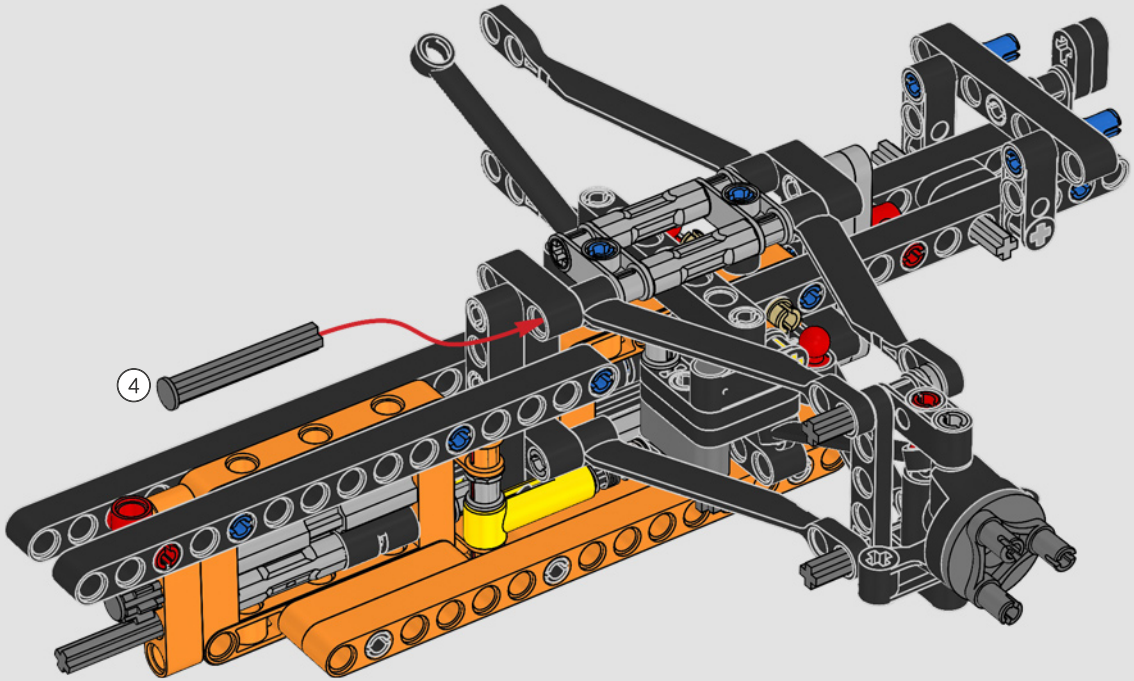

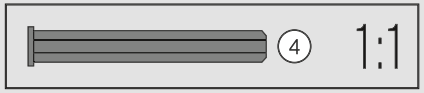

112

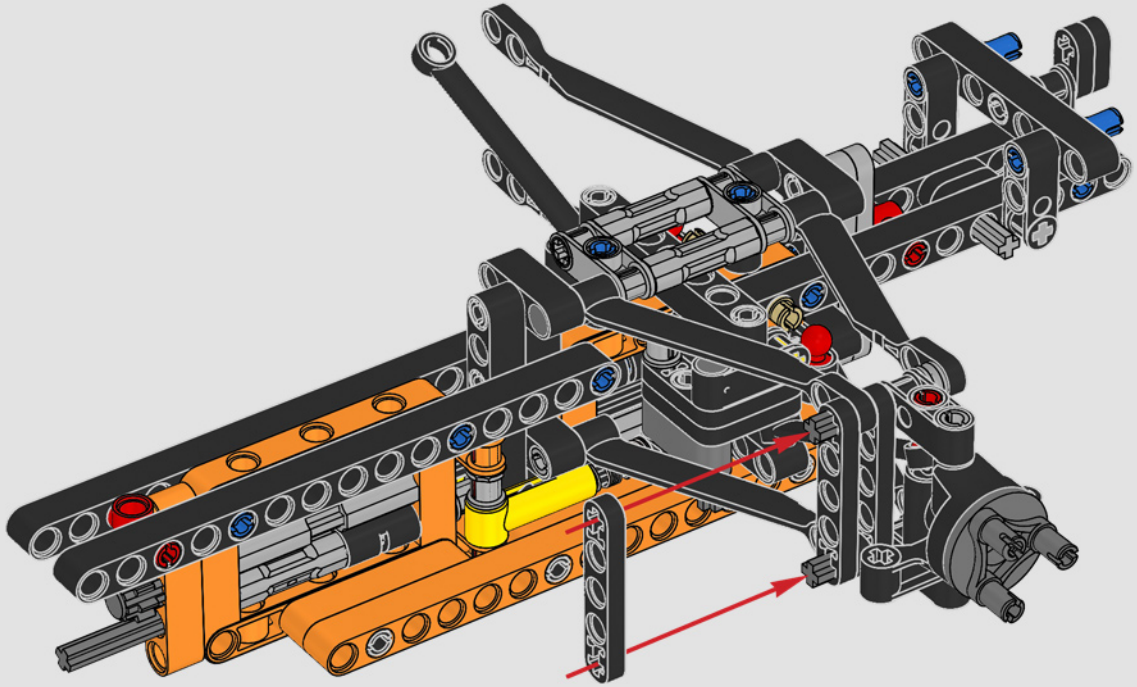

113

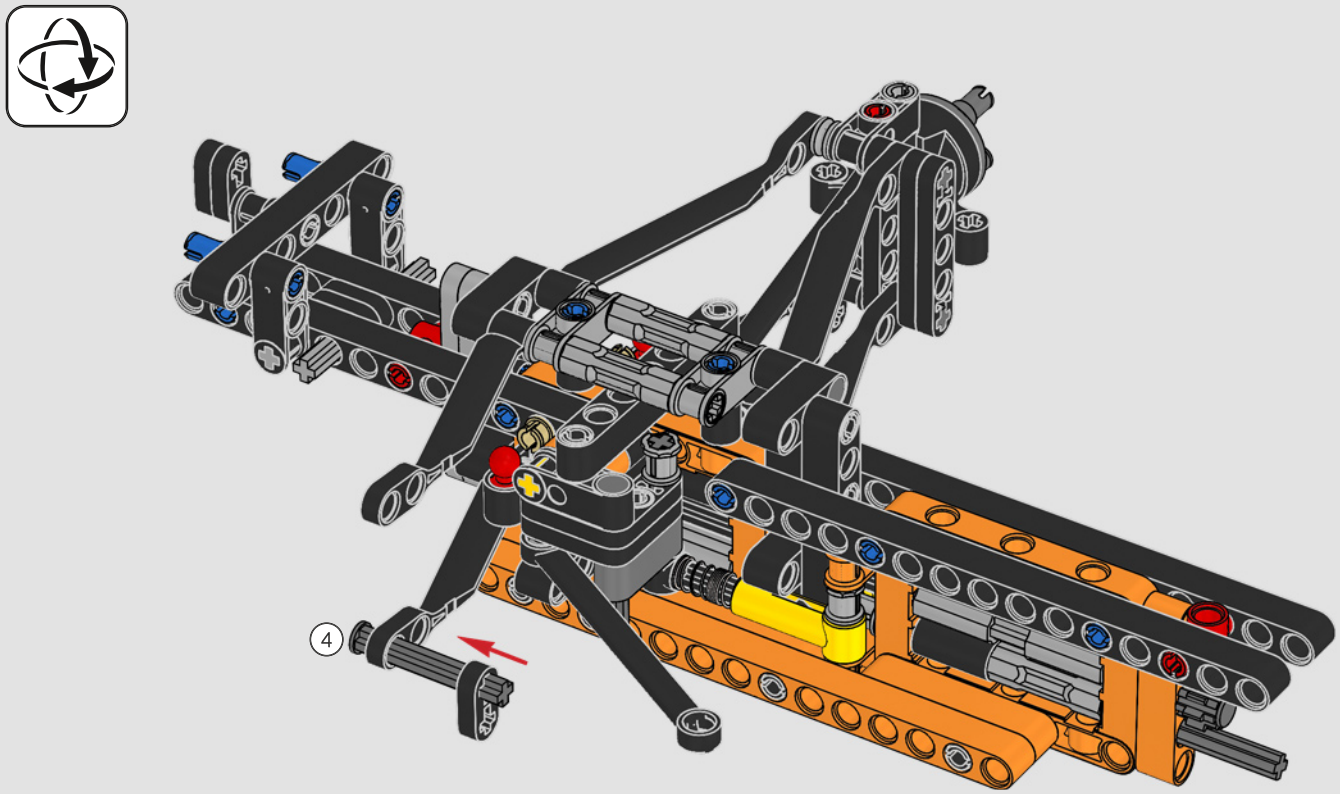

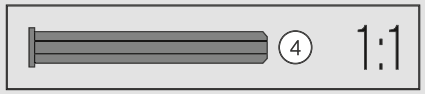

114

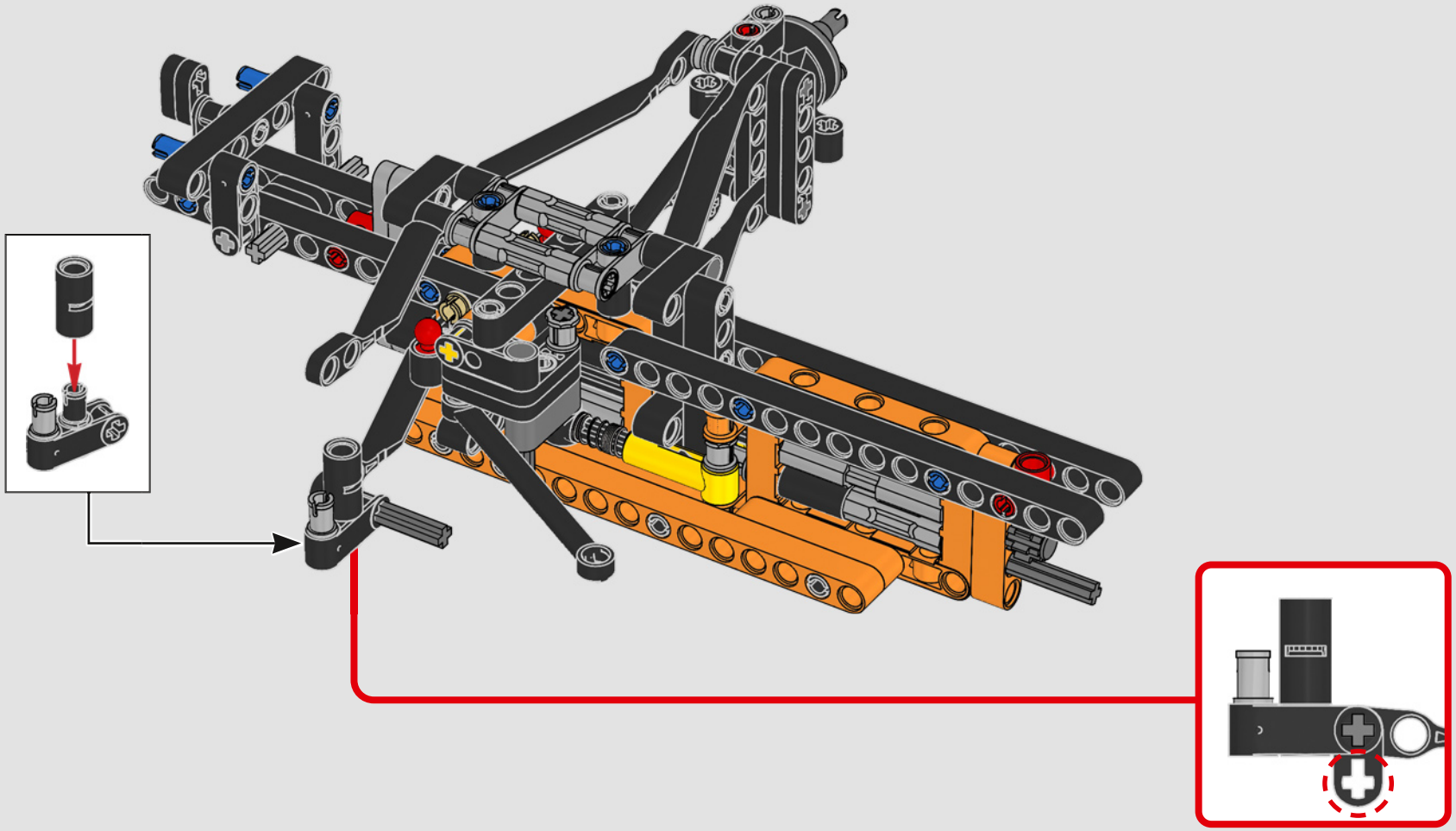

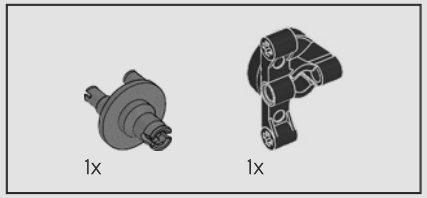

115

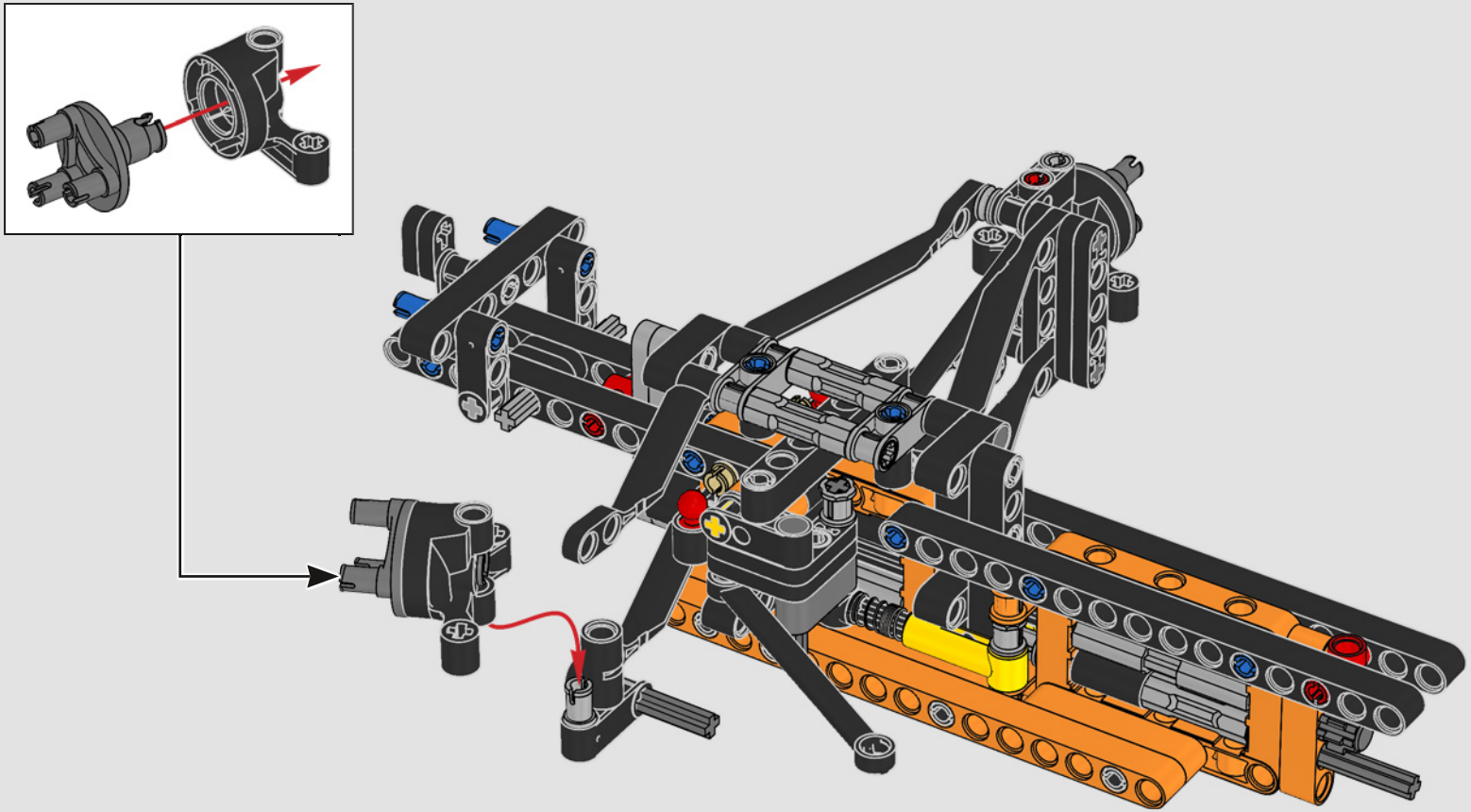

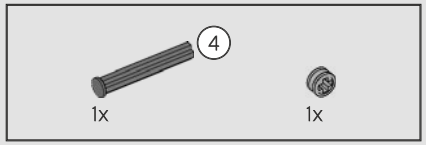

116

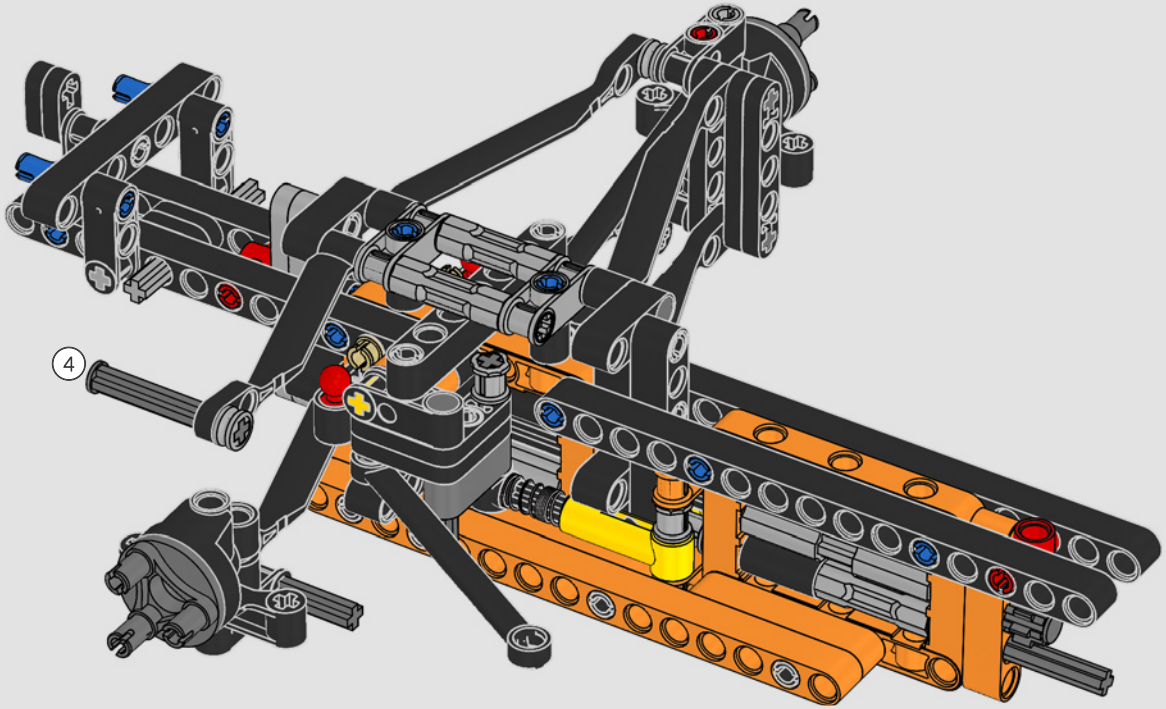

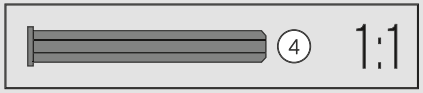

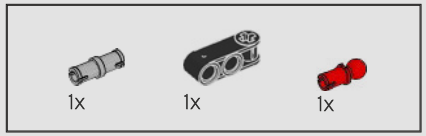

117

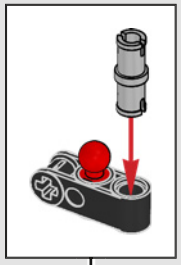

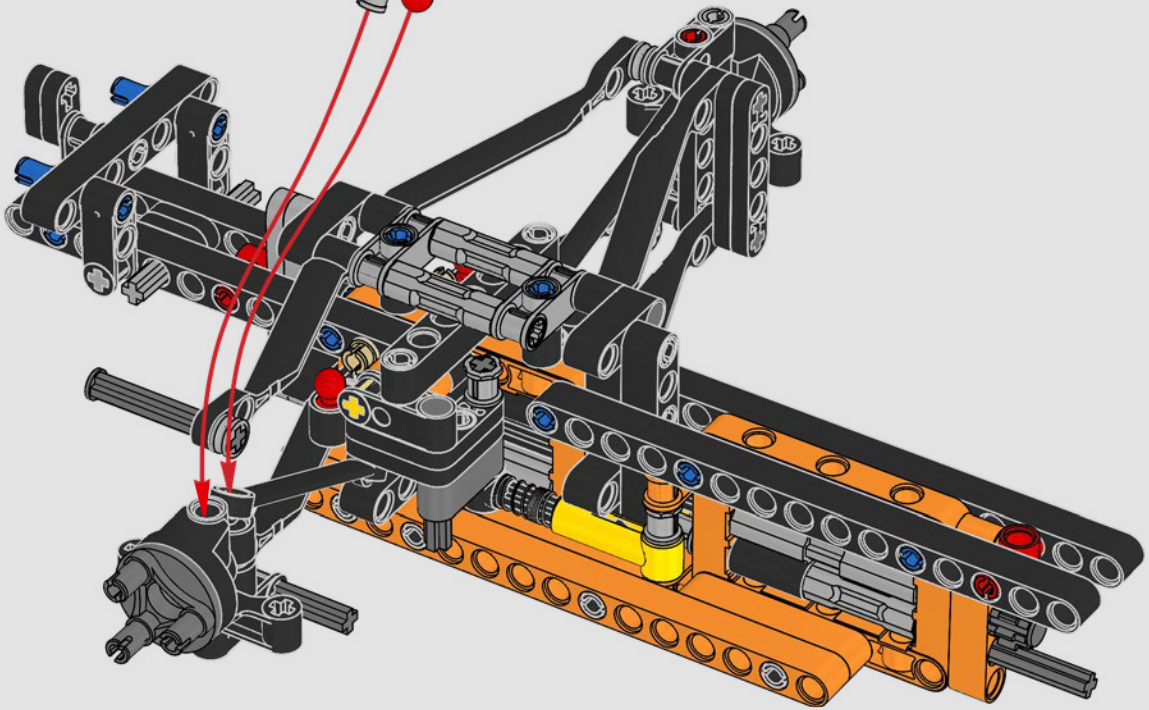

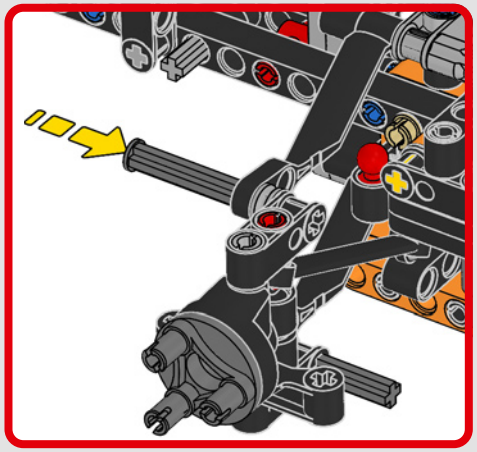

1x

118

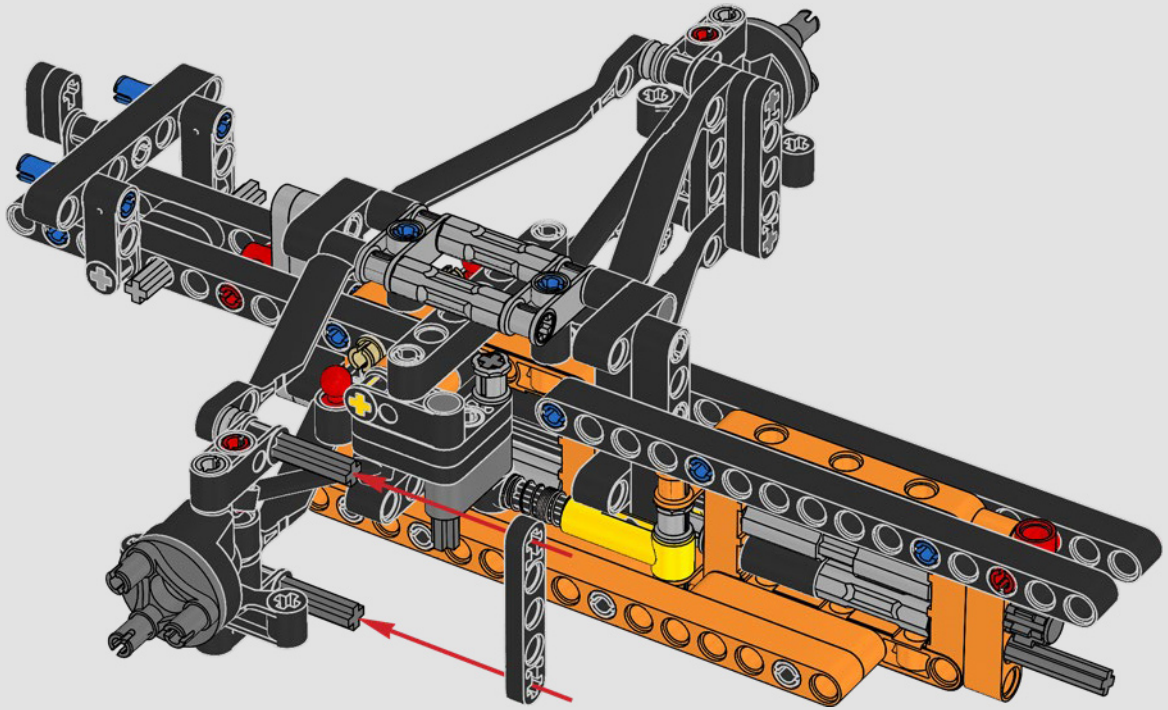

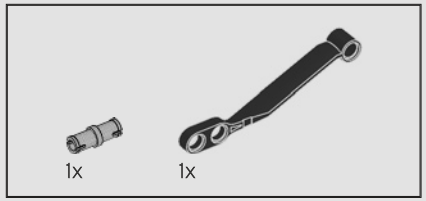

119

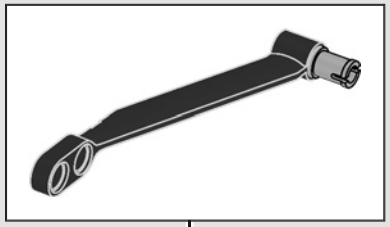

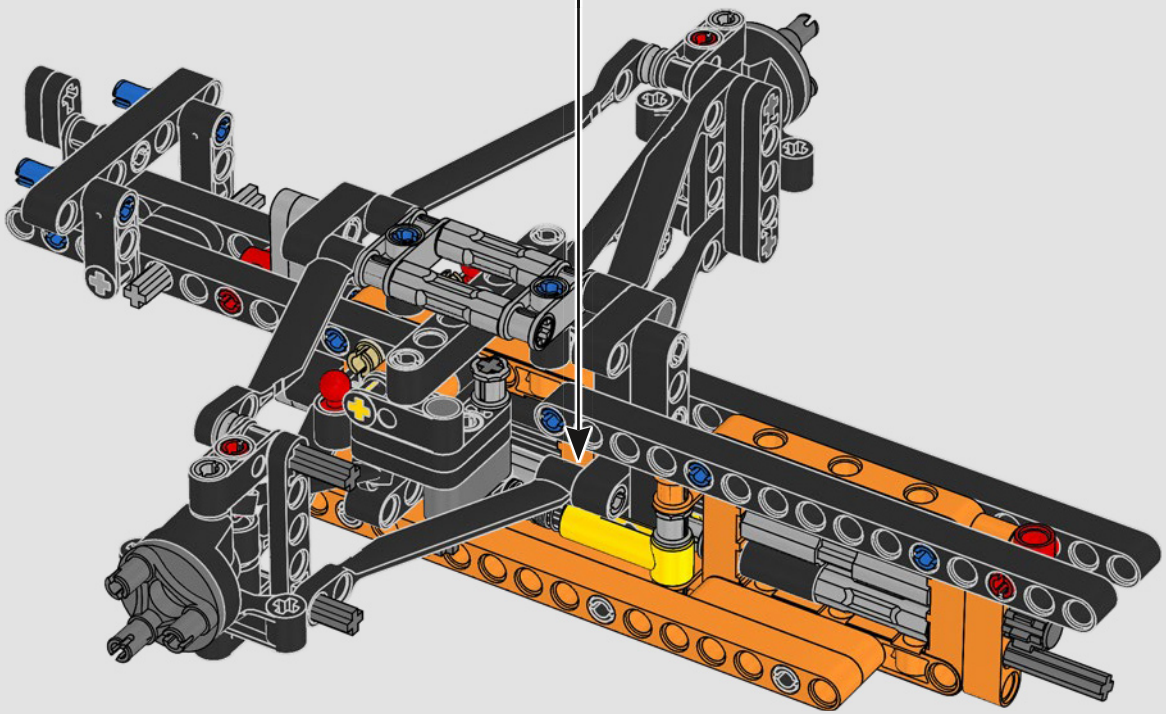

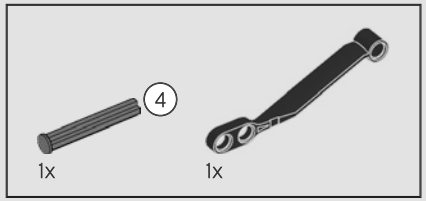

120

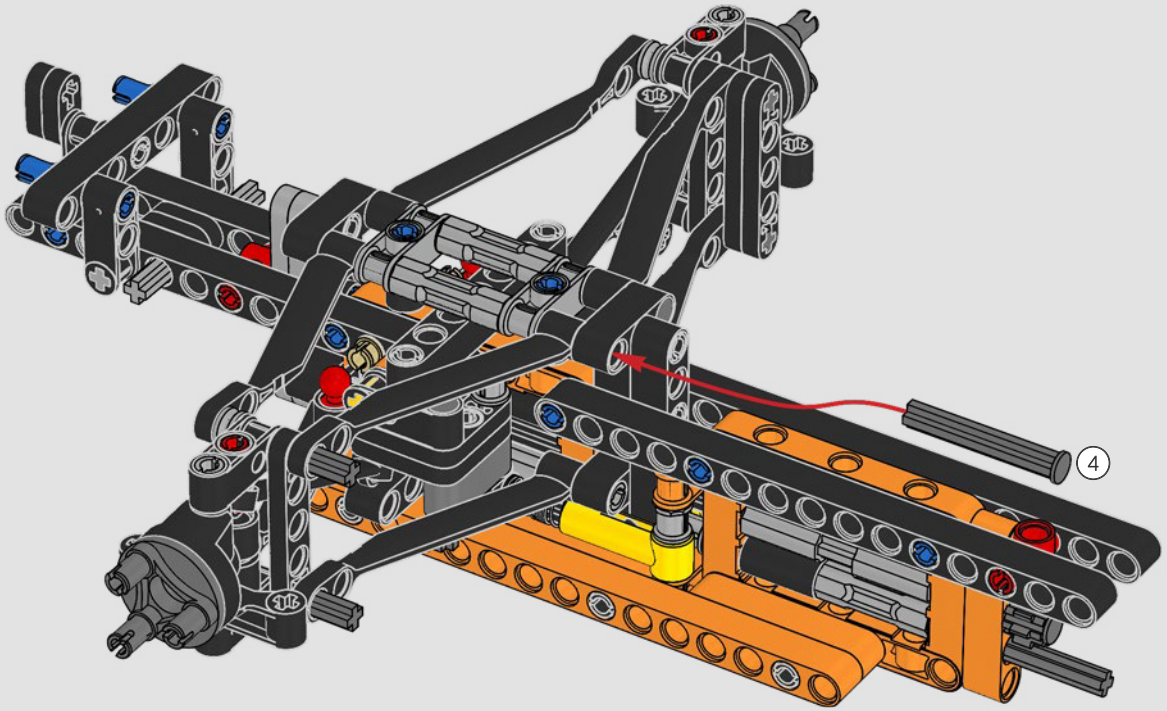

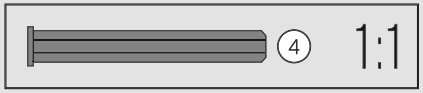

2x

121

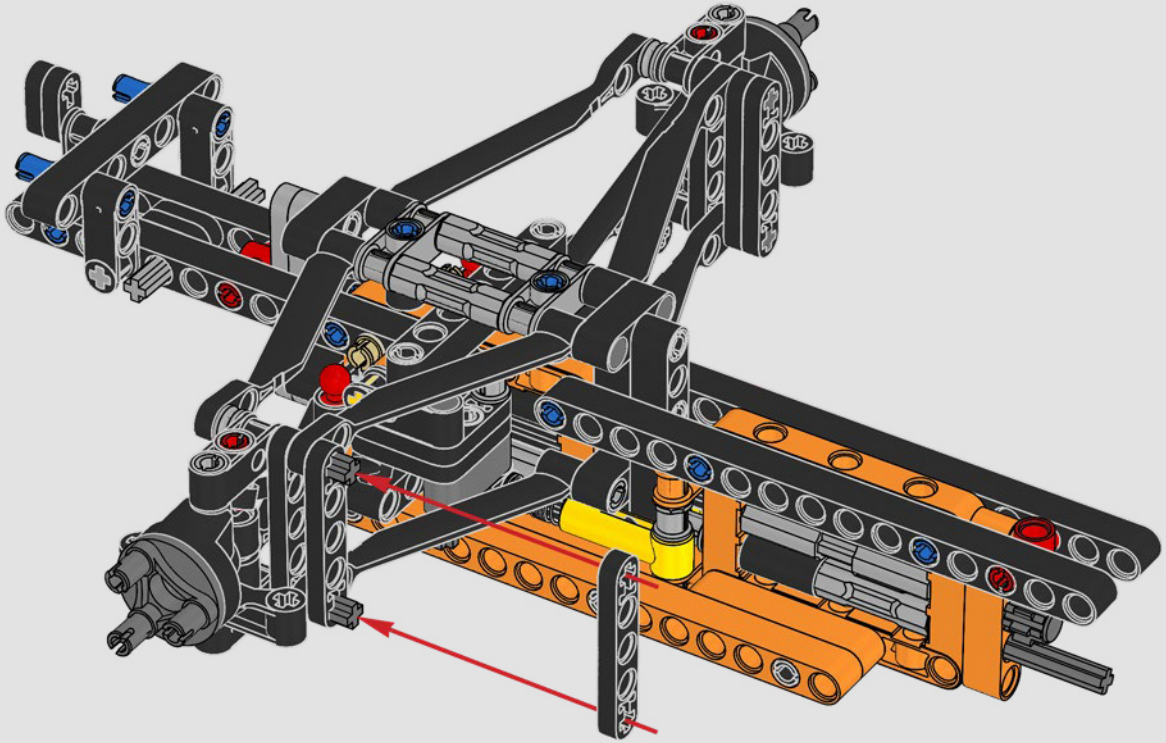

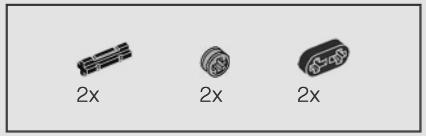

122

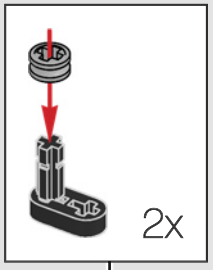

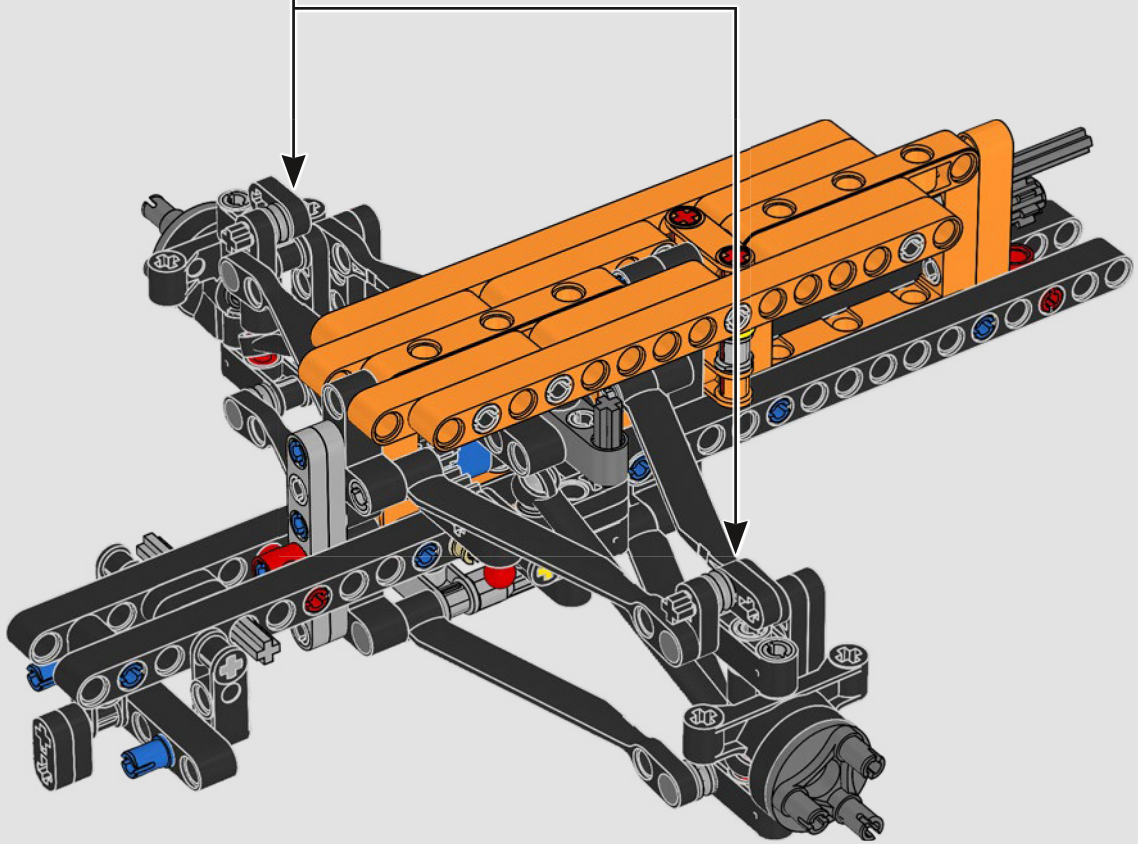

123

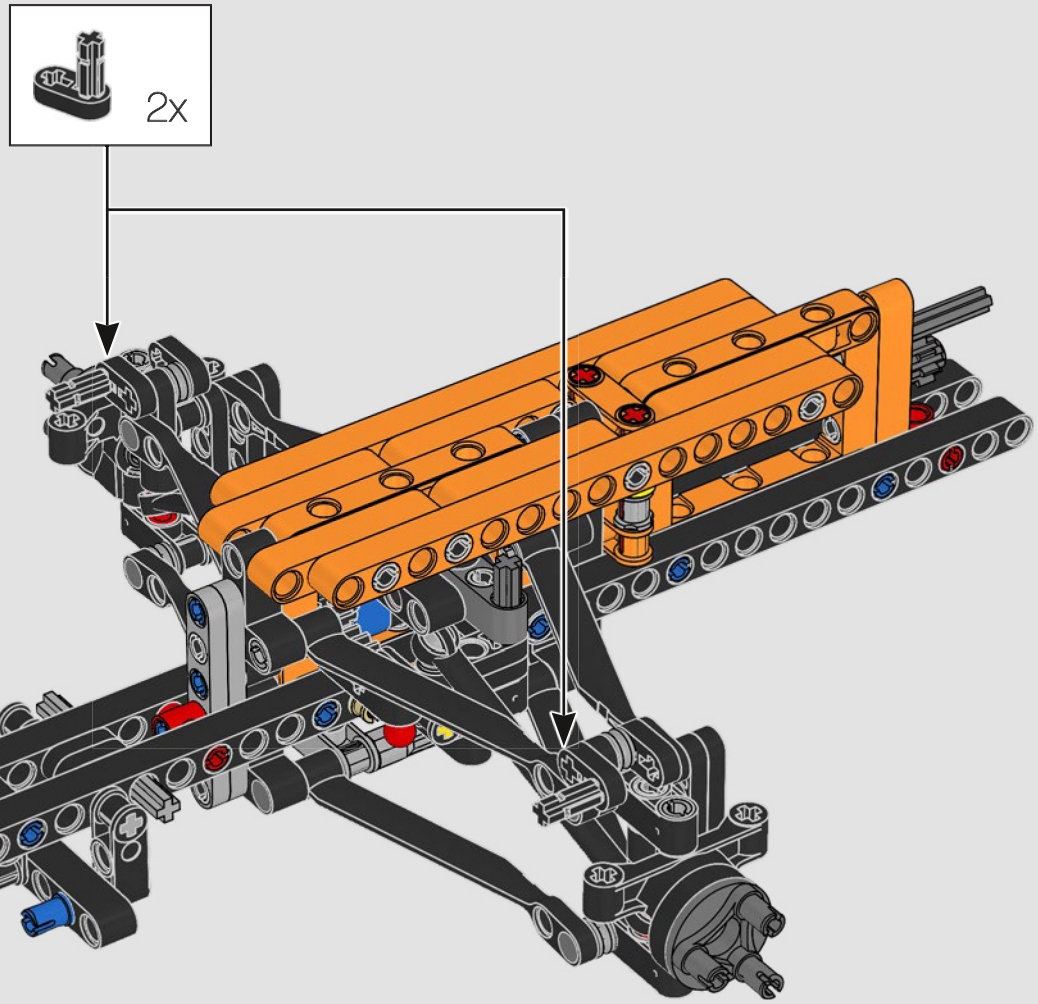

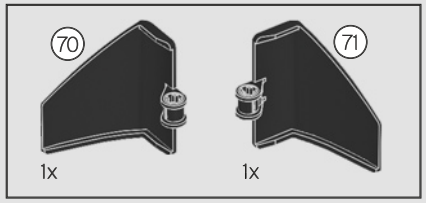

124

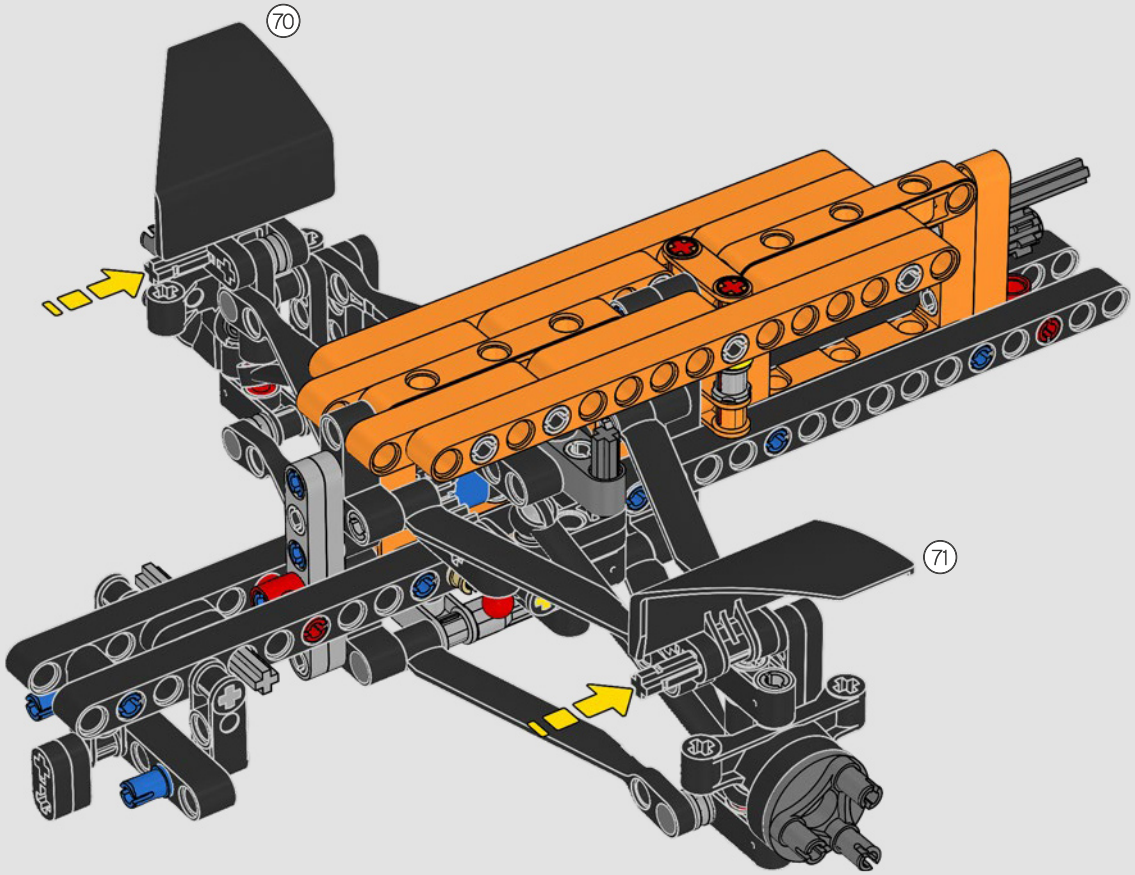

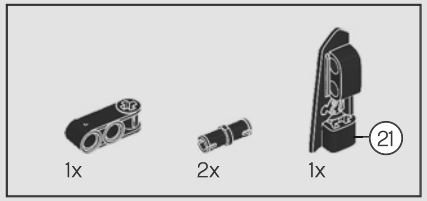

125

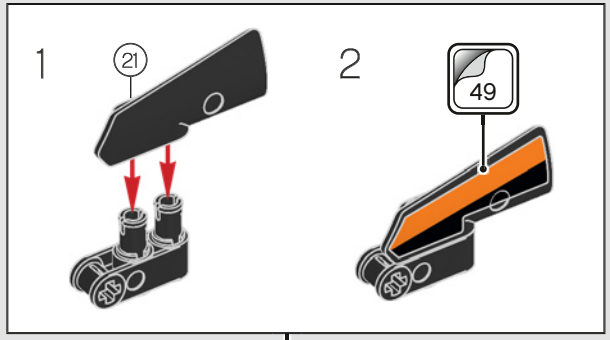

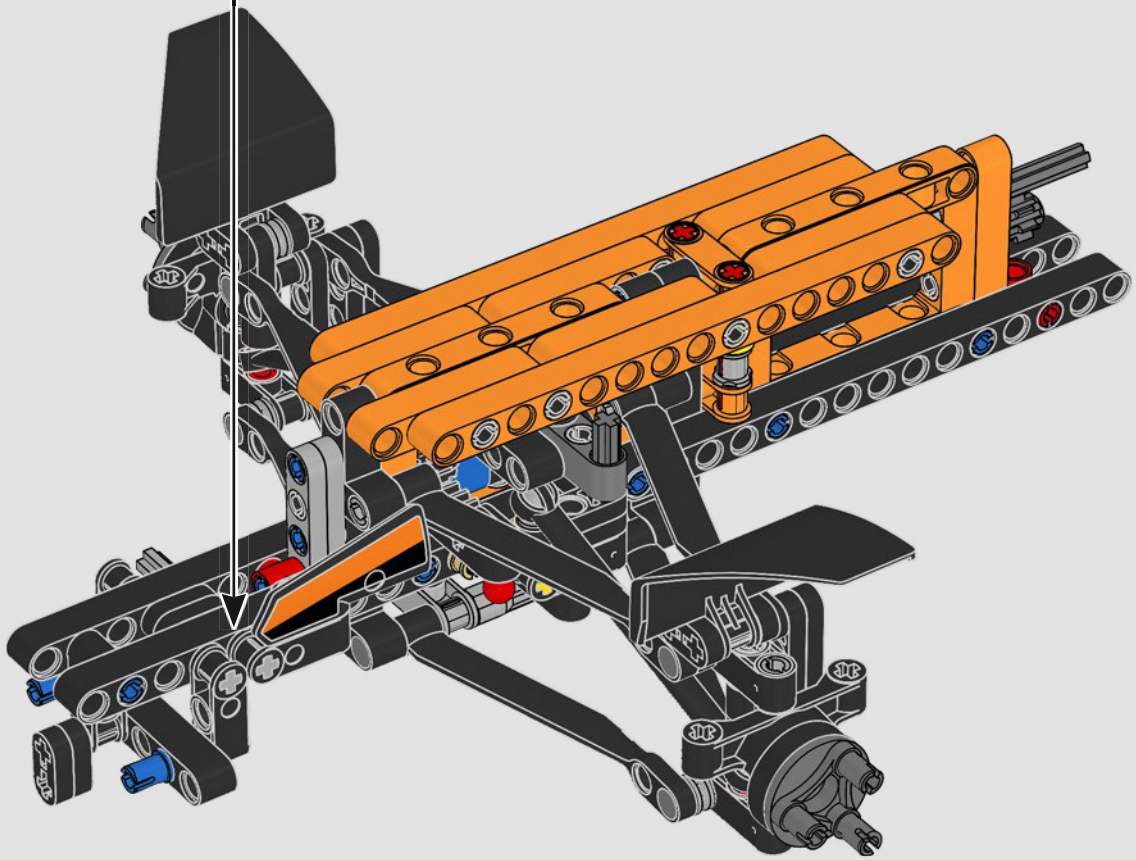

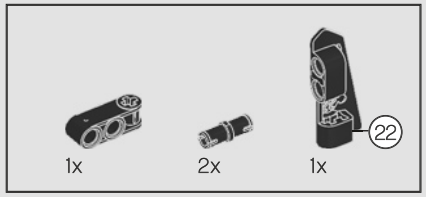

126

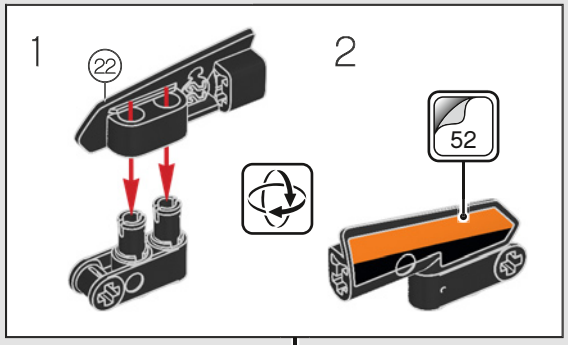

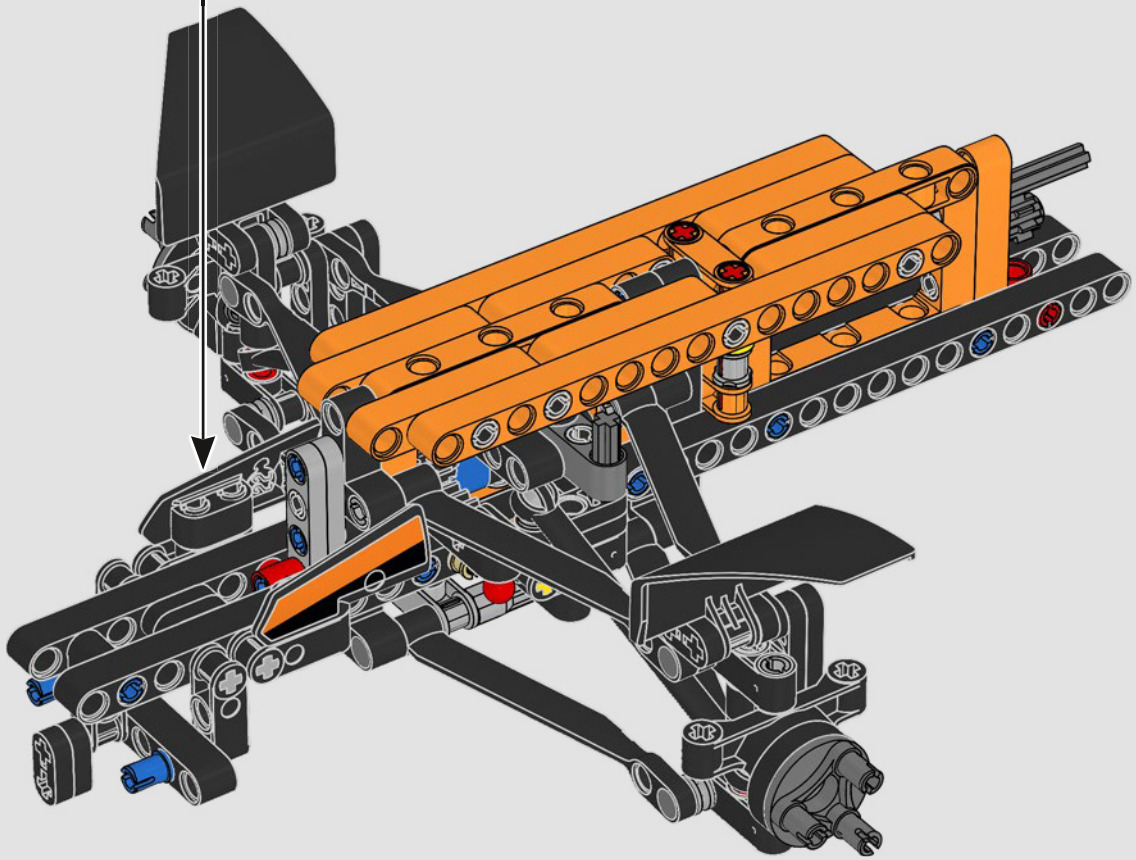

2x

127

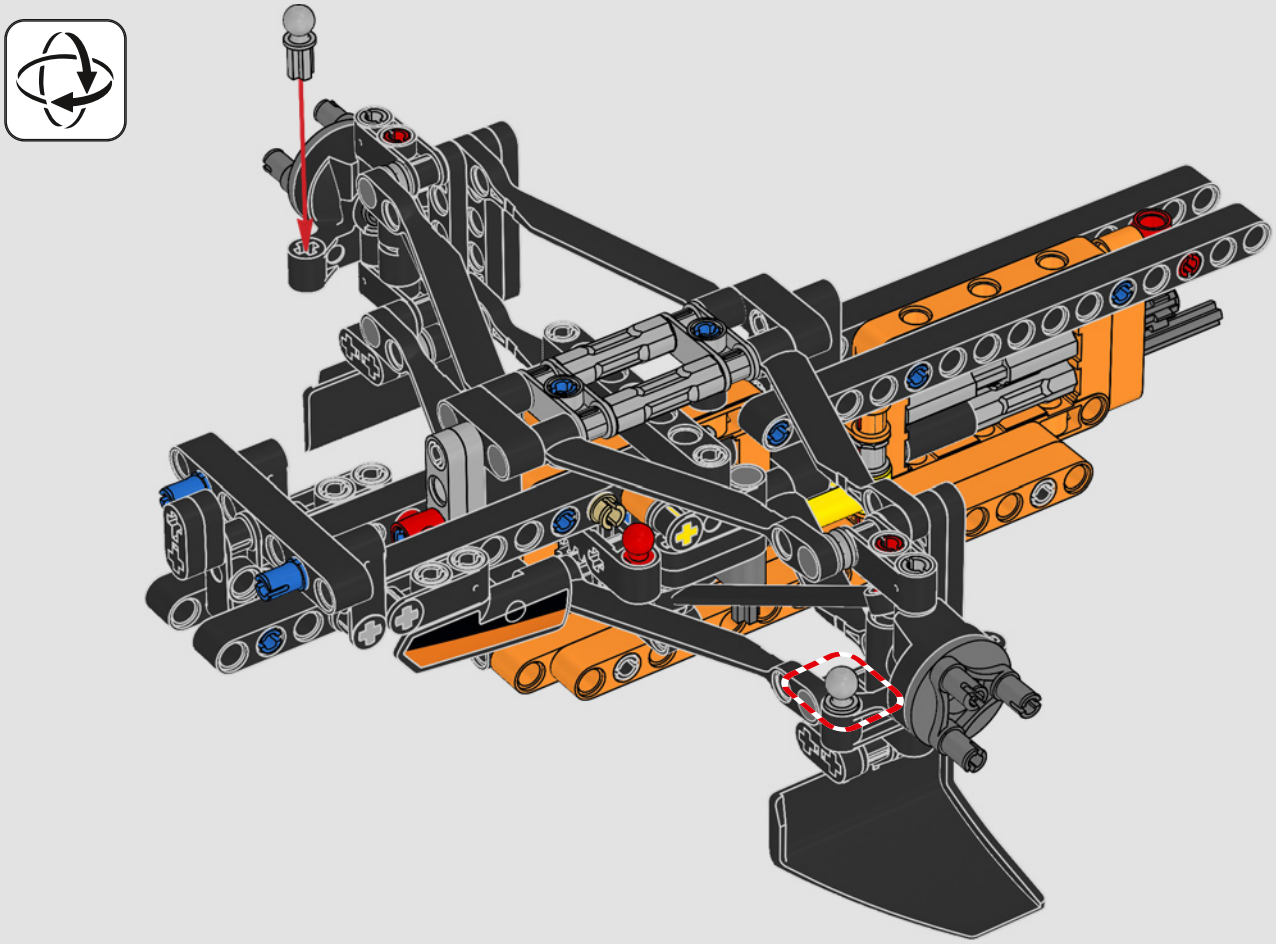

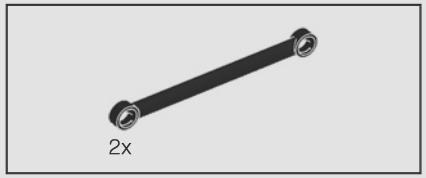

128

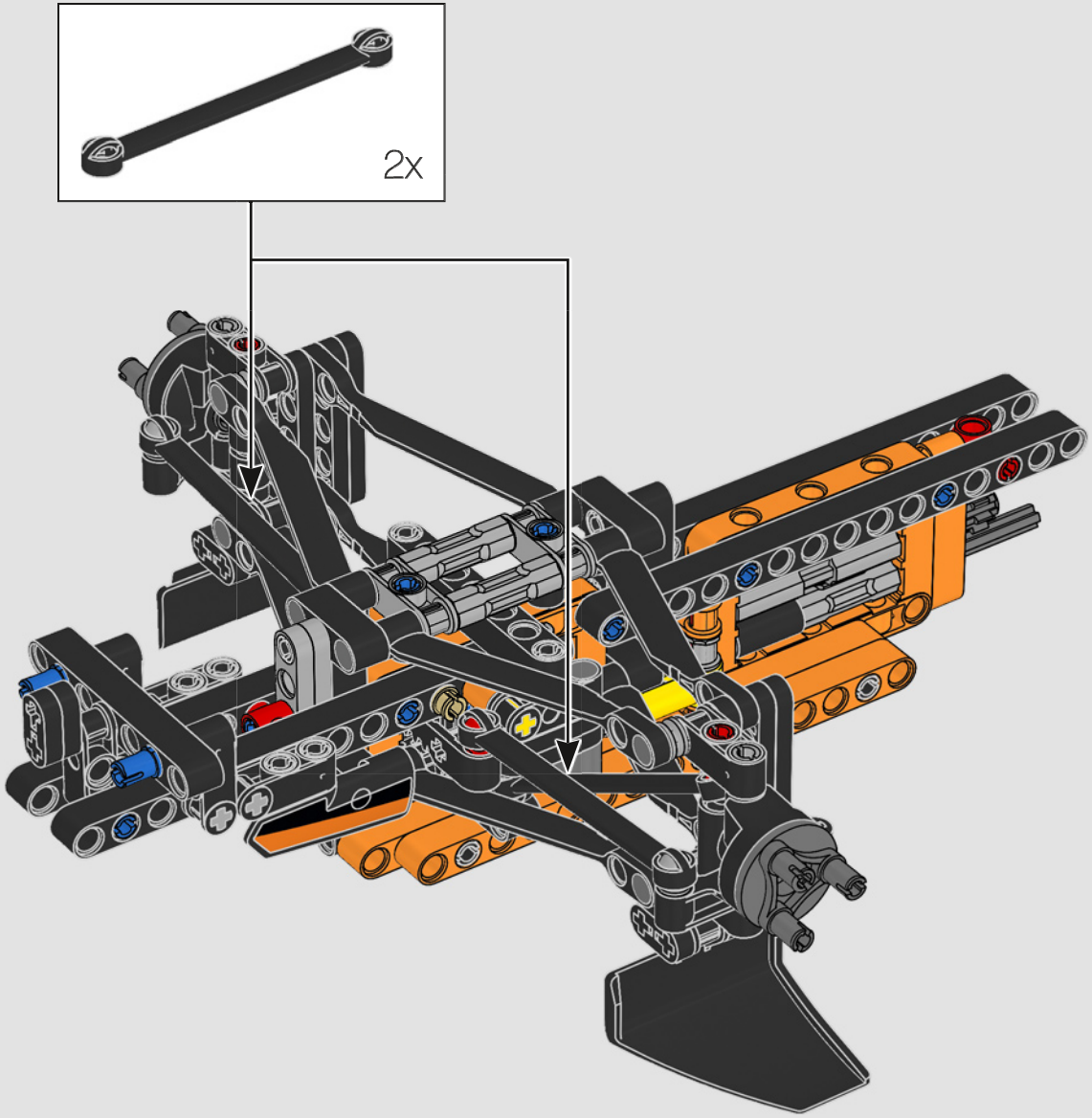

129

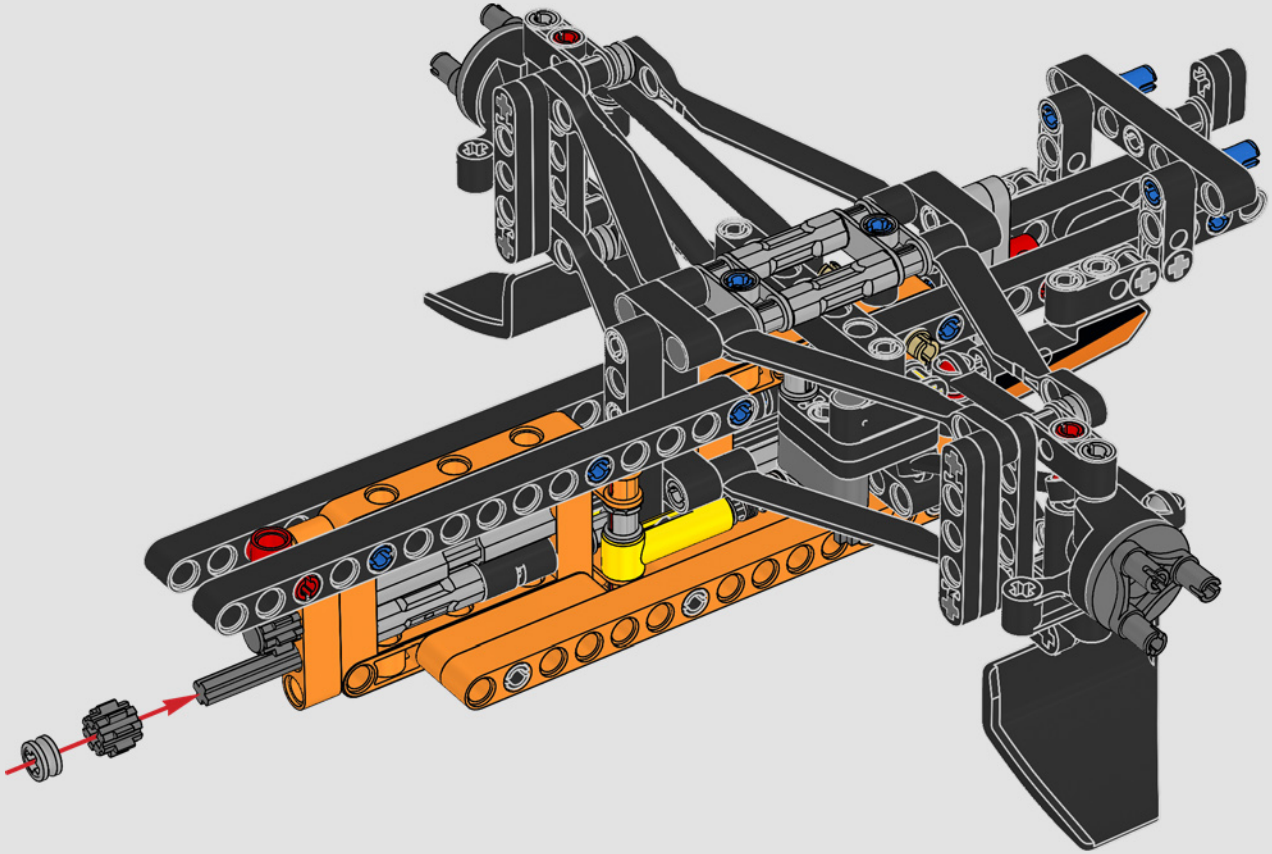

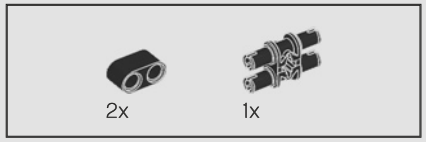

130

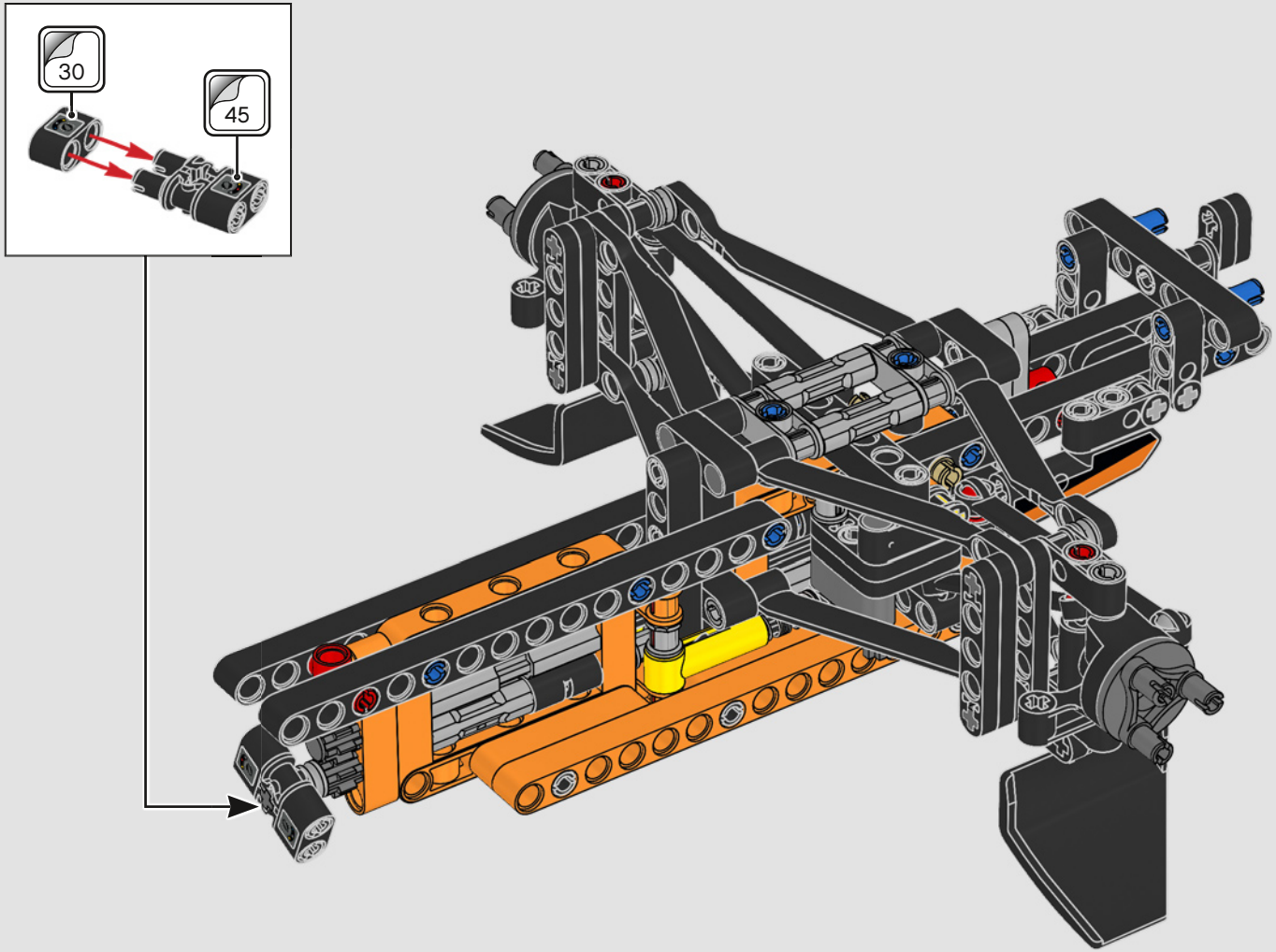

4x

131

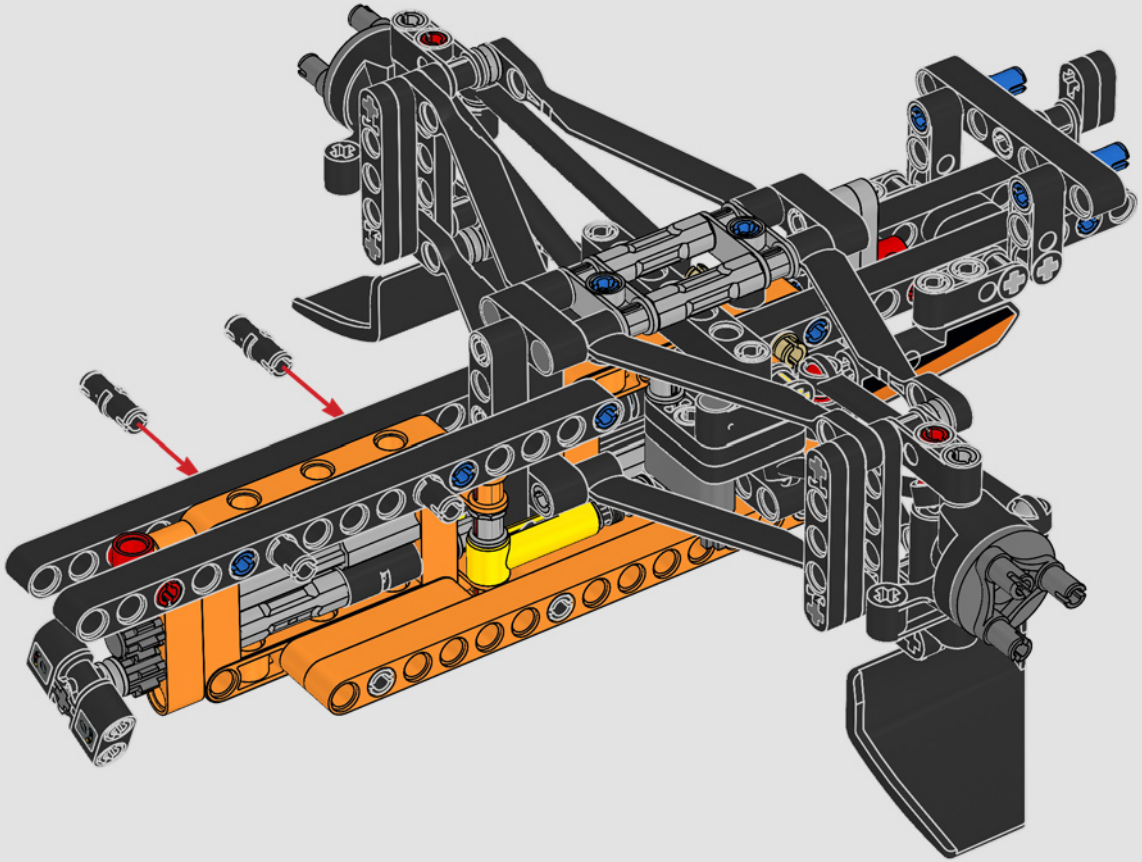

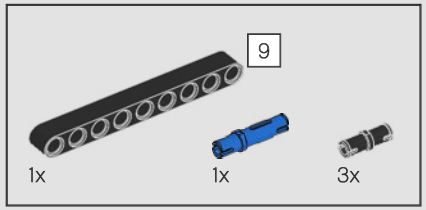

132

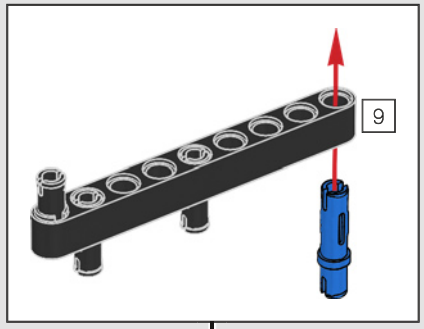

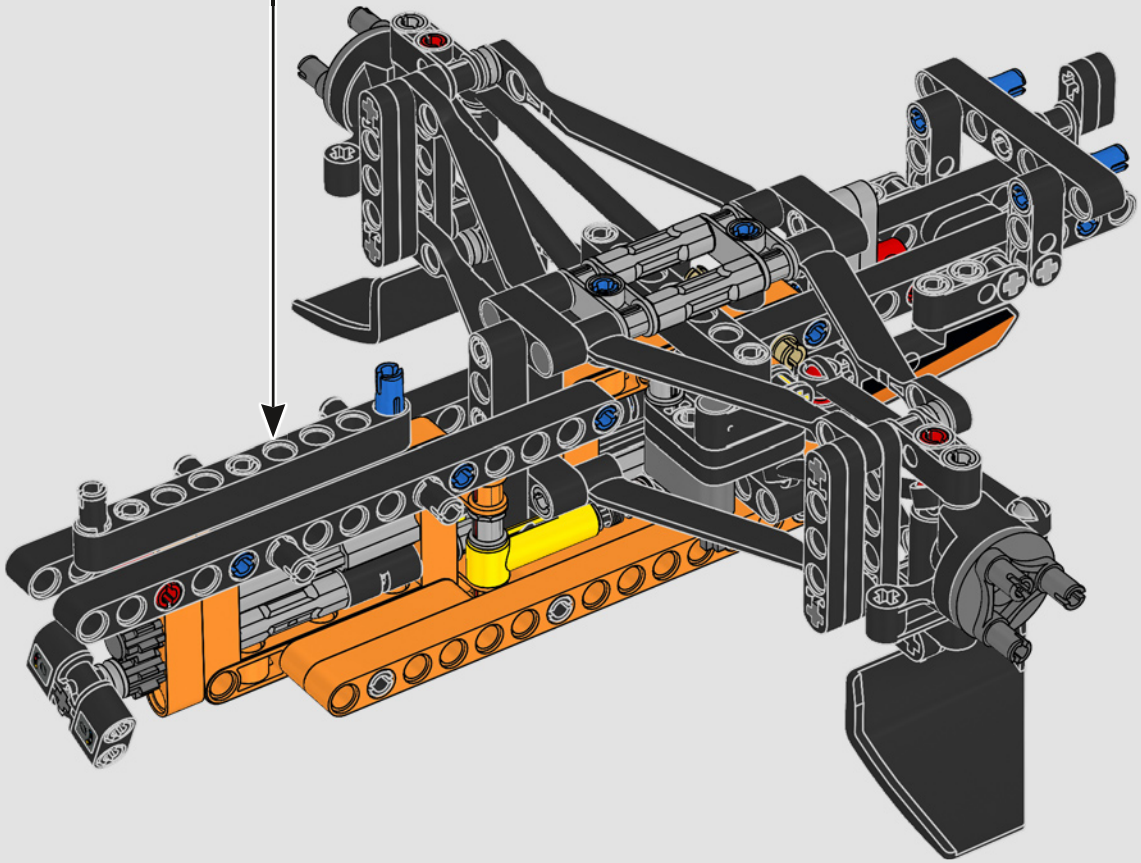

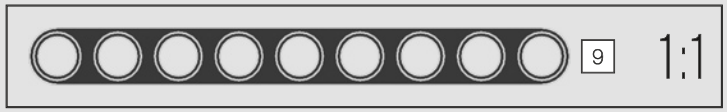

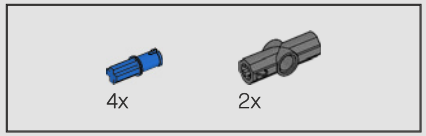

133

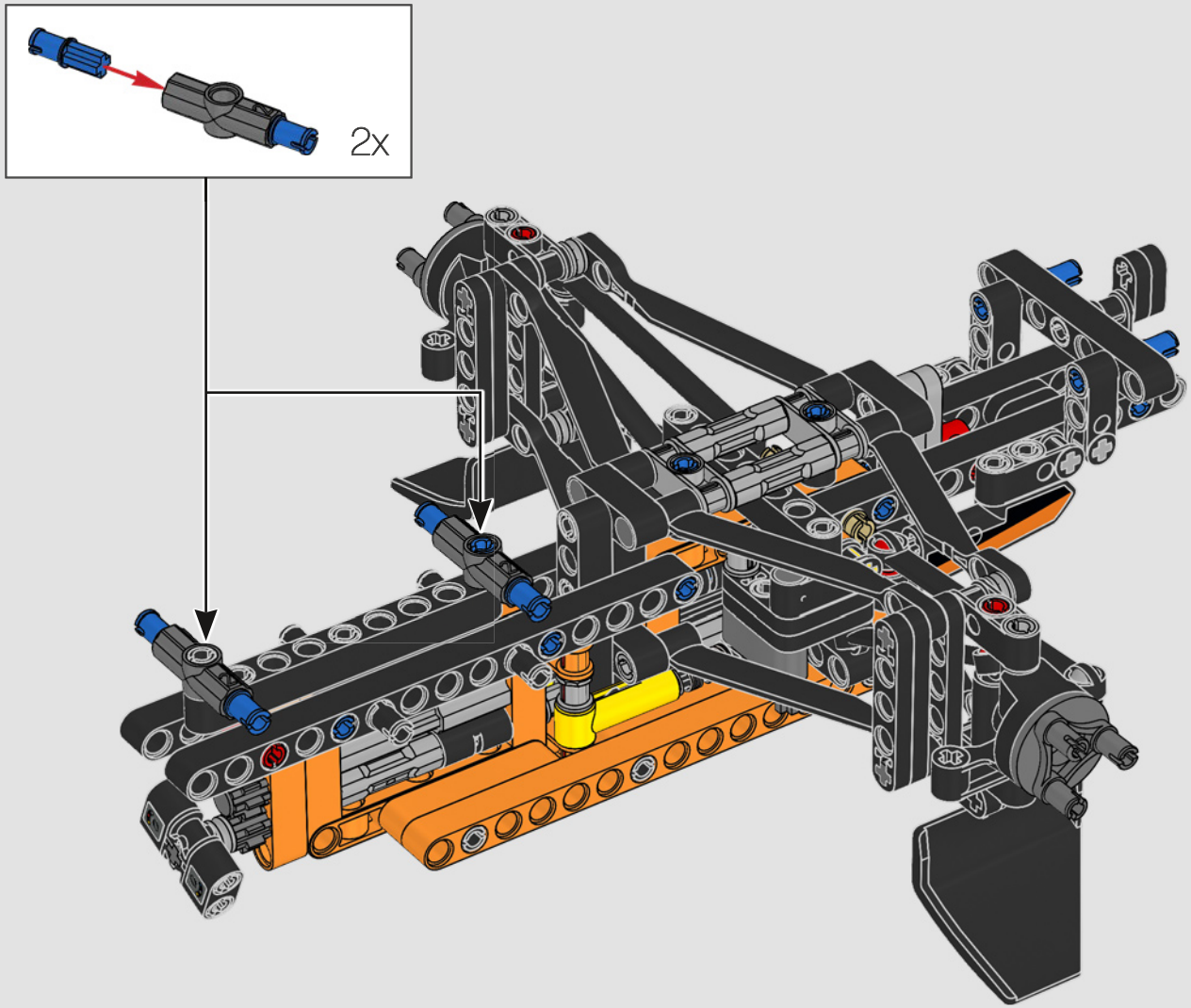

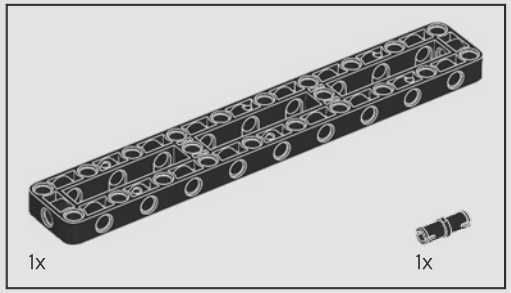

134

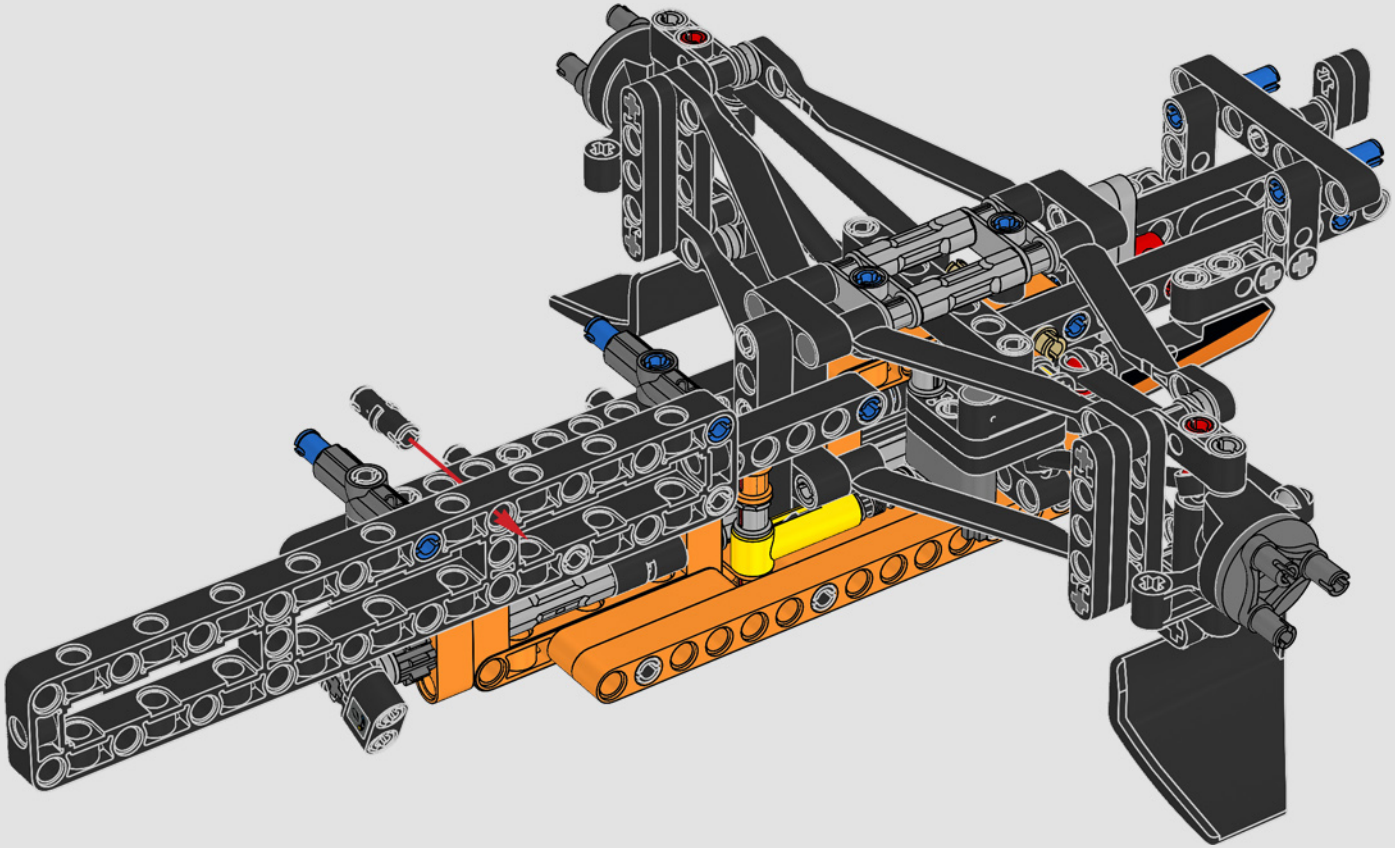

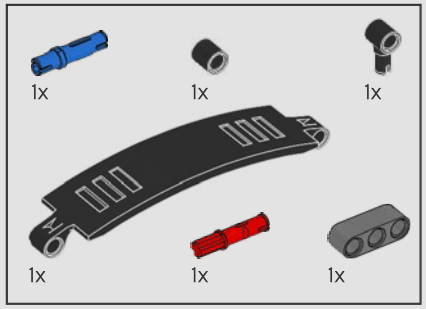

135

1

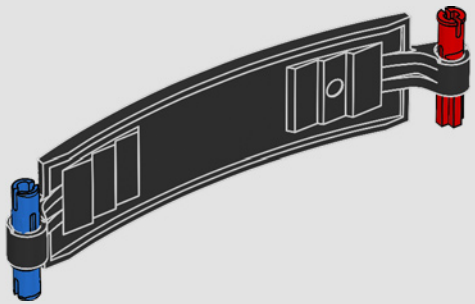

2

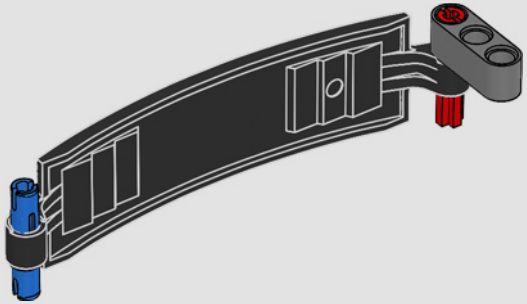

3

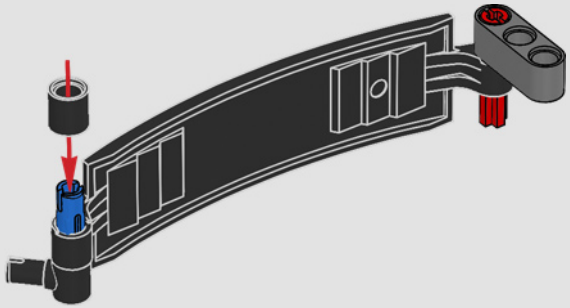

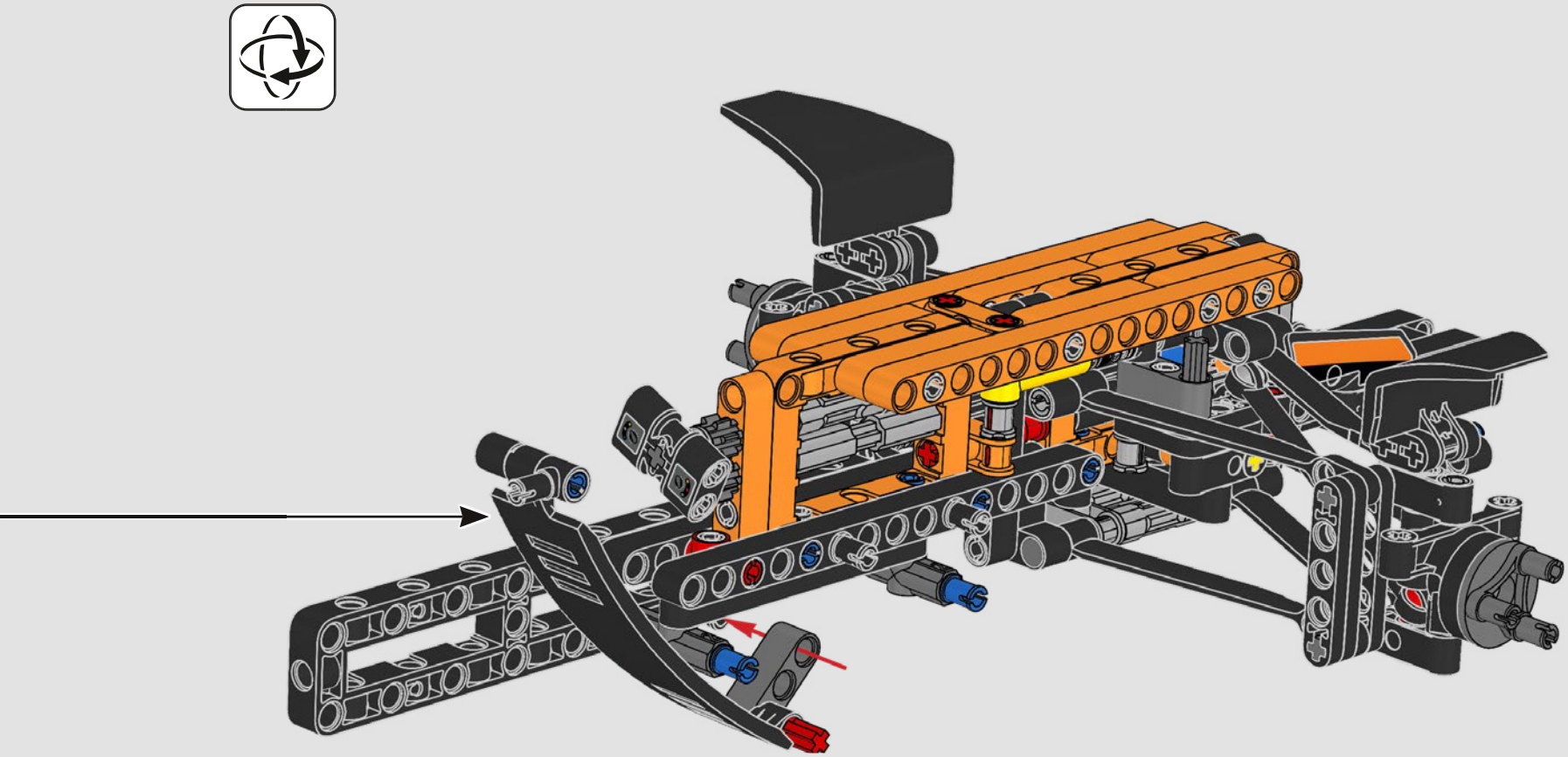

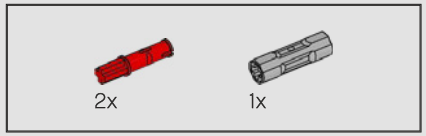

136

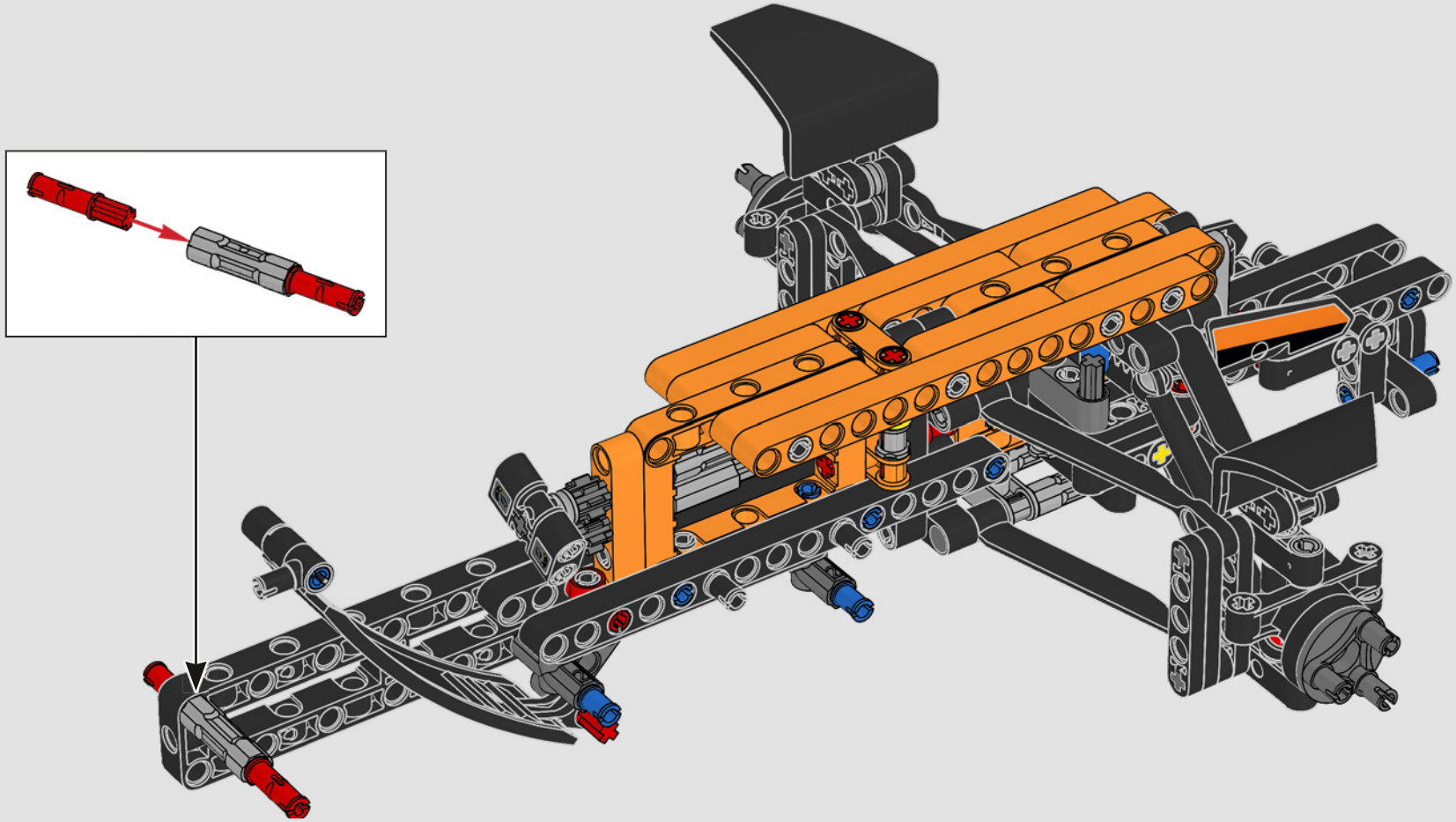

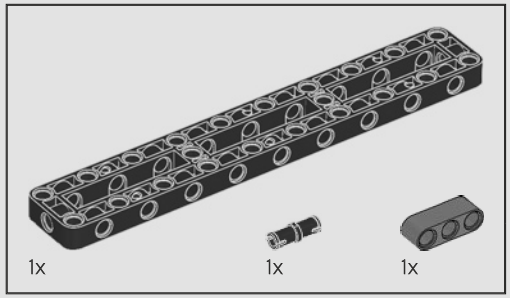

137

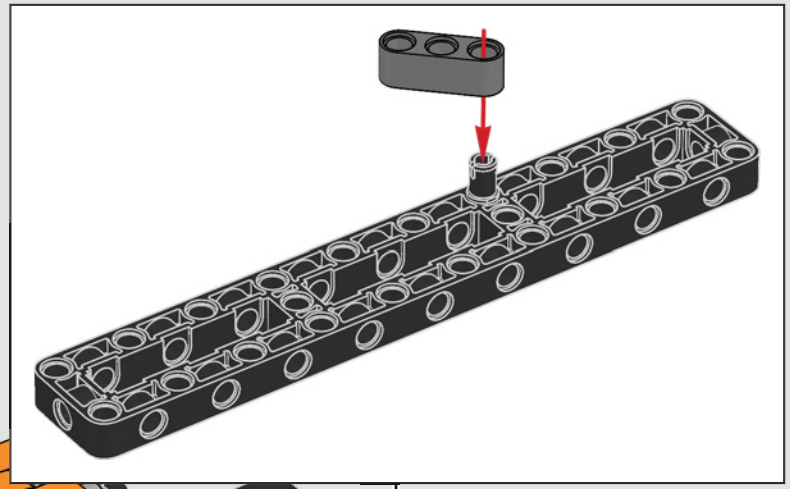

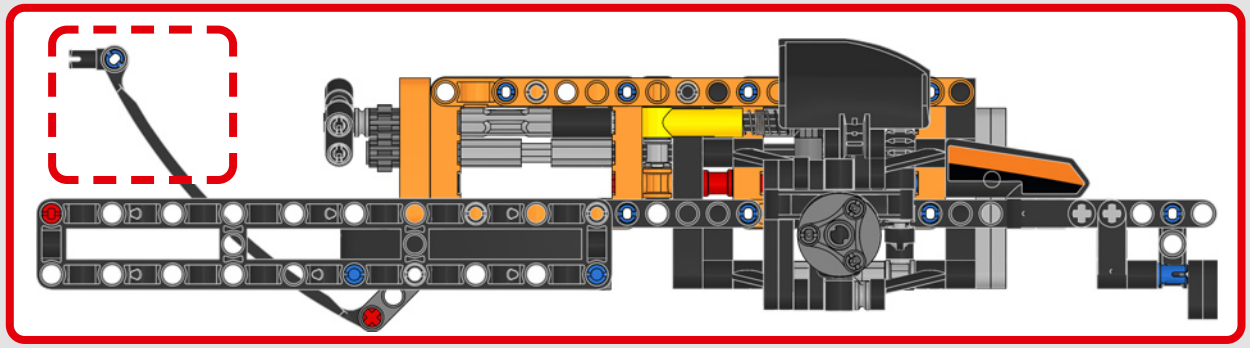

2x

138

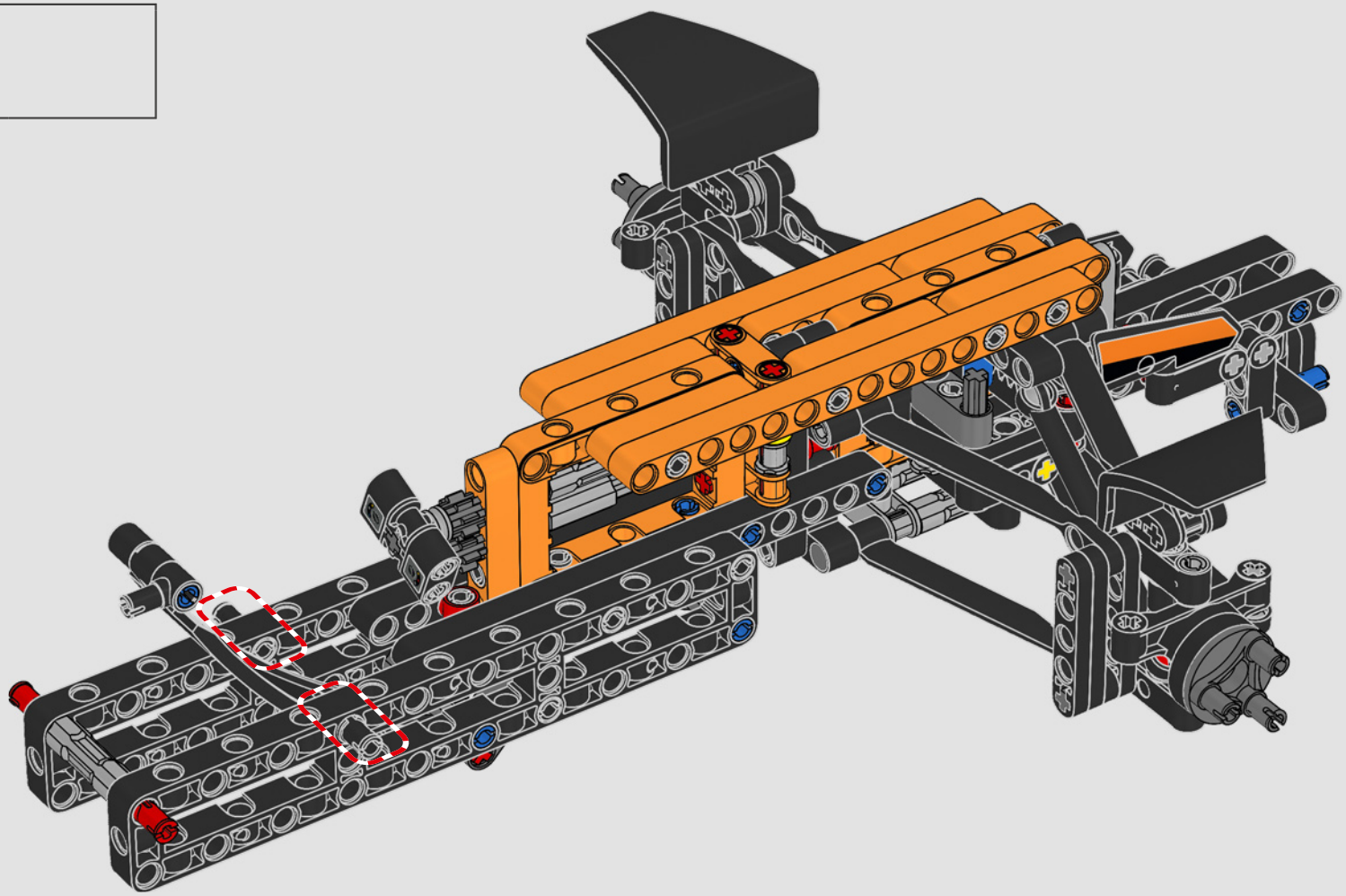

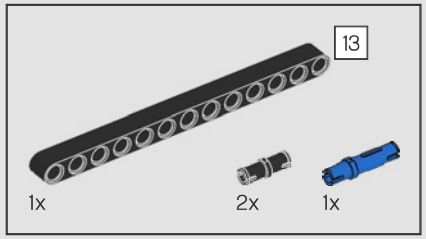

139

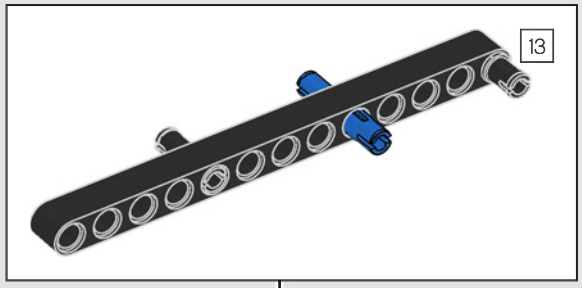

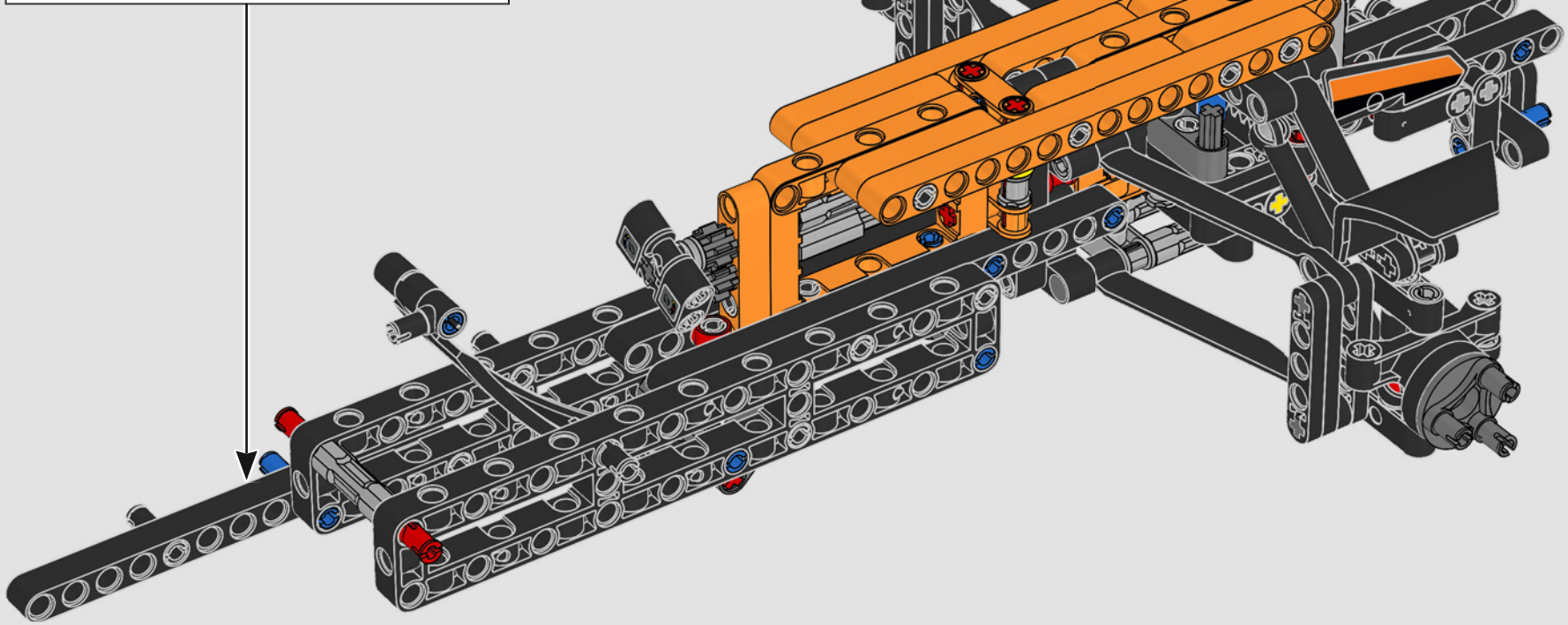

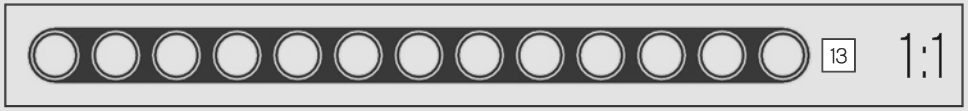

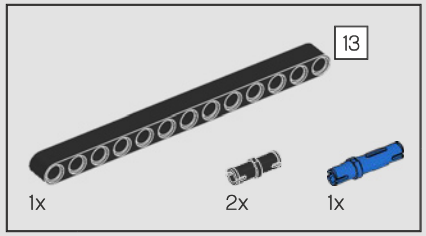

140

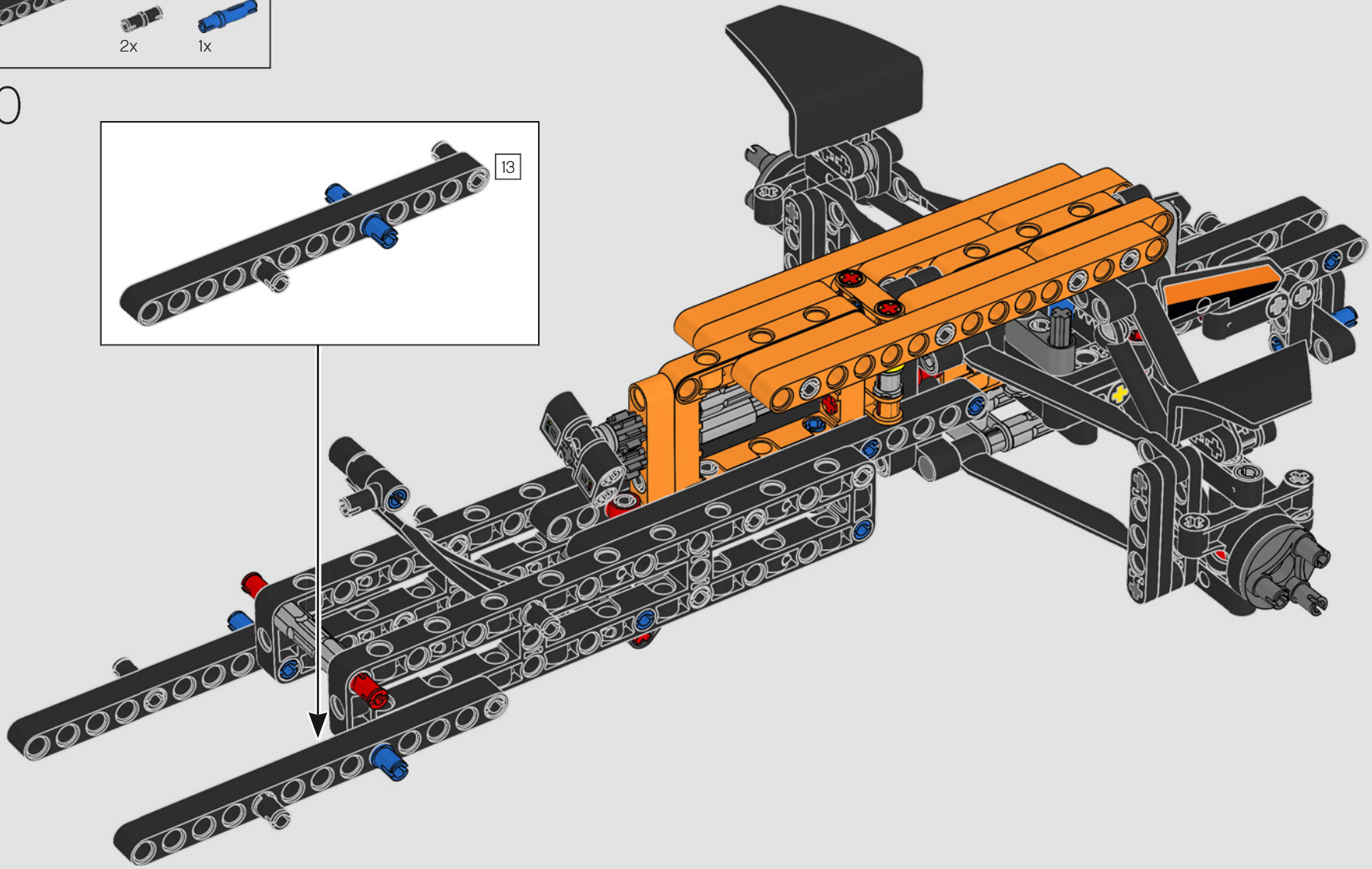

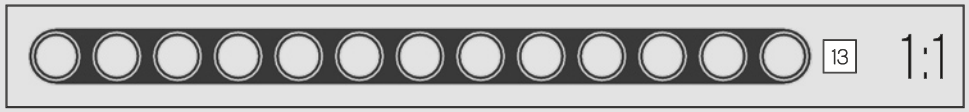

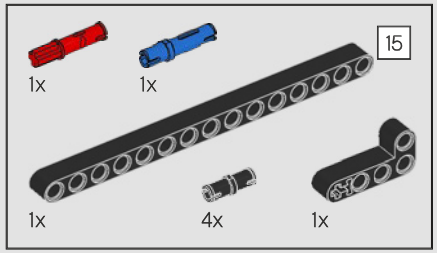

141

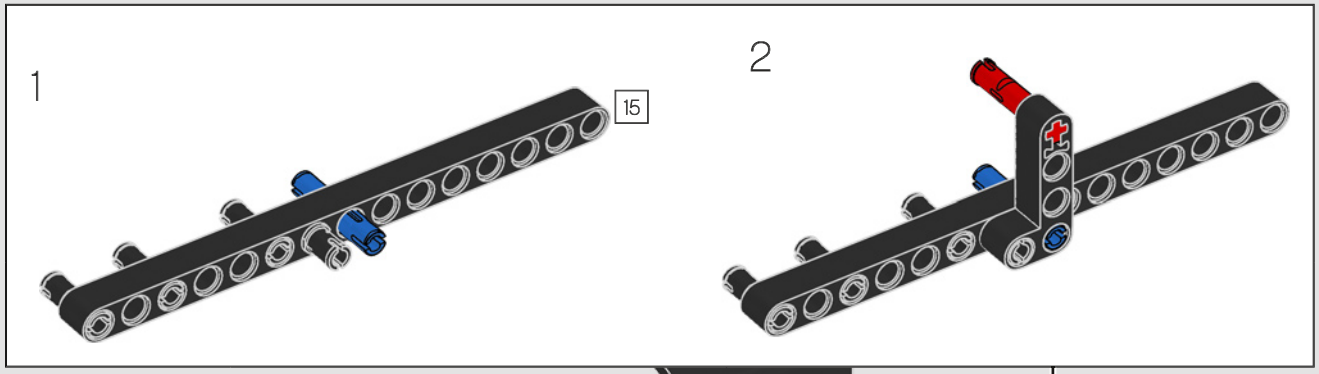

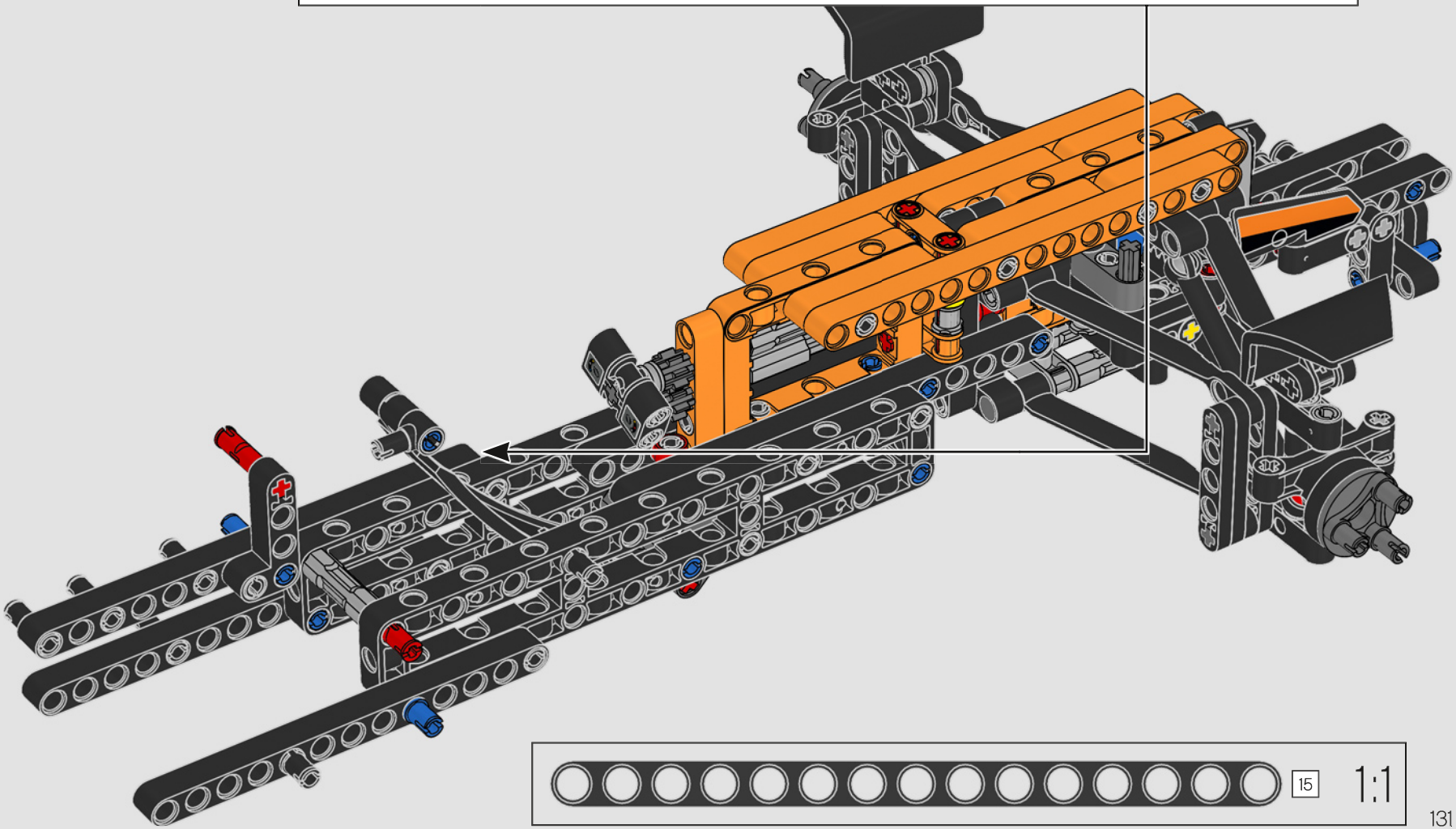

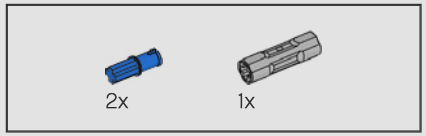

142

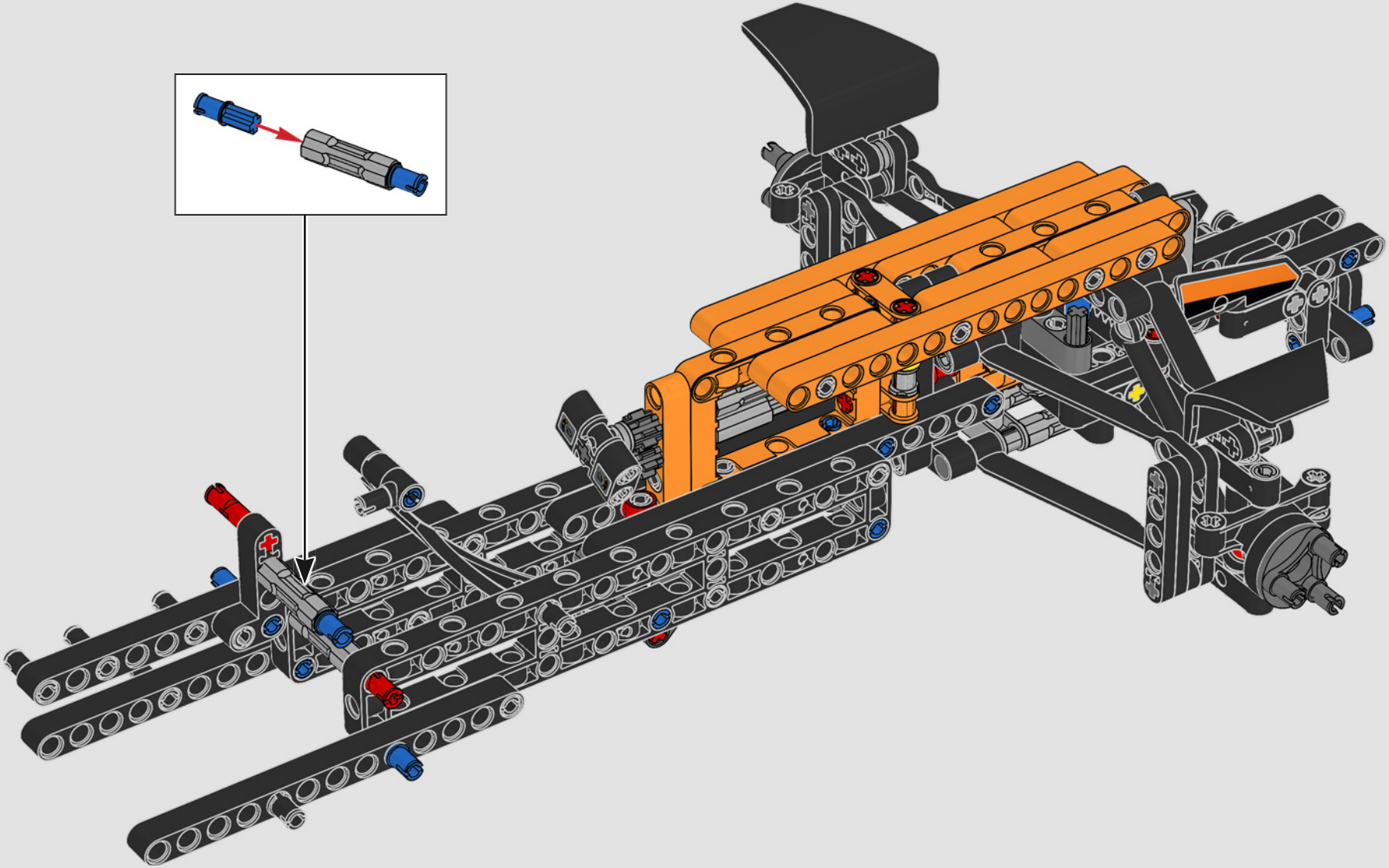

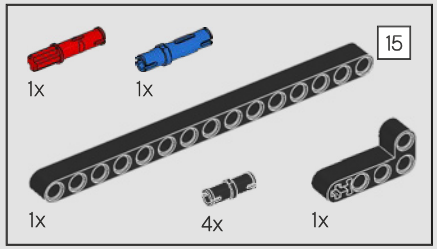

143

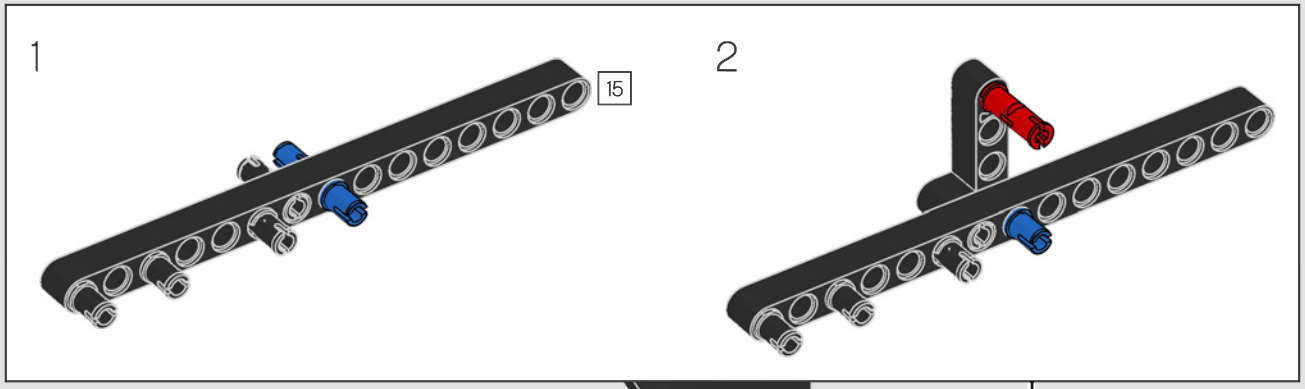

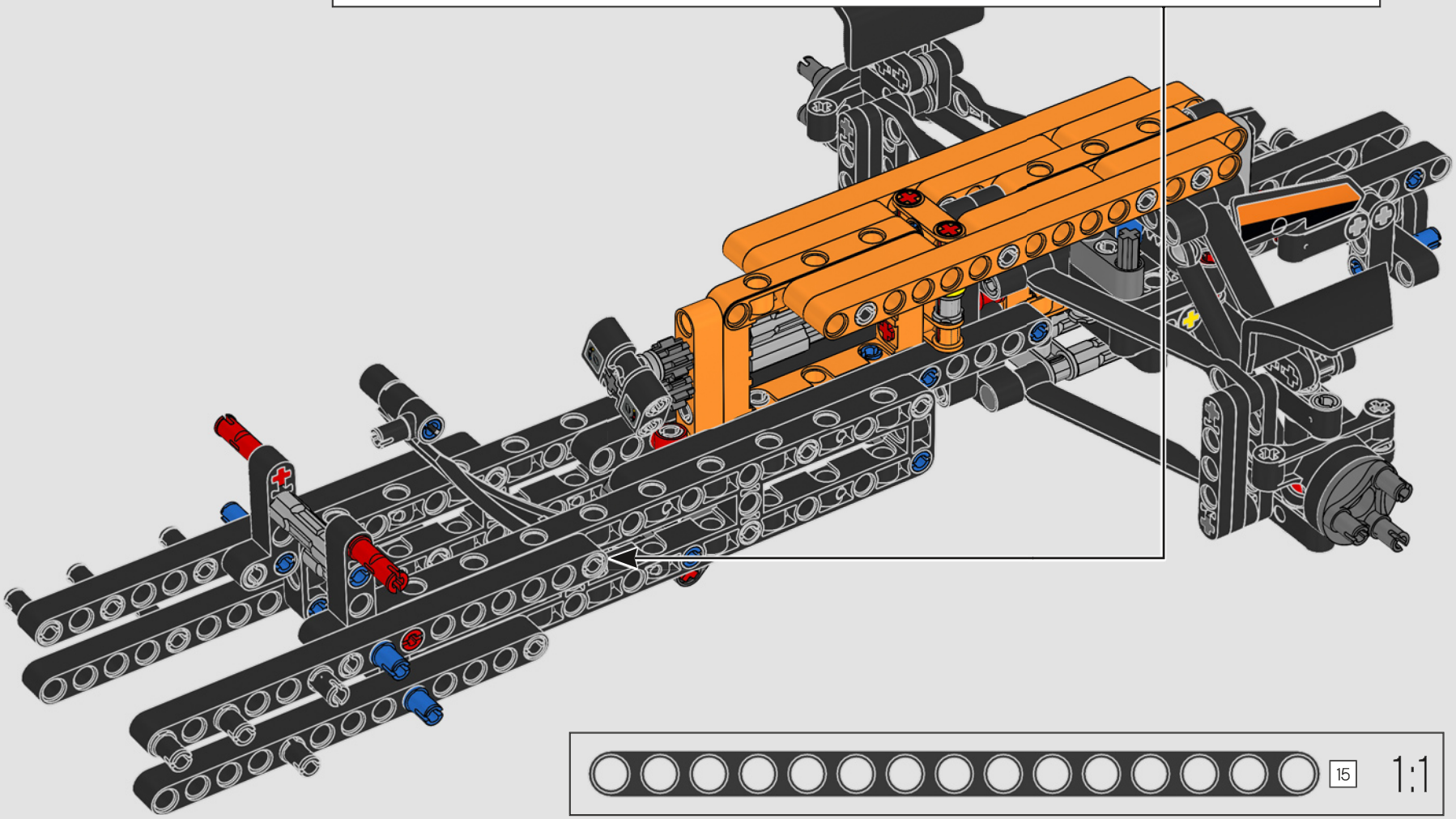

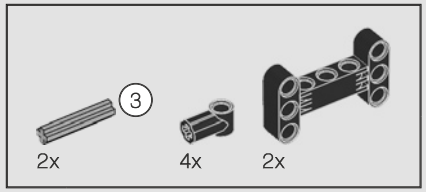

144

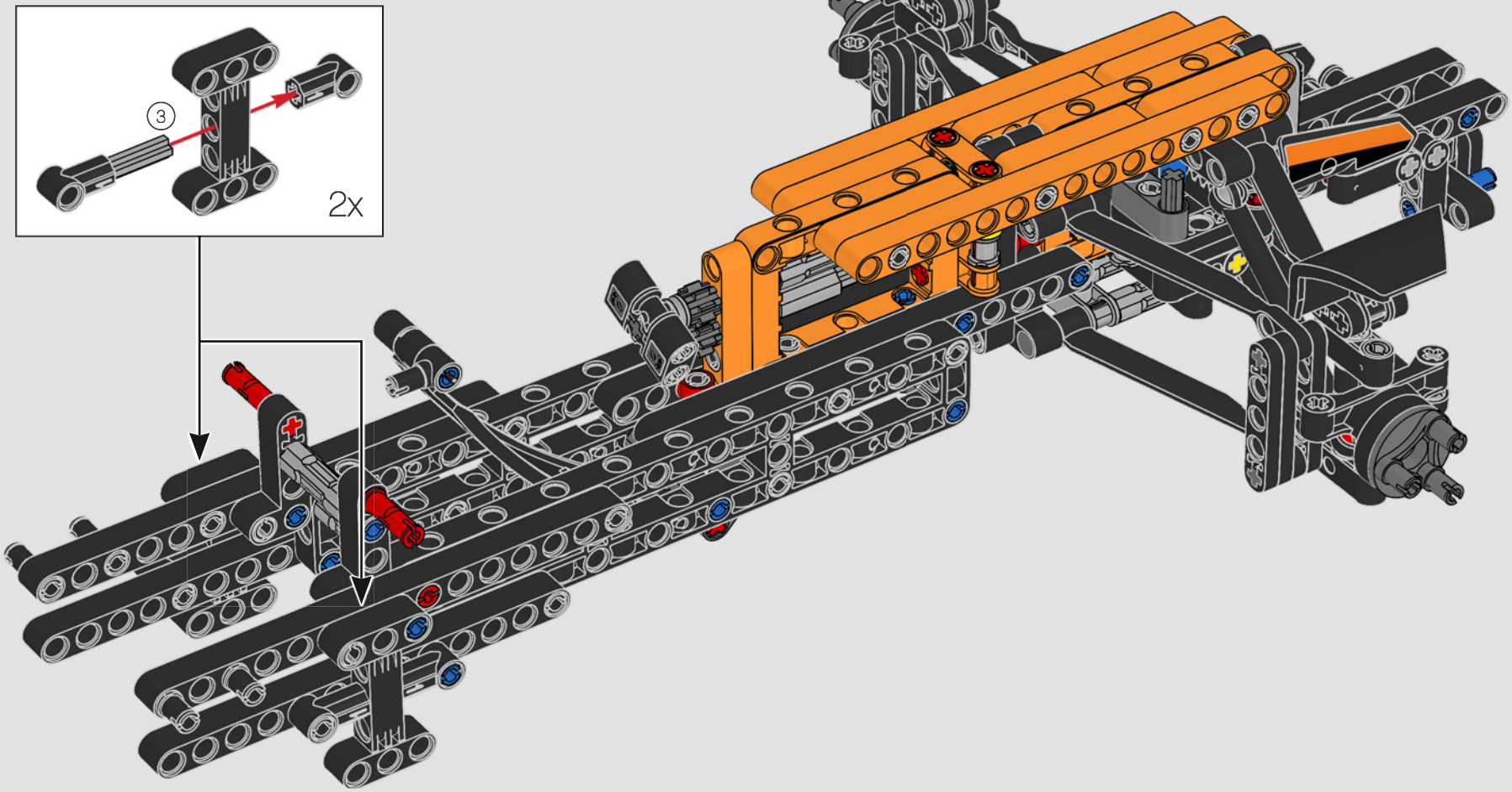

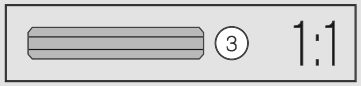

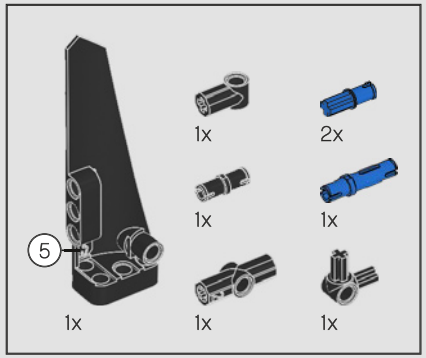

145

1

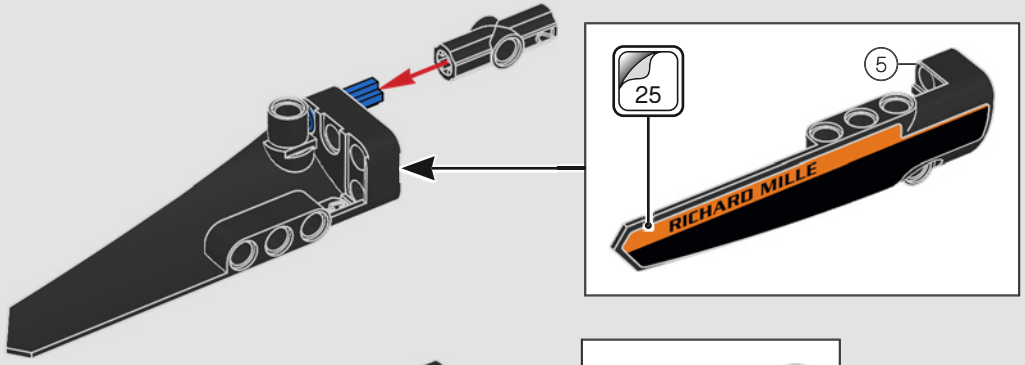

2

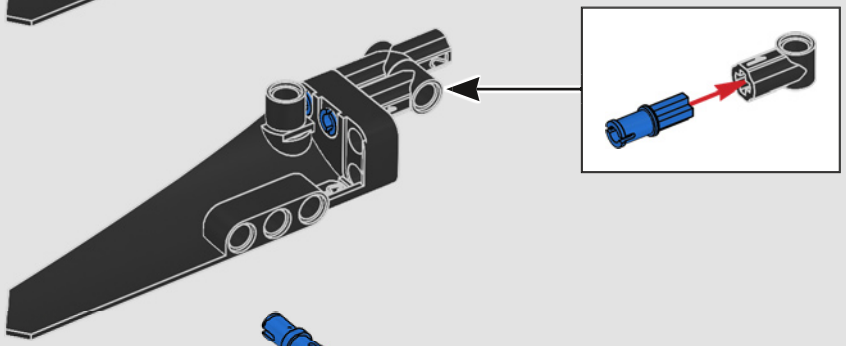

3

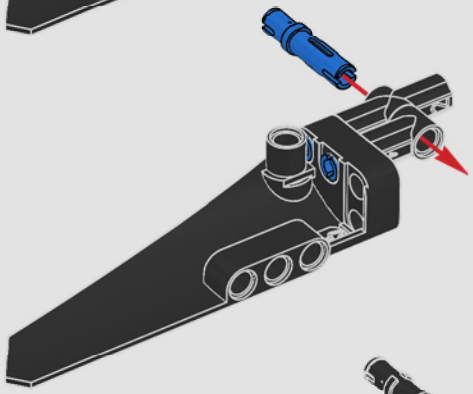

4

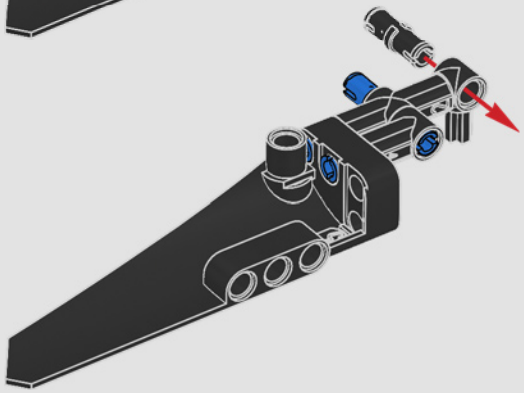

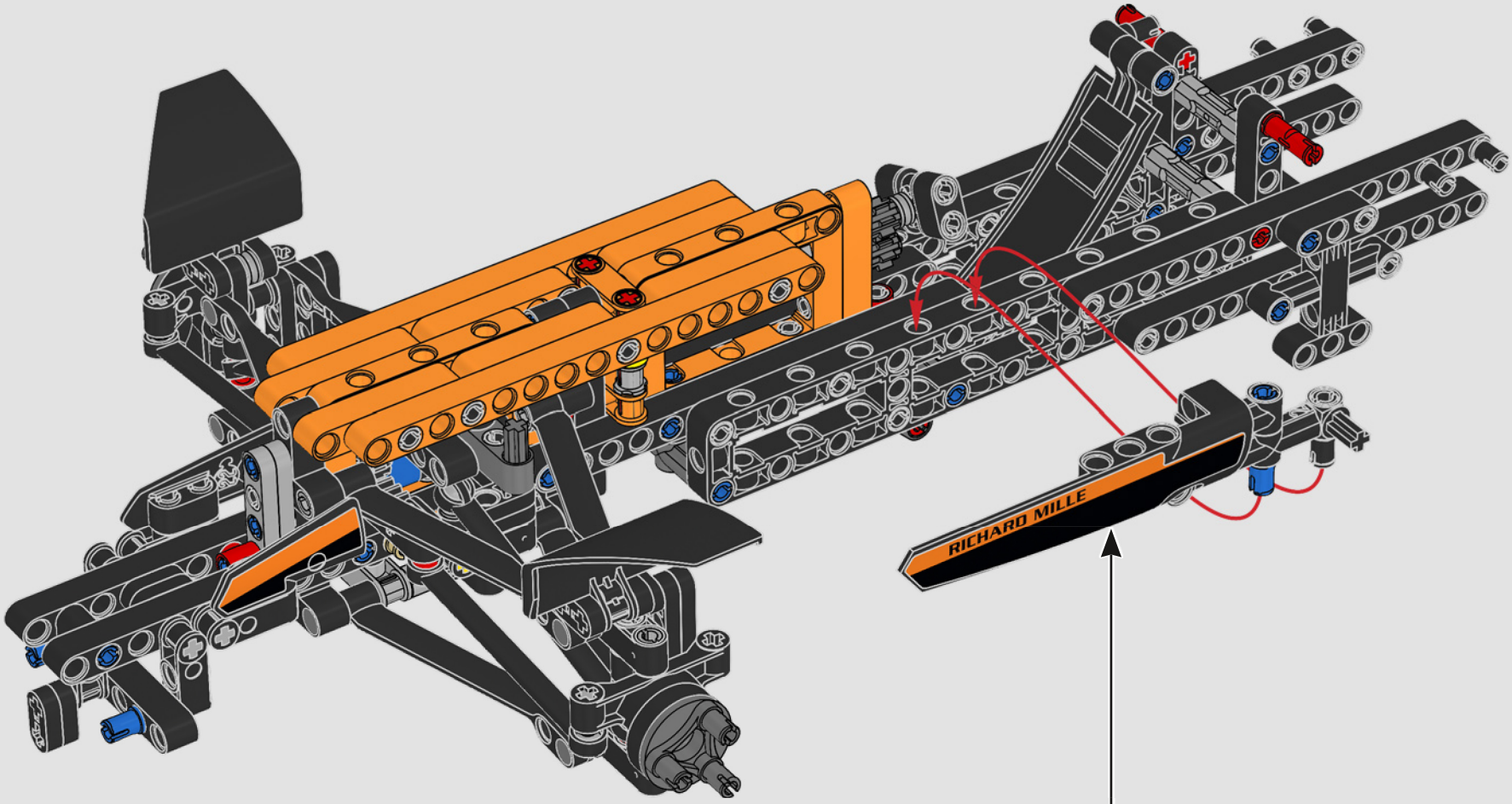
RICHARD MILLE

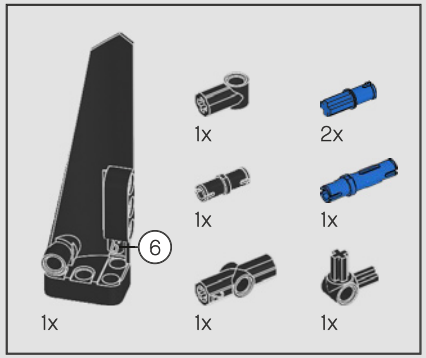

146

1

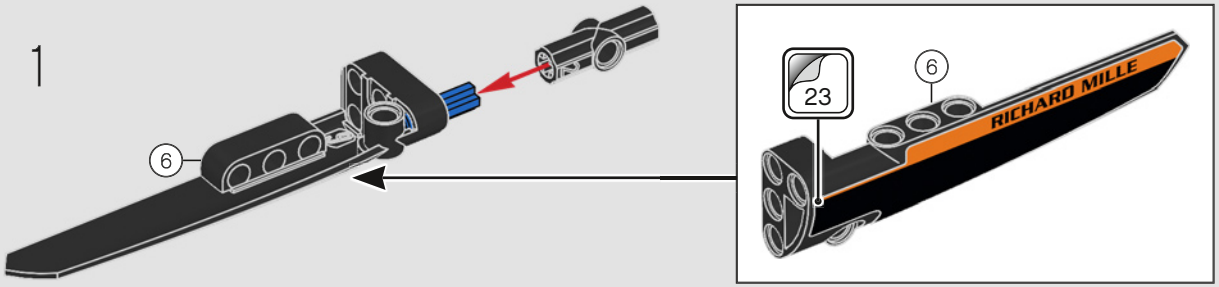

2

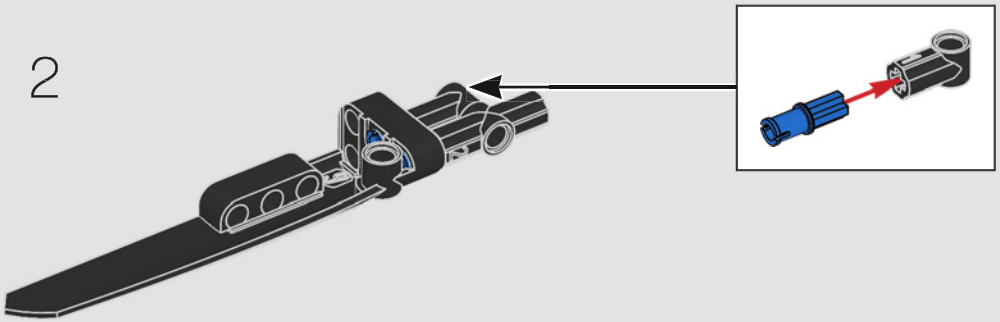

3

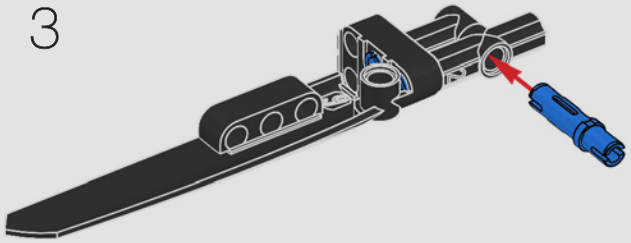

4

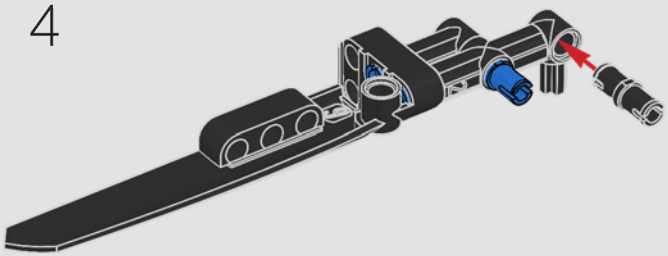

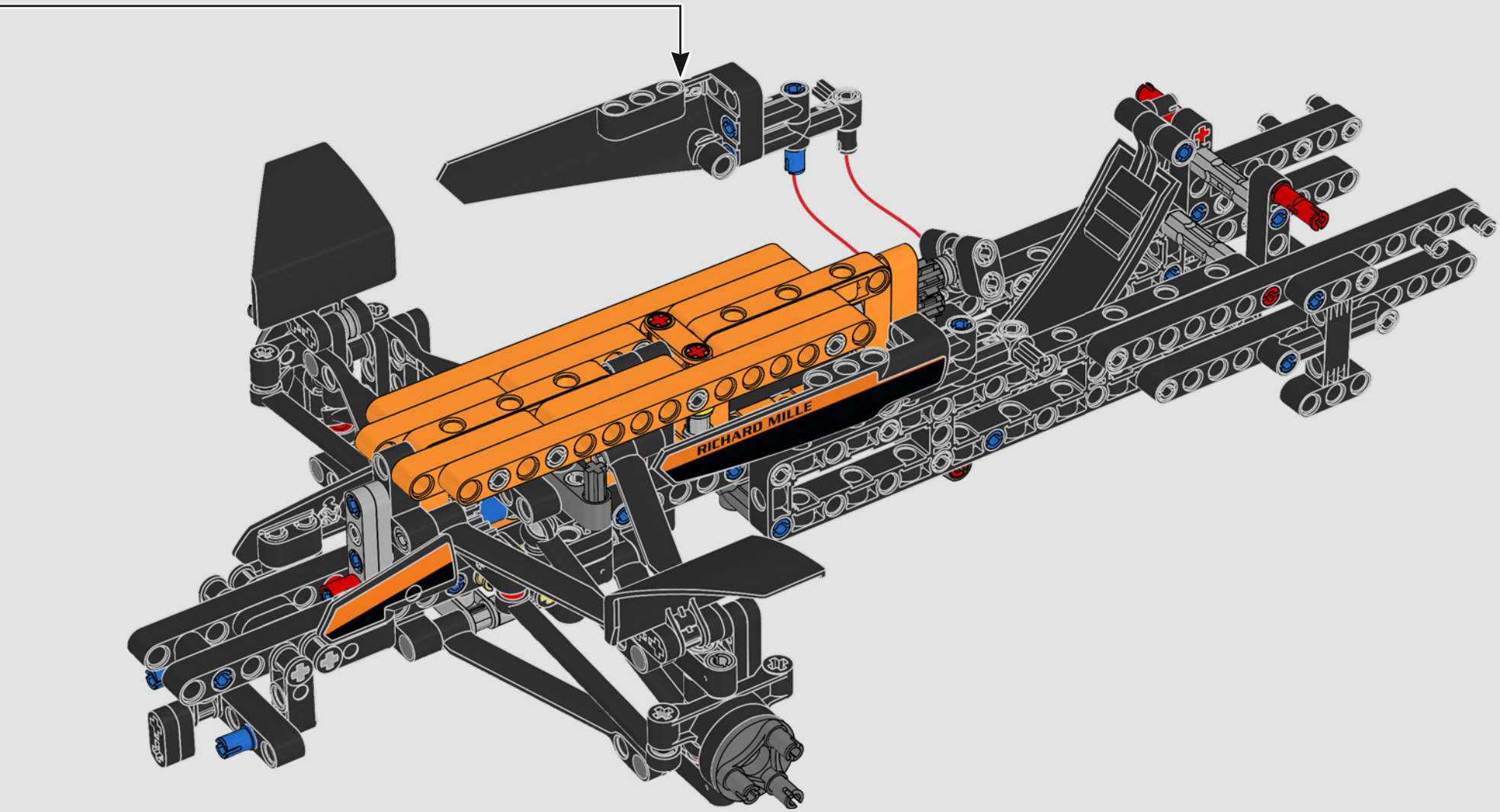
RICHARD MILLE

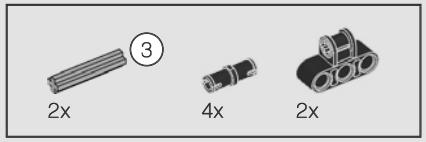

147

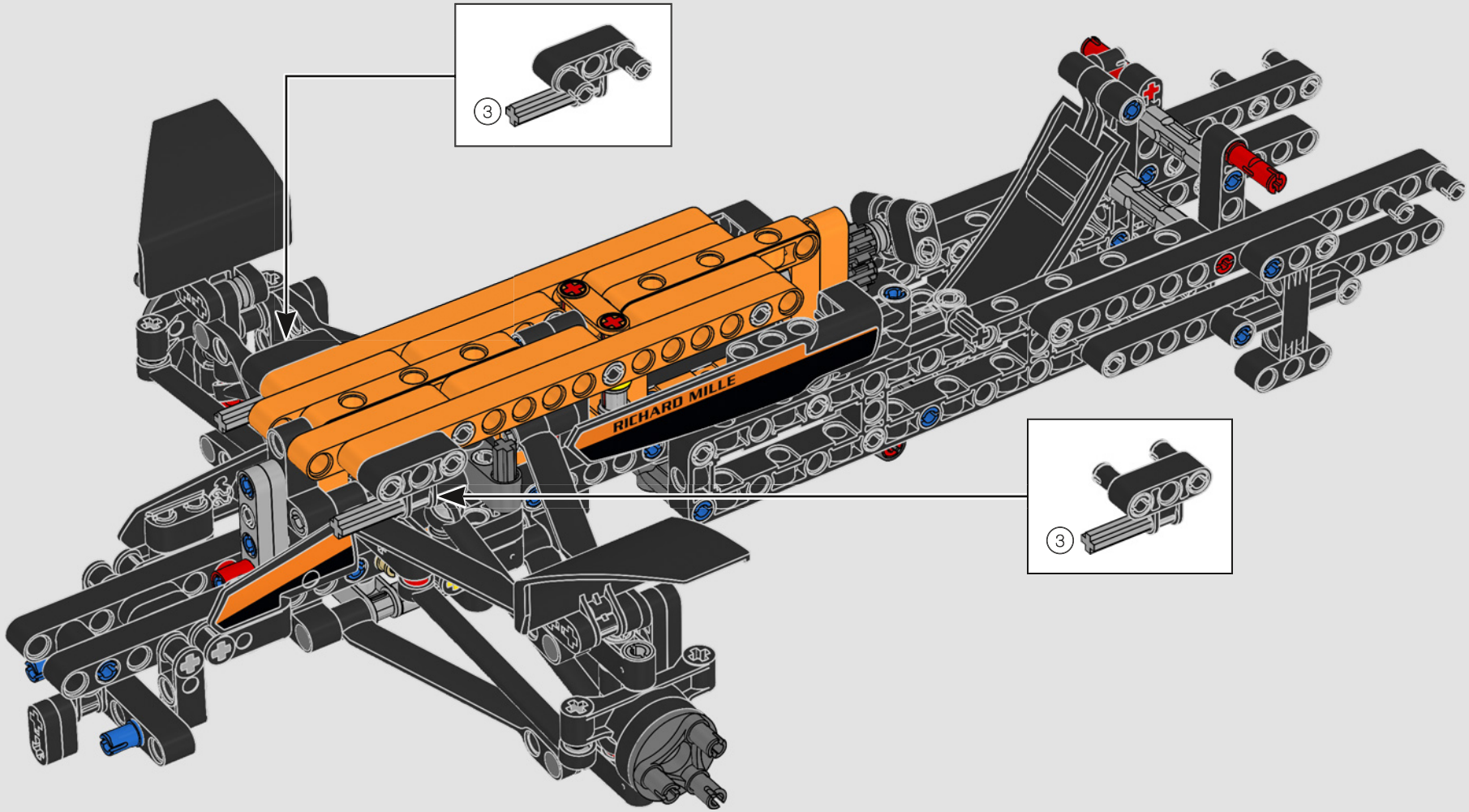

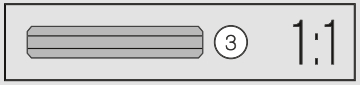

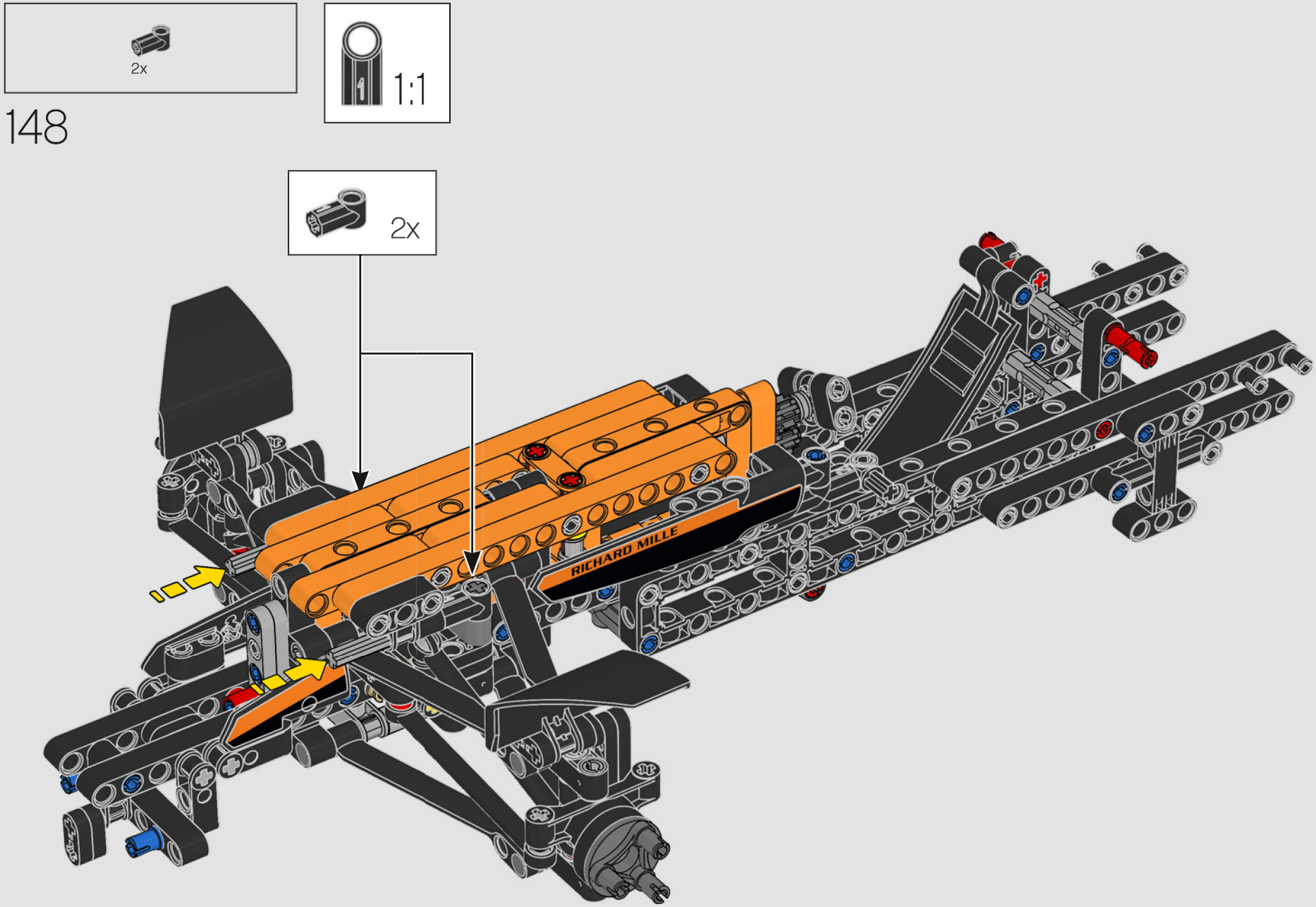
2x
1:1
148
2x
RICHARD MILLE

1x

149

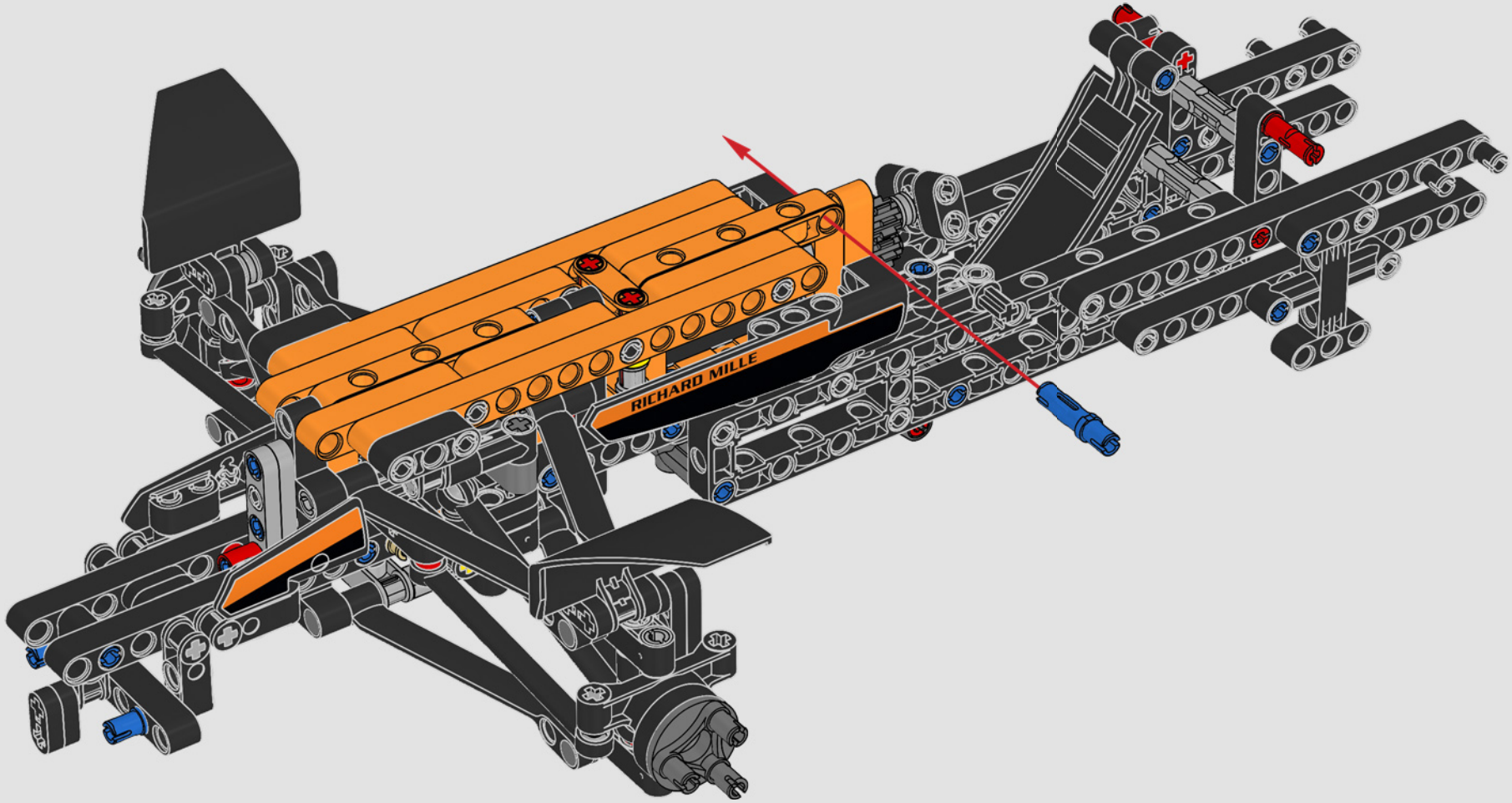

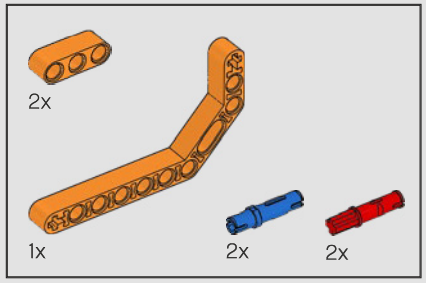

150

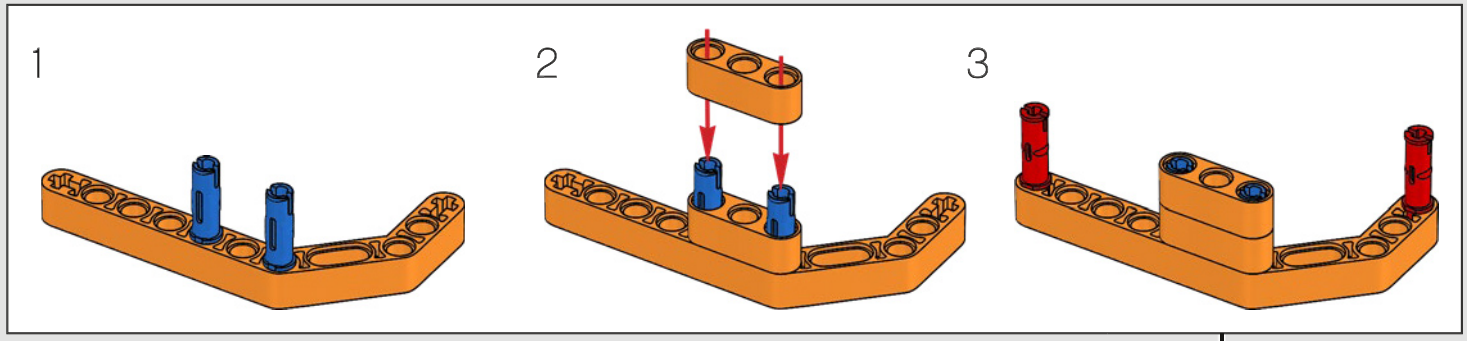

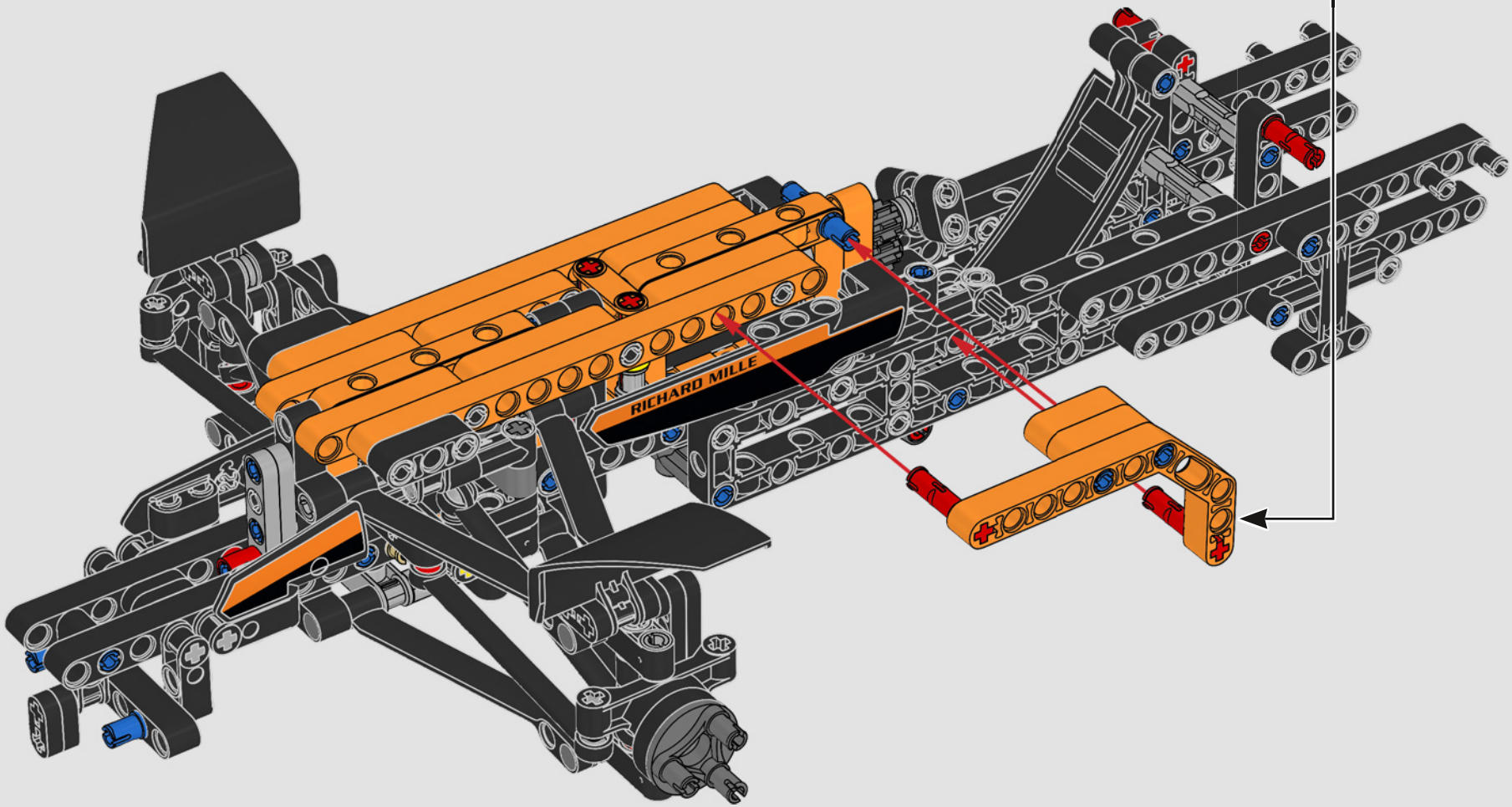

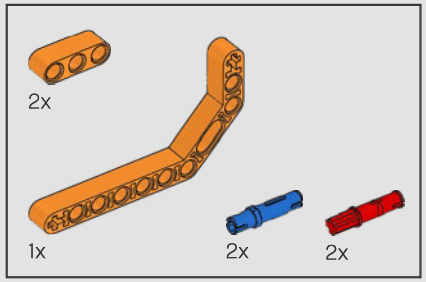

151

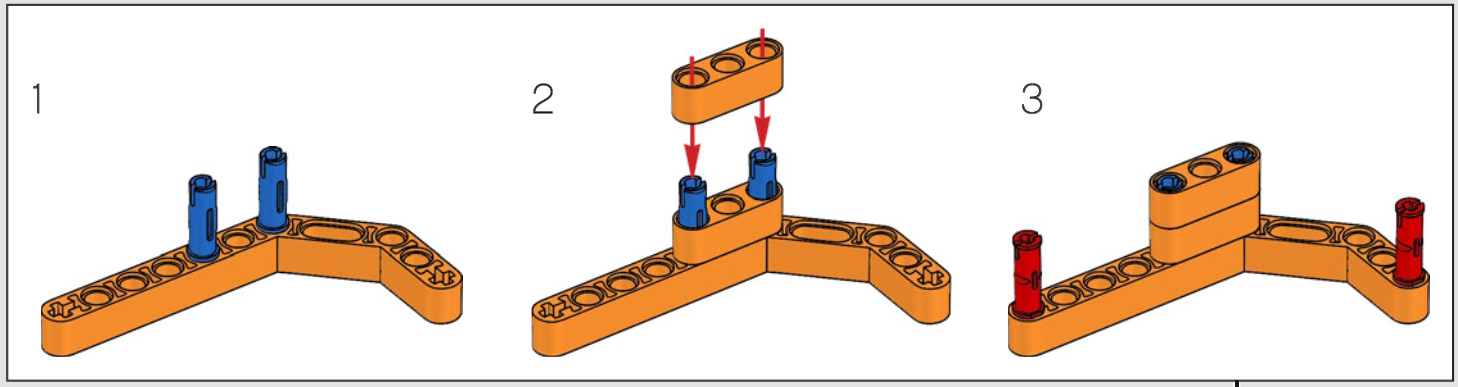

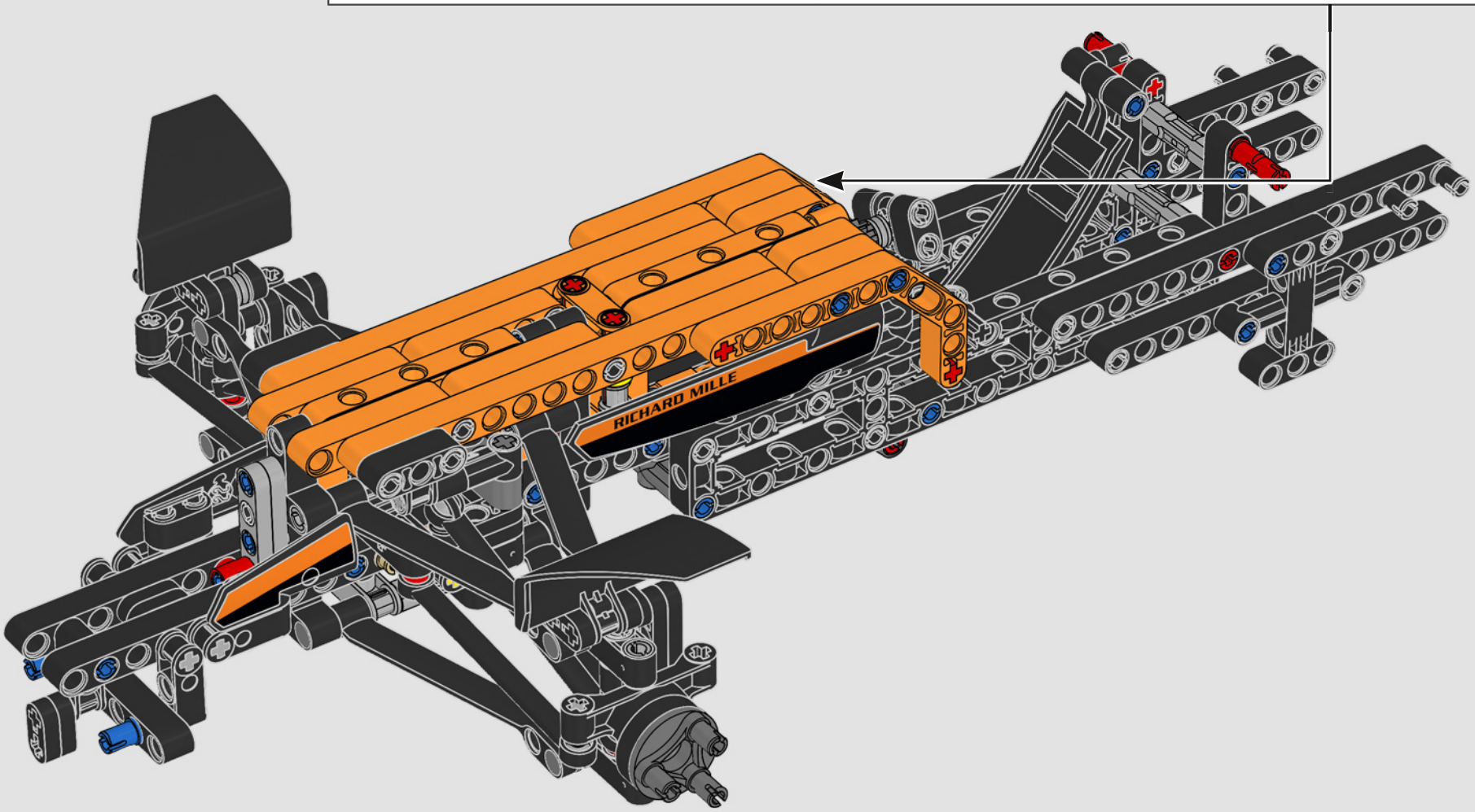

4x

152

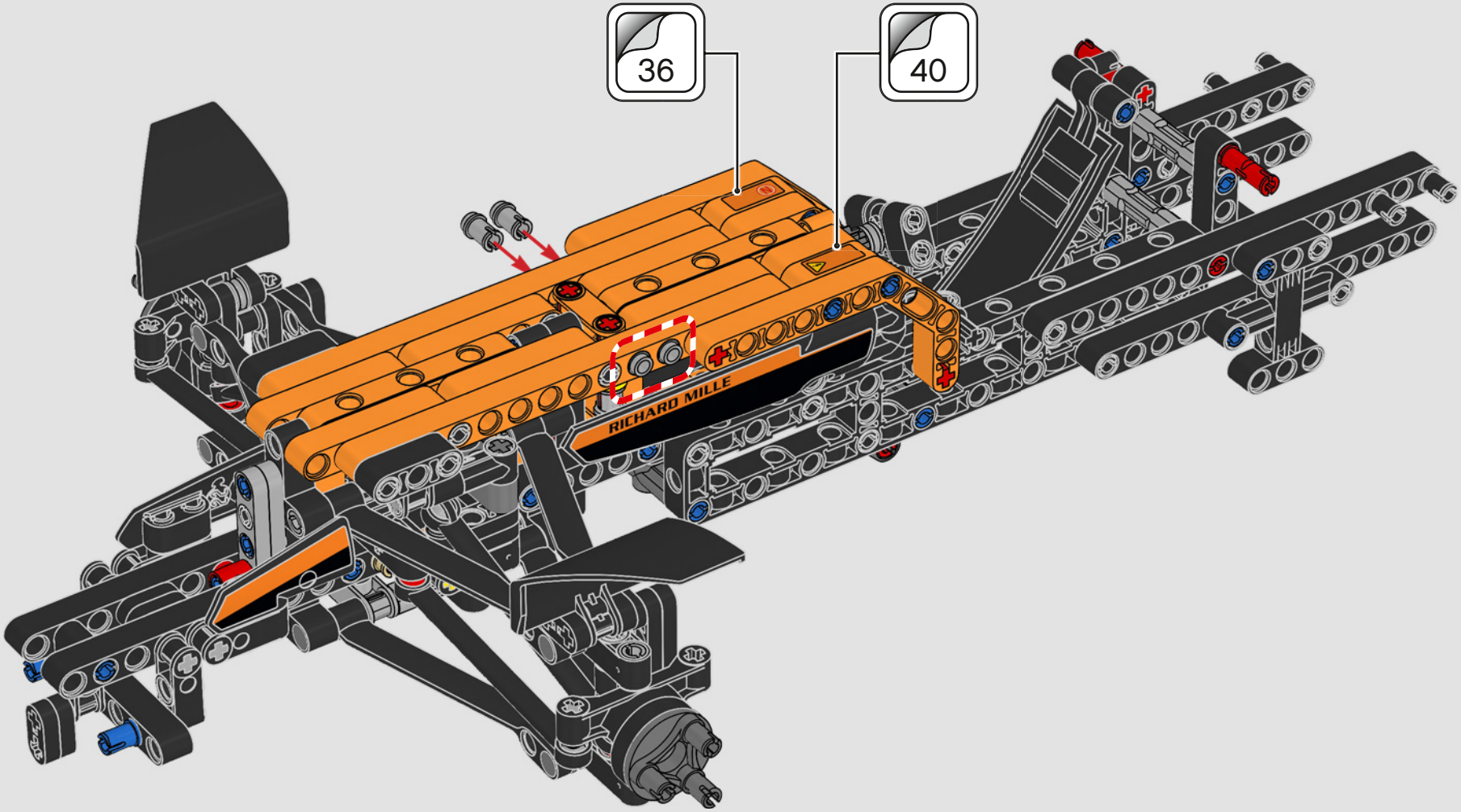

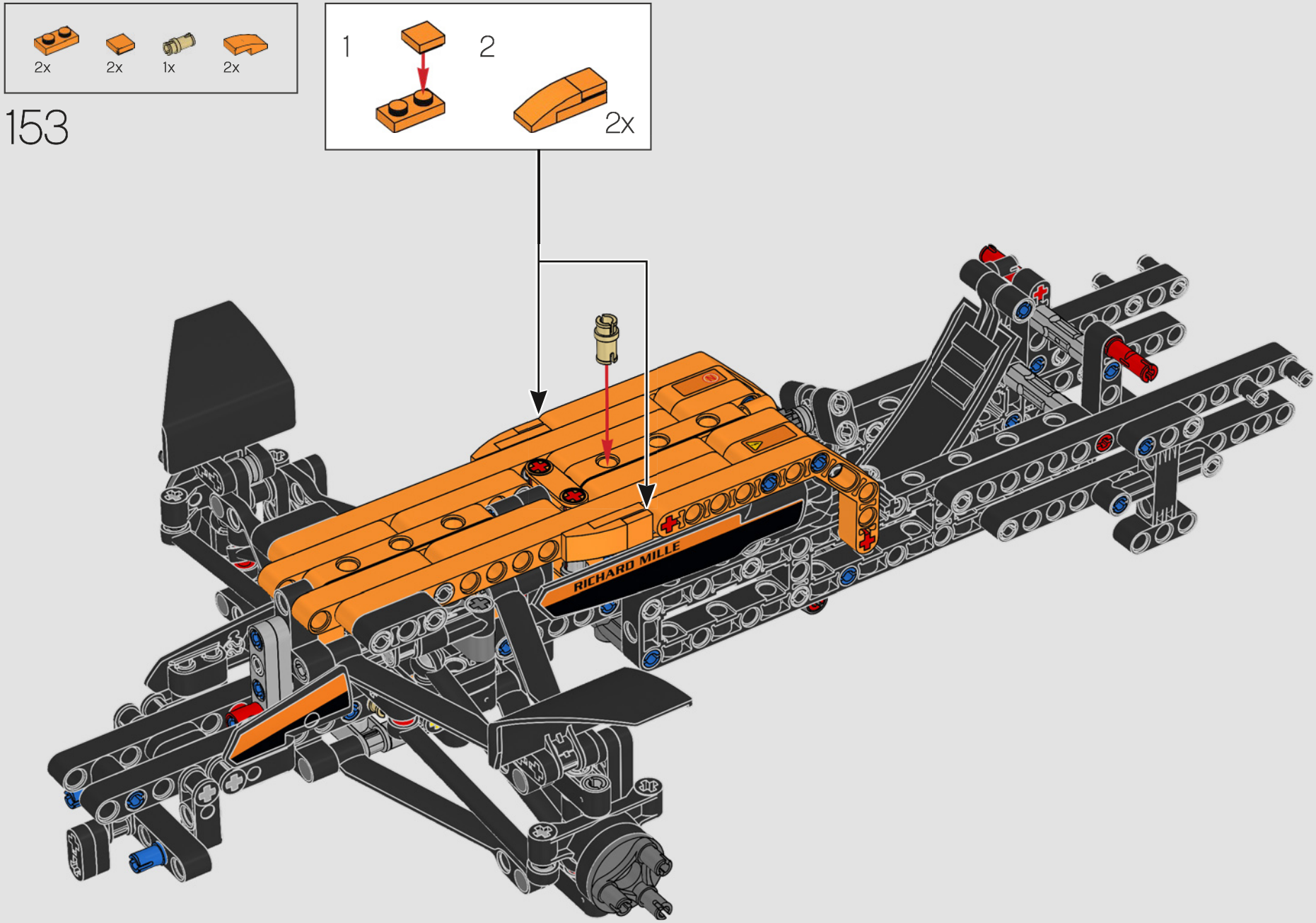
2x
2x
1x
2x
153
1
2
2x
RICHARD MILLE

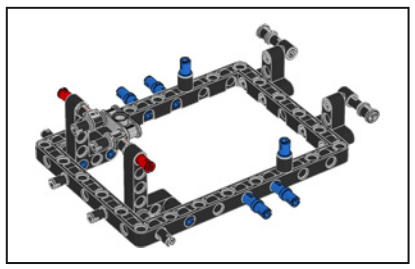

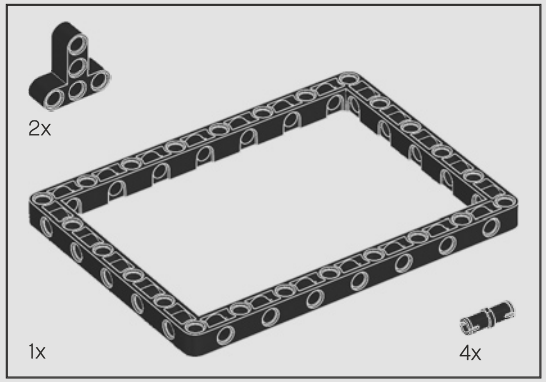

154

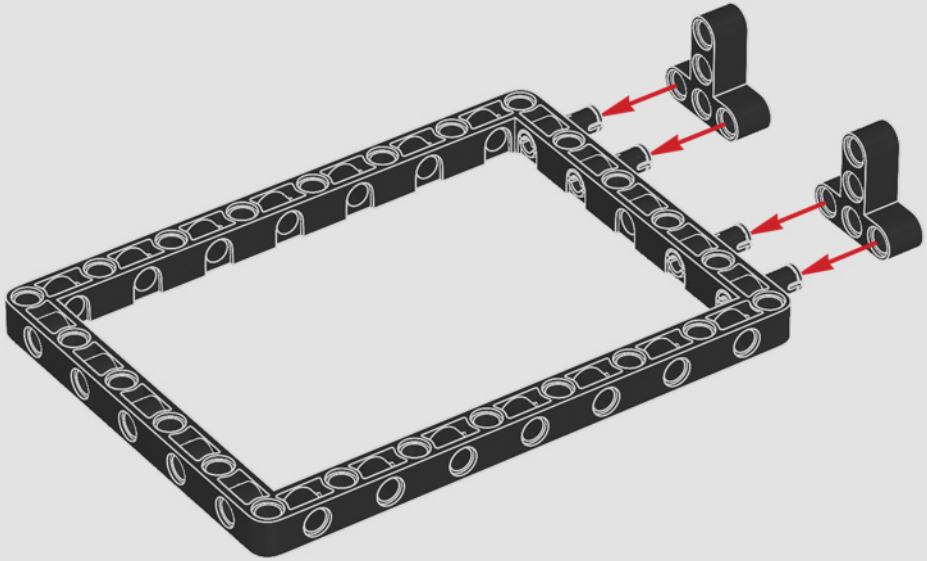

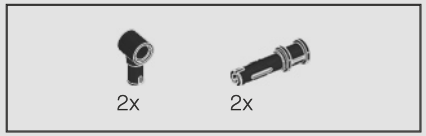

155

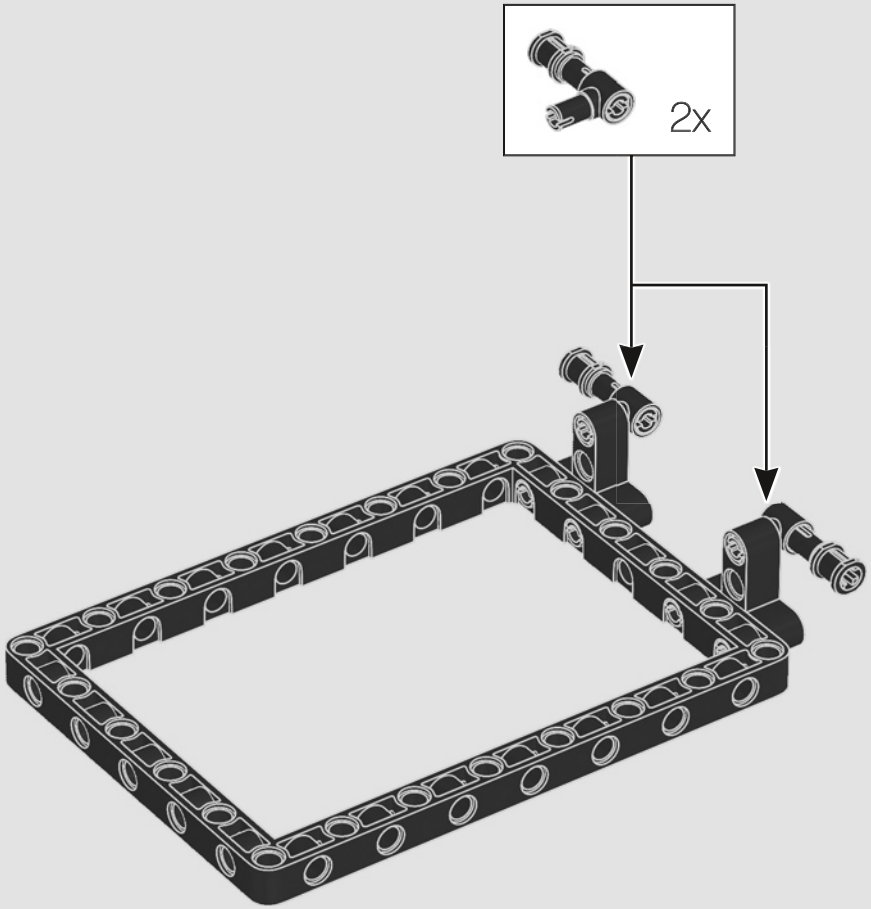

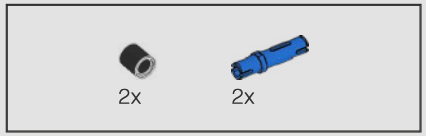

156

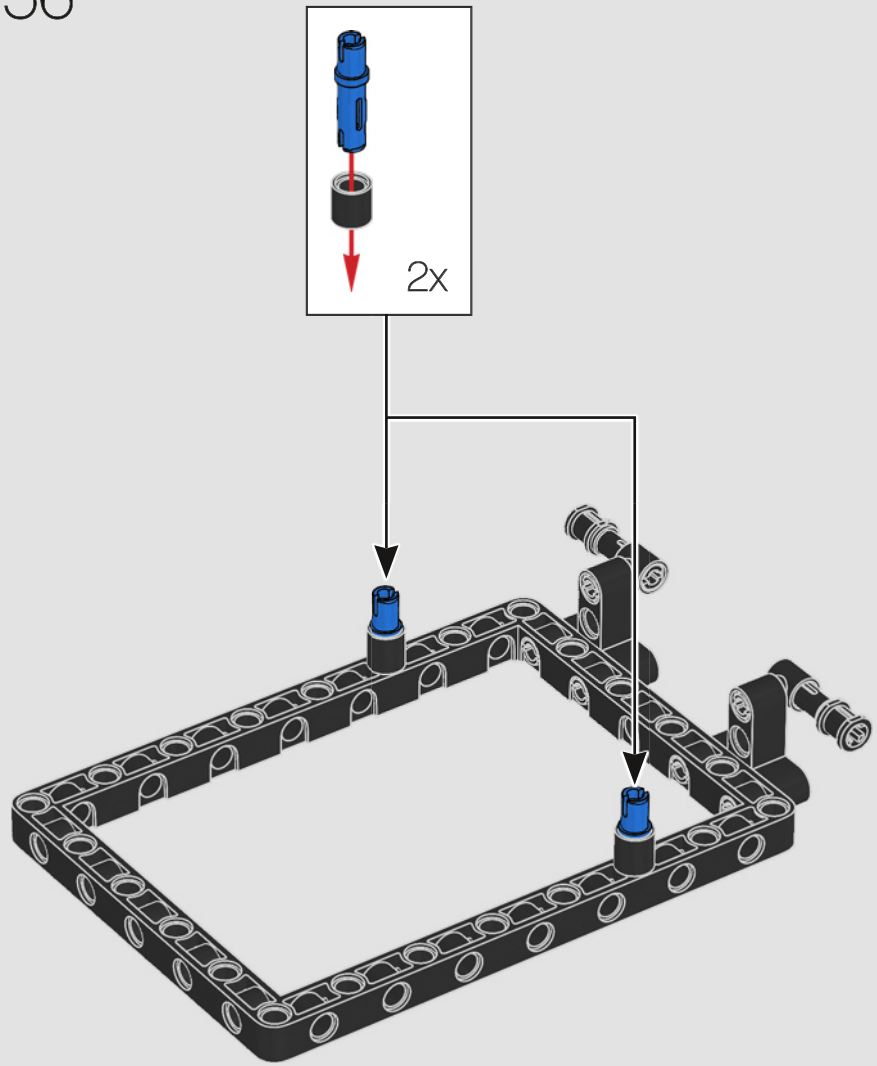

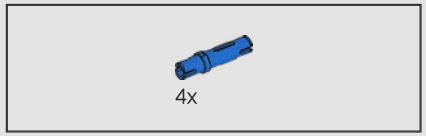

157

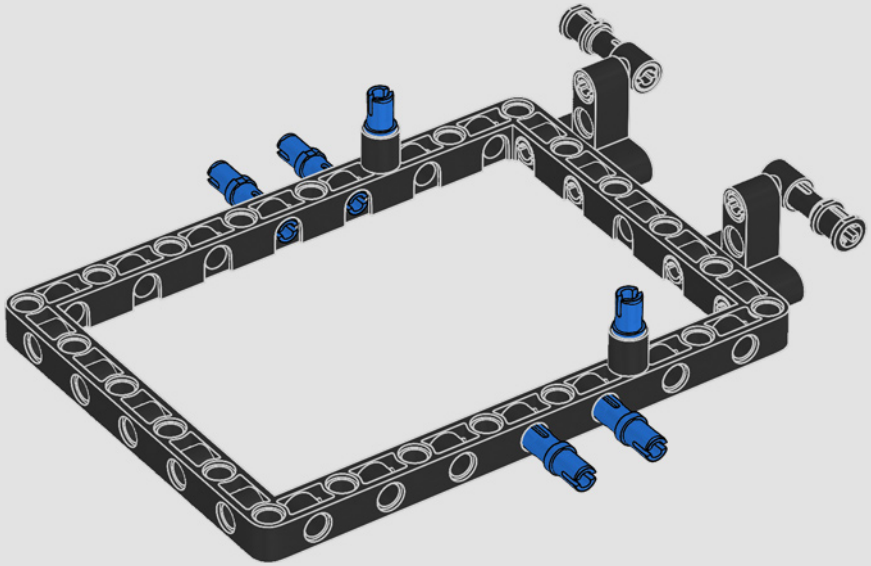

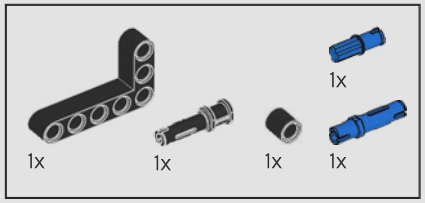

158

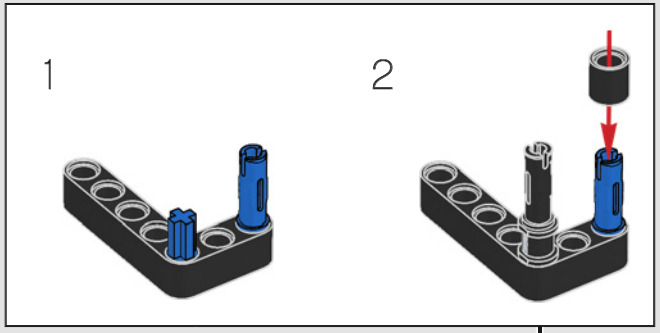

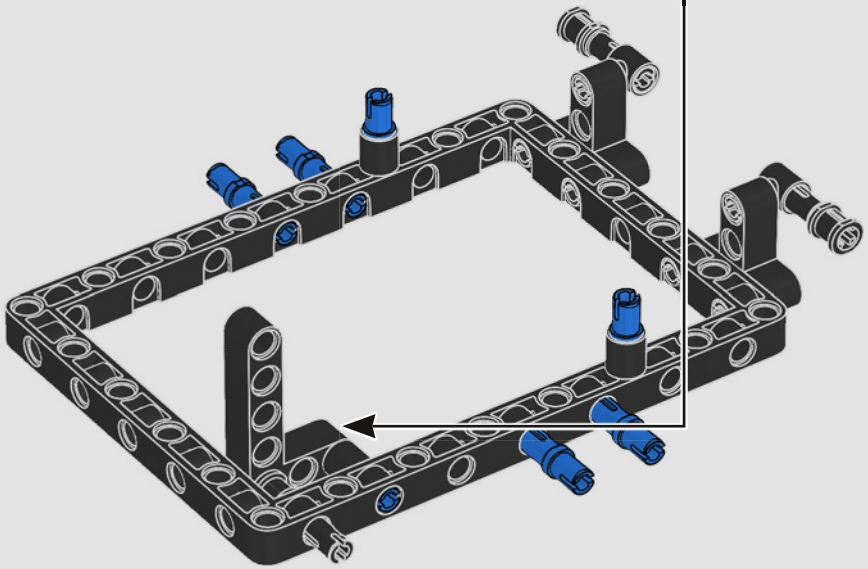

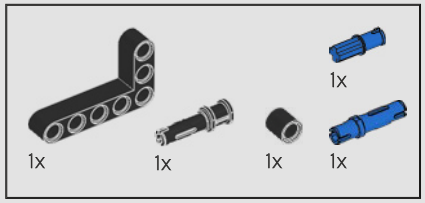

159

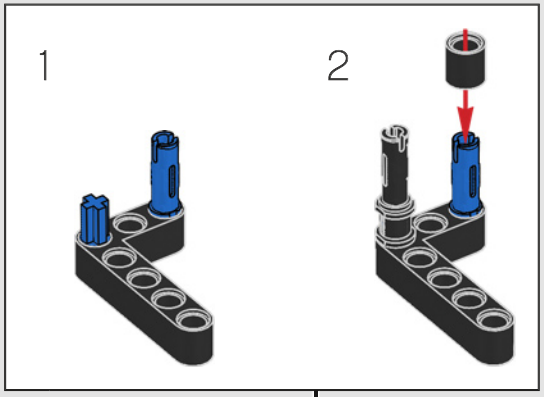

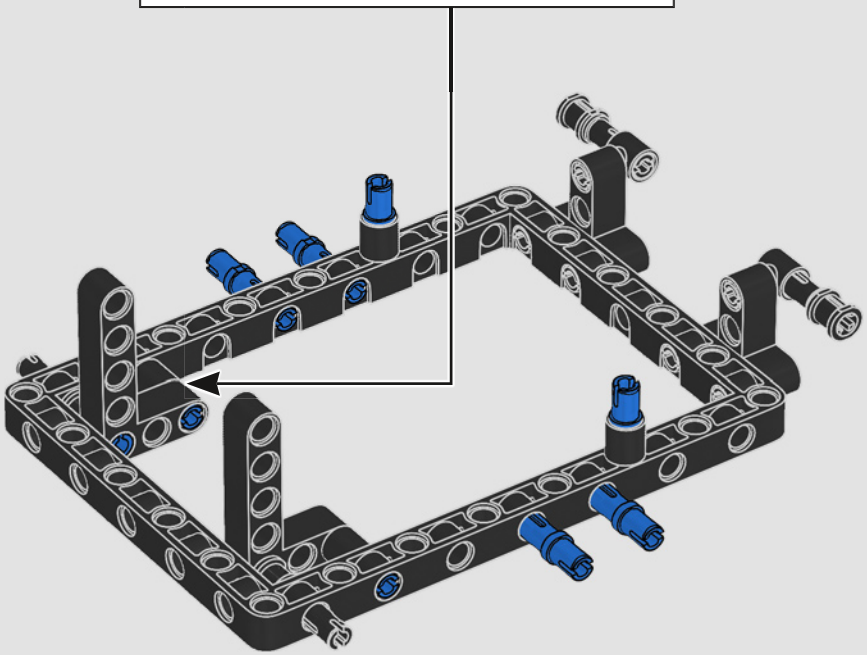

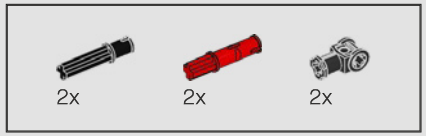

160

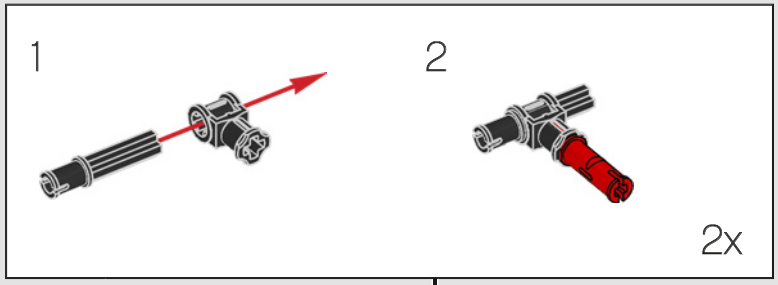

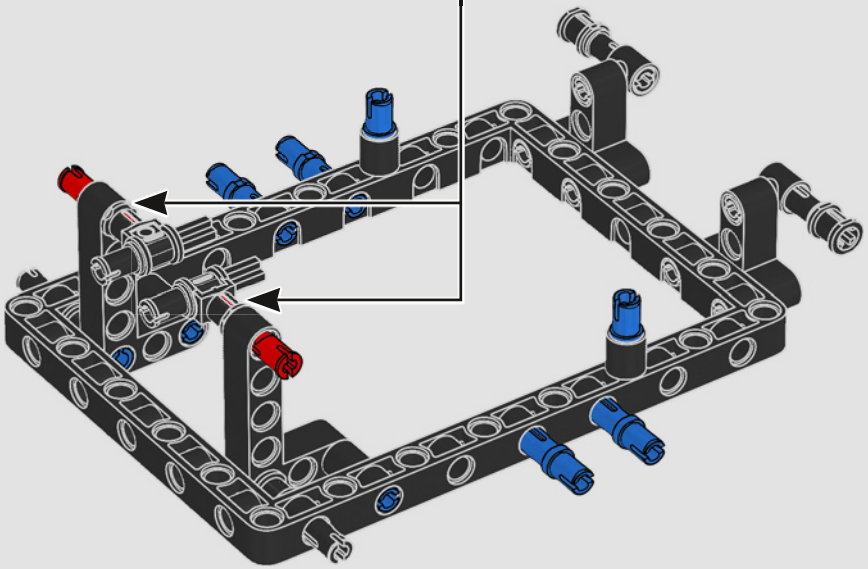

1x

161

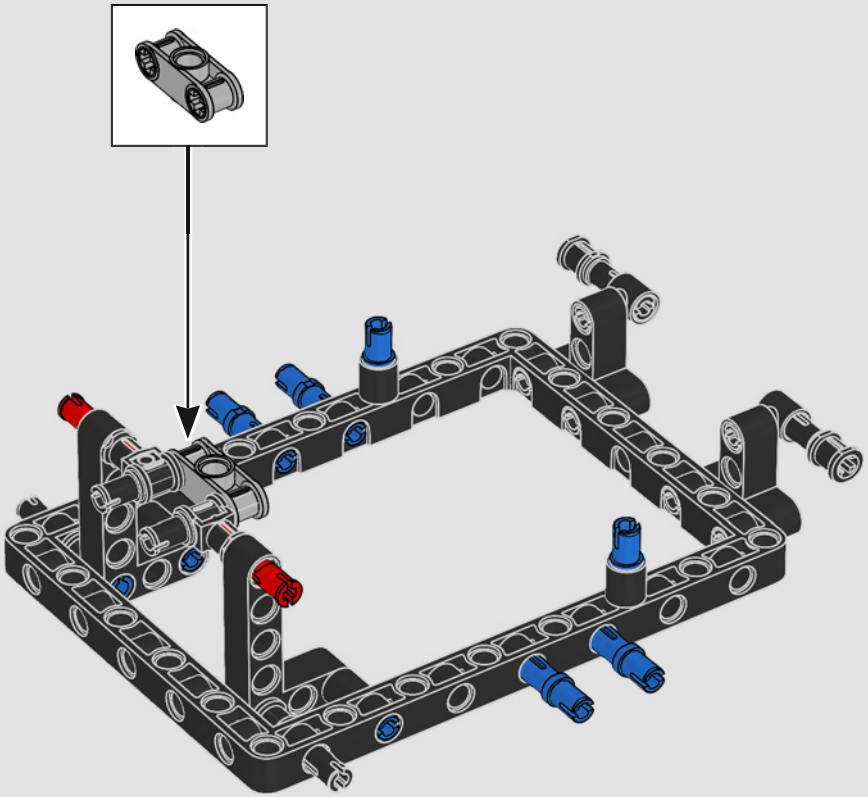

162

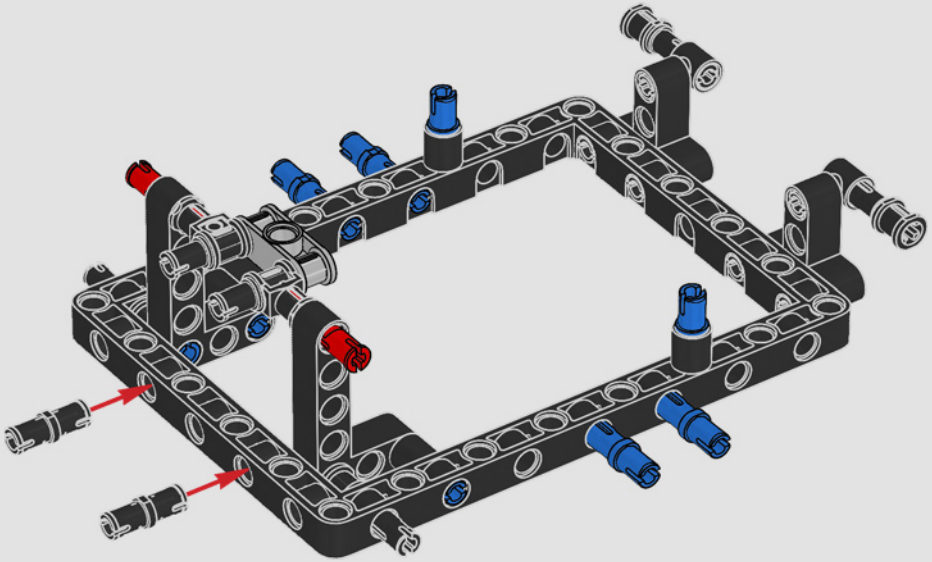

163

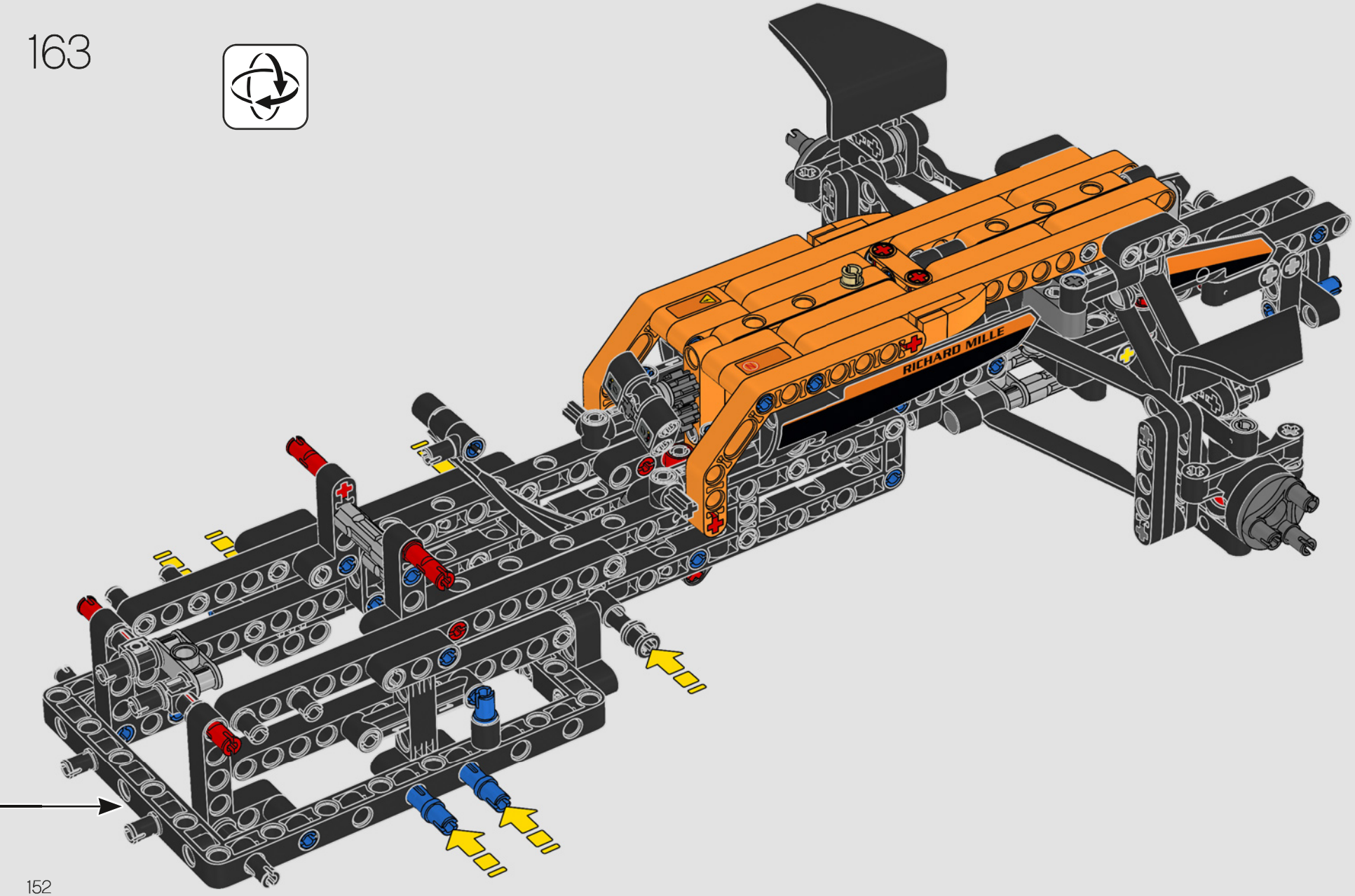

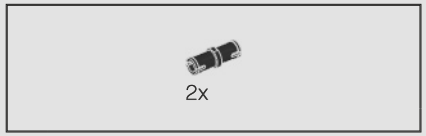

164

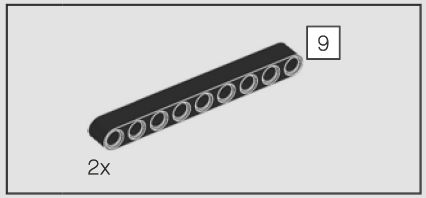

165

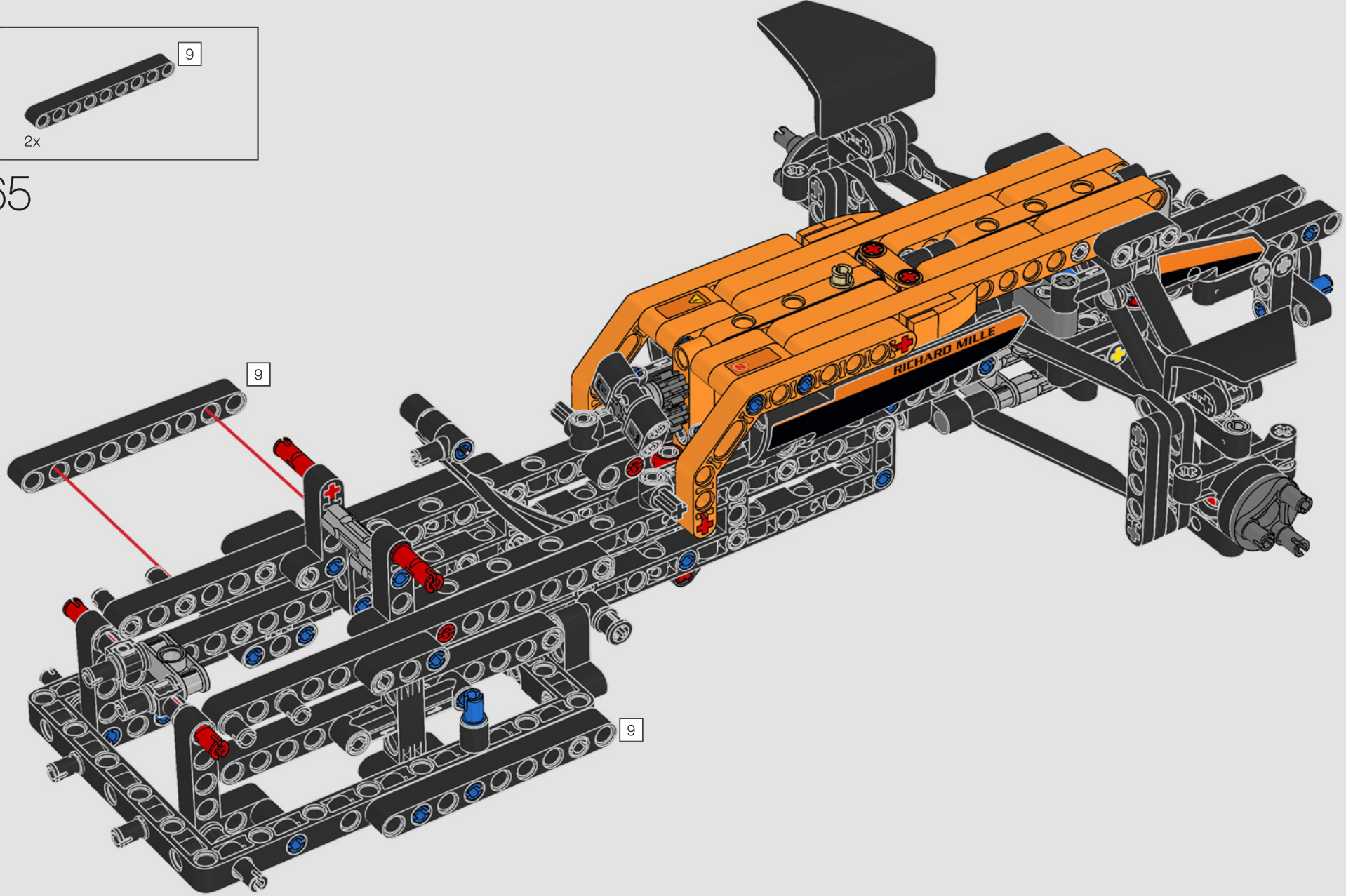

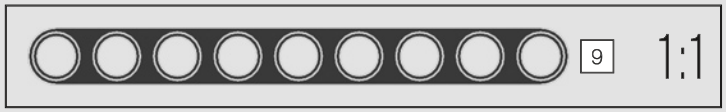

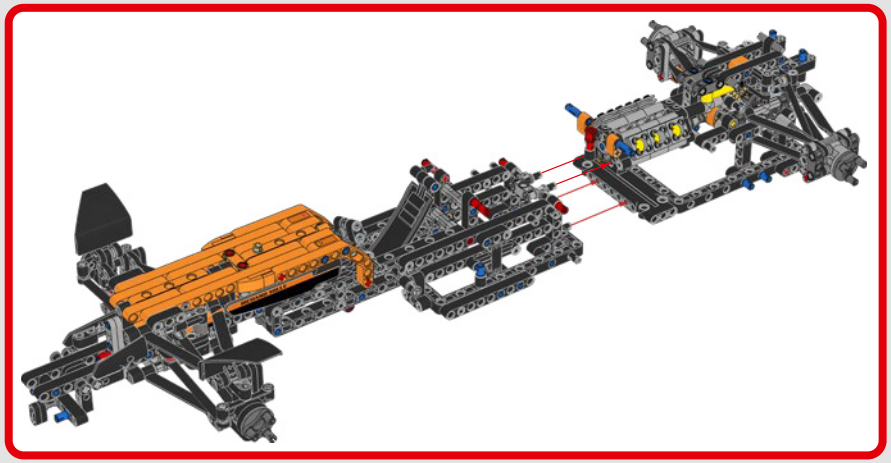

166

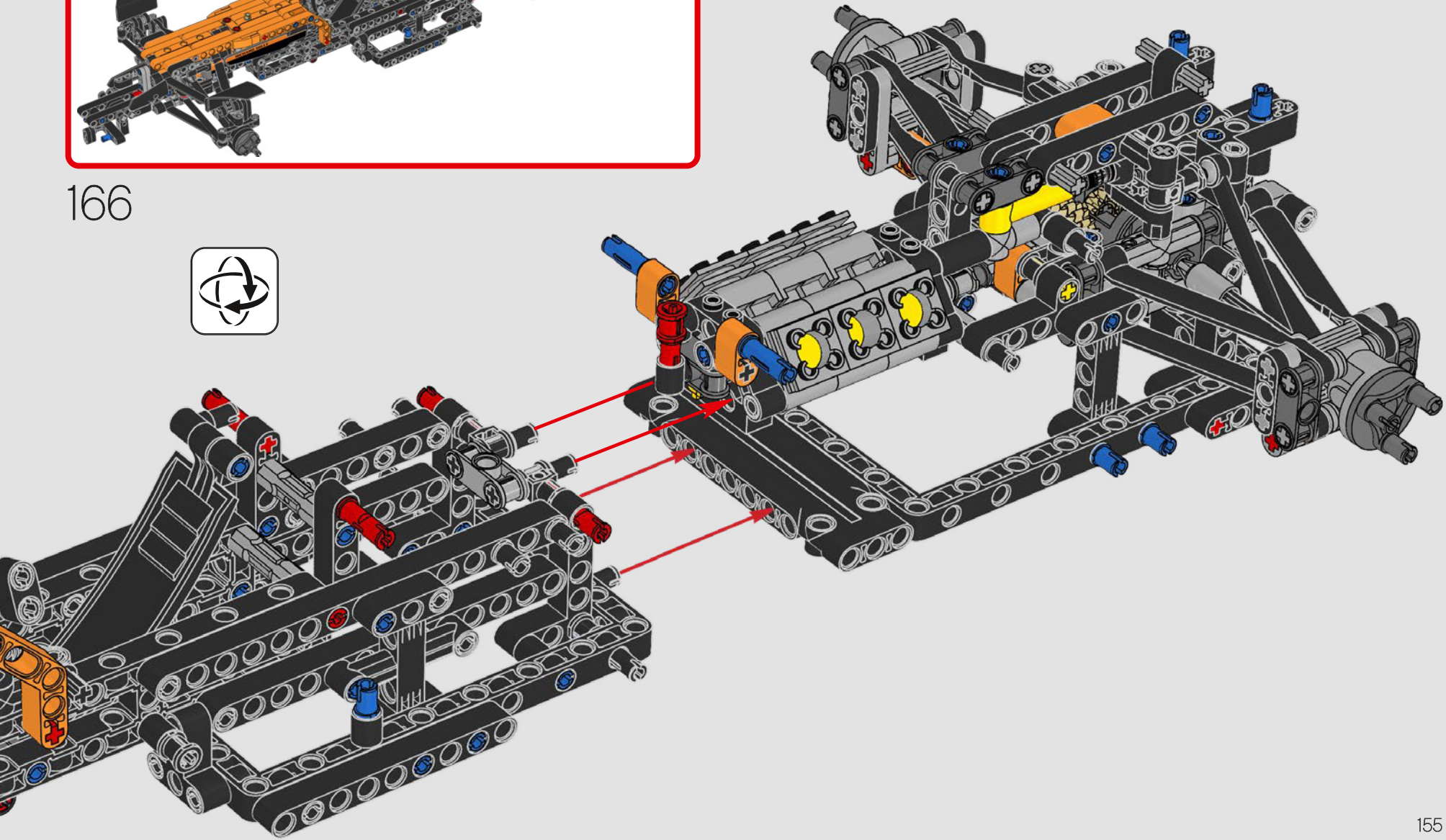

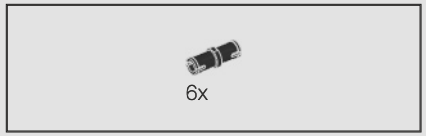

167

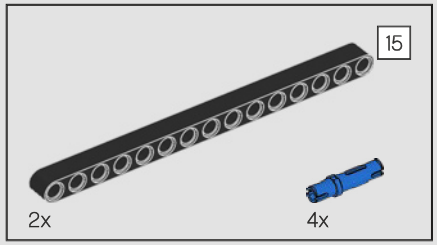

168

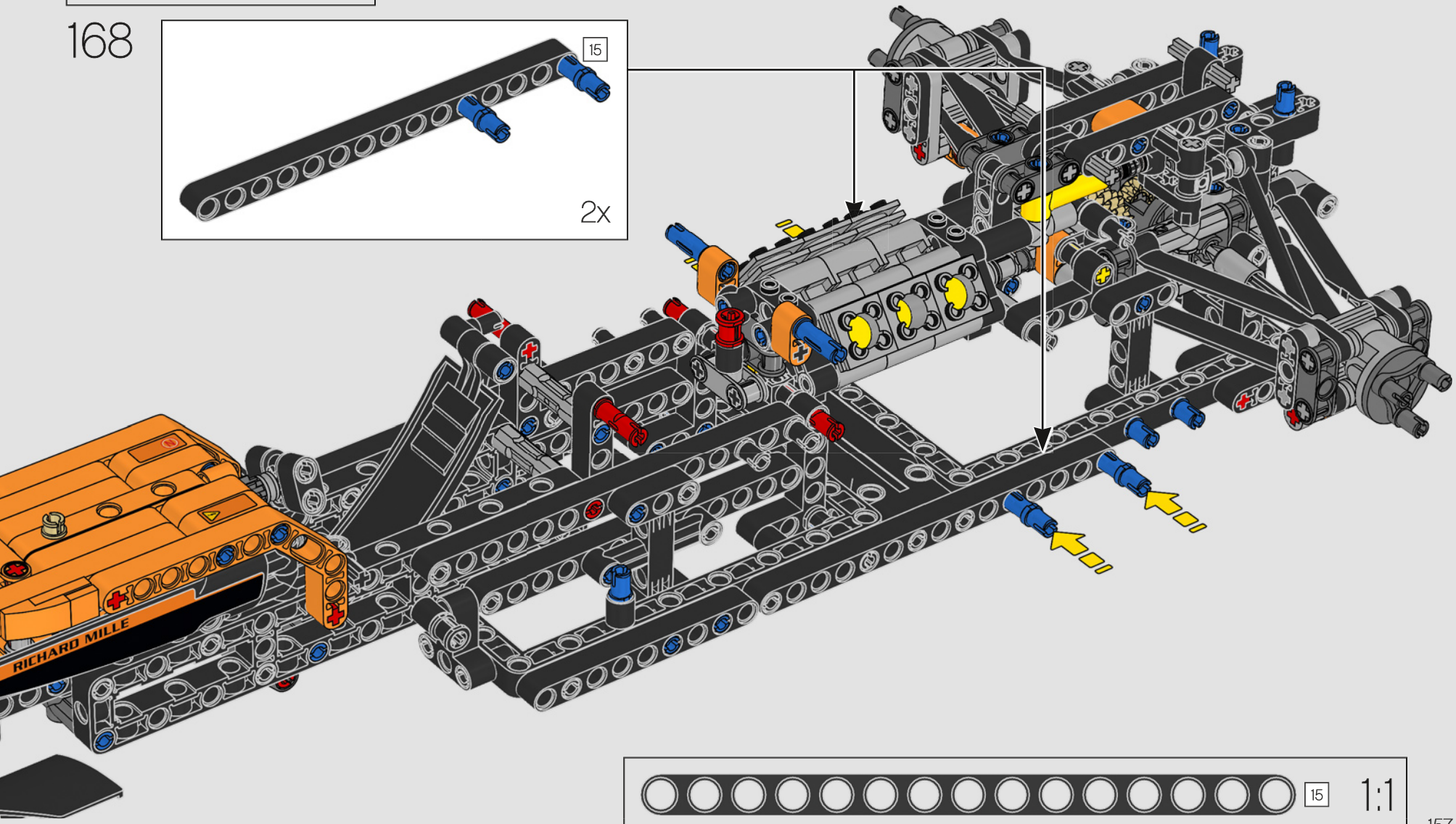

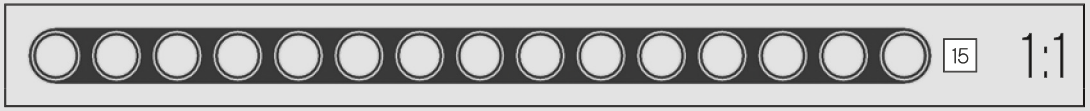

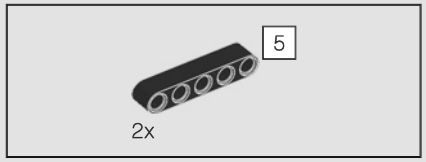

169

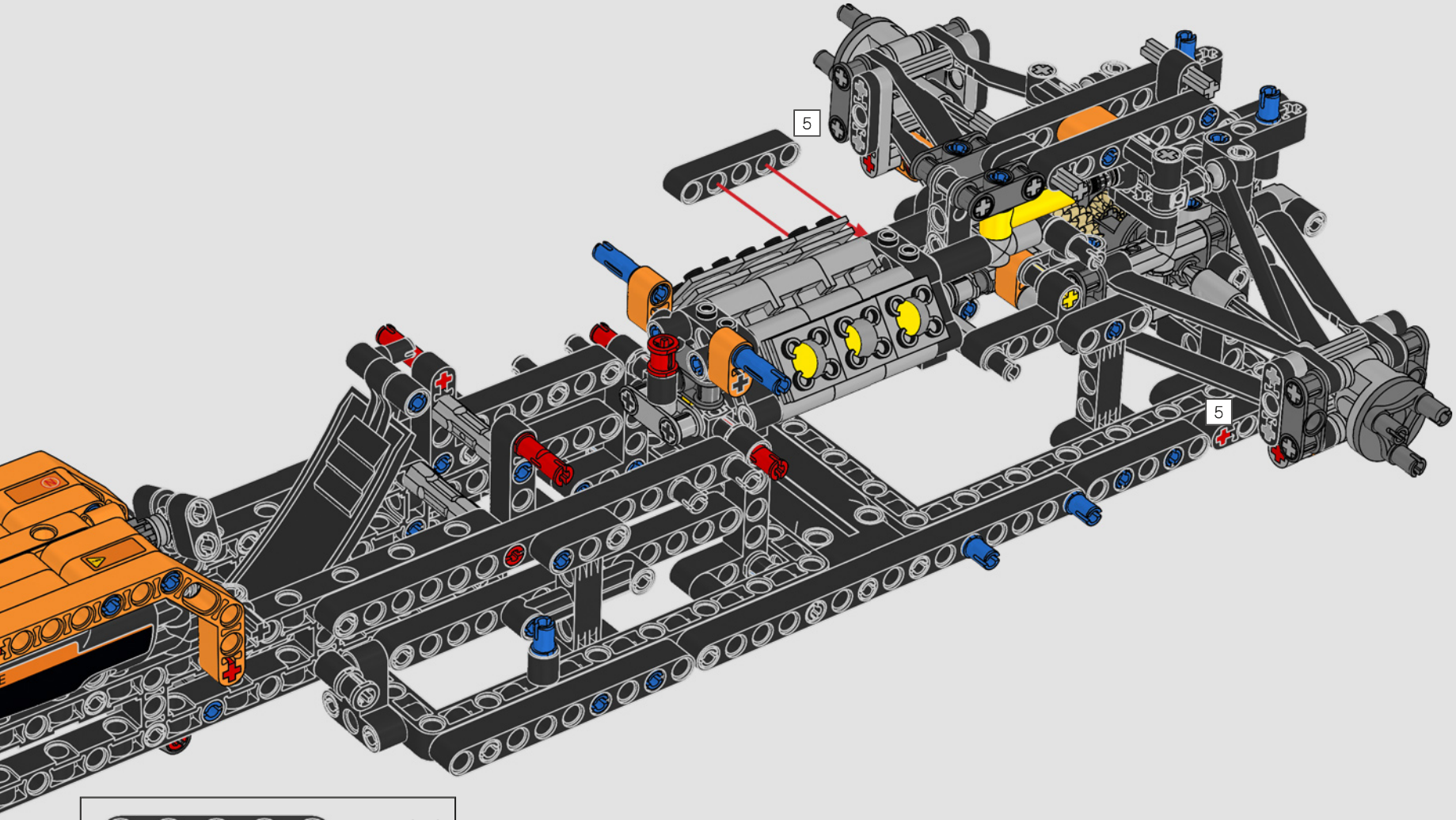

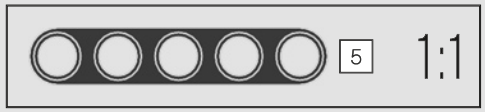

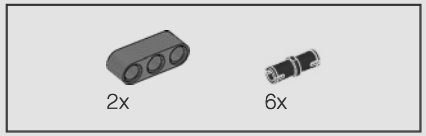

170

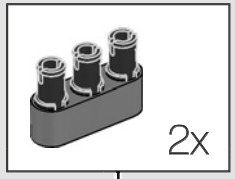

171

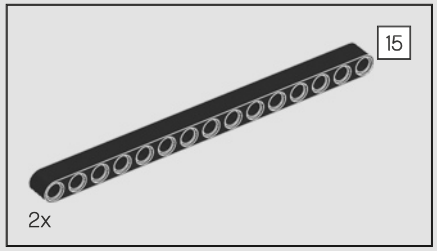

172

15

15

RICHARD MILLE

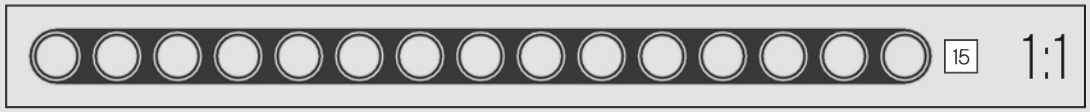

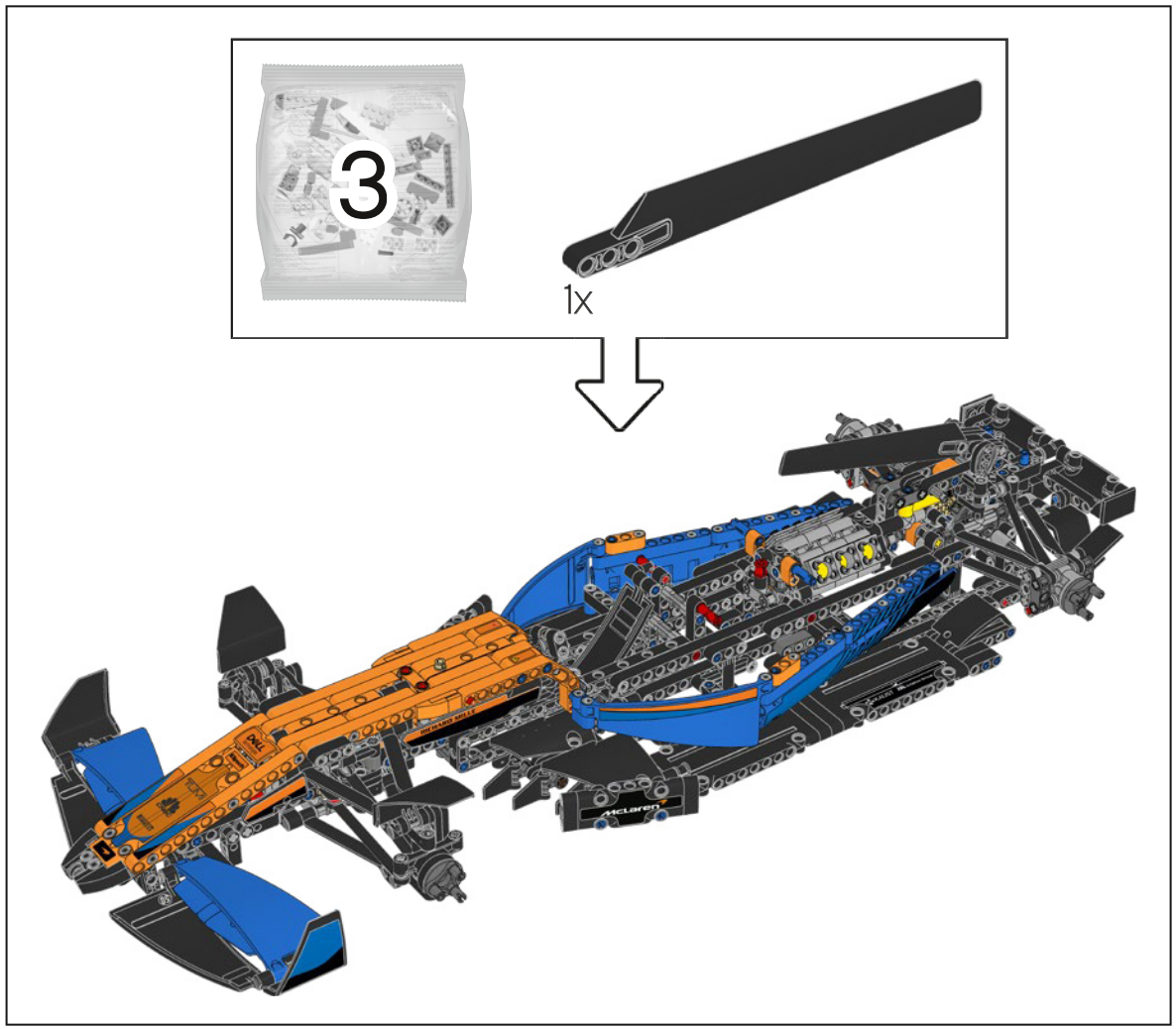
3
1x

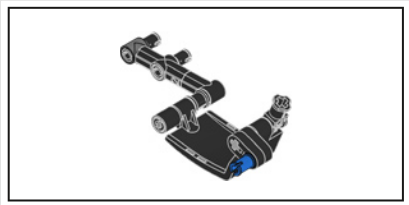

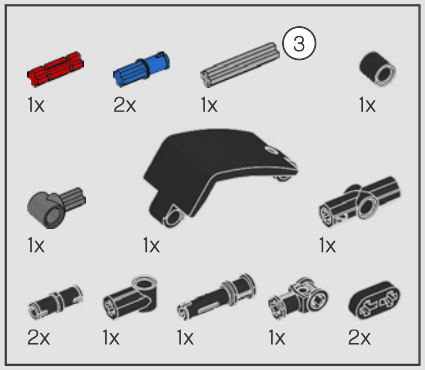

173

1

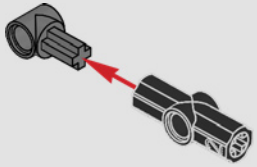

2

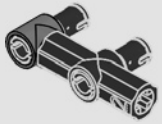

3

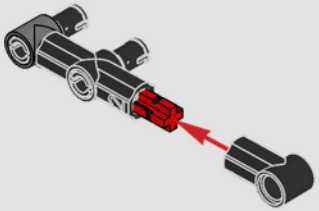

4

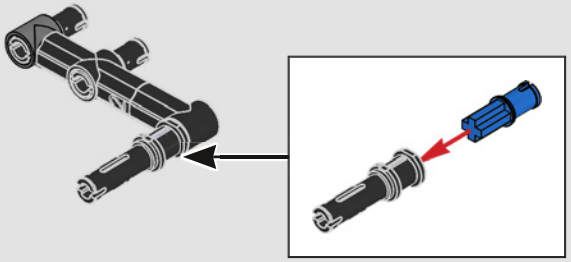

5

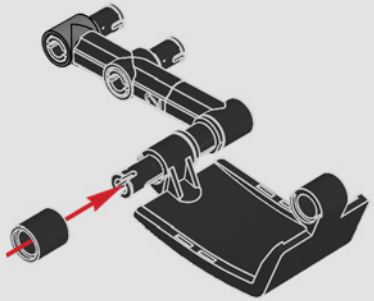

6

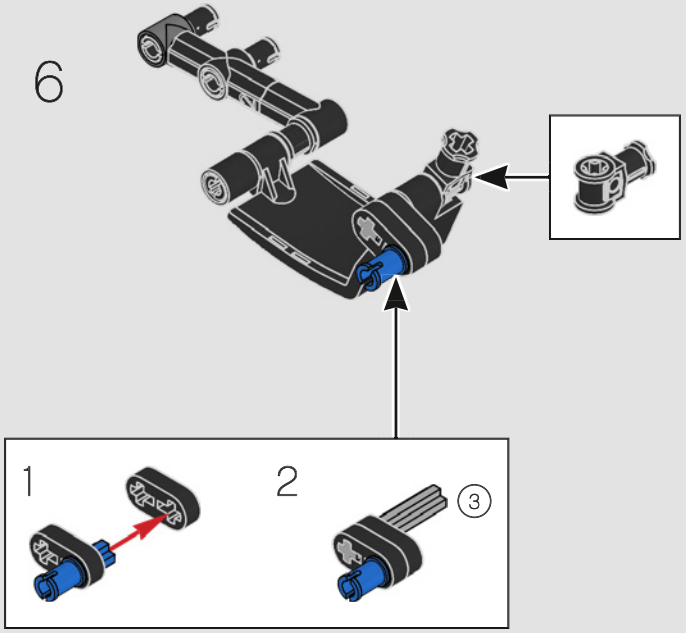

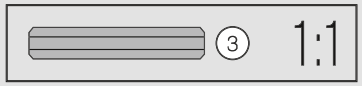

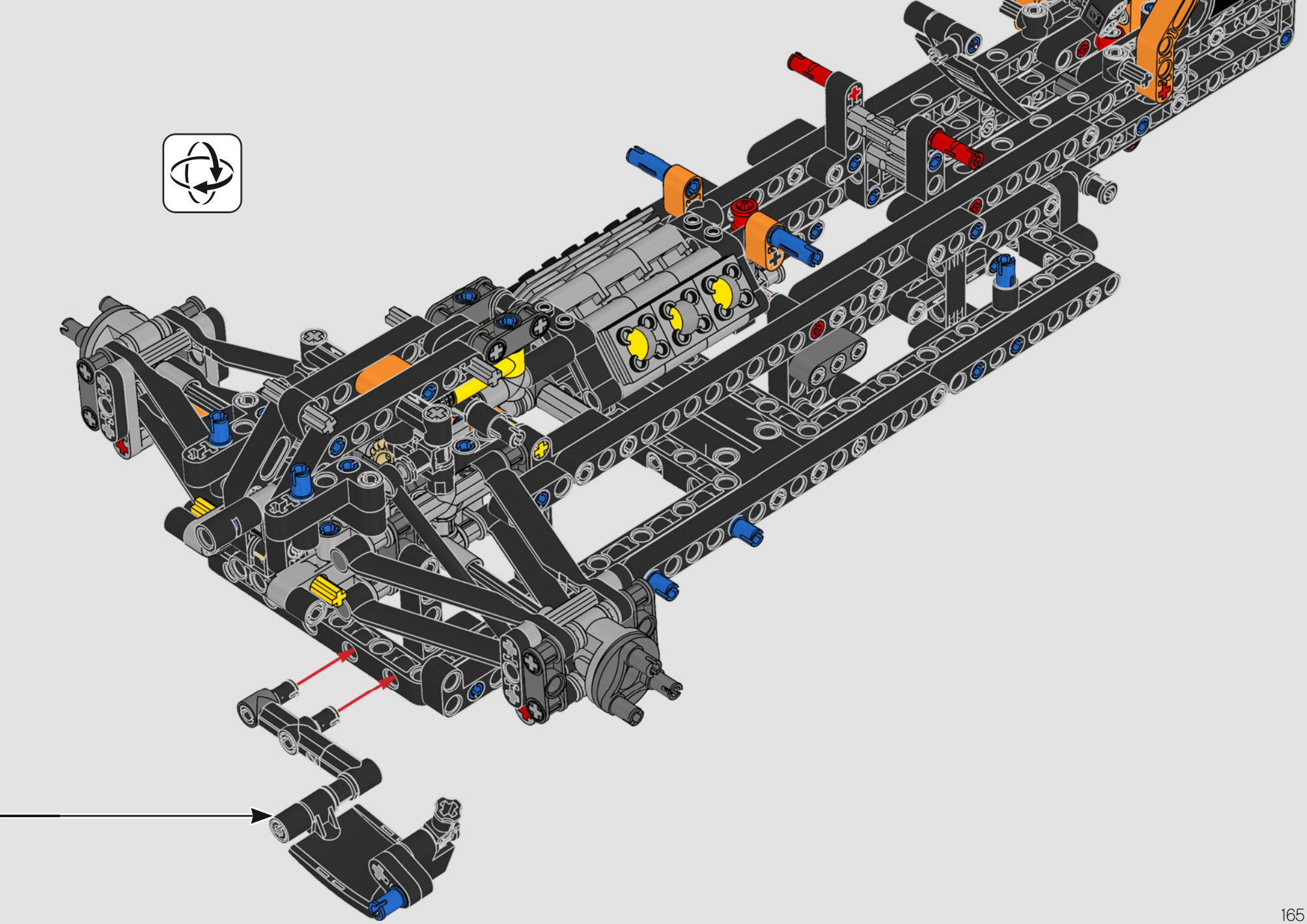

174

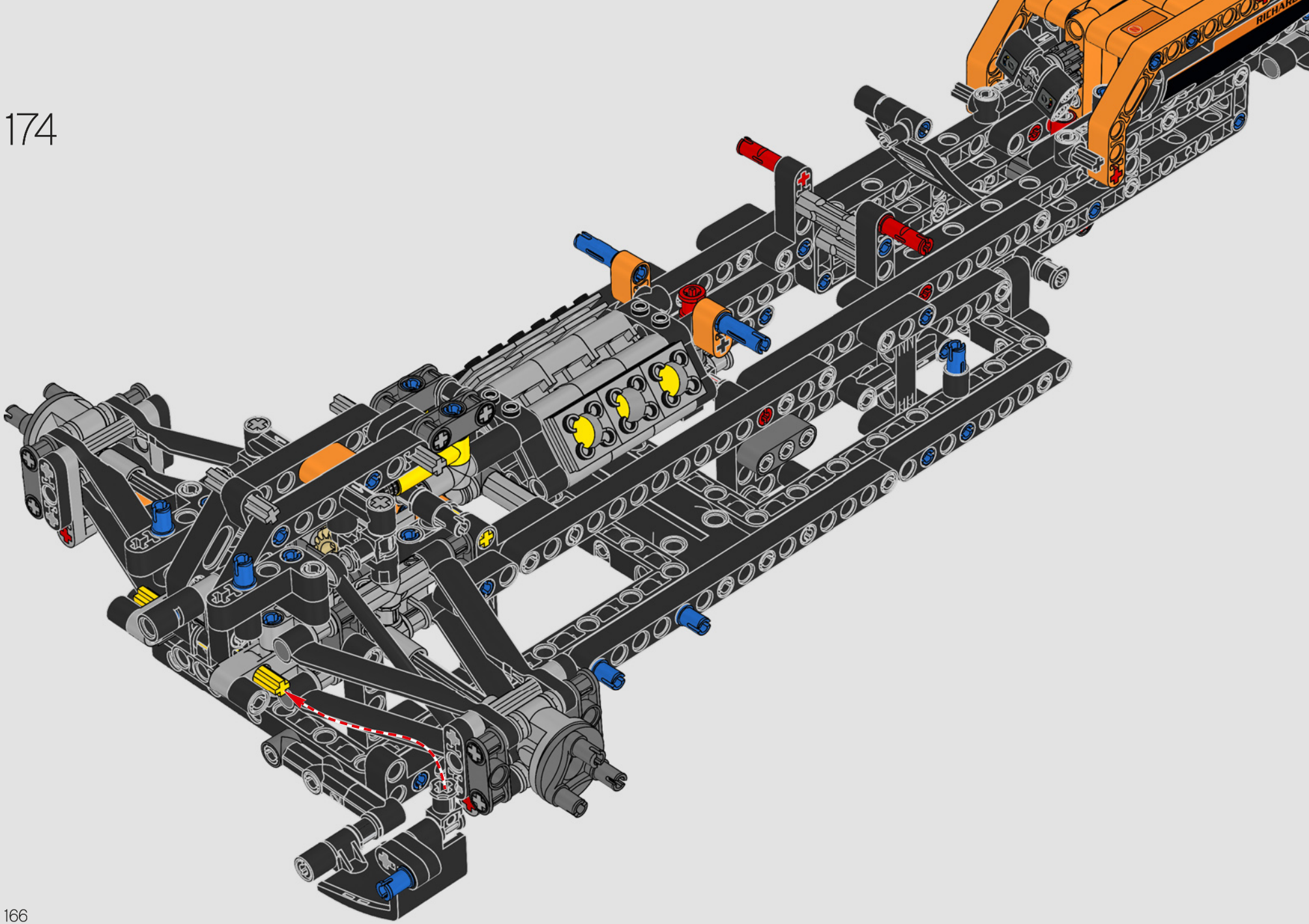

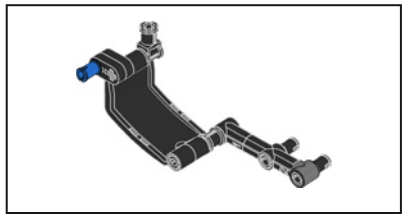

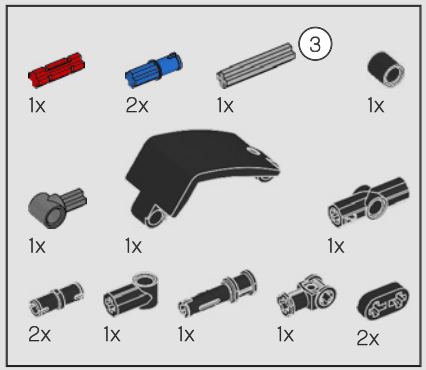

175

1

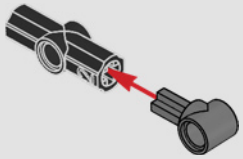

2

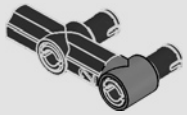

3

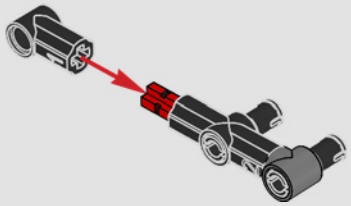

4

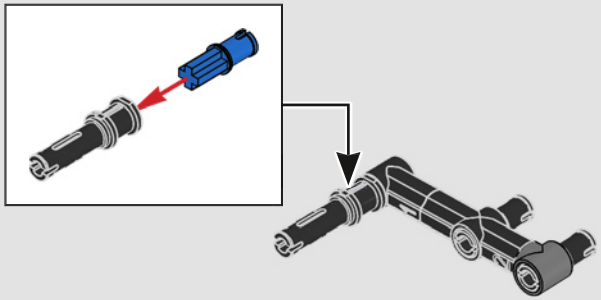

5

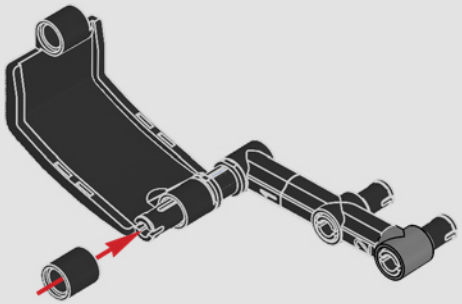

6

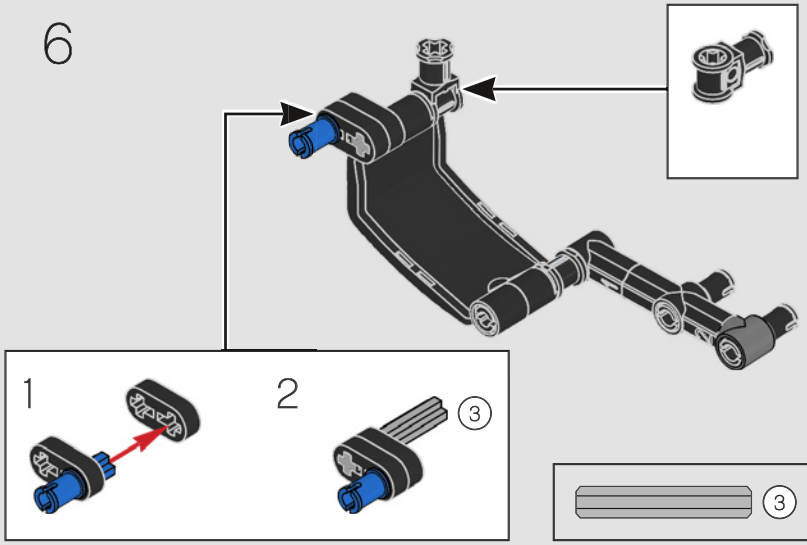

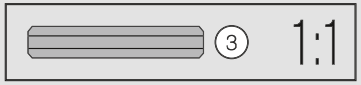

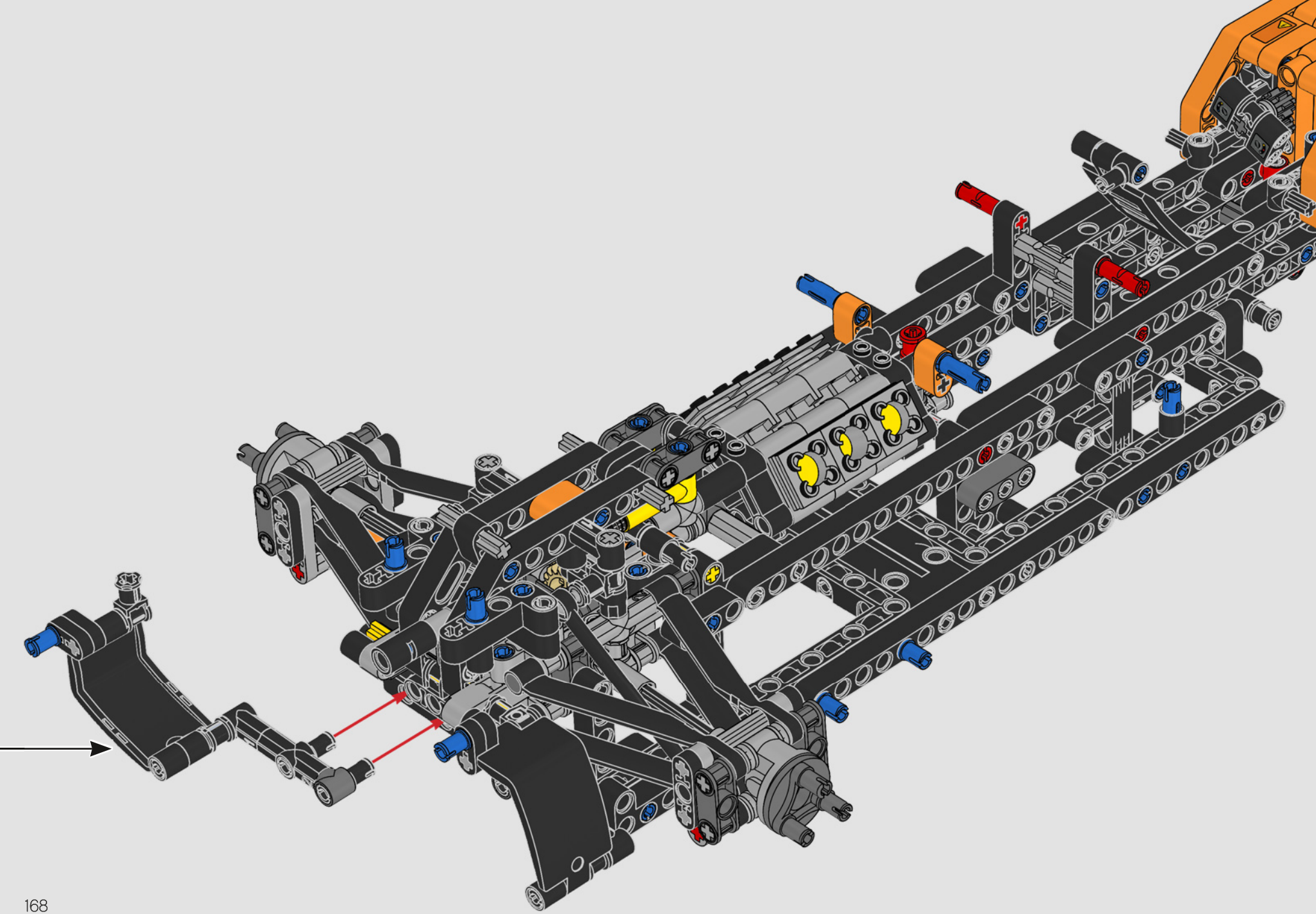

176

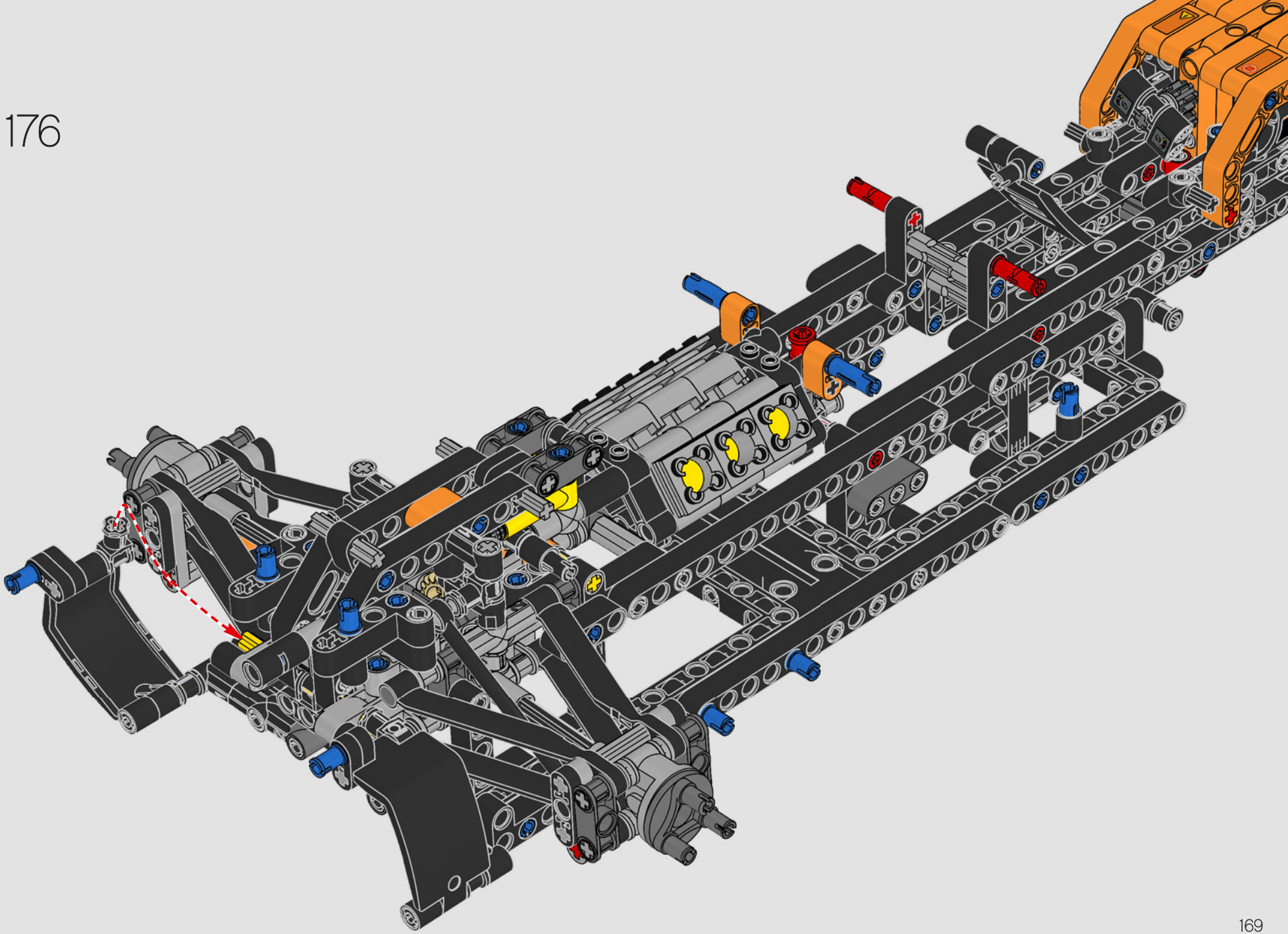

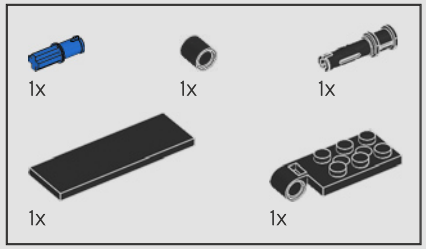

177

1

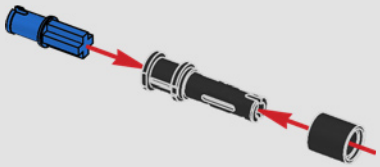

2

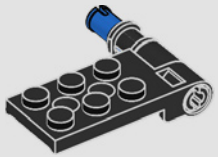

3

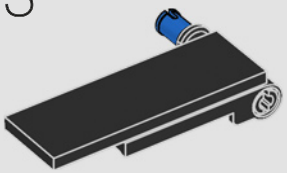

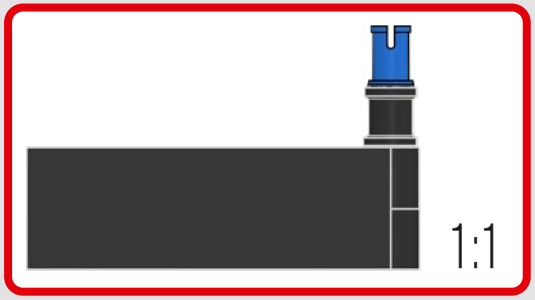

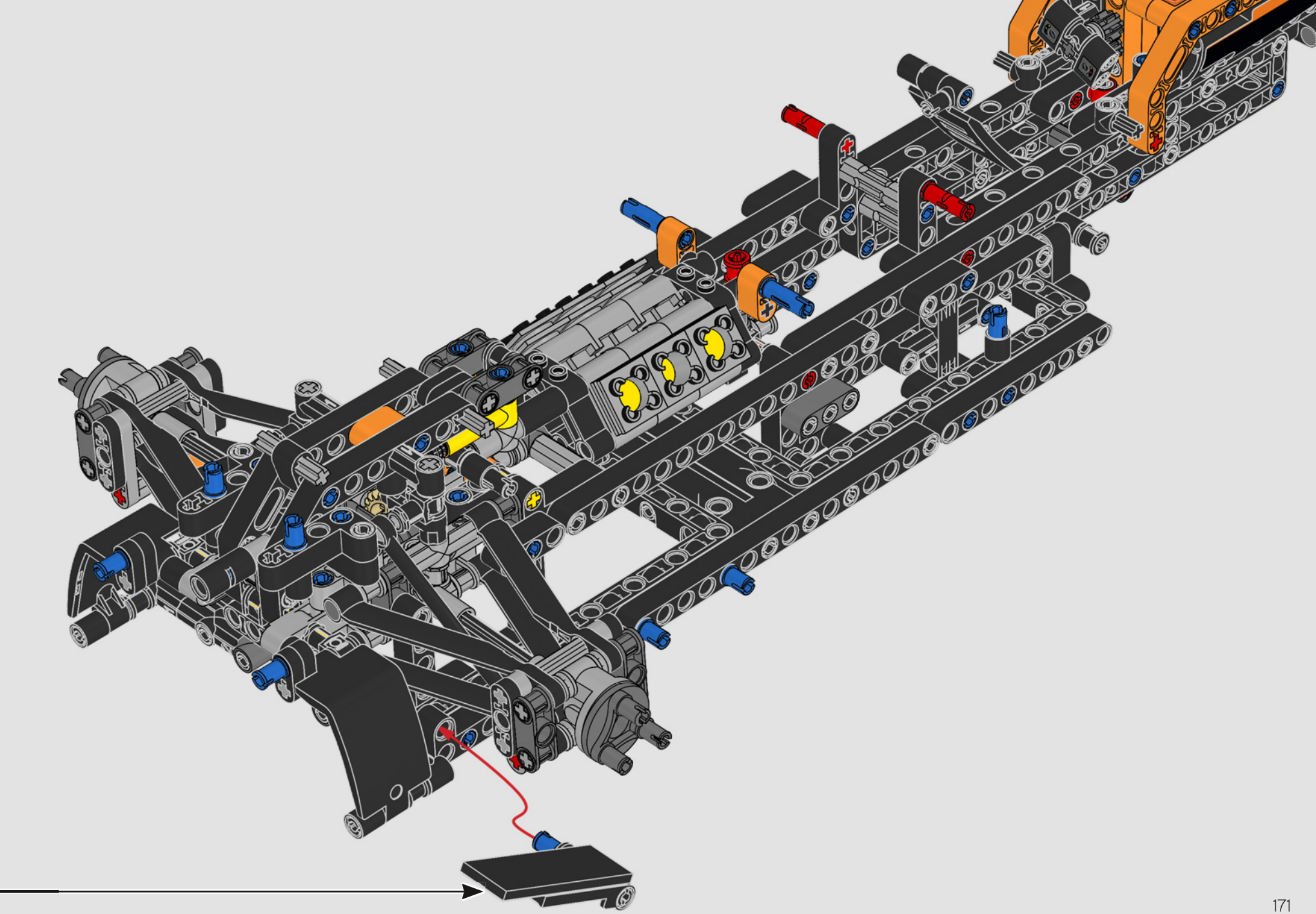

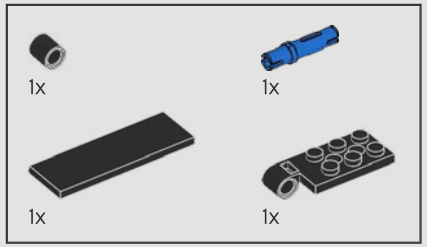

178

1

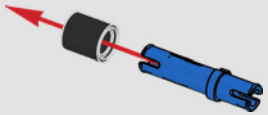

2

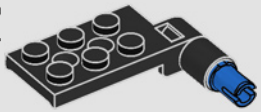

3

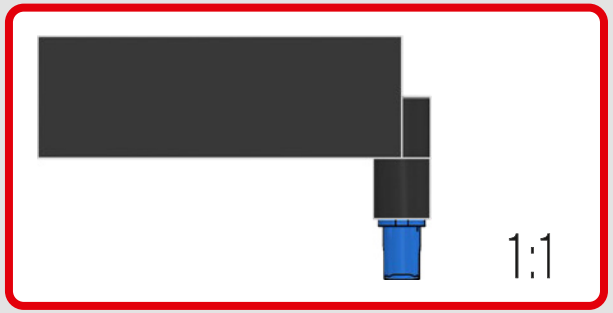

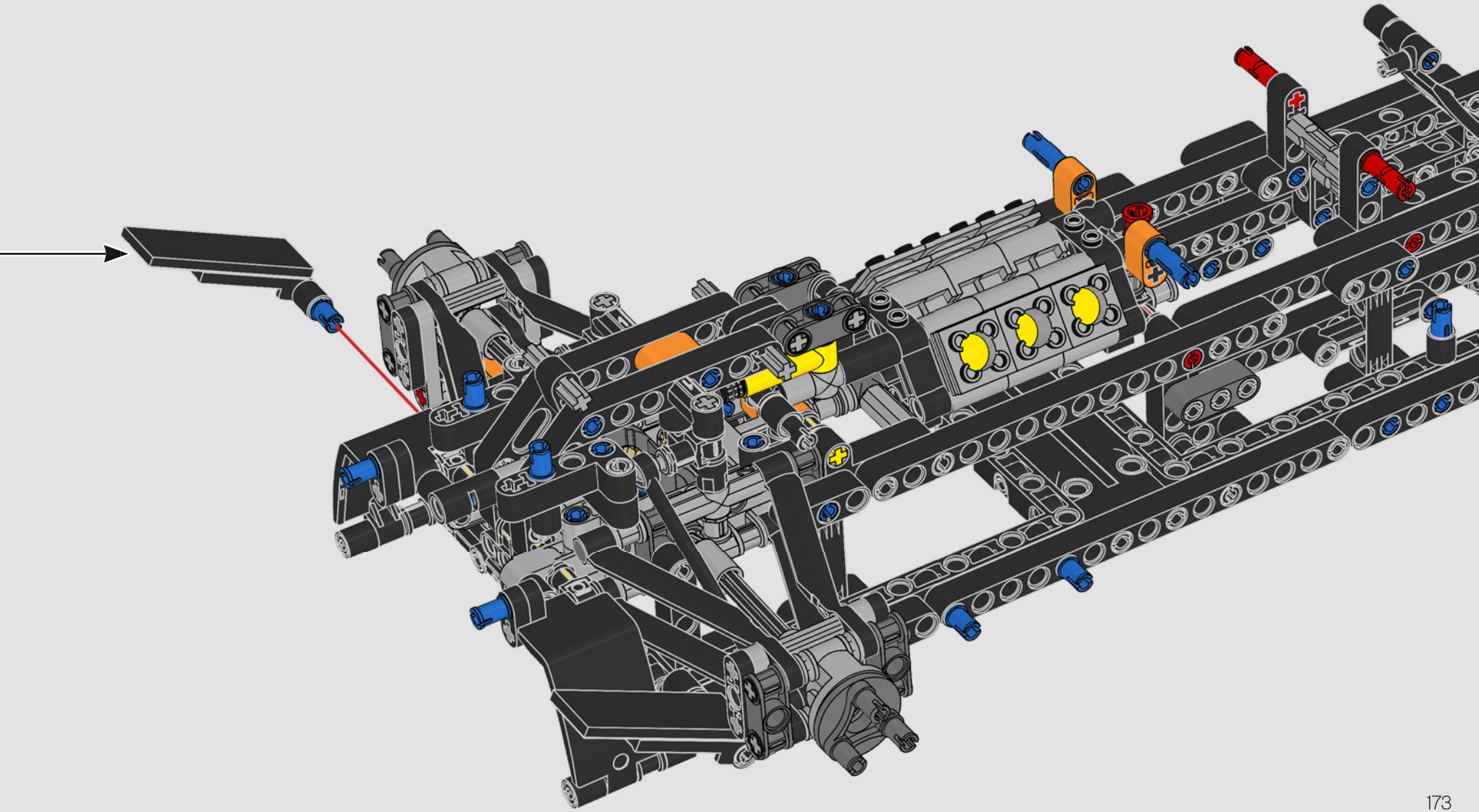

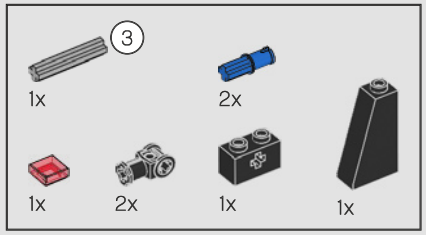

179

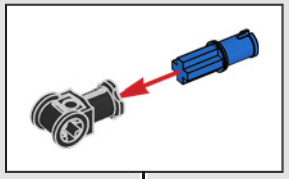

1

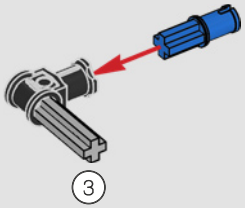

2

3

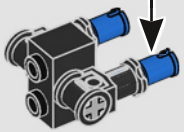

4

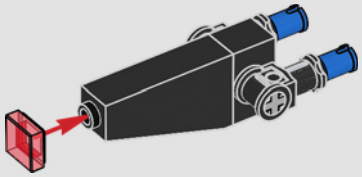

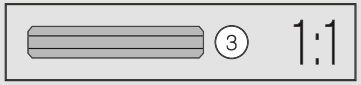

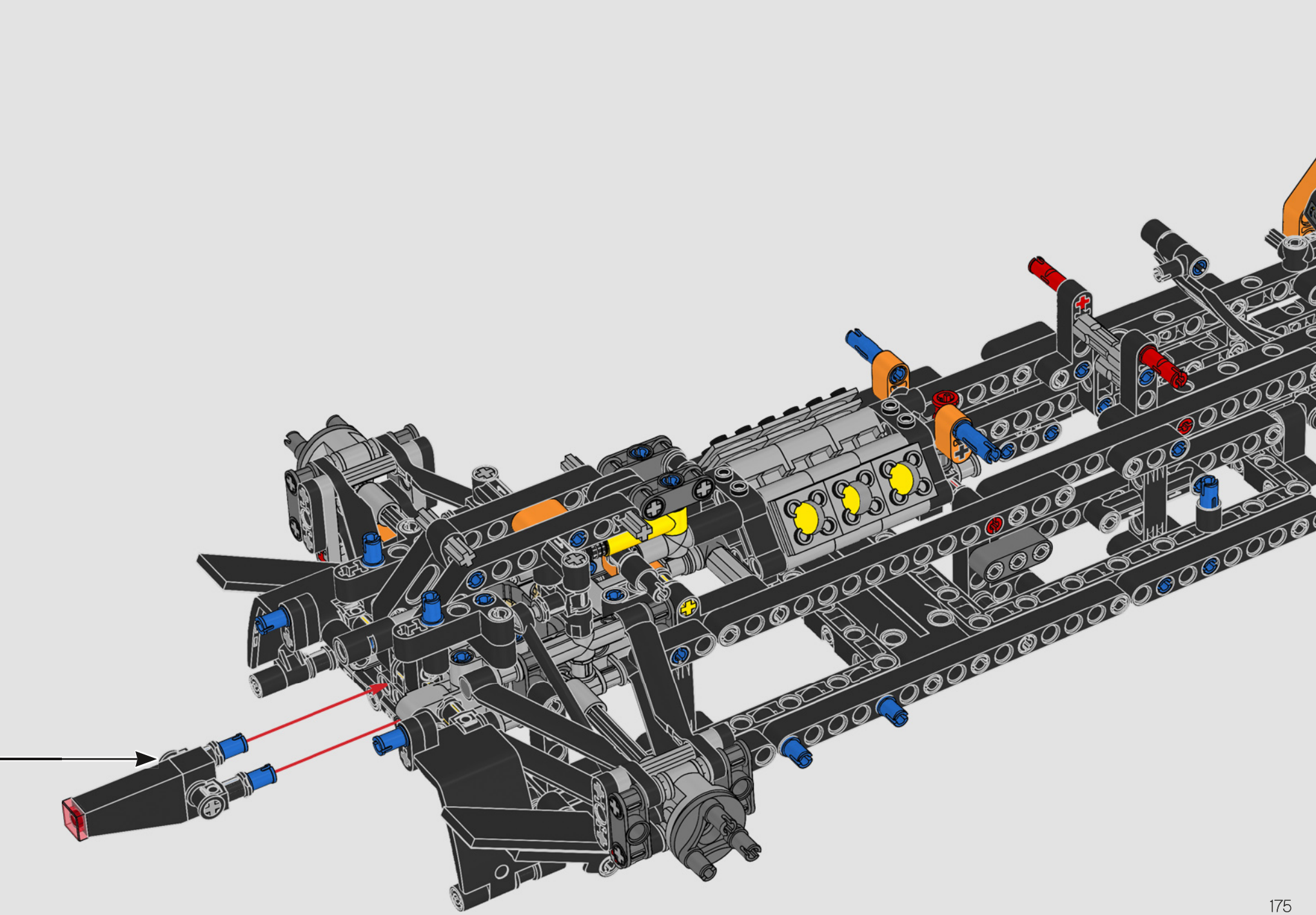

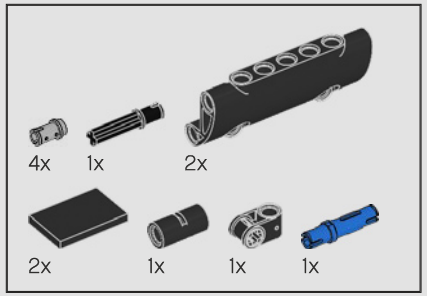

180

1

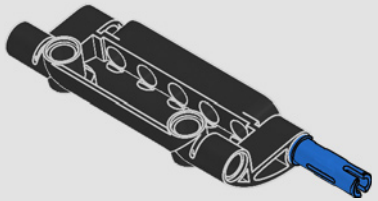

2

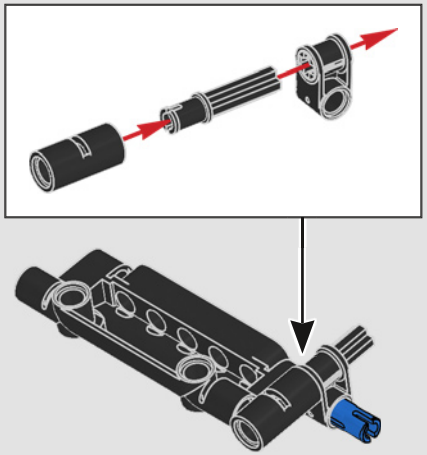

3

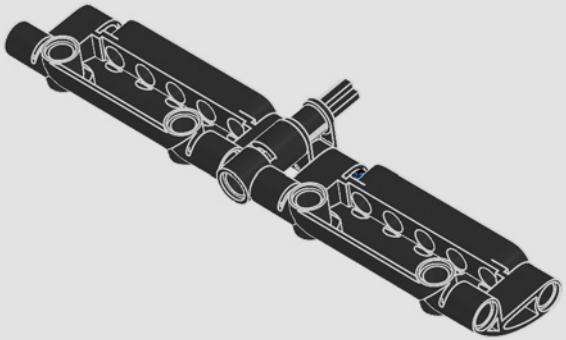

4

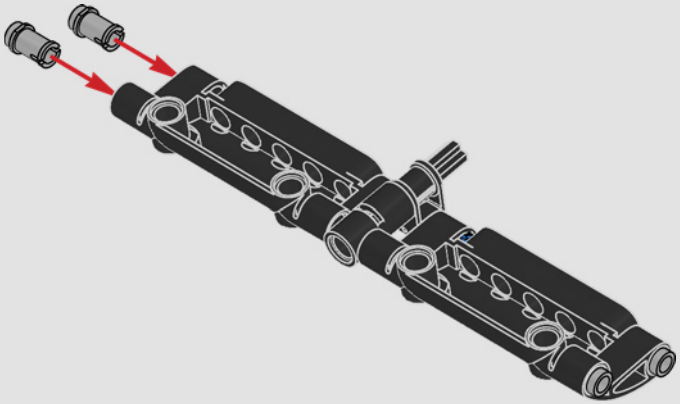

5

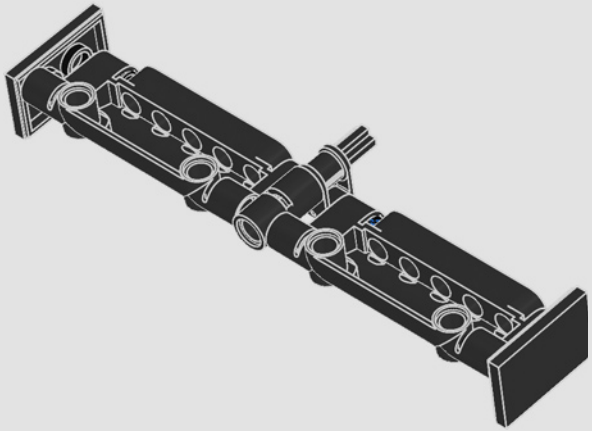

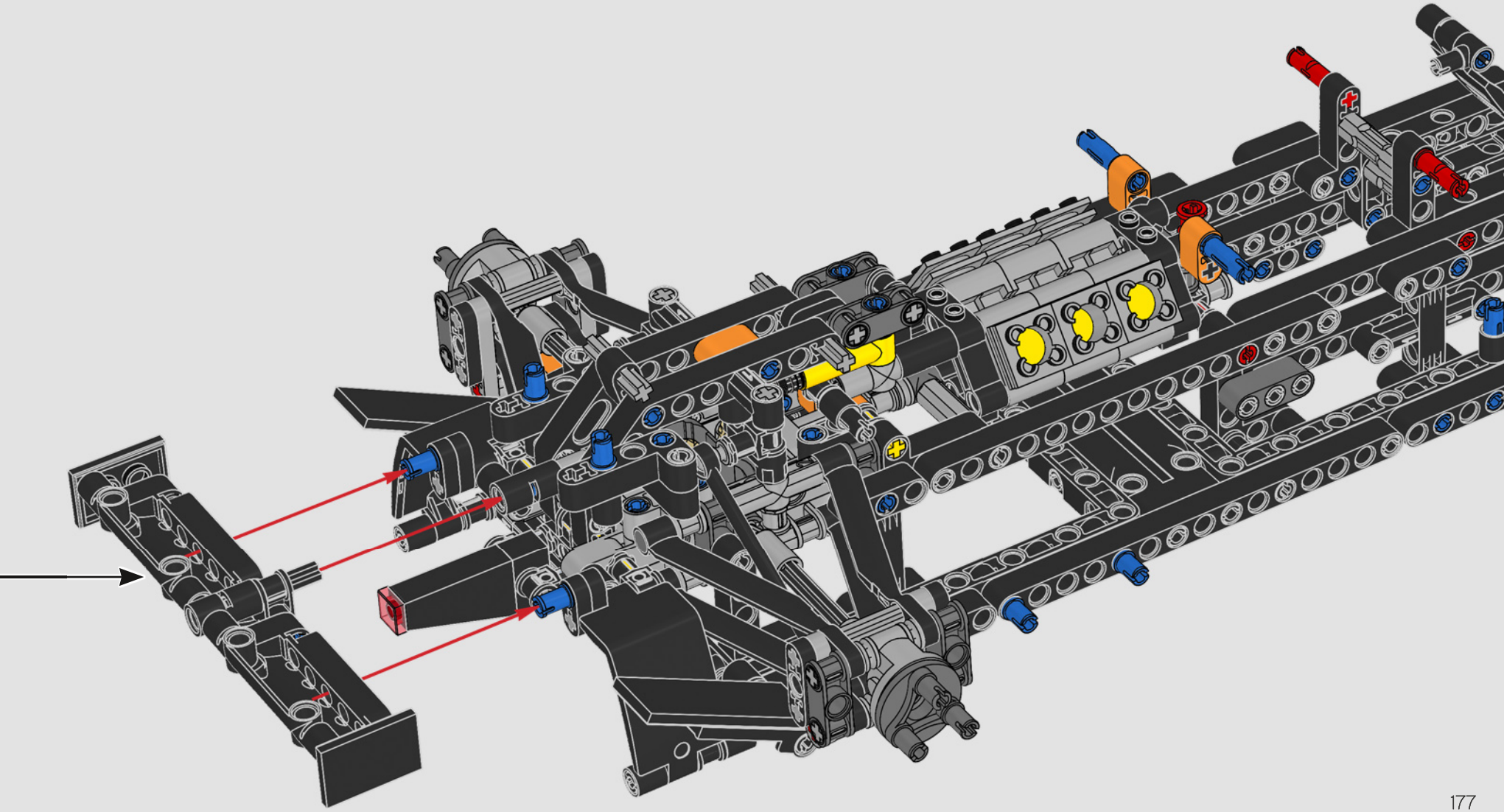

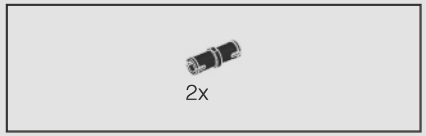

181

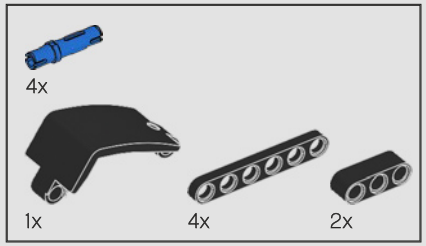

182

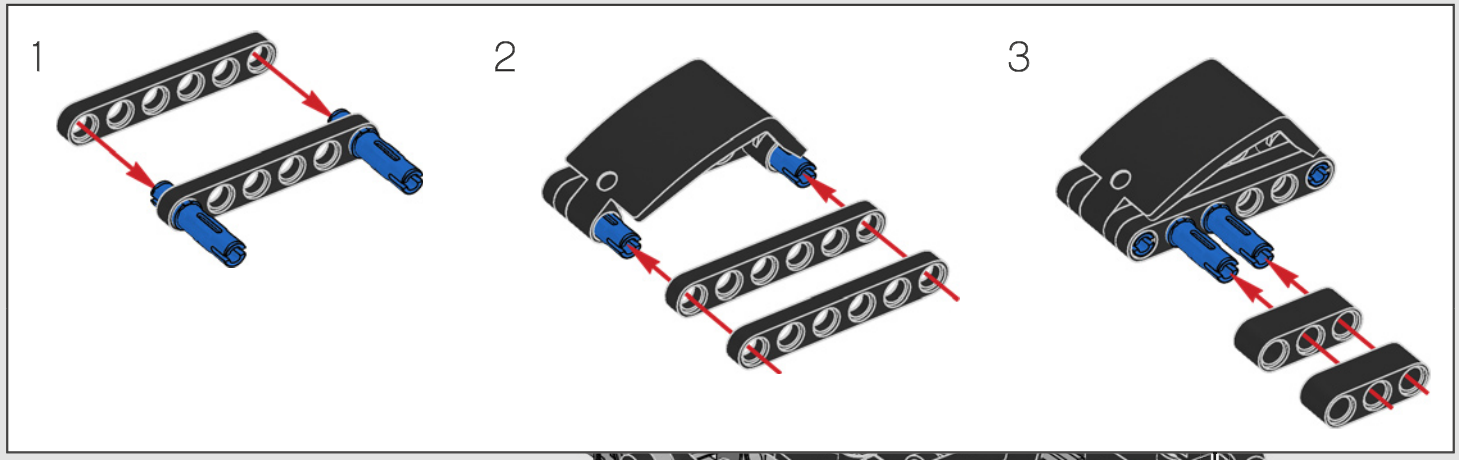

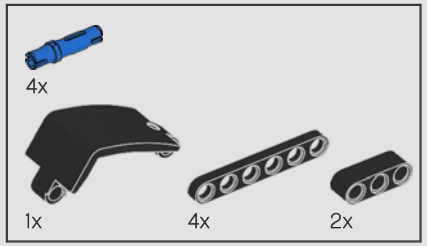

183

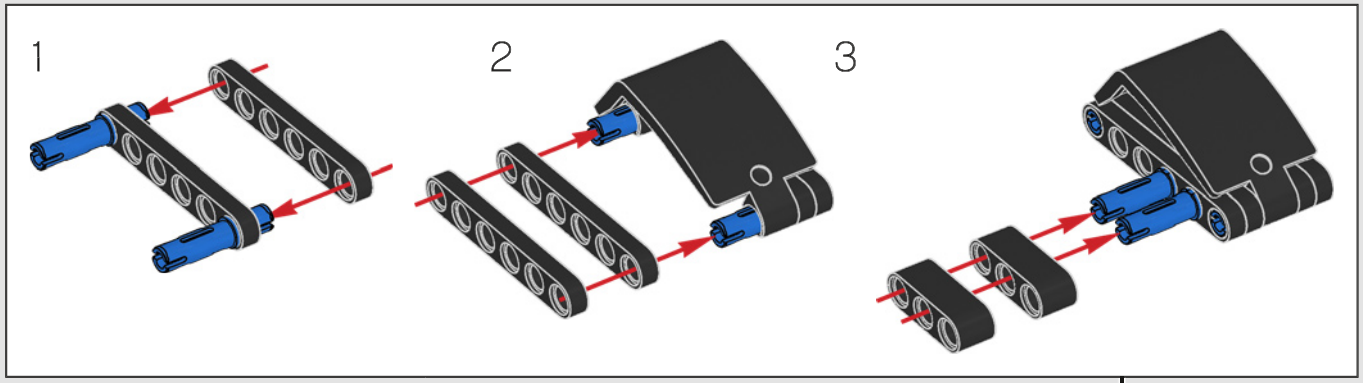

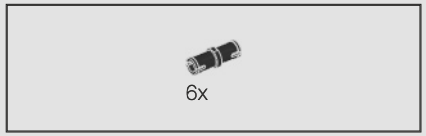

184

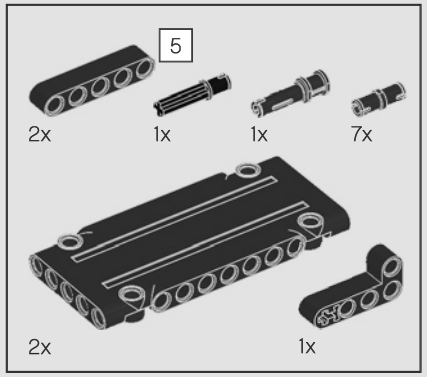
5
2x
1x
1x
7x
2x
1x

185

1

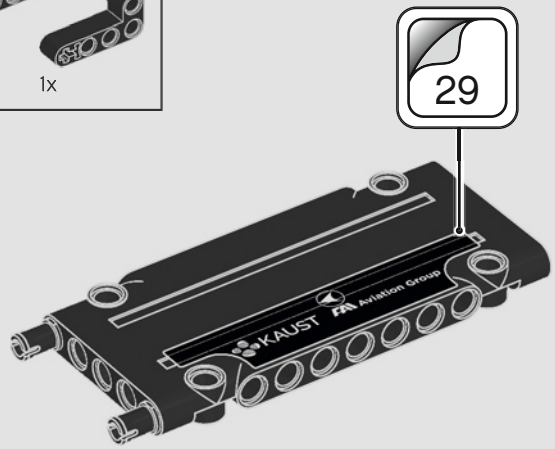
29
KAUST
Aviation Group

2

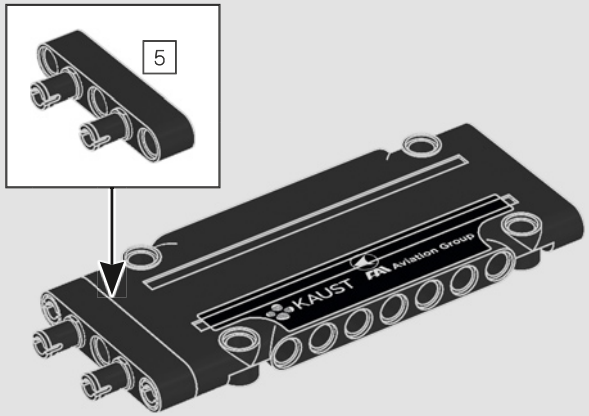
5
KAUST
Aviation Group

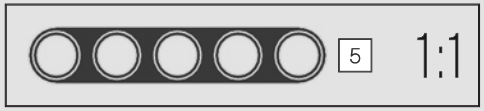
5
1:1

3

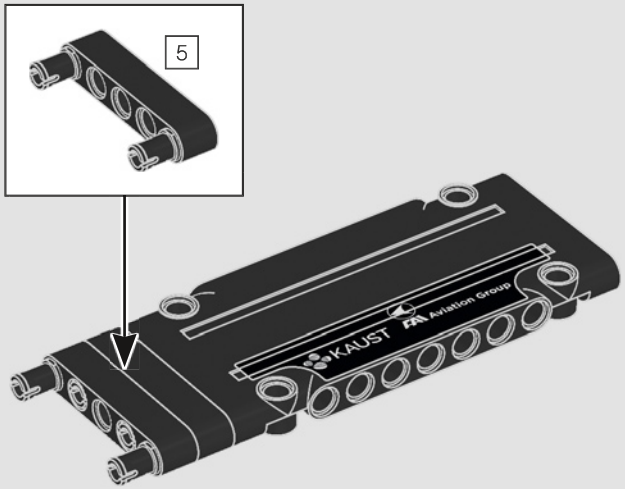
5
KAUST
Aviation Group

4

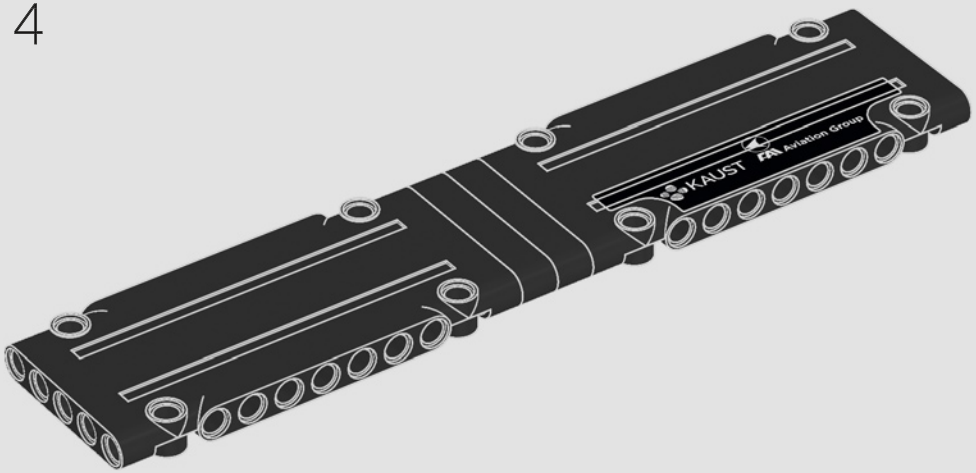
KAUST
Aviation Group

5

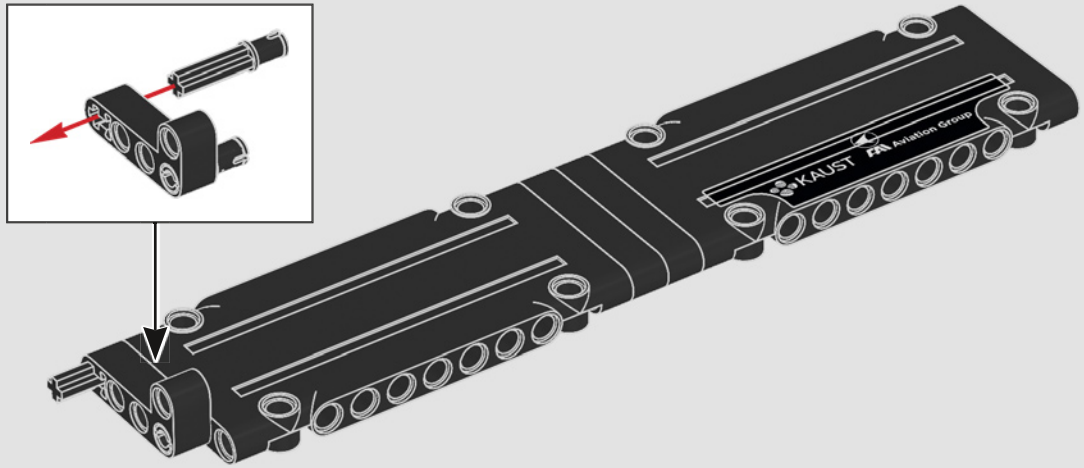

6

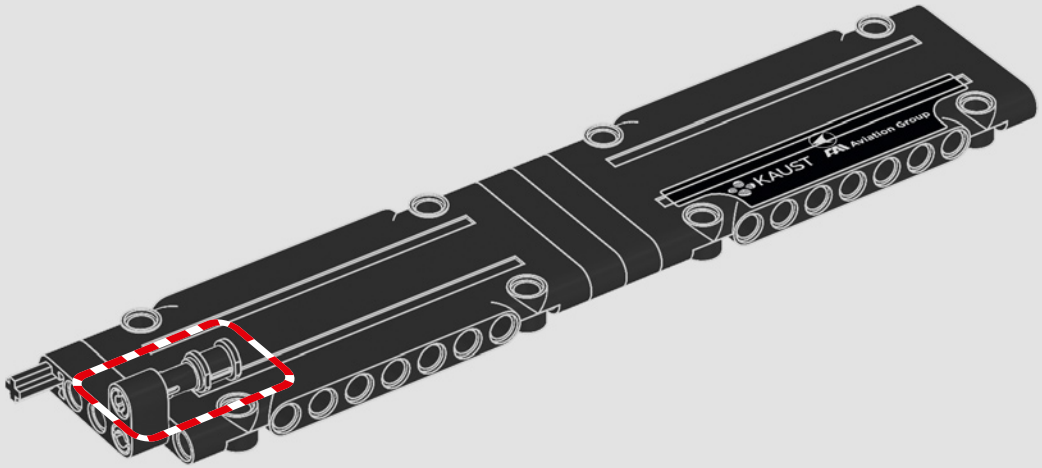

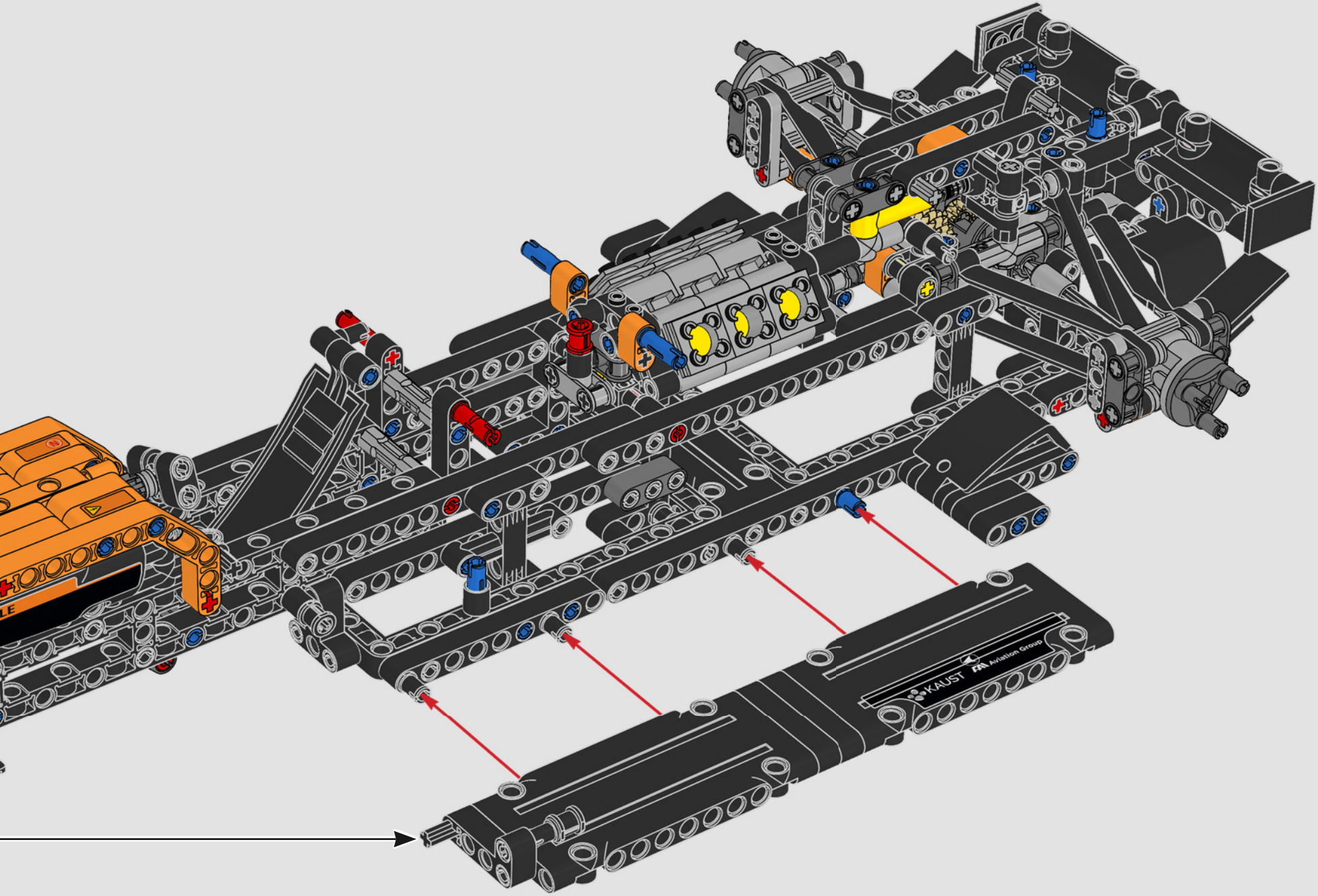
KAUST
Aviation Group

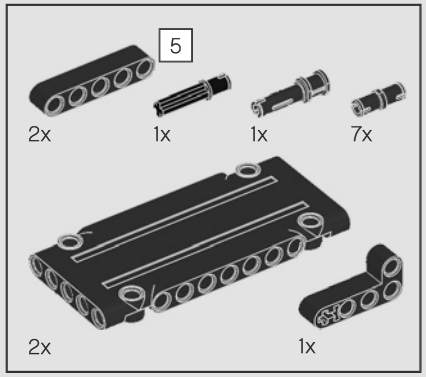

186

1

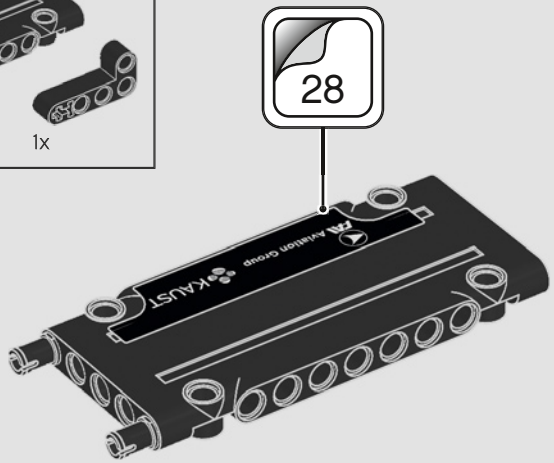

2

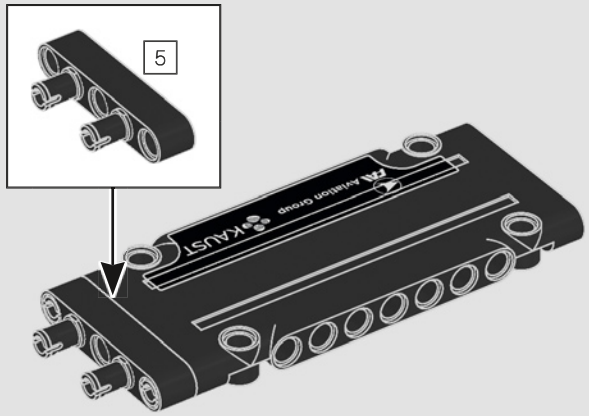

3

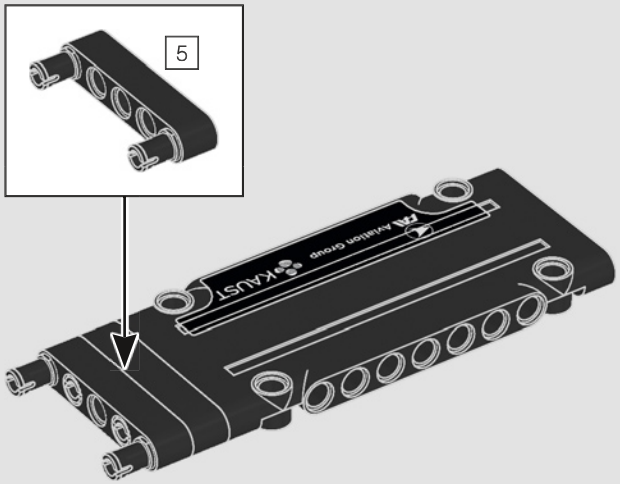

4

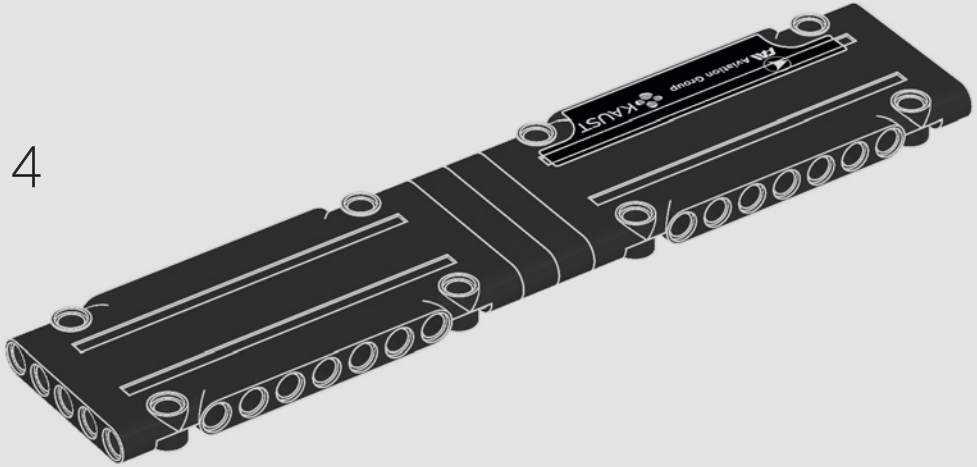

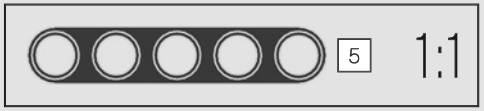

5

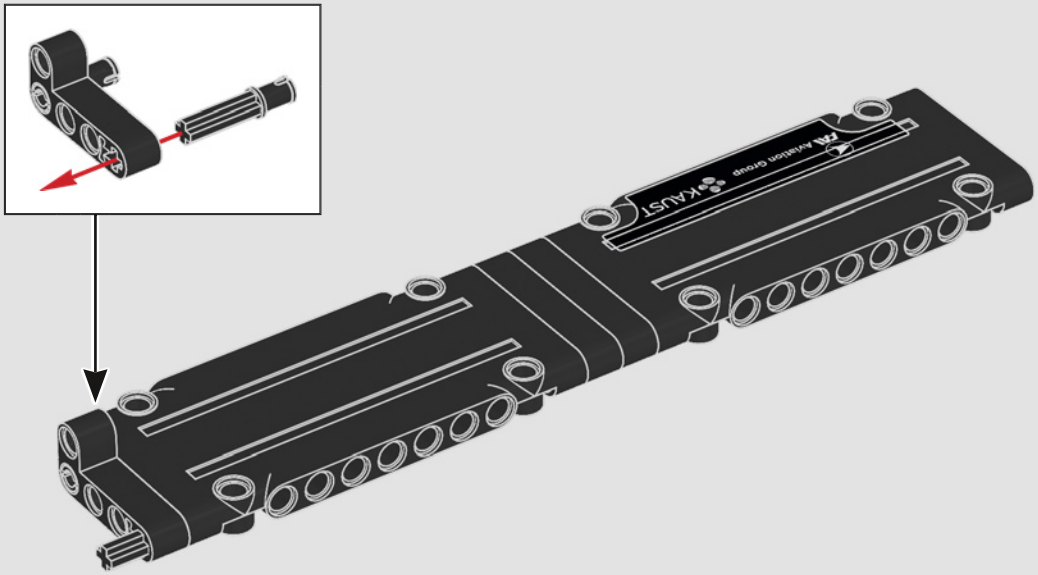

6

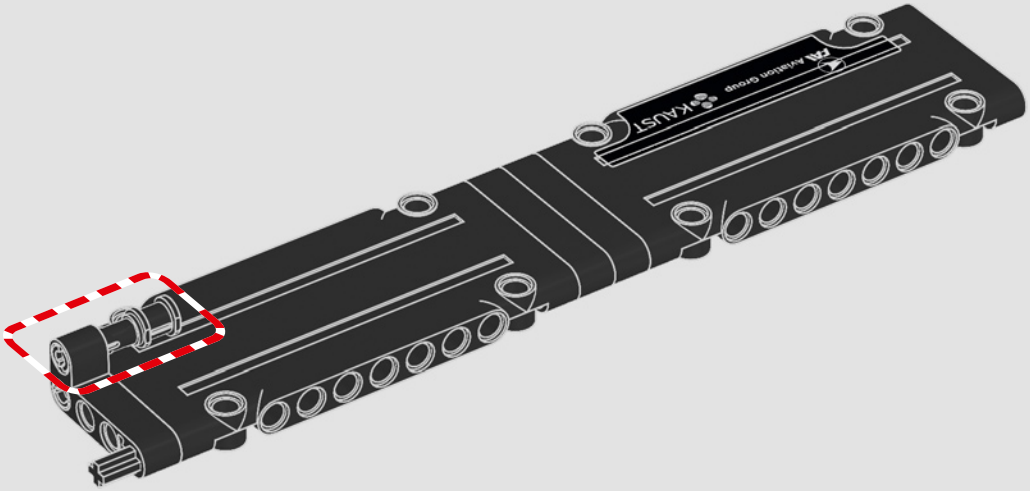

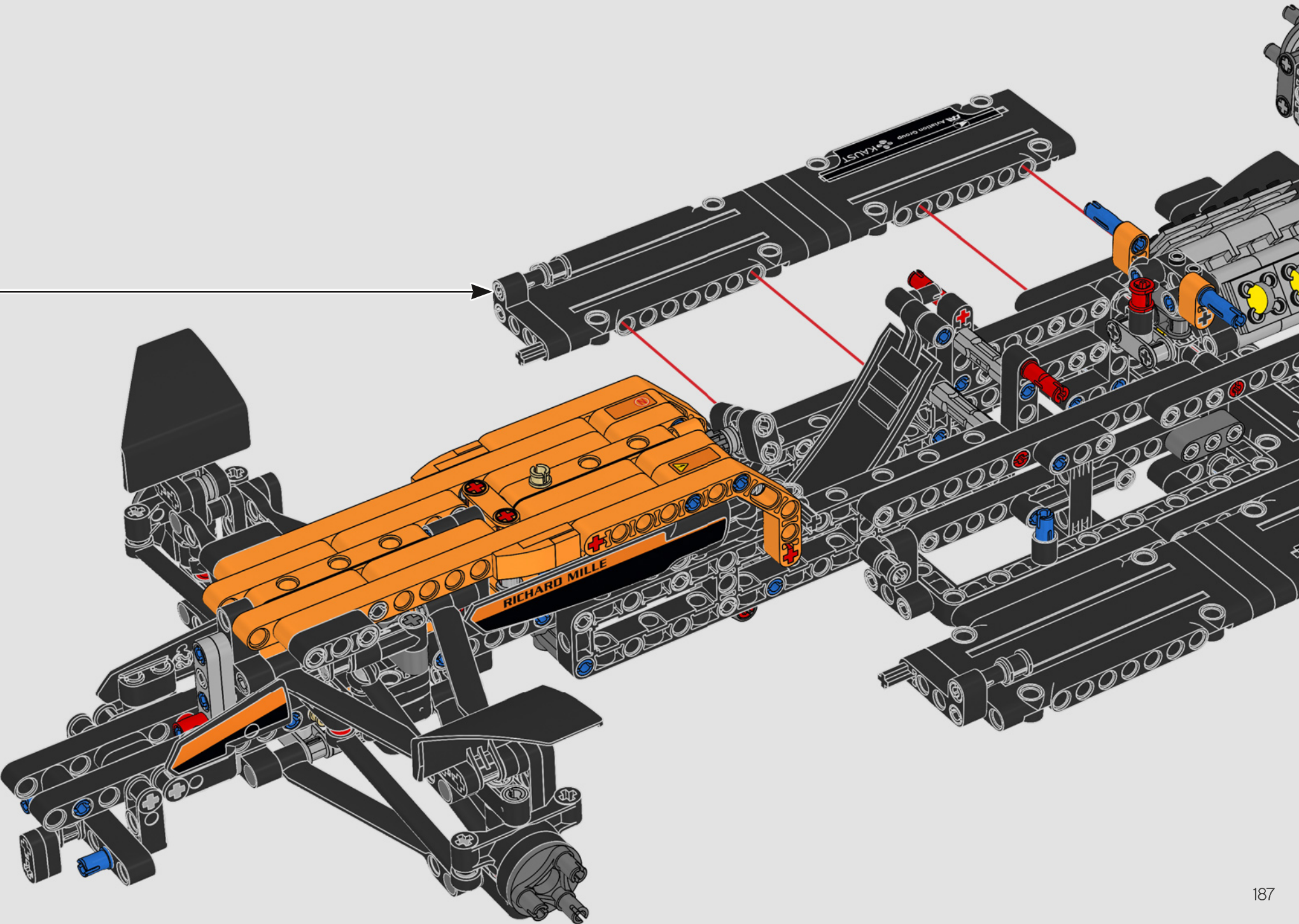
RICHARD MILLE
KAUST

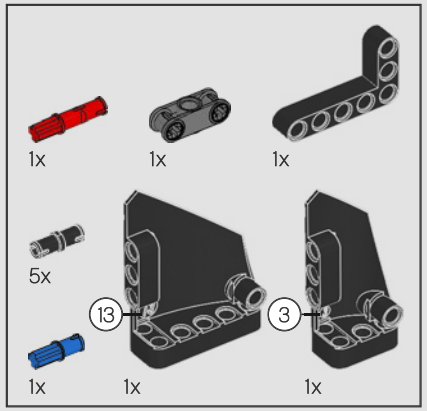

187

1

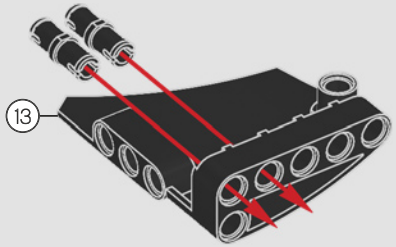

2

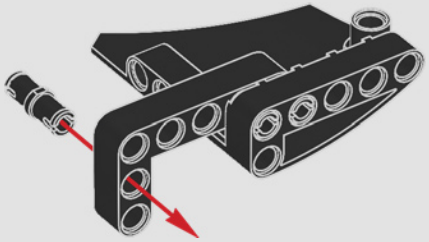

3

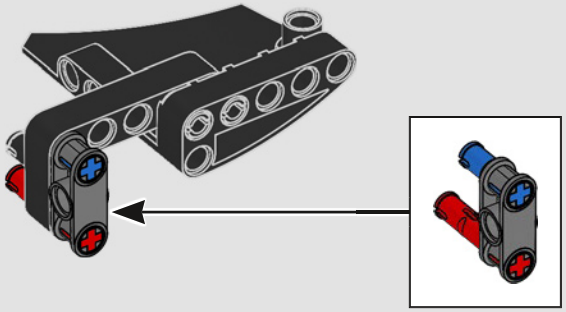

4

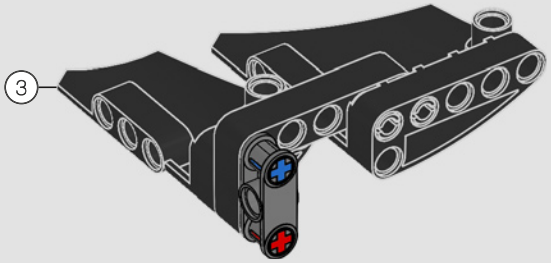

5

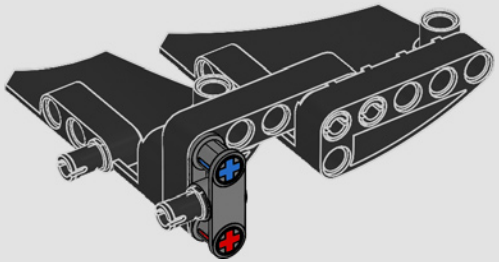

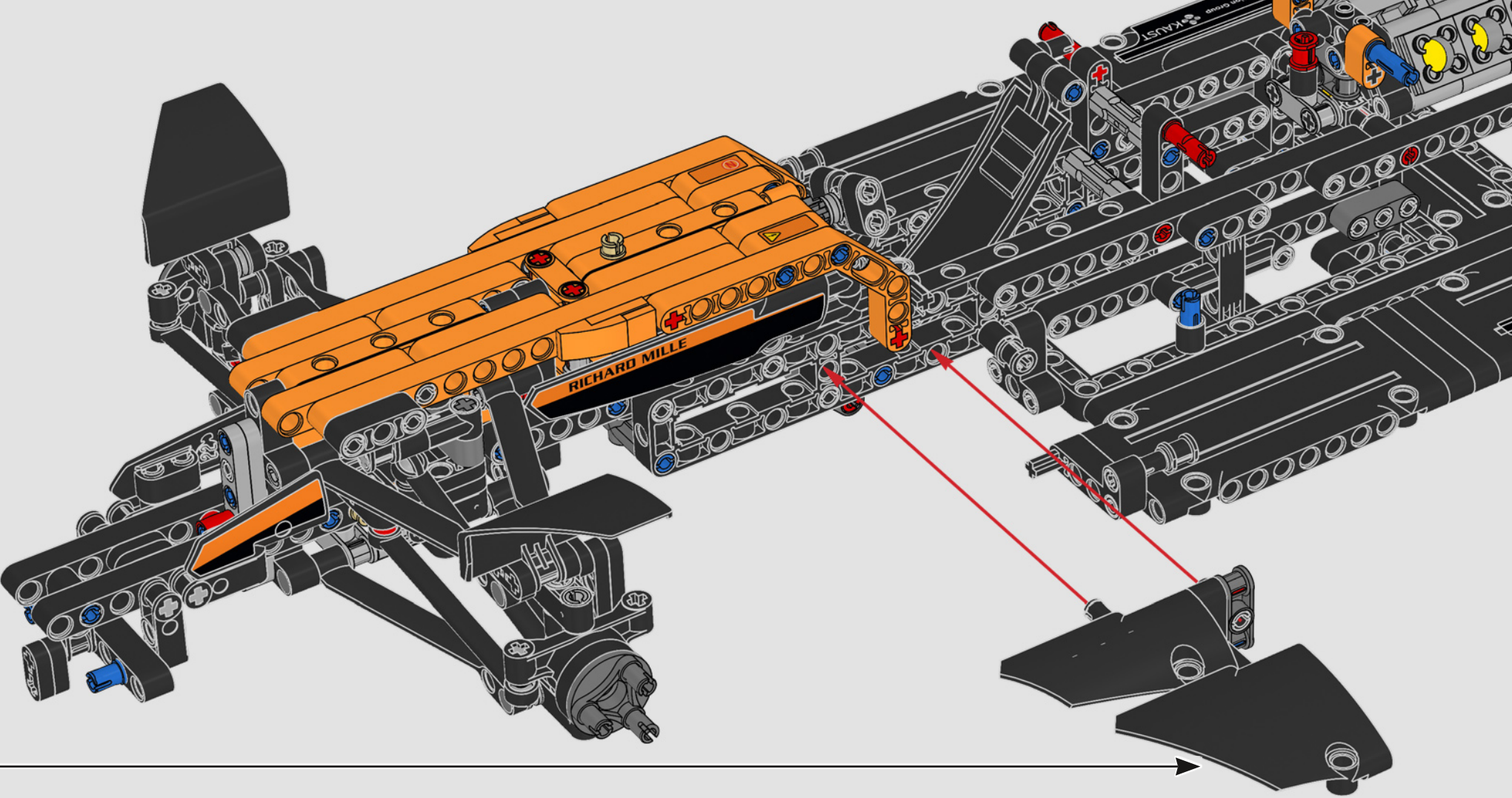
RICHARD MILLE

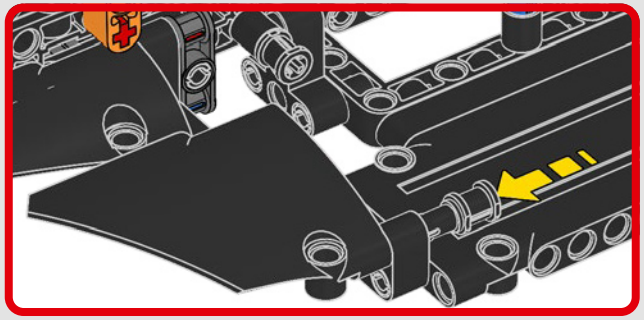

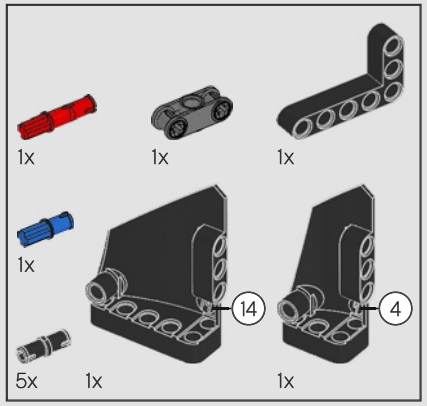

188

1

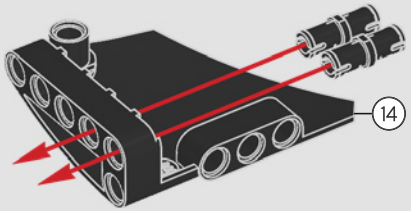

2

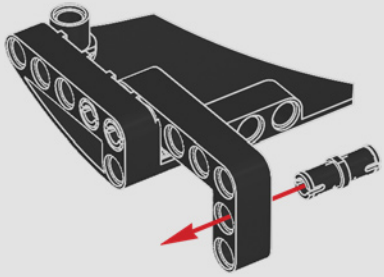

3

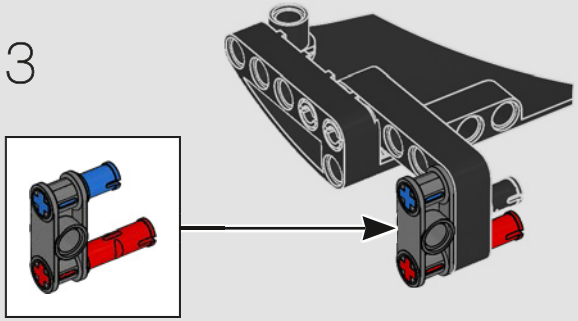

4

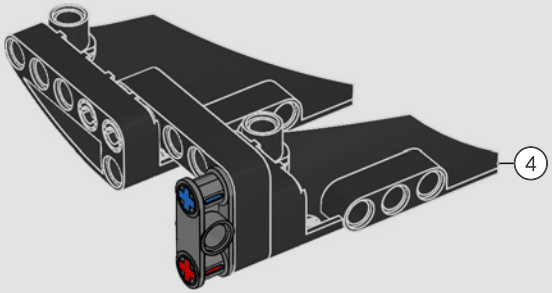

5

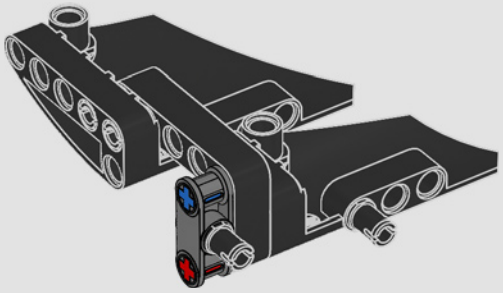

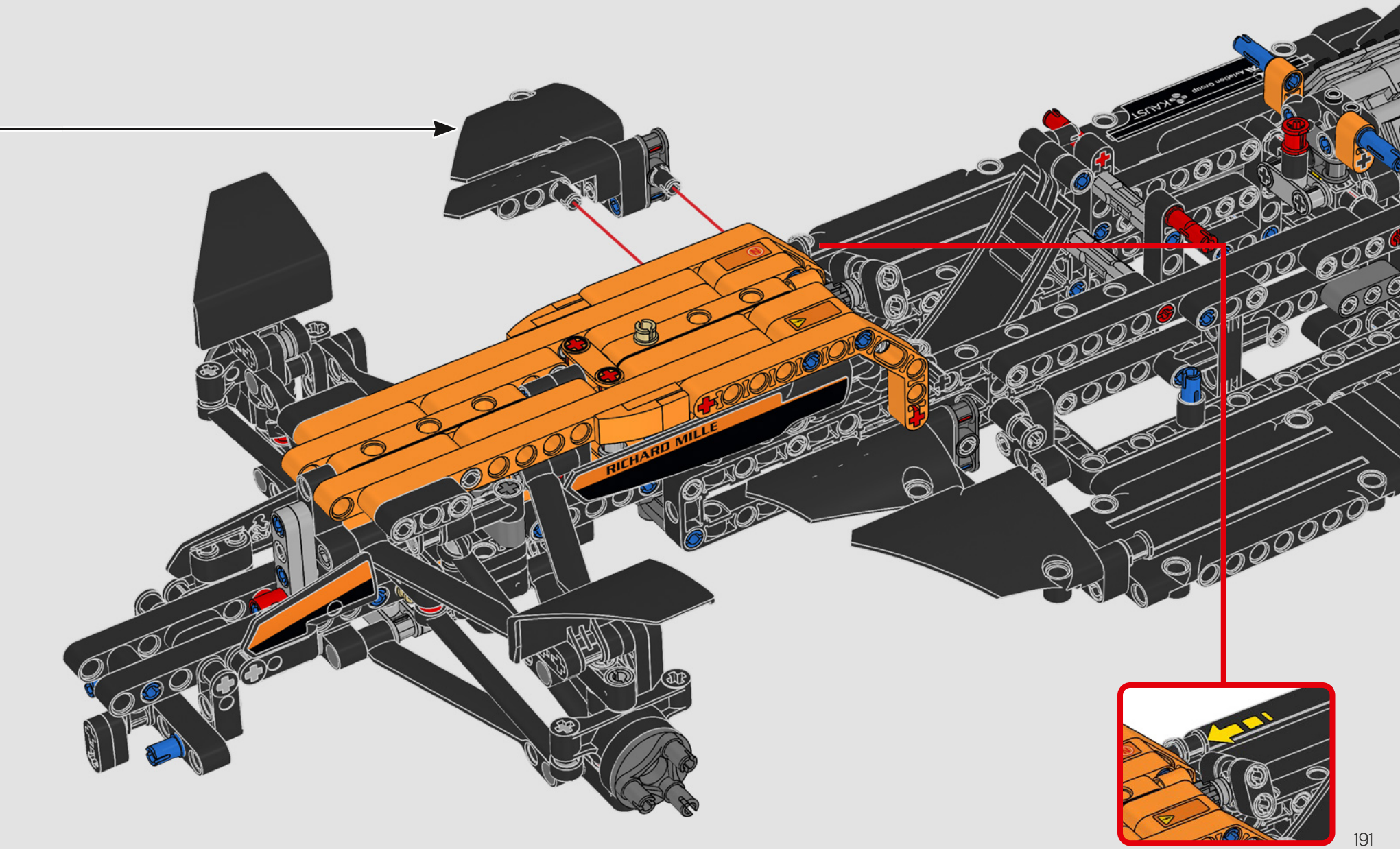
RICHARD MILLE
KAUST

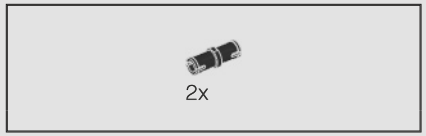

189

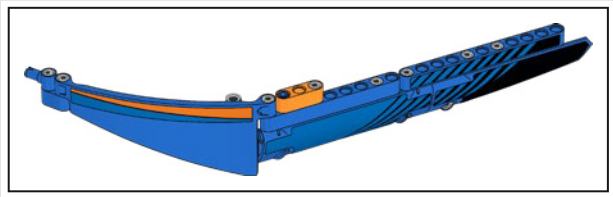

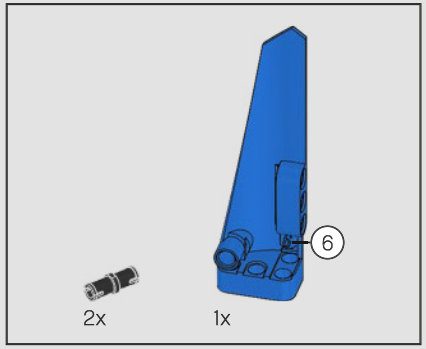

190

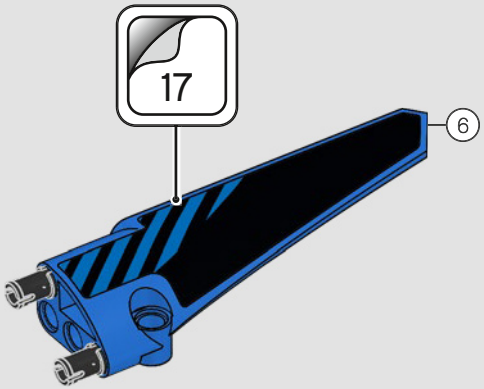

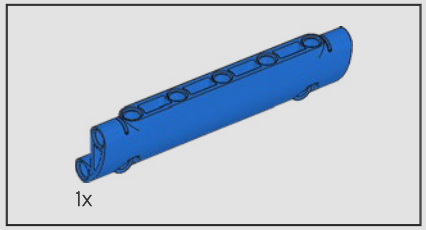

191

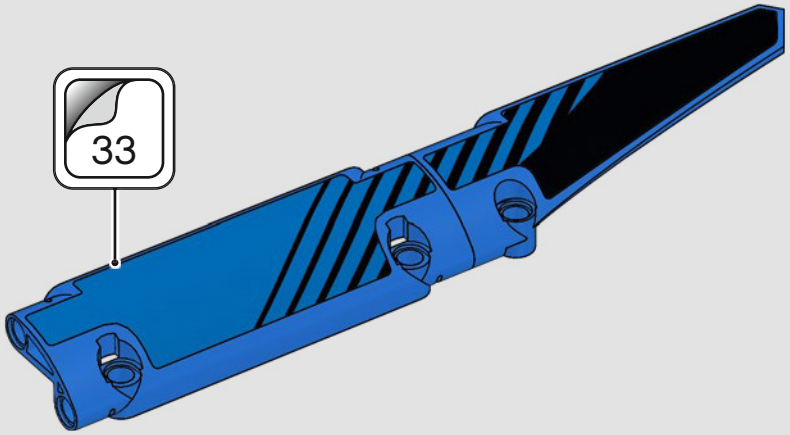

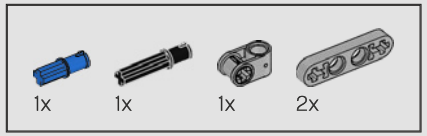

192

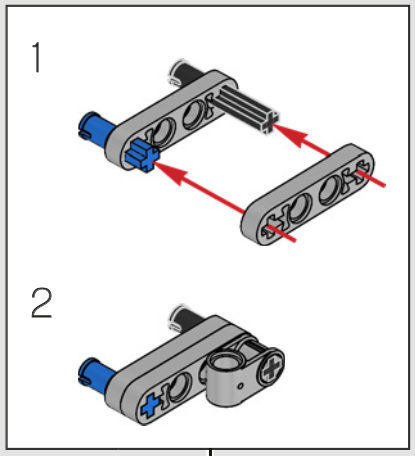

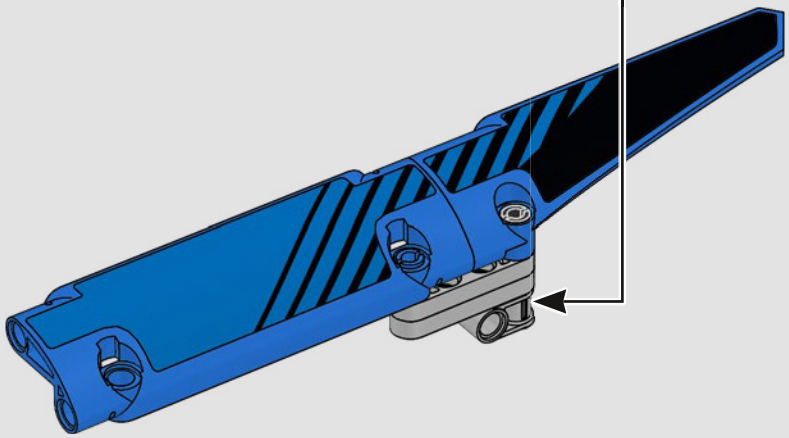

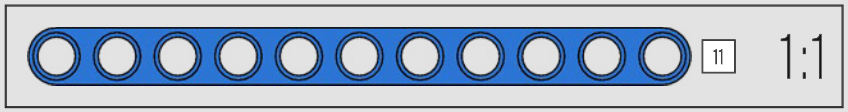

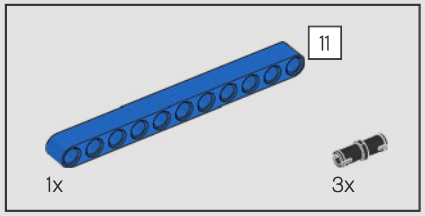

193

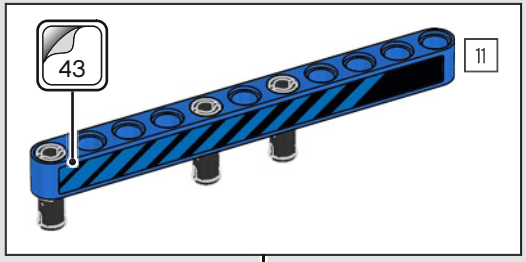

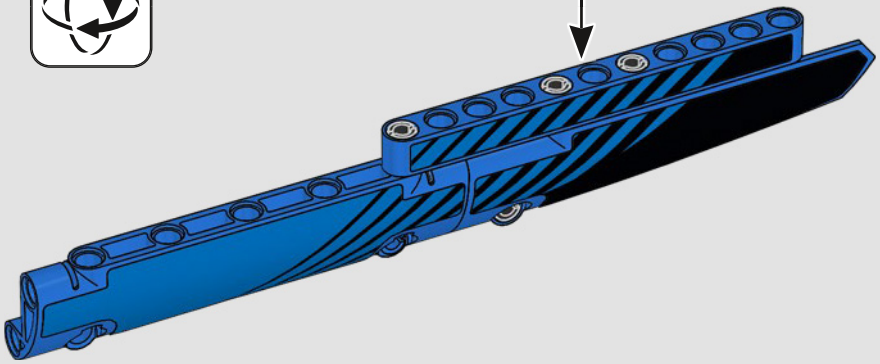

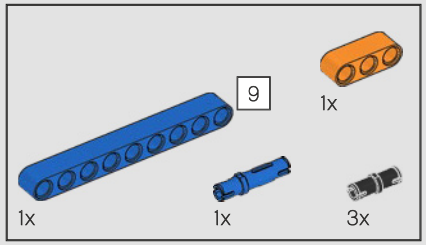

194

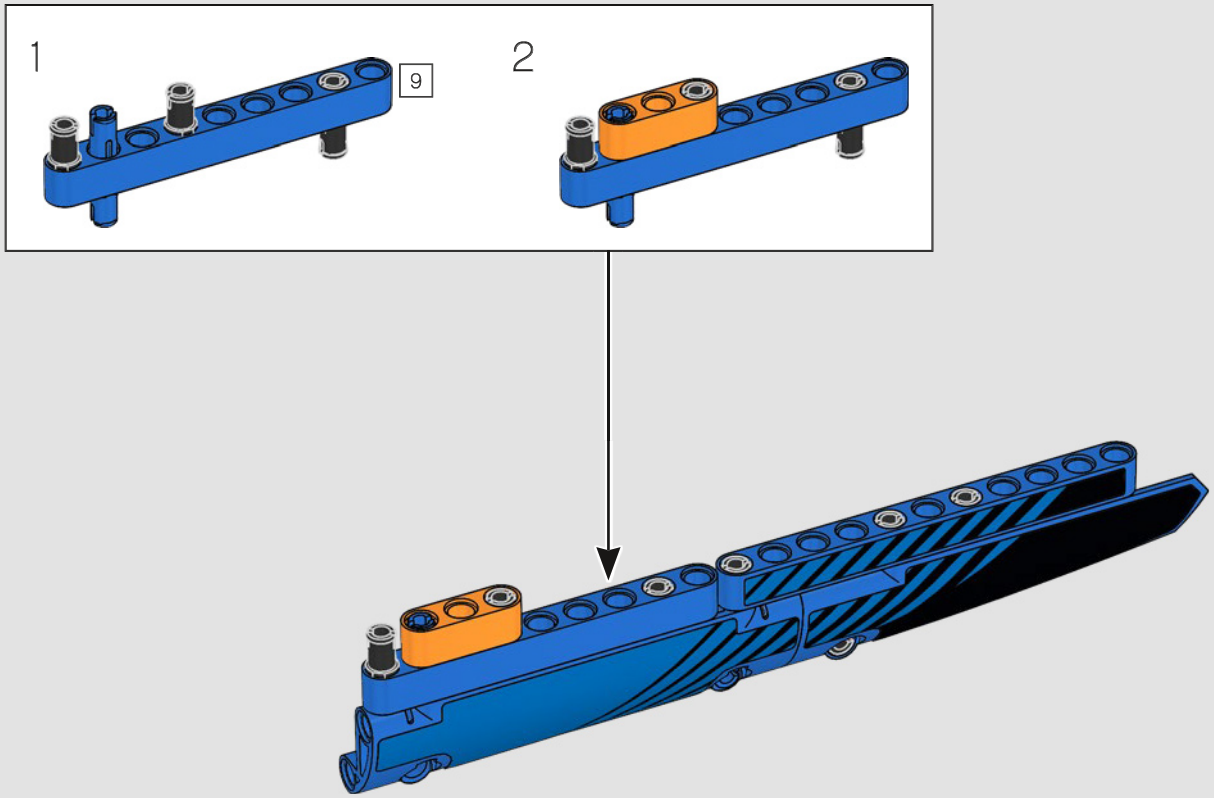

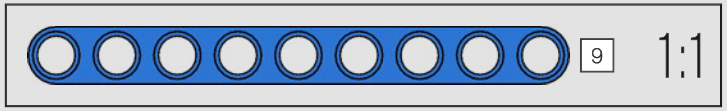

195

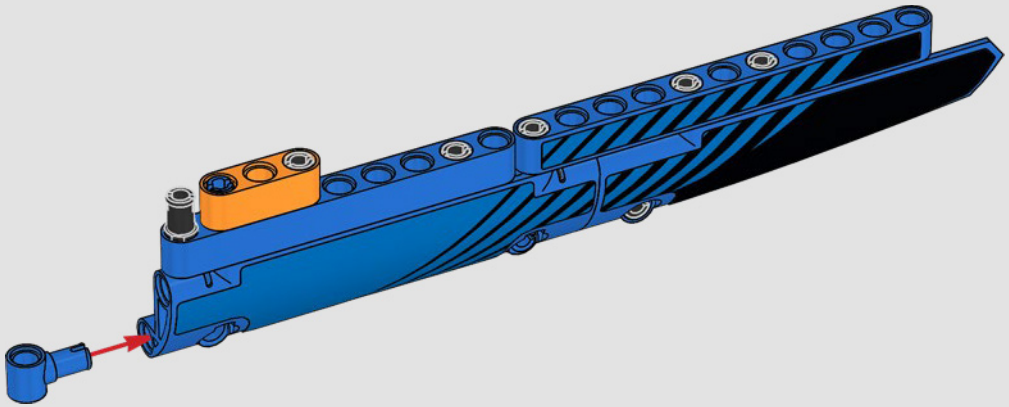

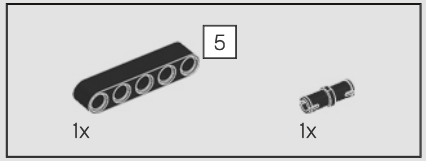

196

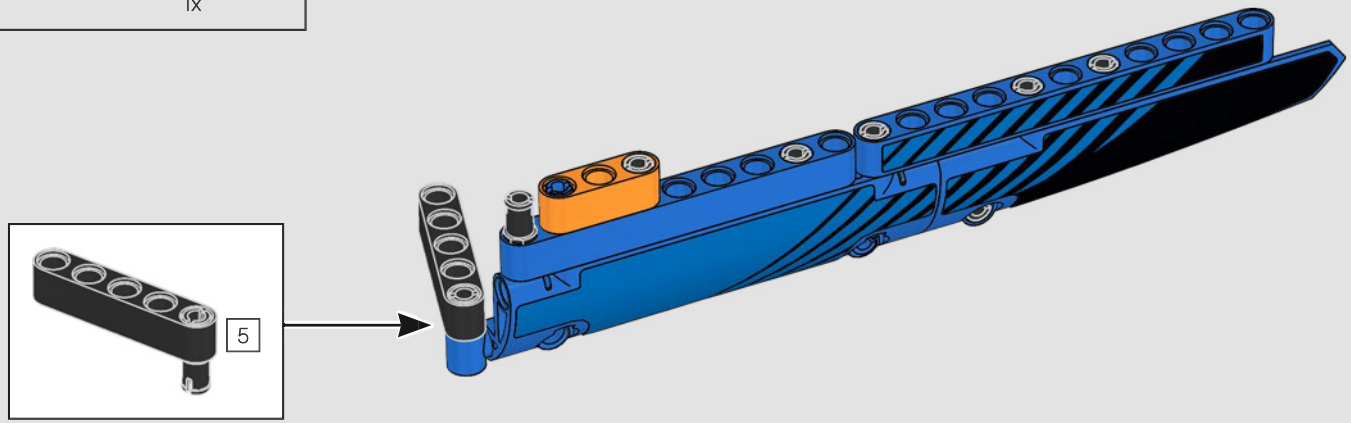

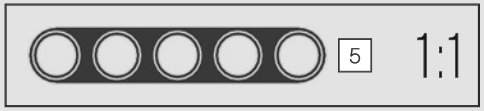

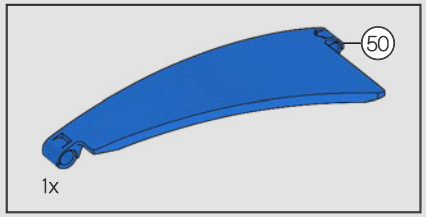

197

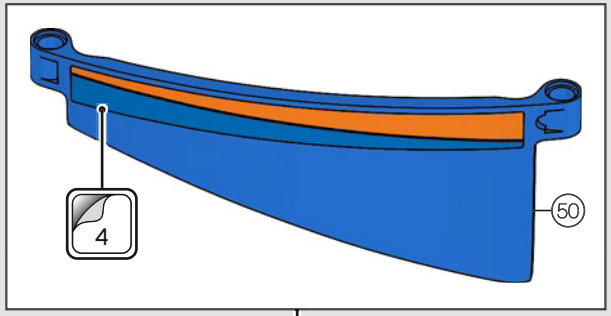

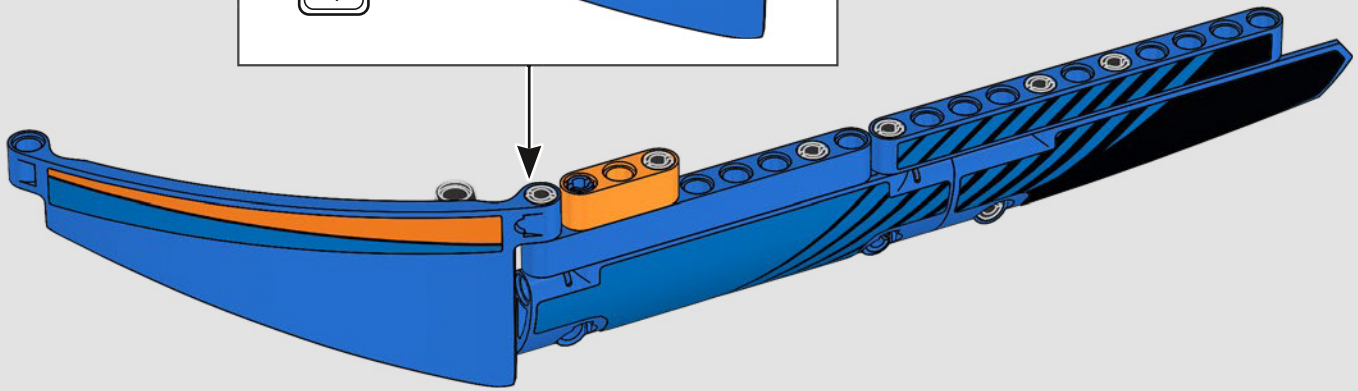

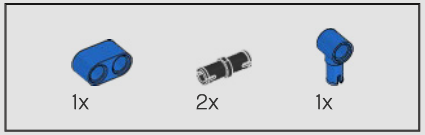

198

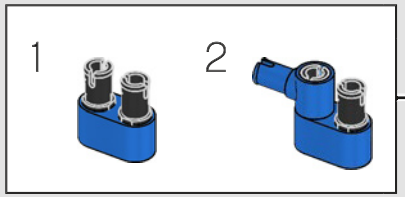

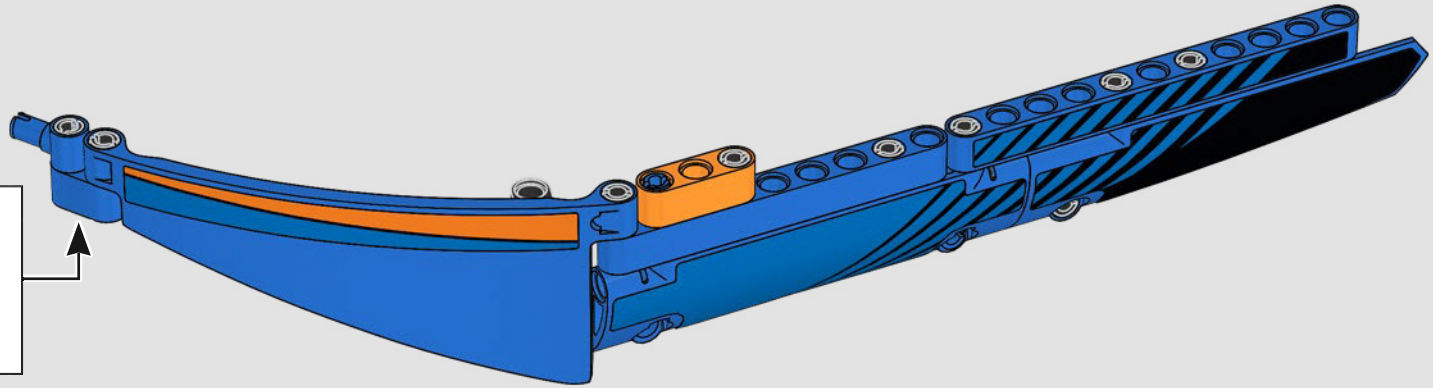

199

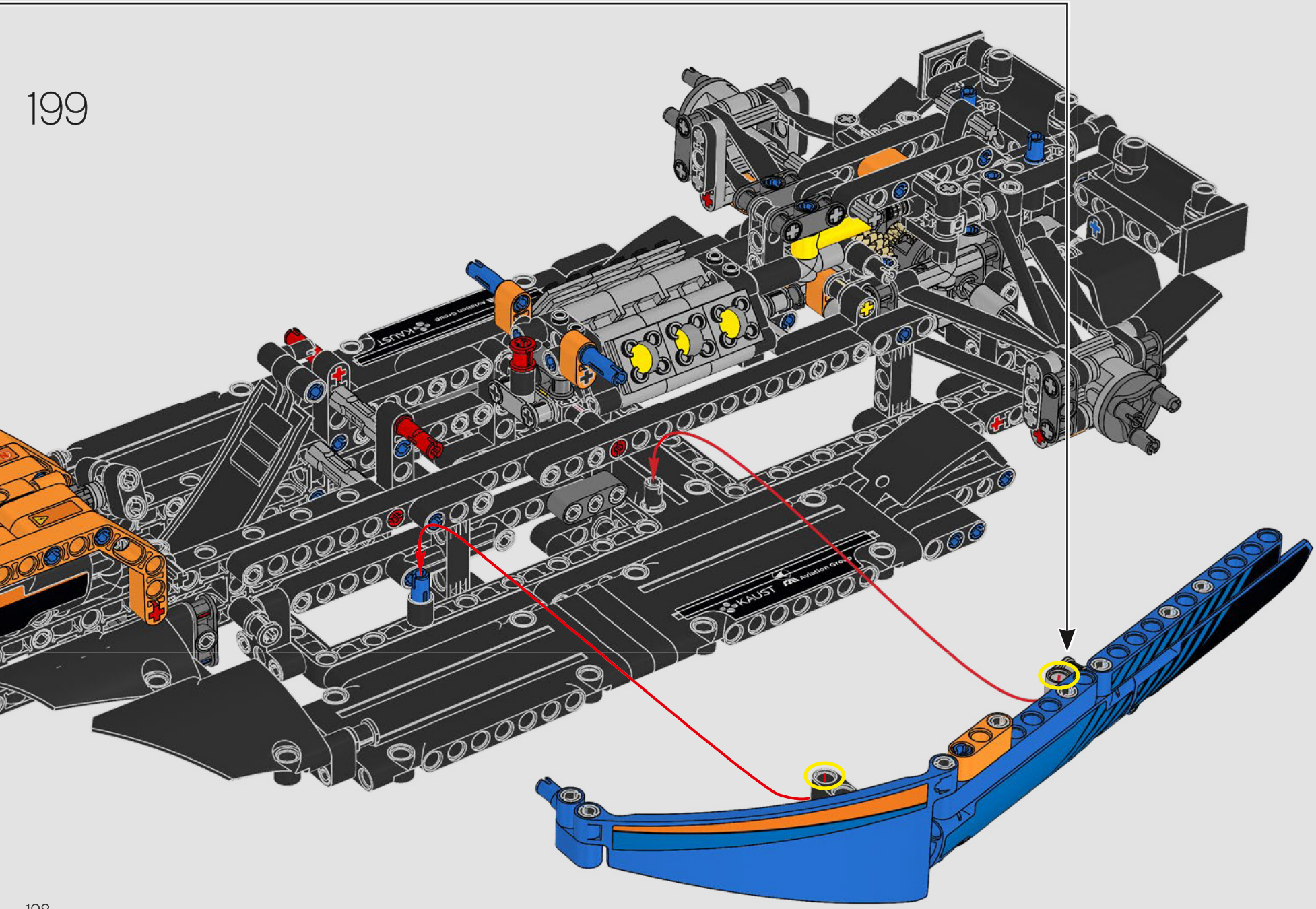

200

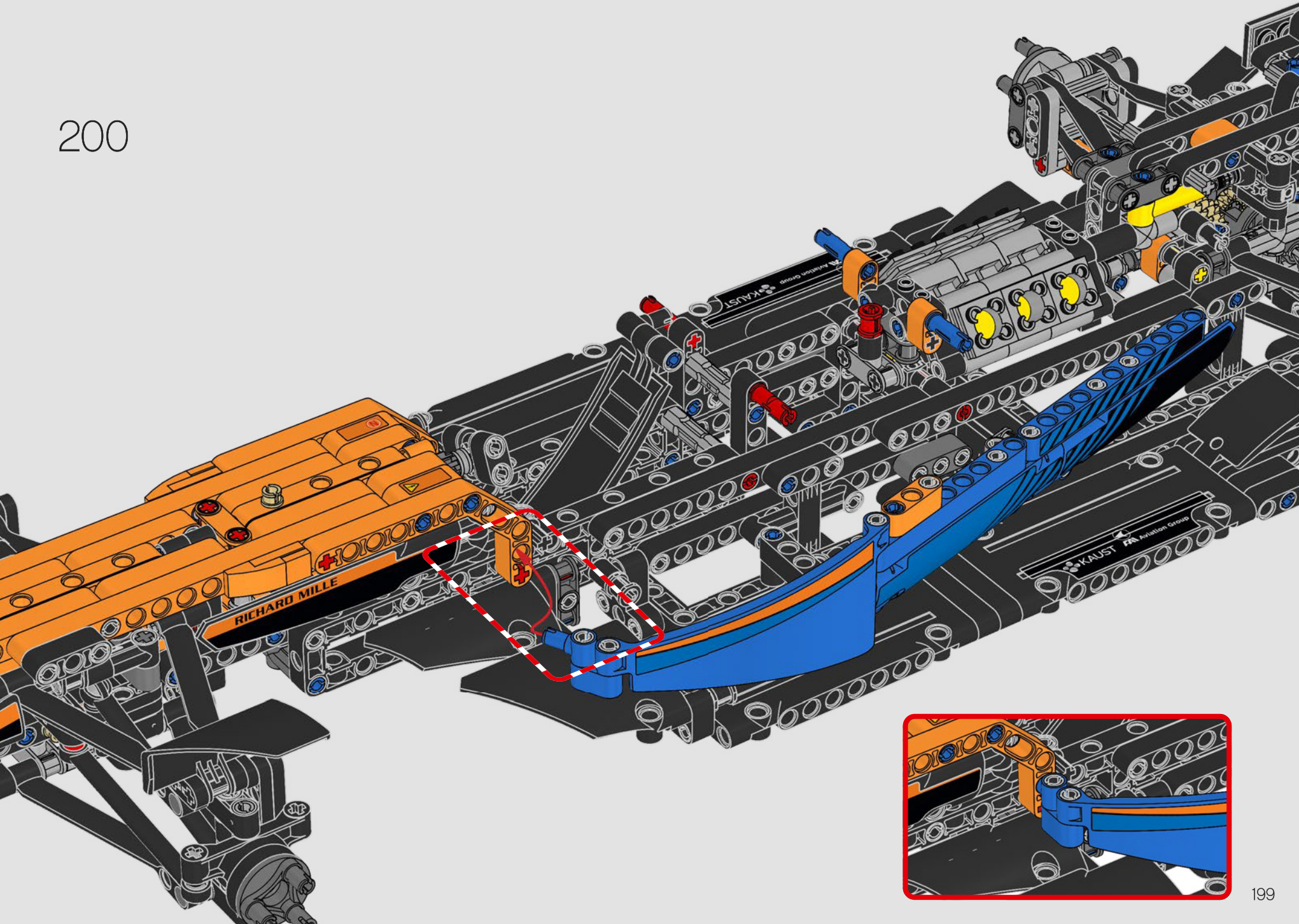

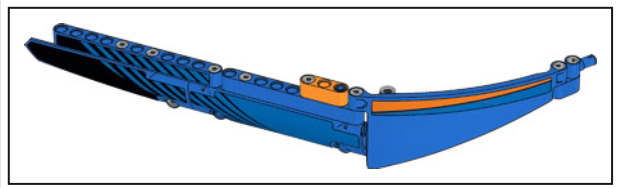

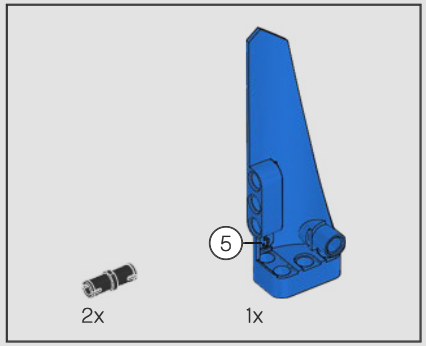

201

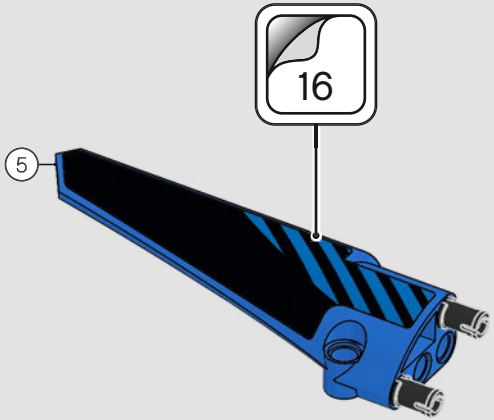

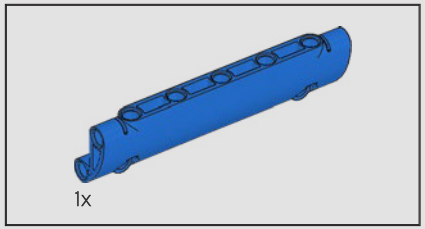

202

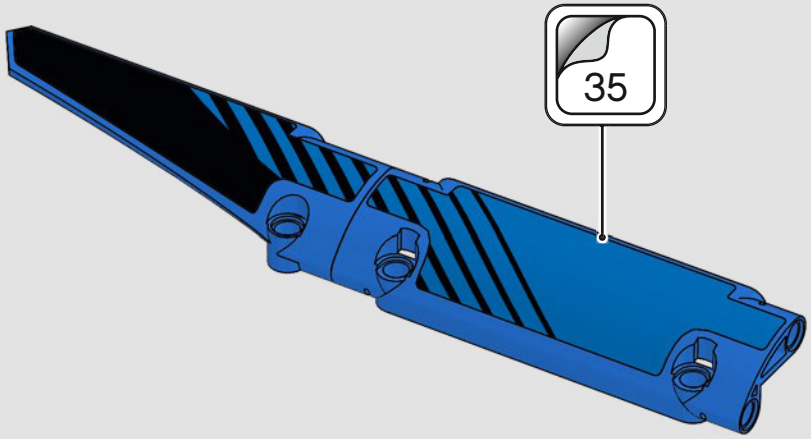

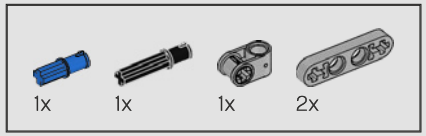

203

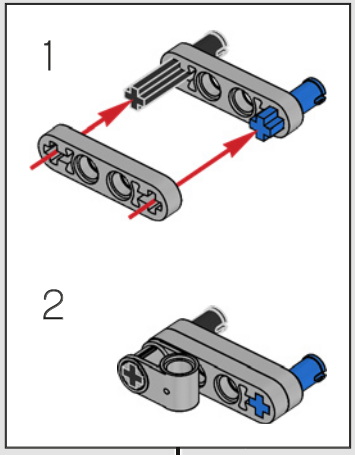

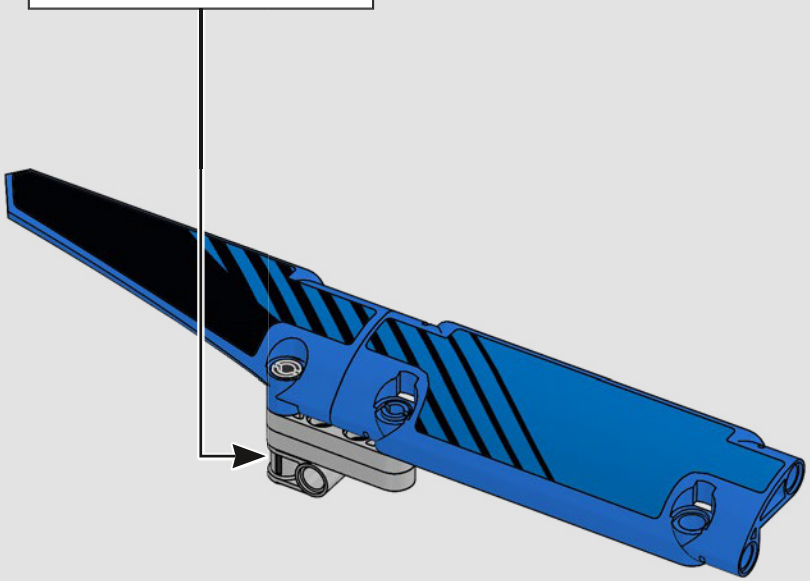

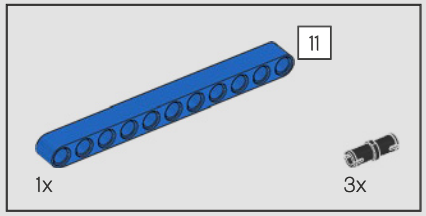

204

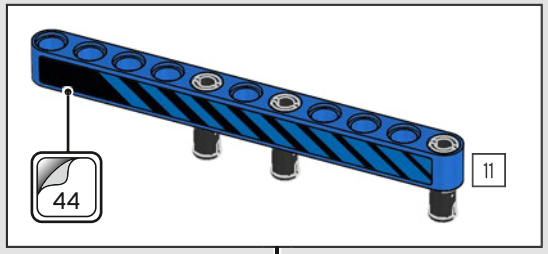

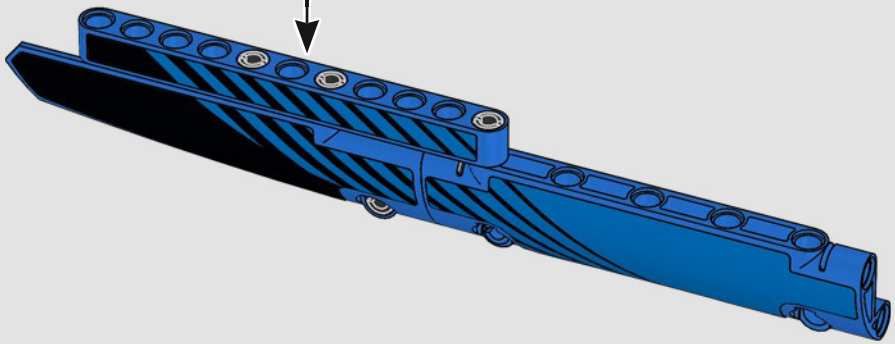

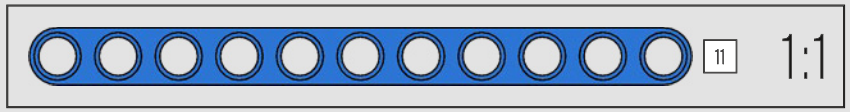

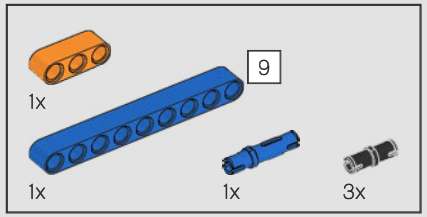

205

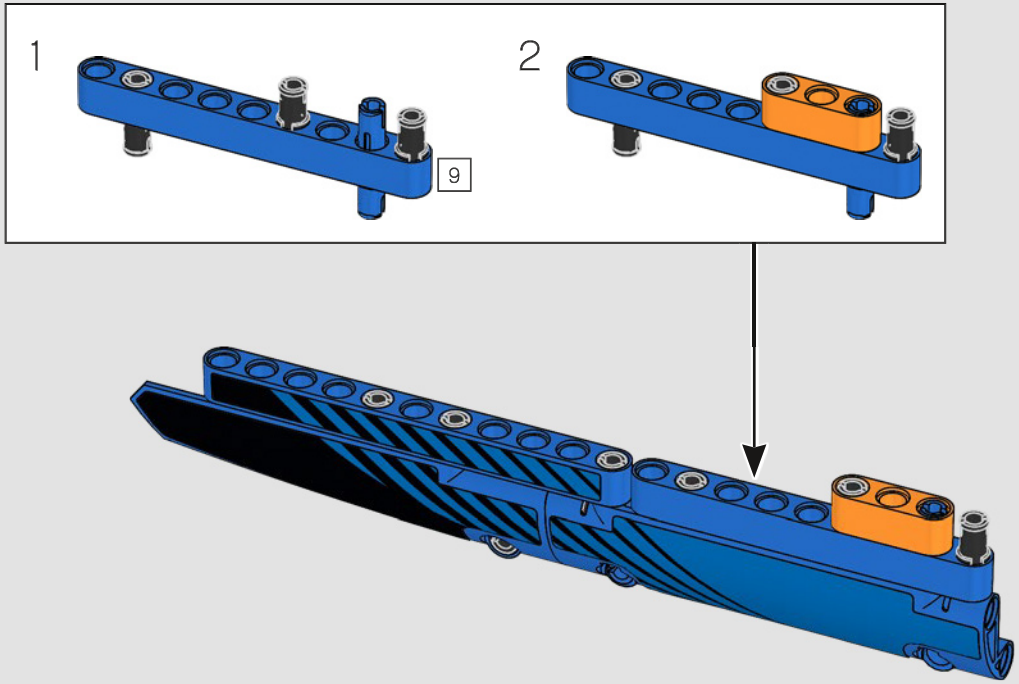

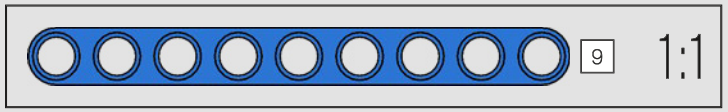

1x

206

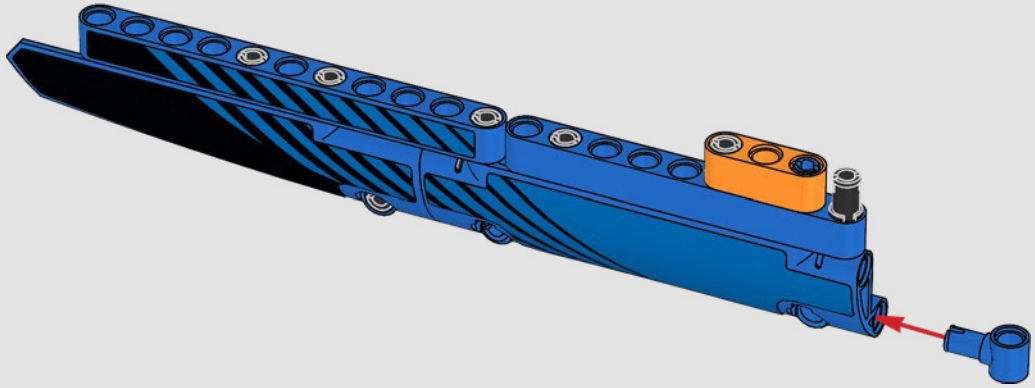

1x 1x

207

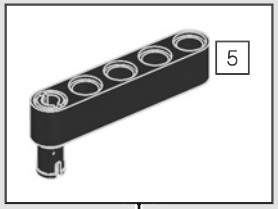

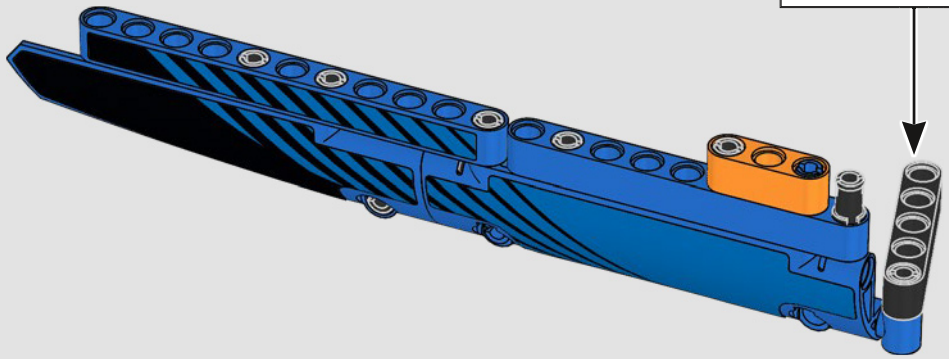

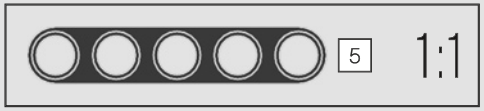

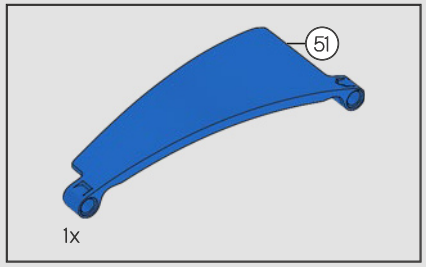

208

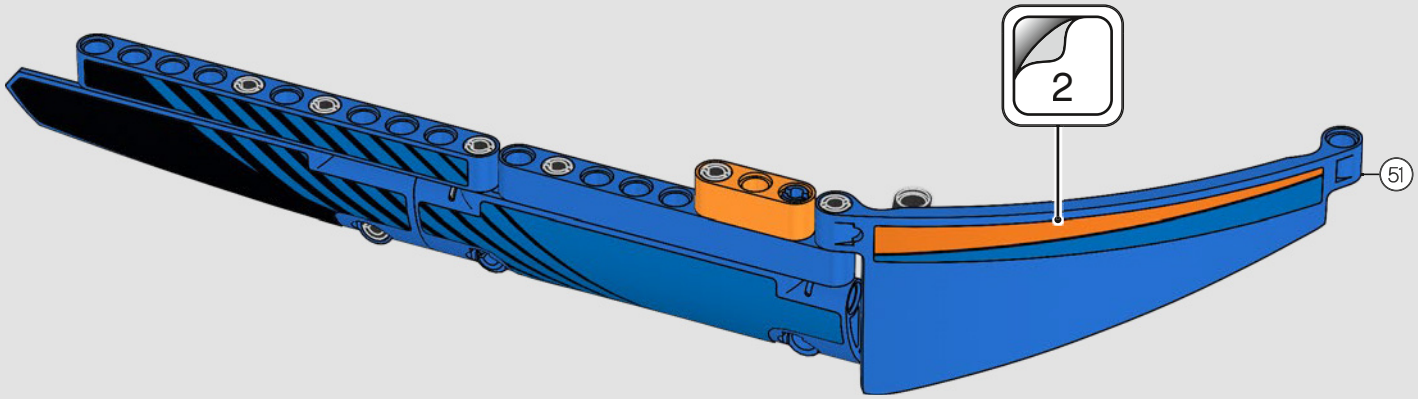

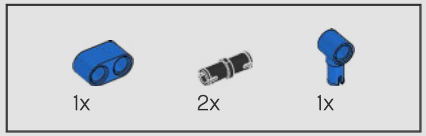

209

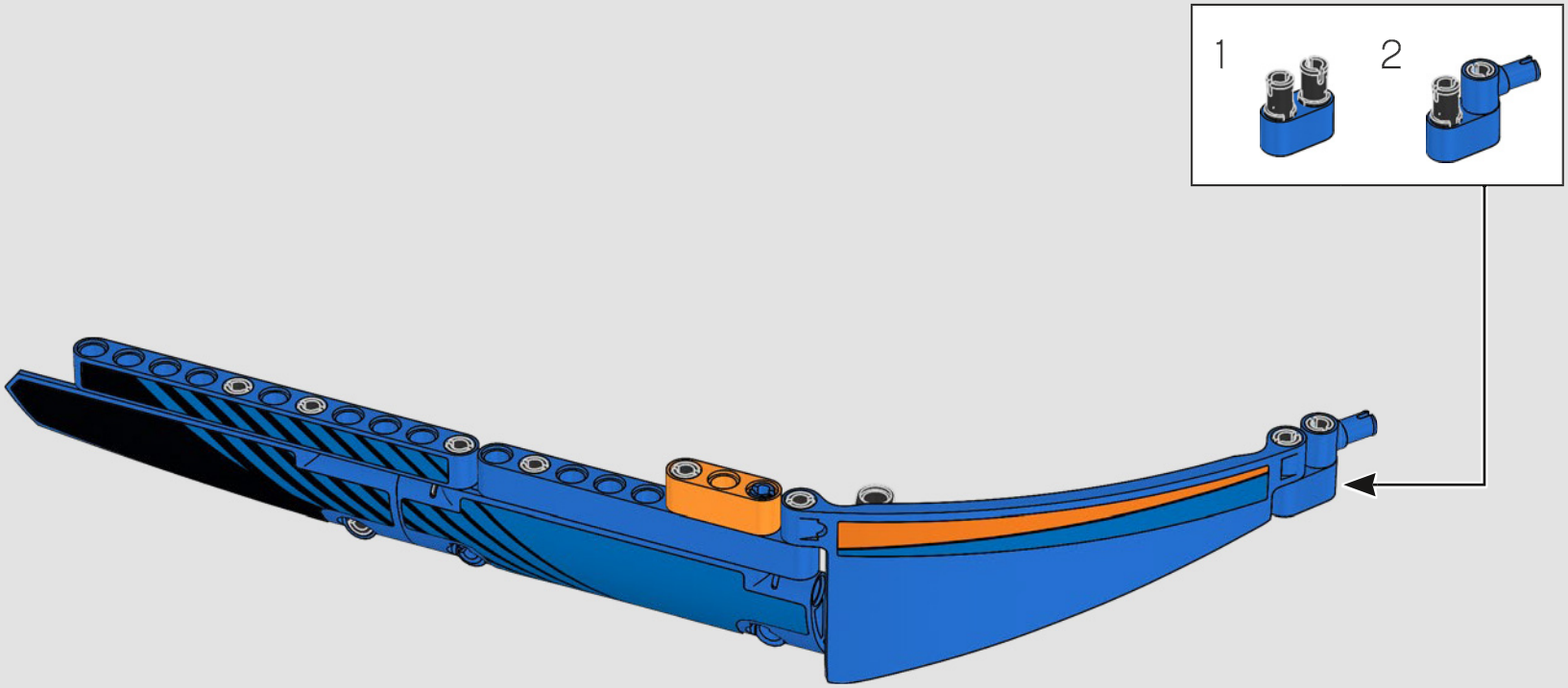

210

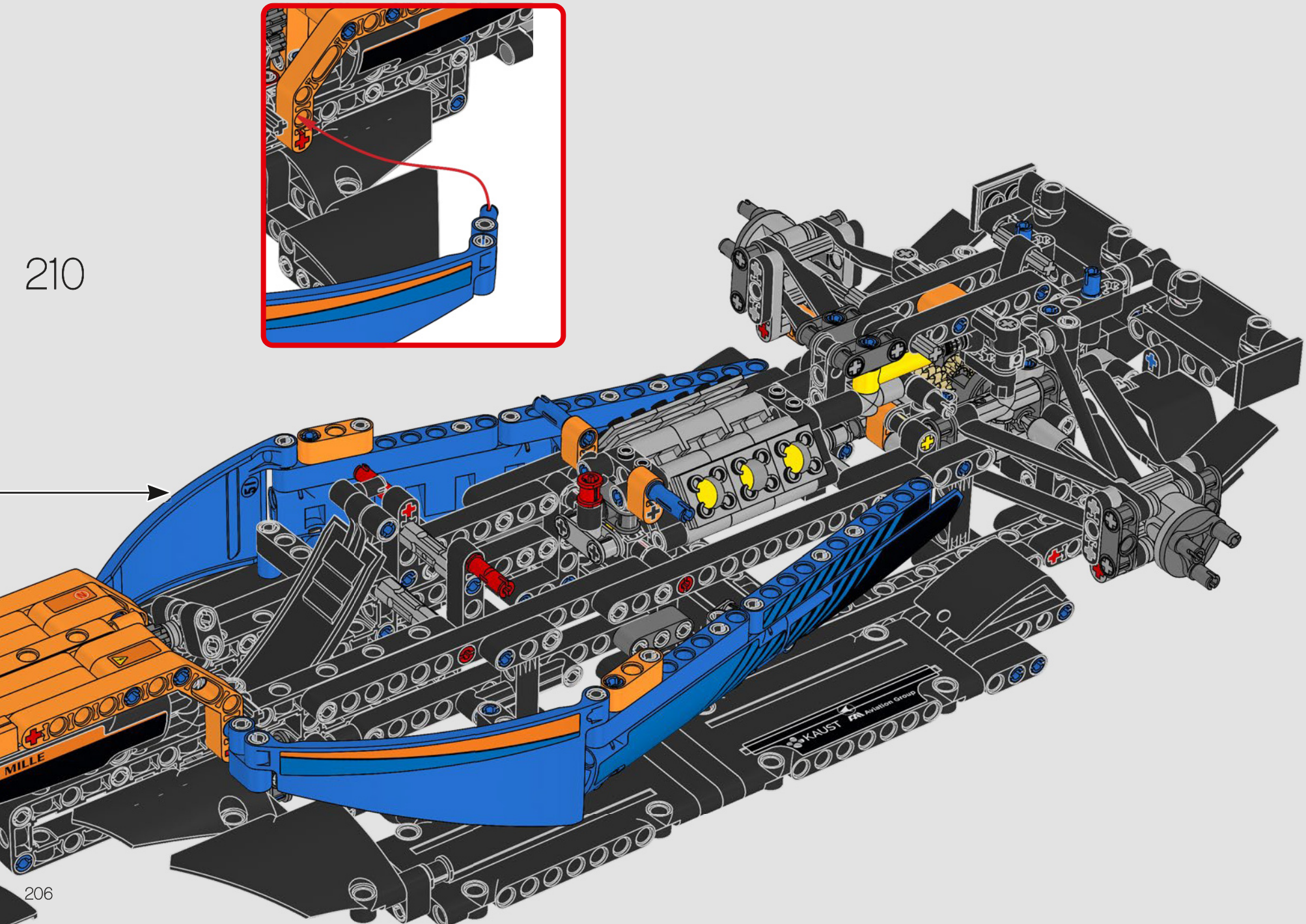

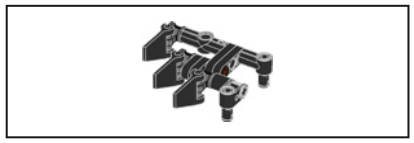

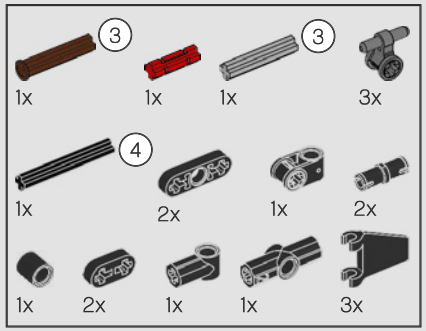

211

1

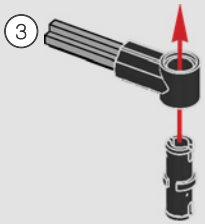

2

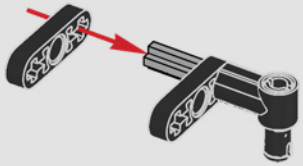

3

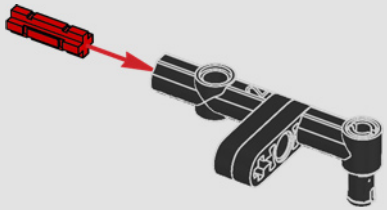

4

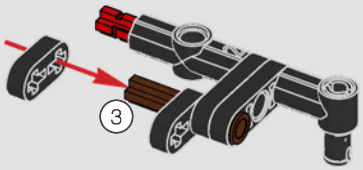

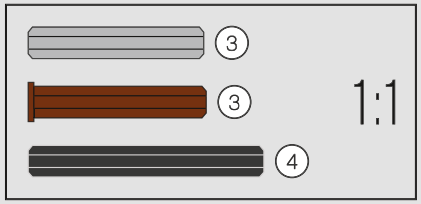

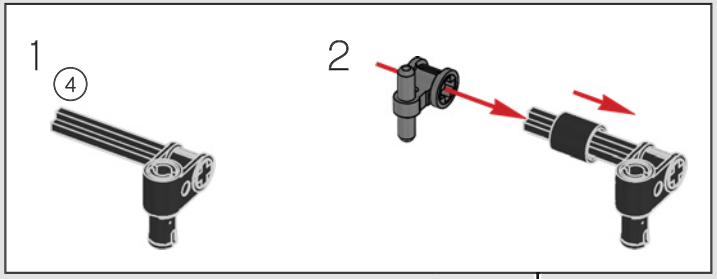

5

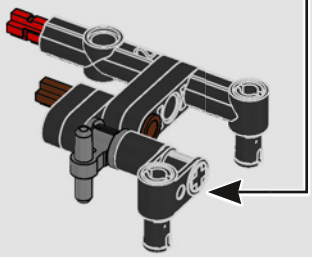

6

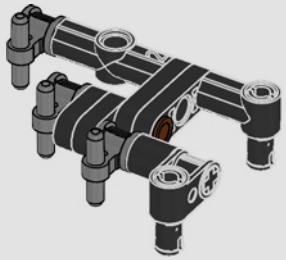

7

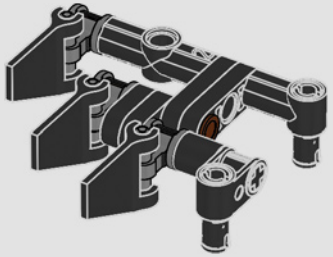

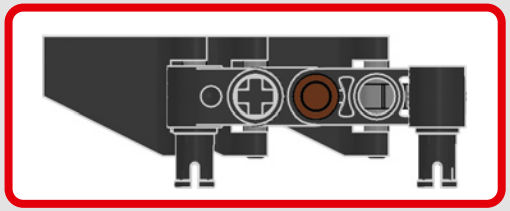

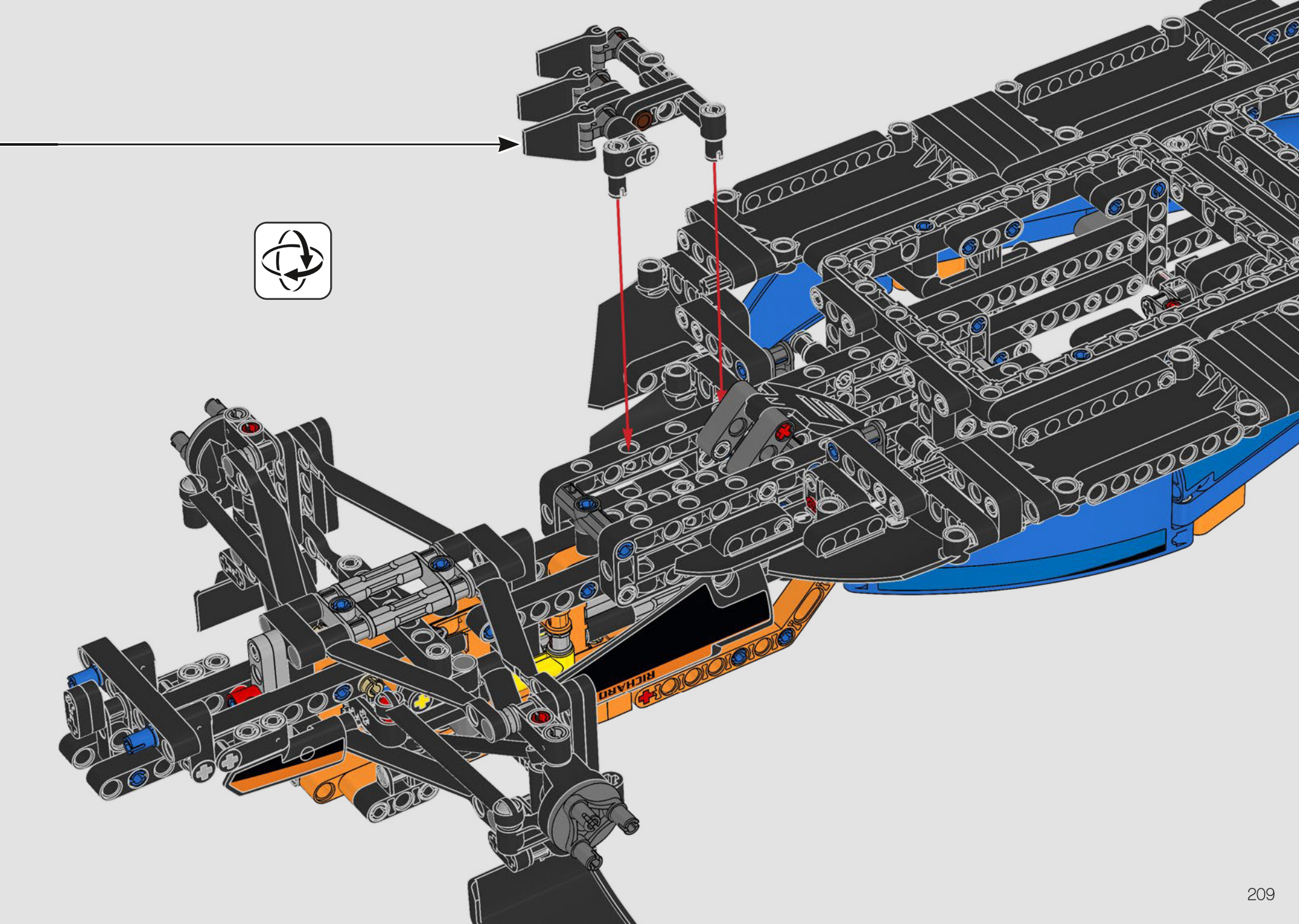
RICHARD

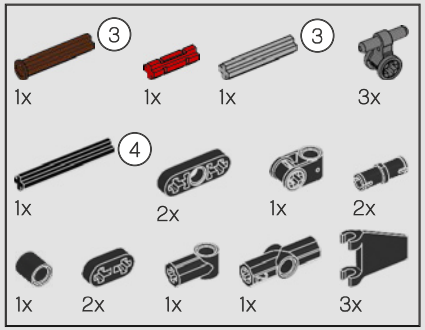

212

1

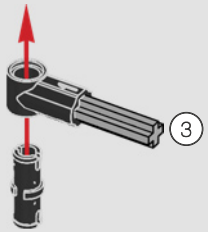

2

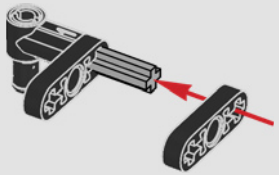

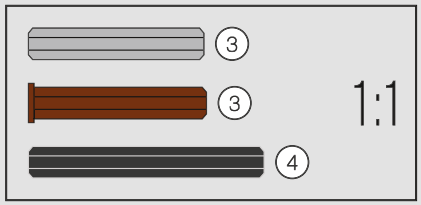

3

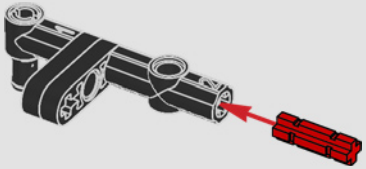

4

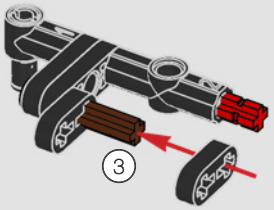

5

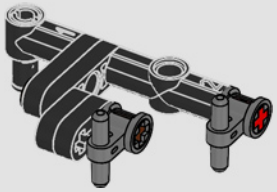

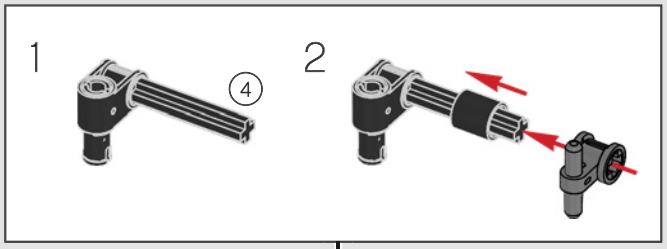

6

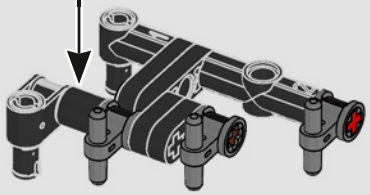

7

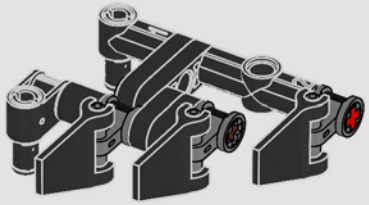

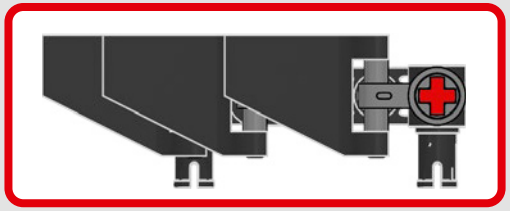

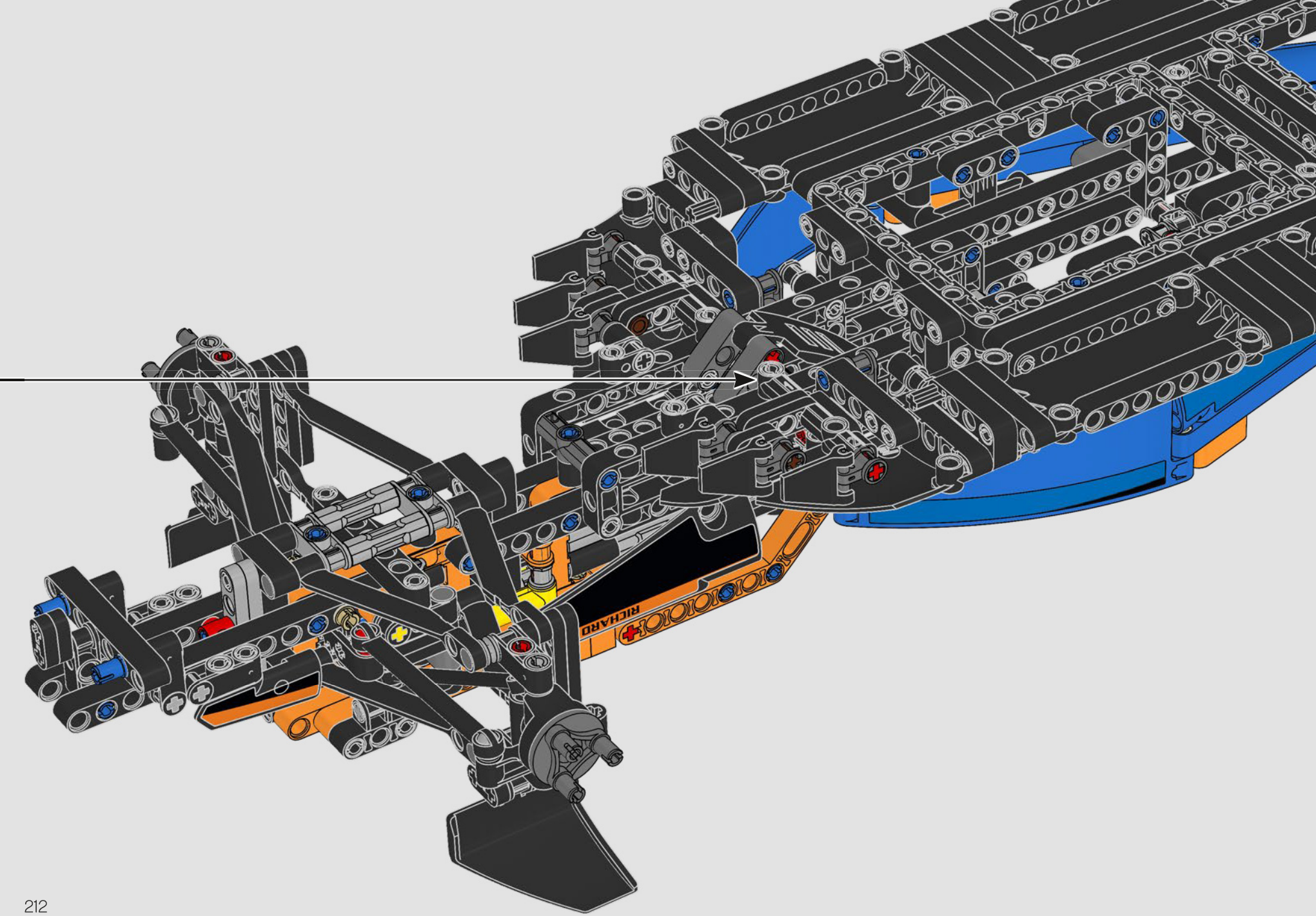
RICHARD

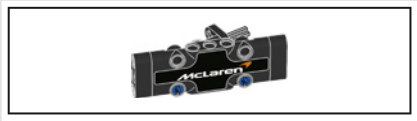

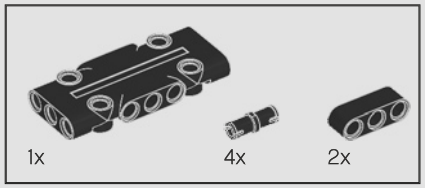

213

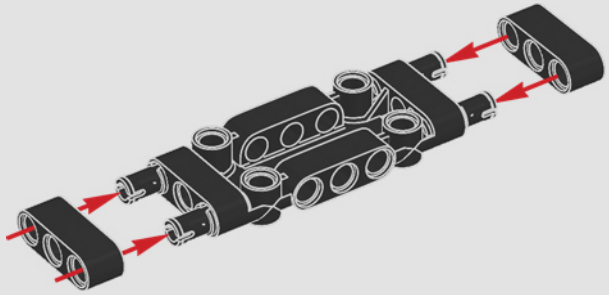

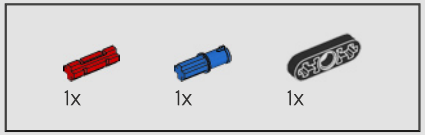

214

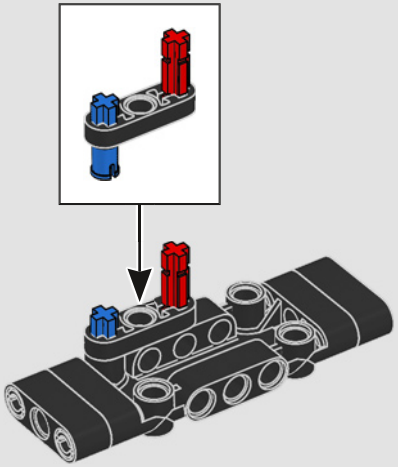

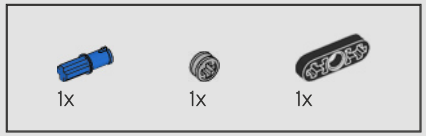

215

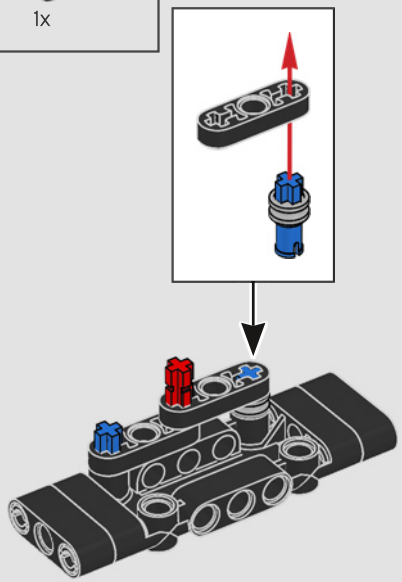

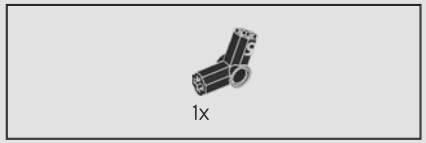

216

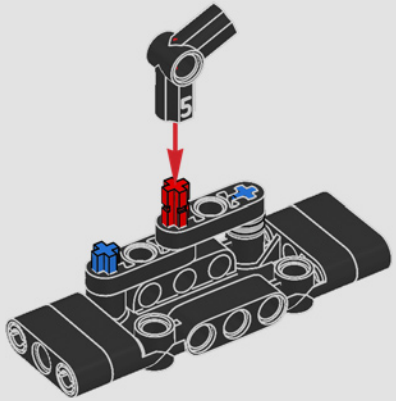

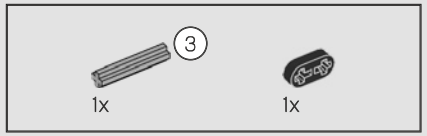

217

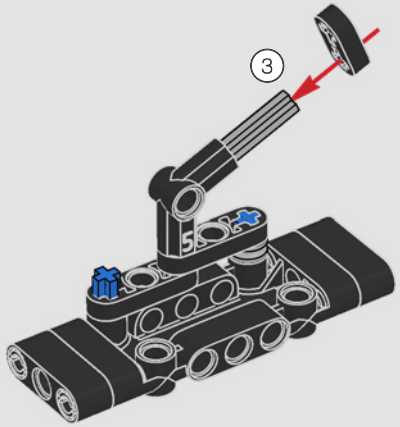

218

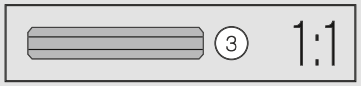

219

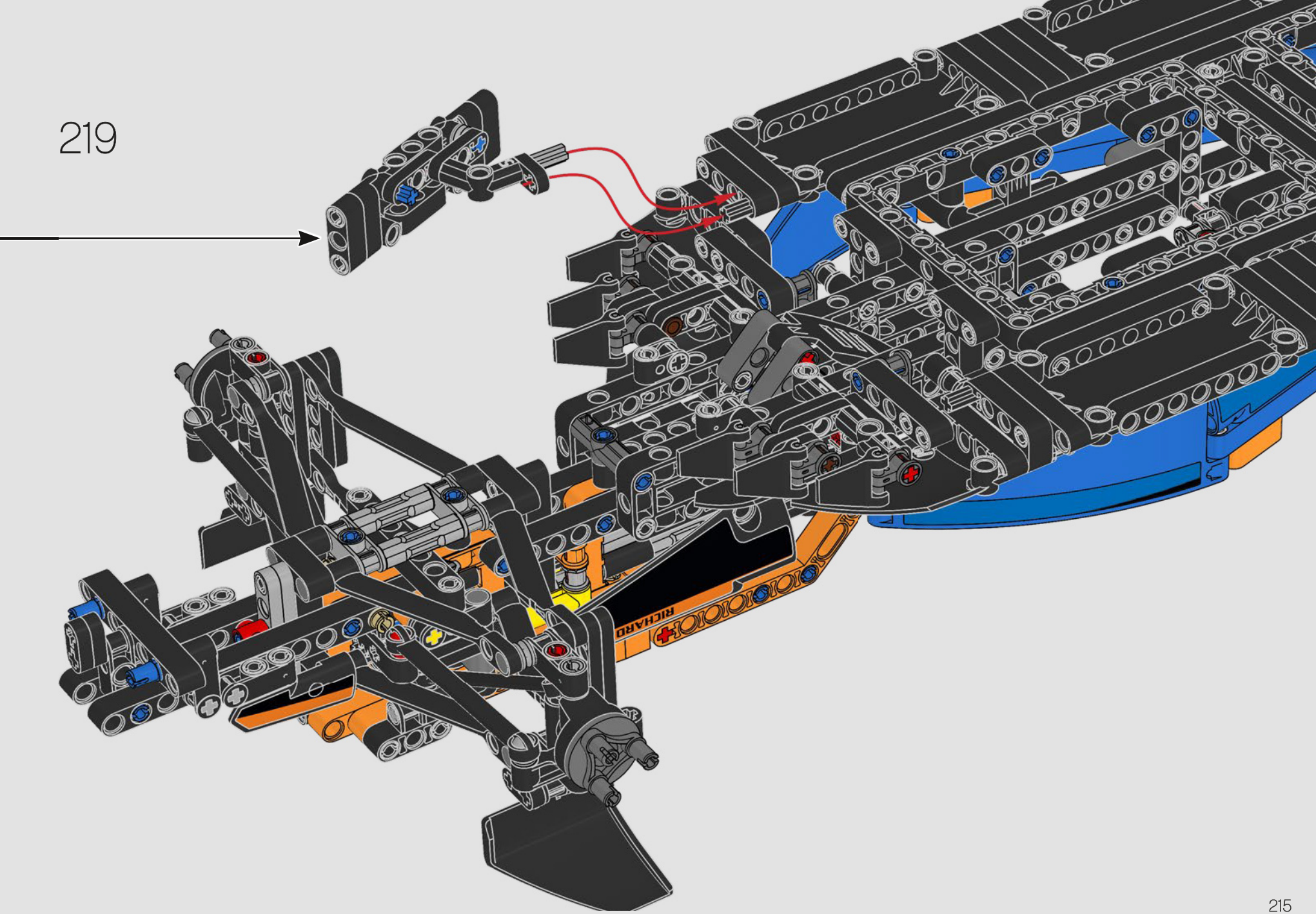

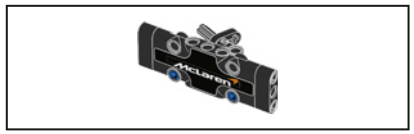

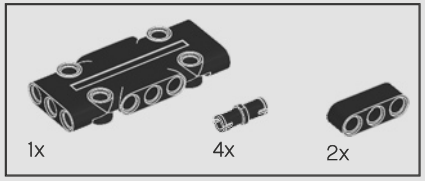

220

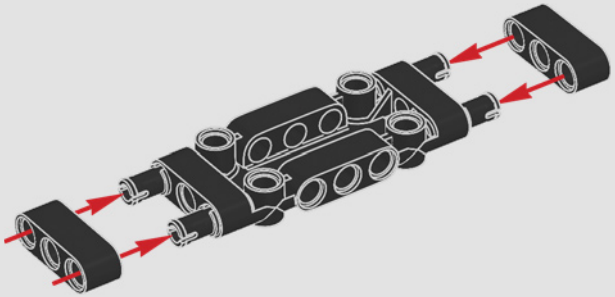

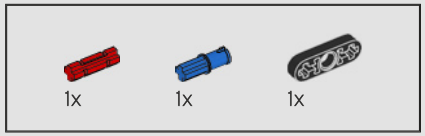

221

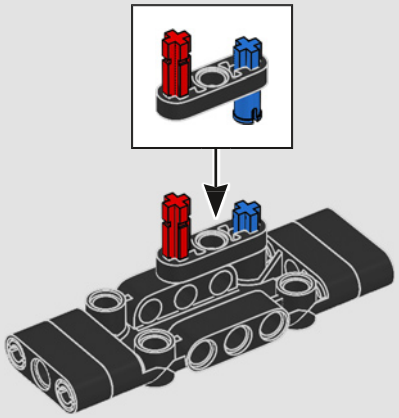

222

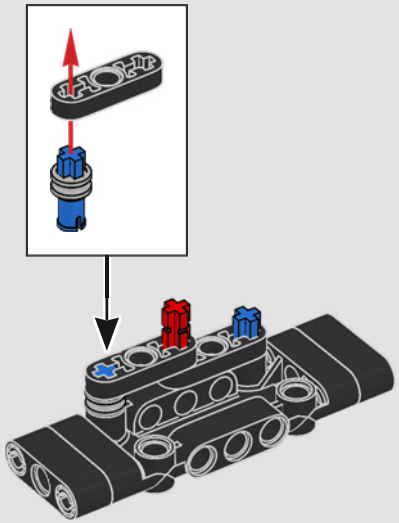

1x

223

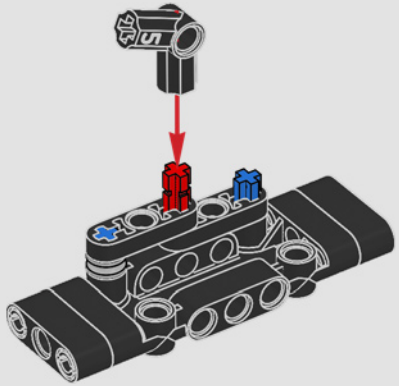

3

1x

1x

224

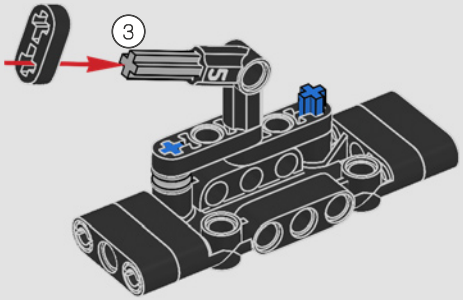

3

225

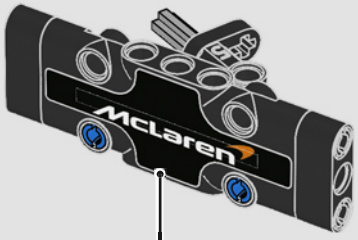

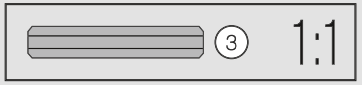

226

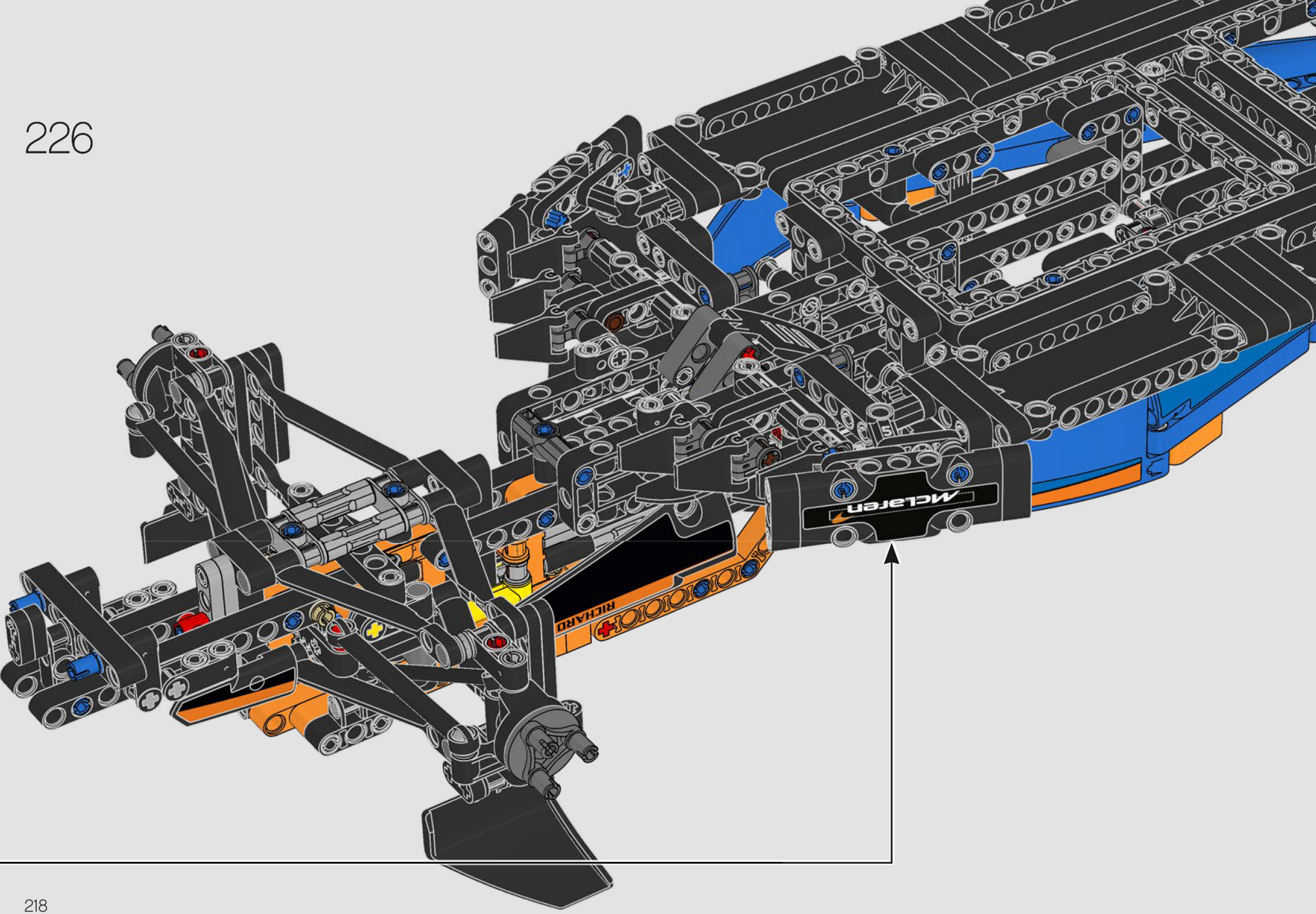

2x

227

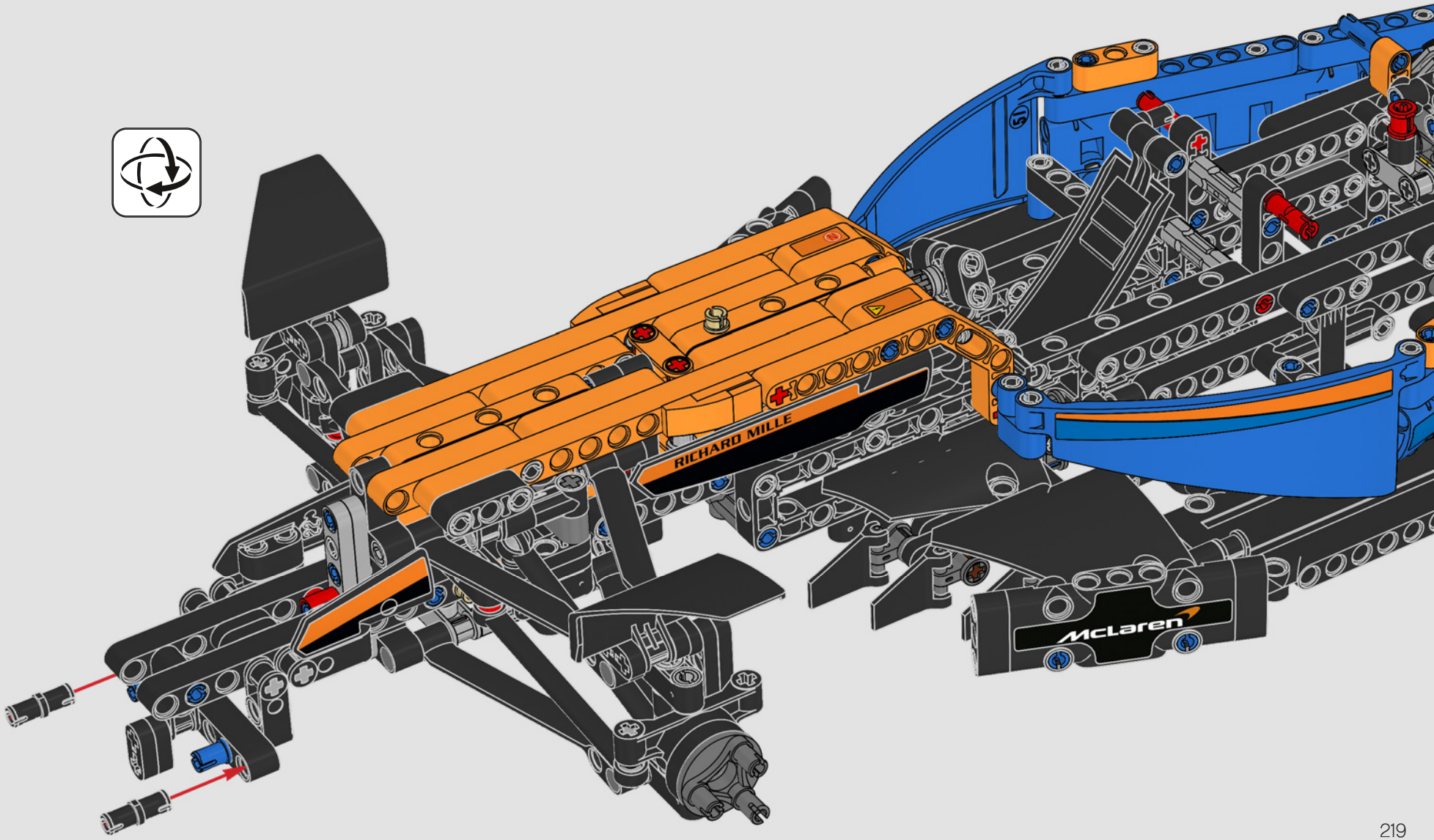

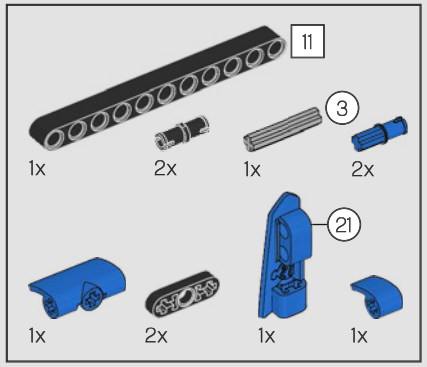

228

1

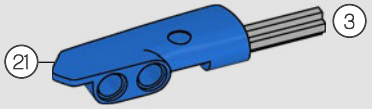

2

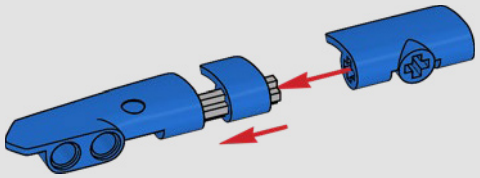

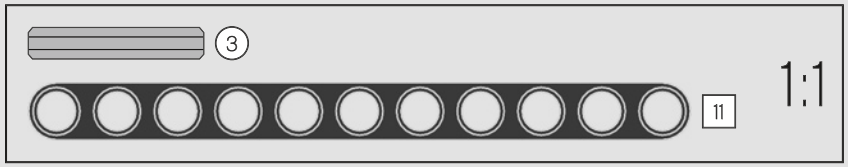

3

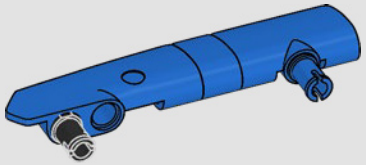

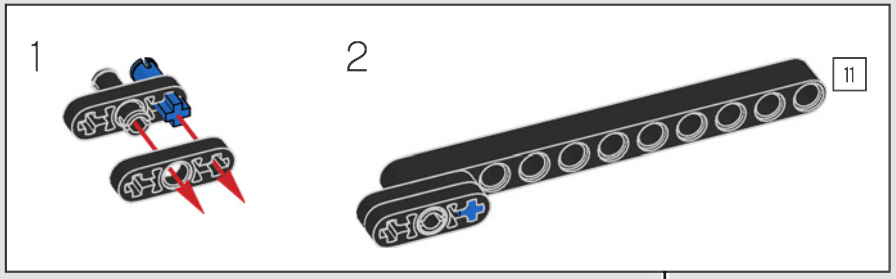

4

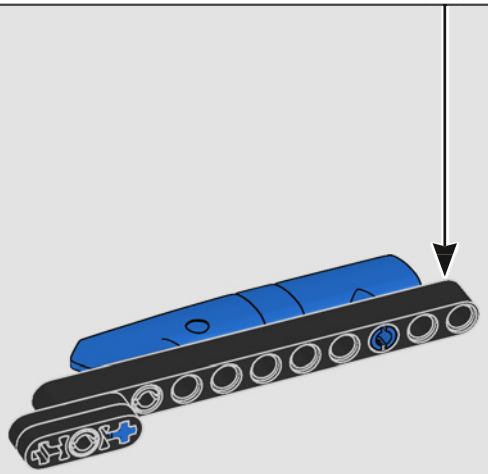

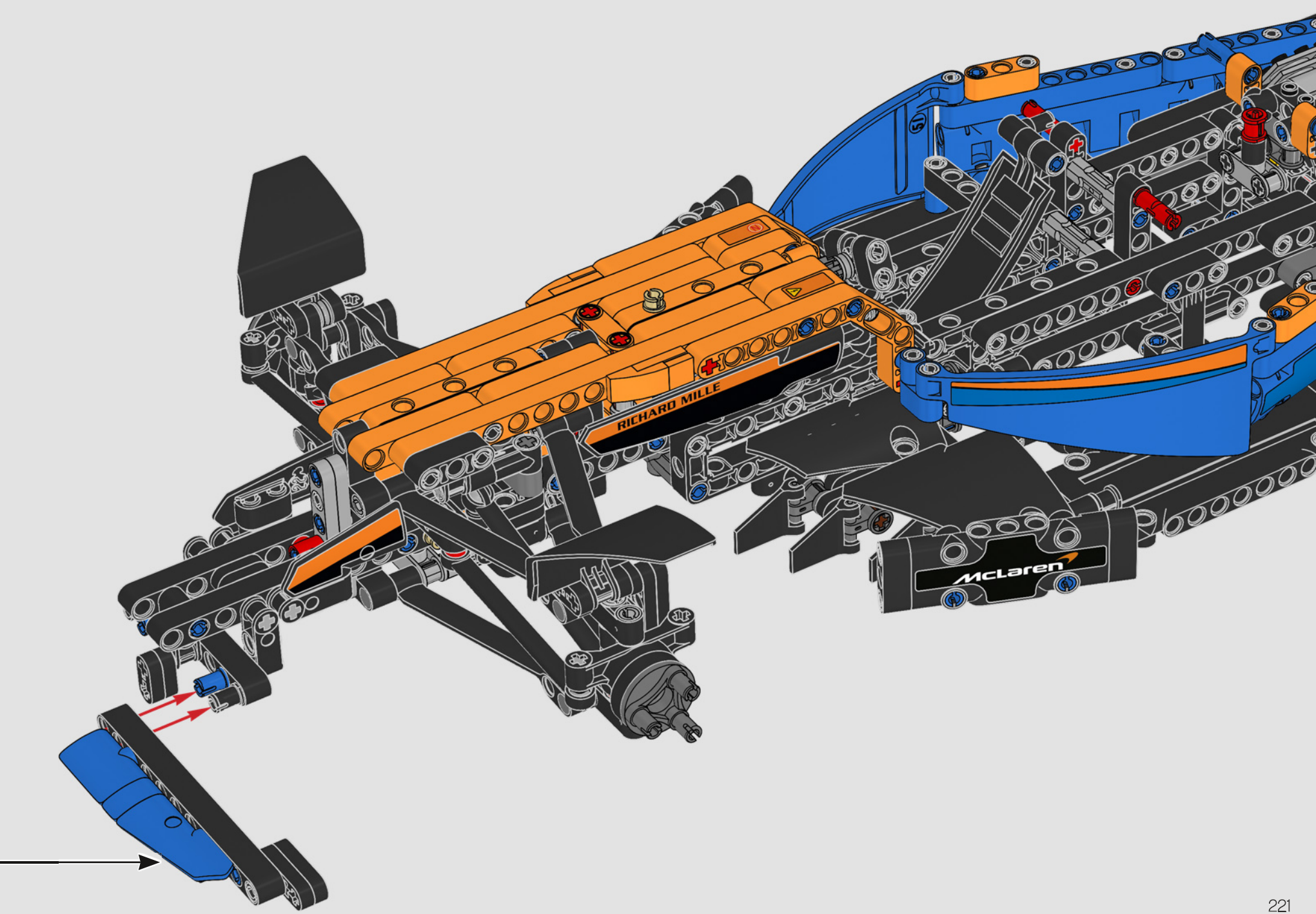
RICHARD MILLE
McLaren

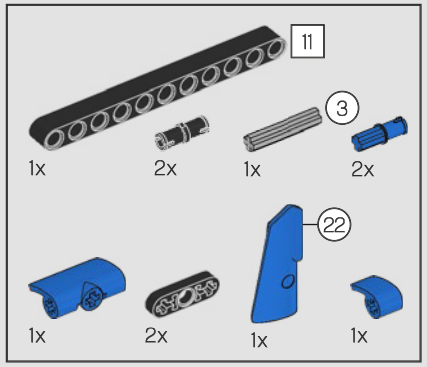

229

1

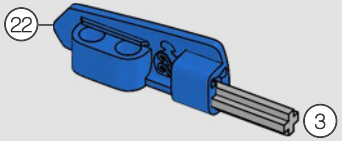

2

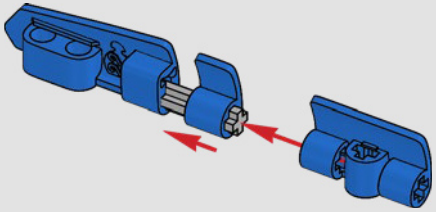

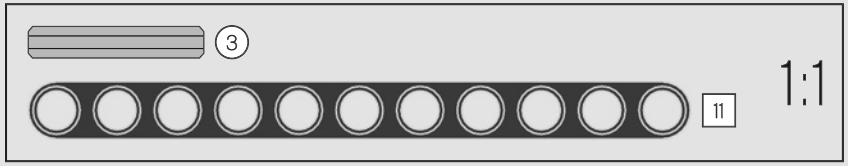

3

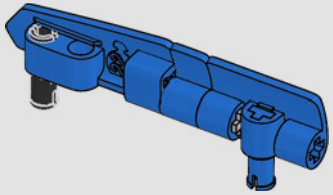

4

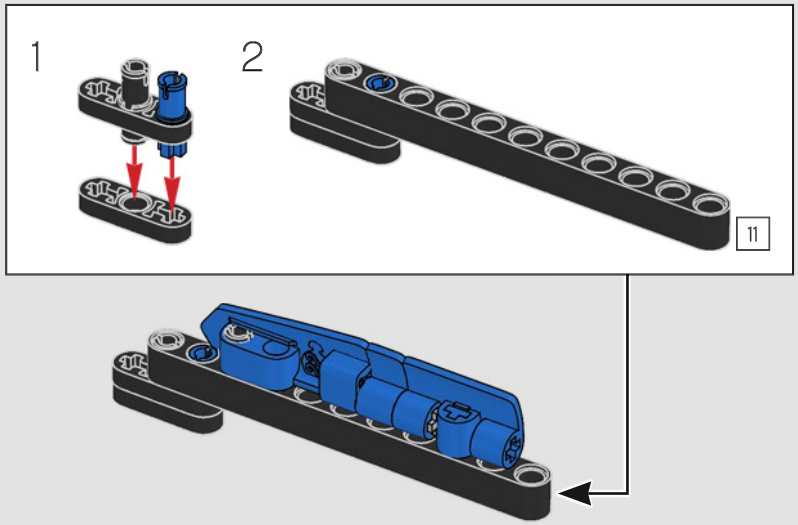

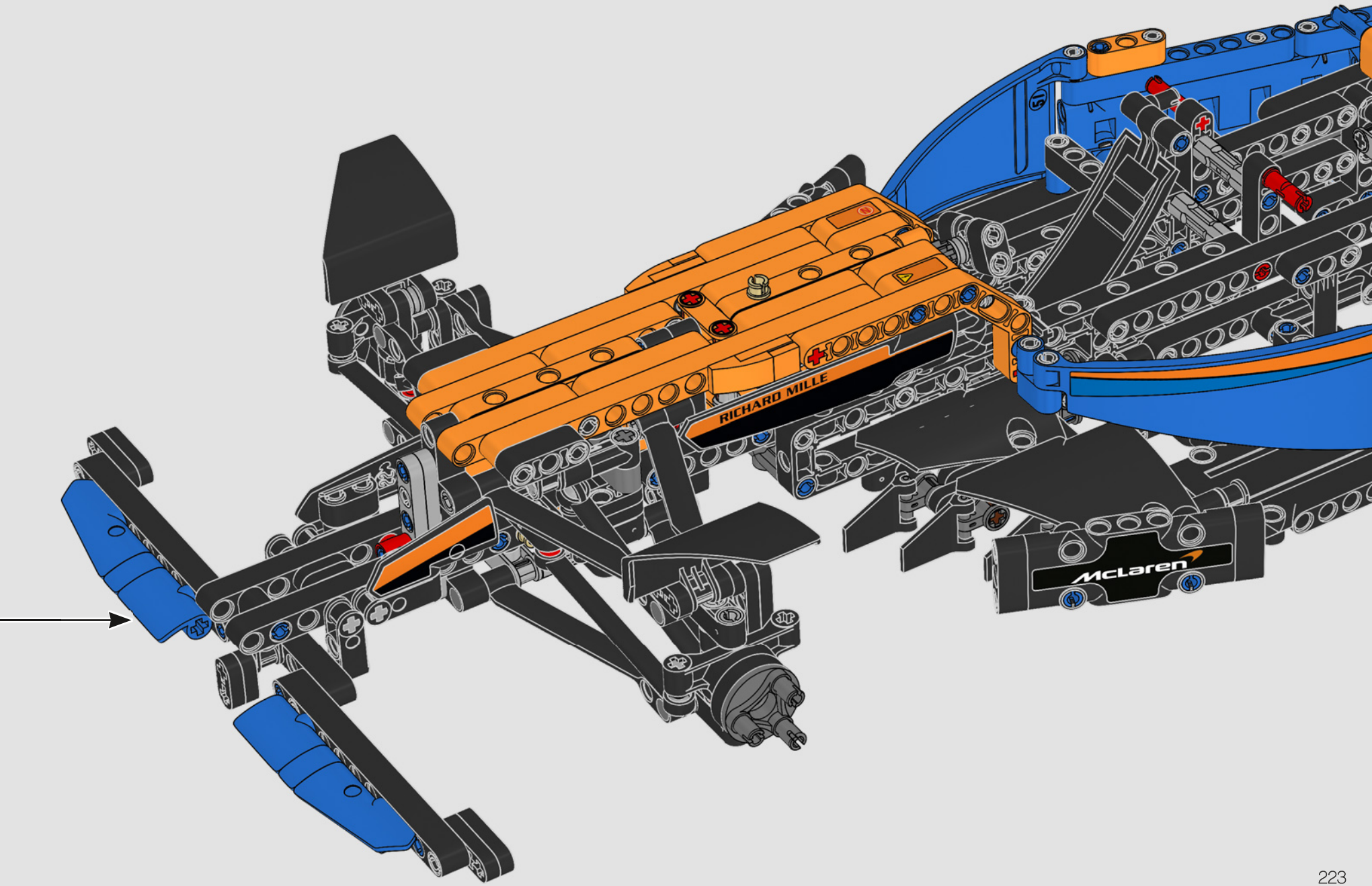
RICHARD MILLE
McLaren

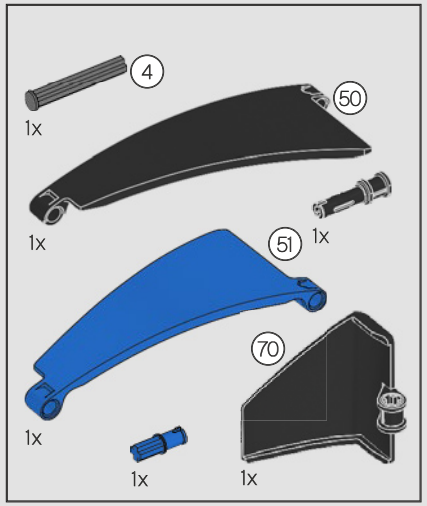

230

1

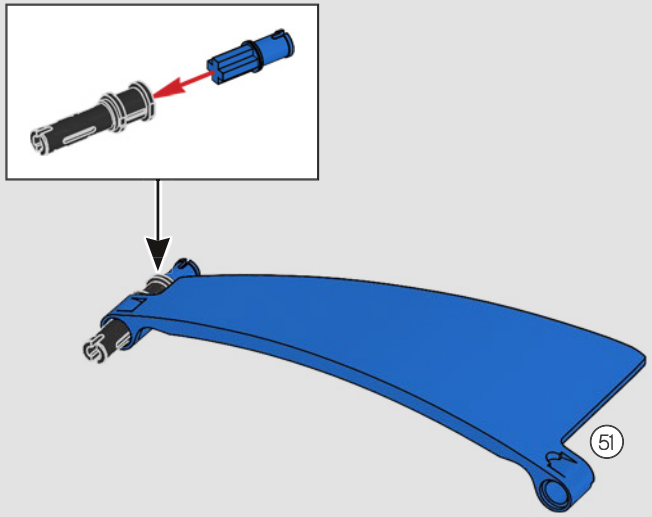

2

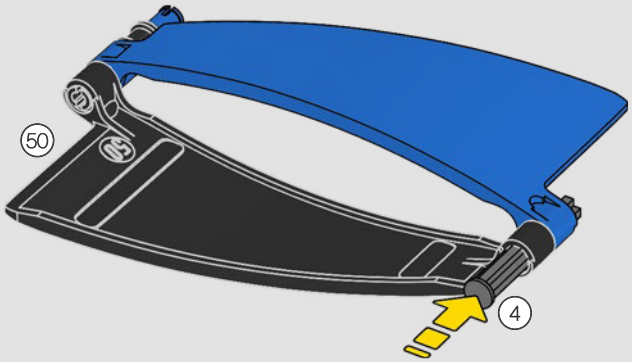

3

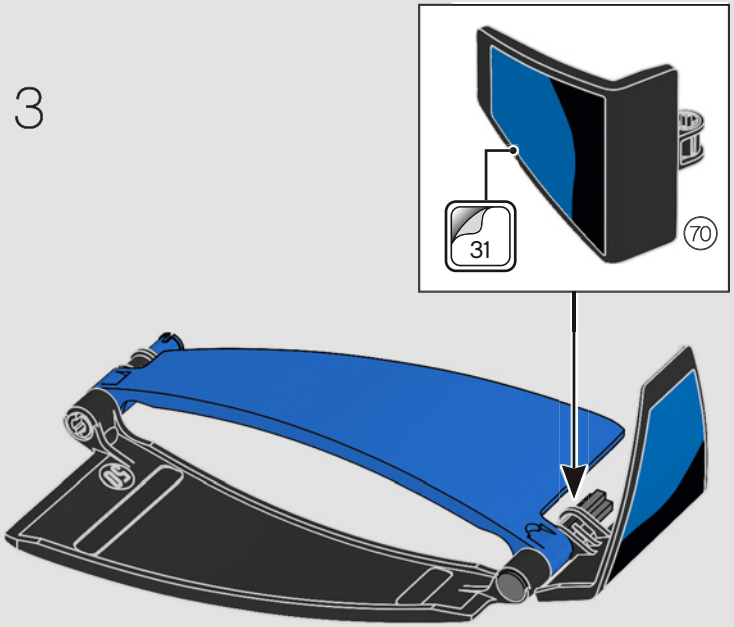

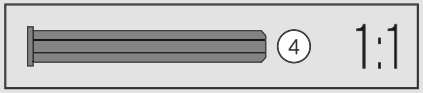

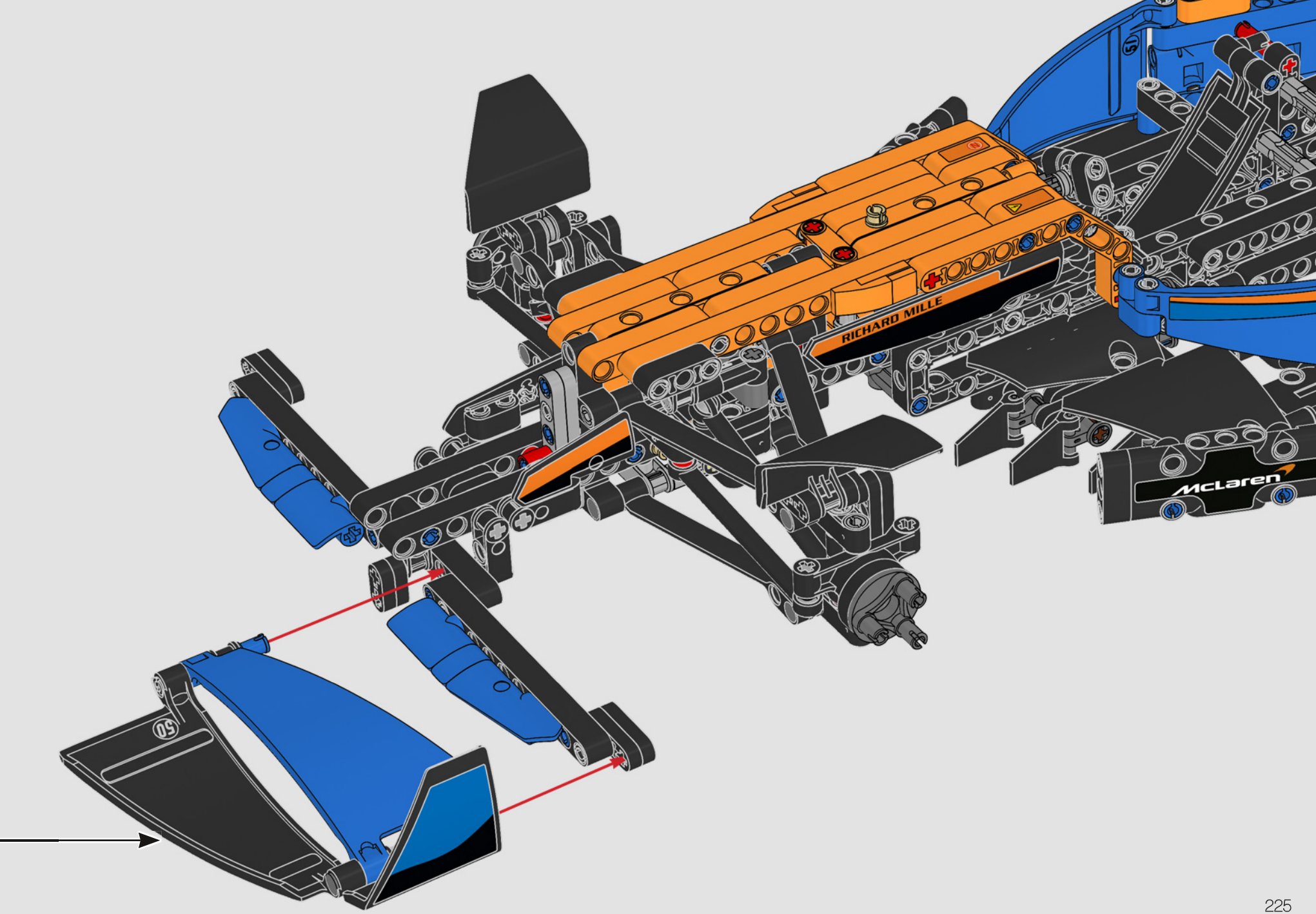
RICHARD MILLE
McLaren

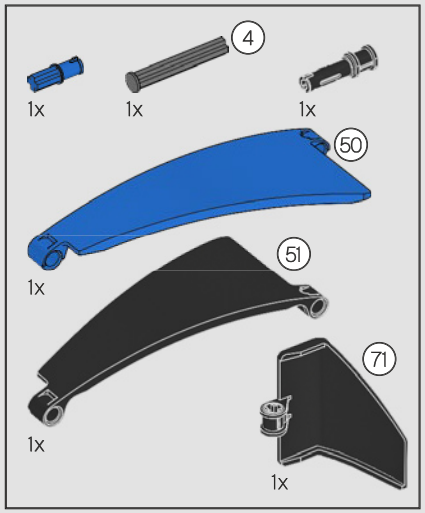

231

1

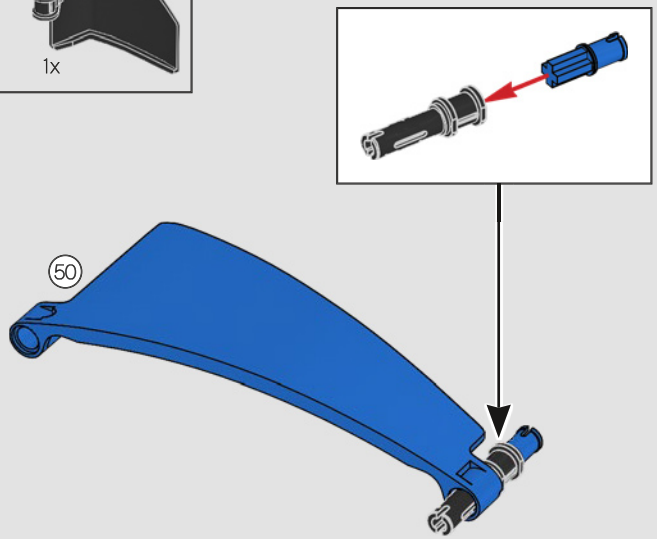

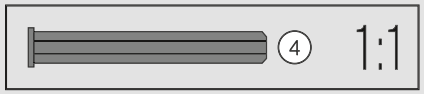

2

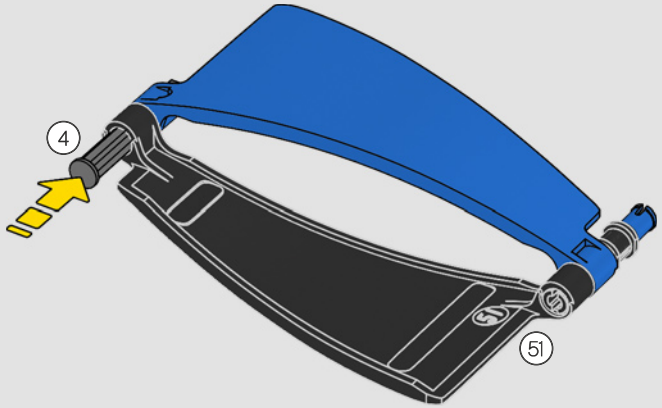

3

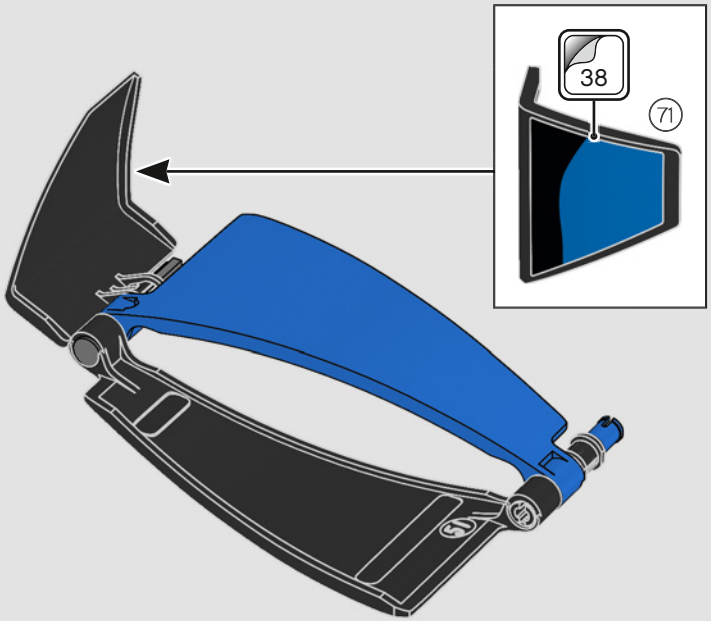

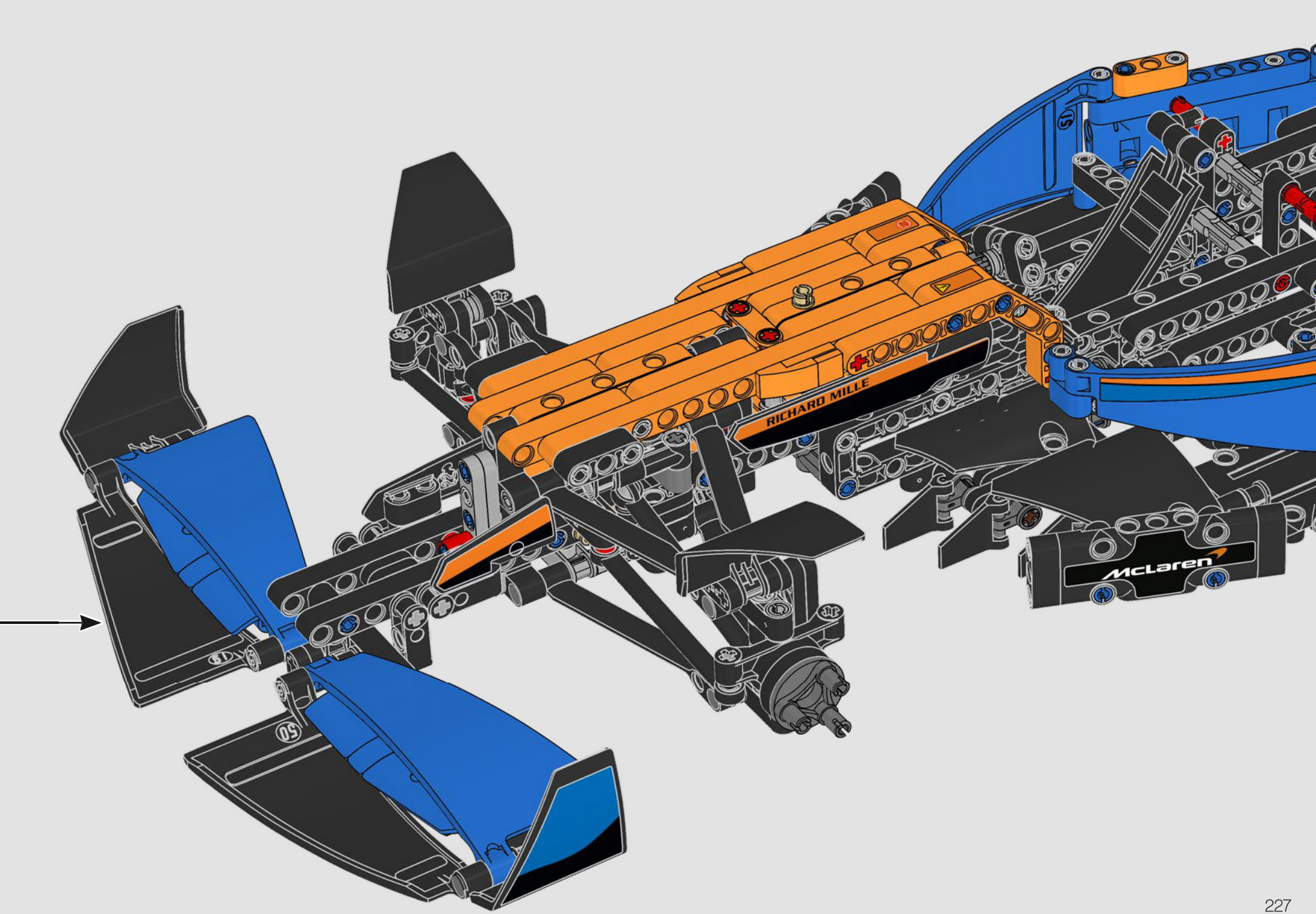
RICHARD MILLE
McLaren

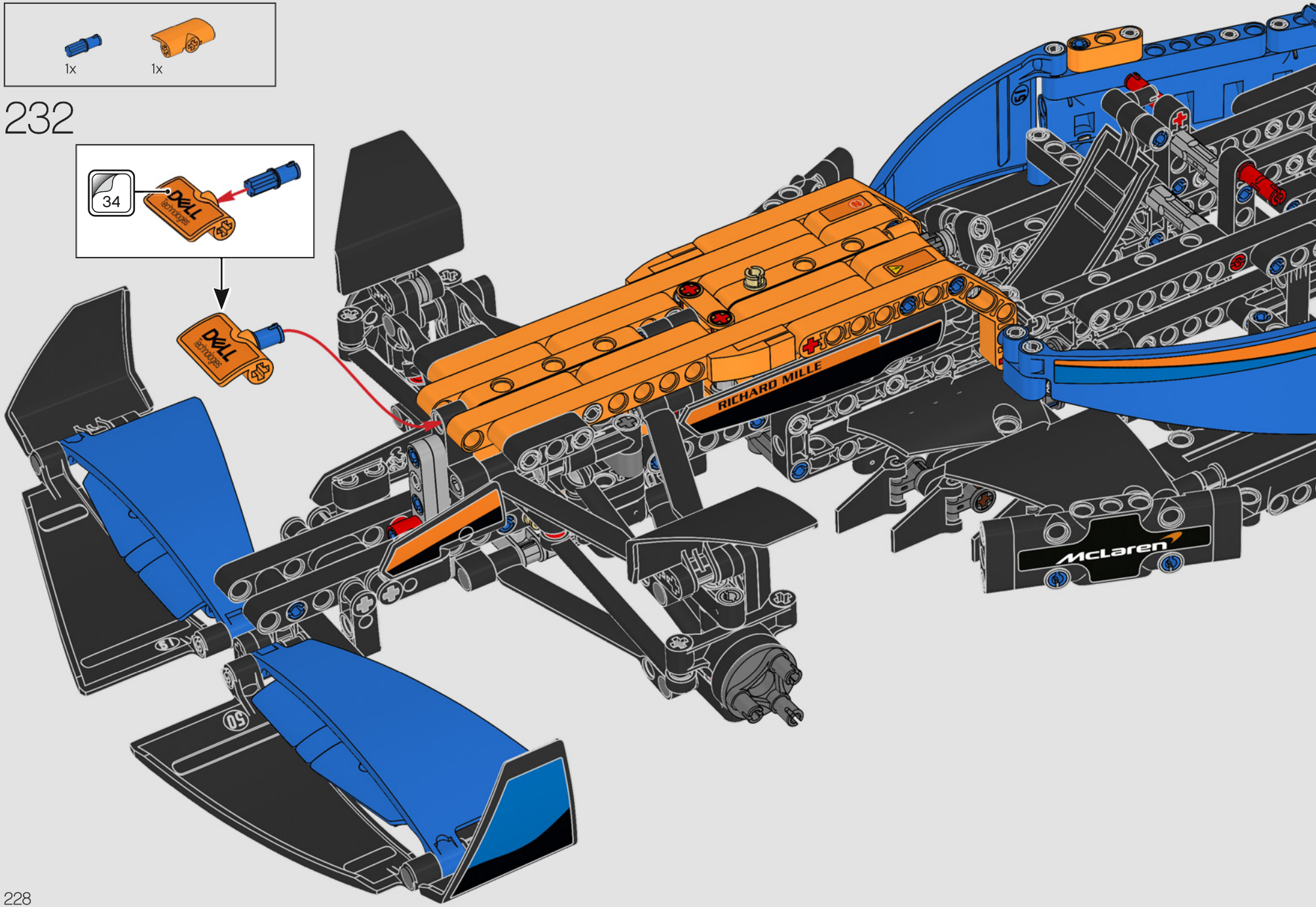
1x
1x
232
34
DELL
technologies
RICHARD MILLE
McLaren

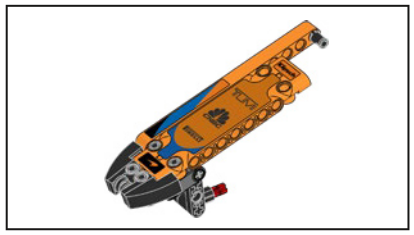

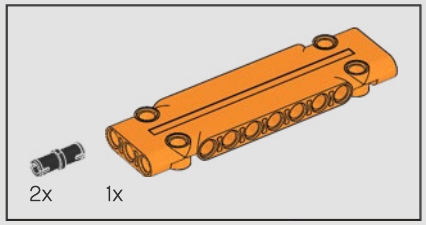

233

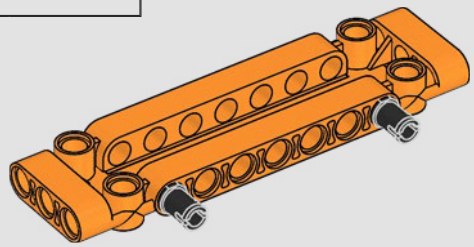

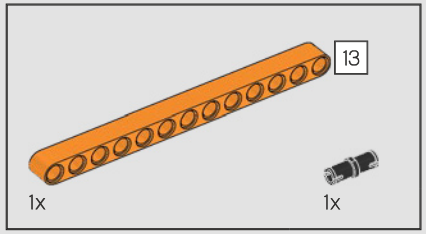

234

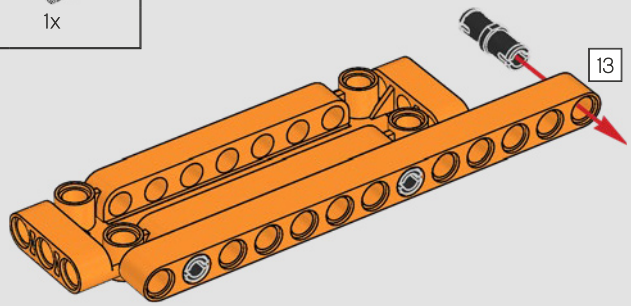

235

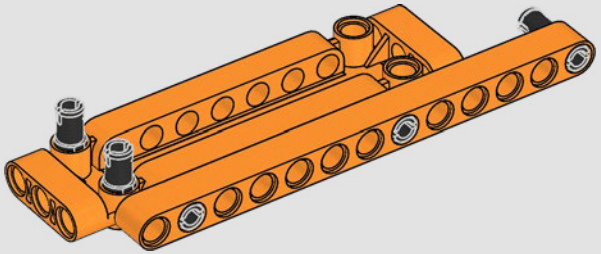

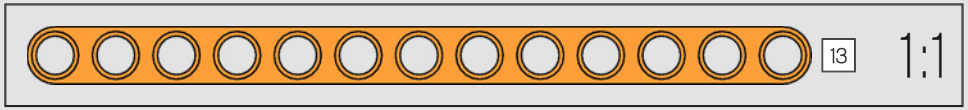

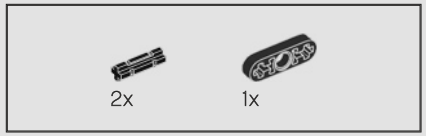

236

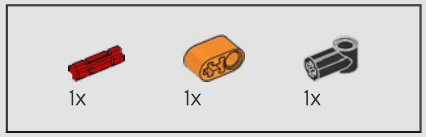

237

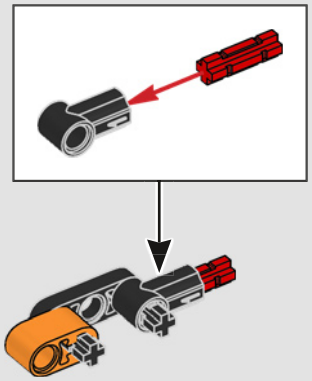

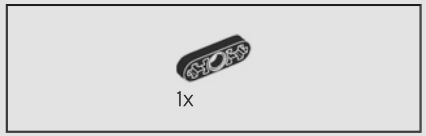

238

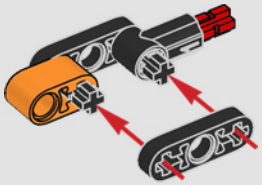

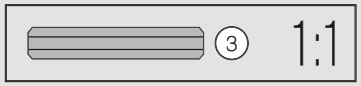

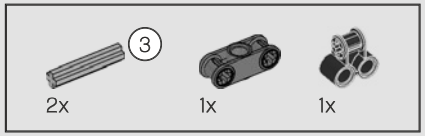

239

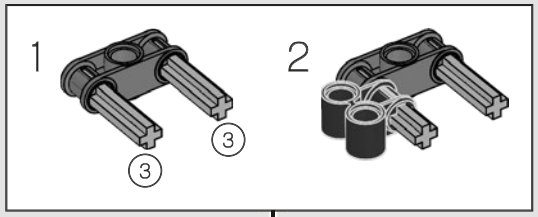

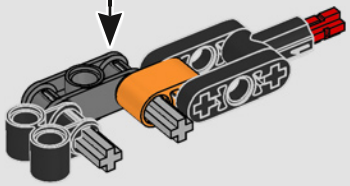

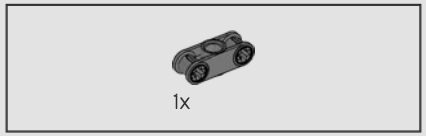

240

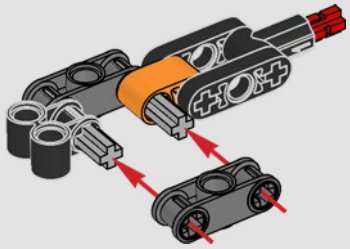

241

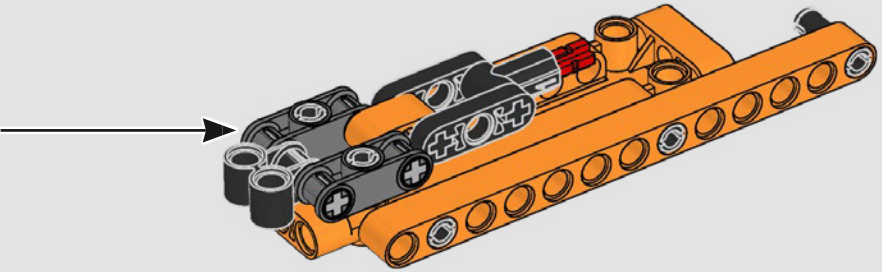

242

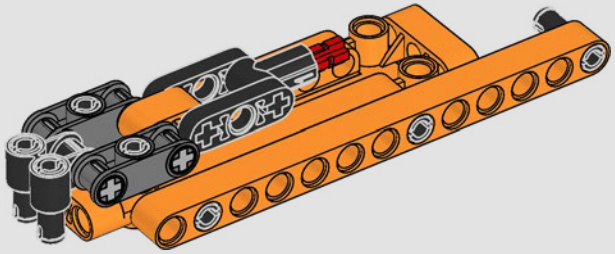

243

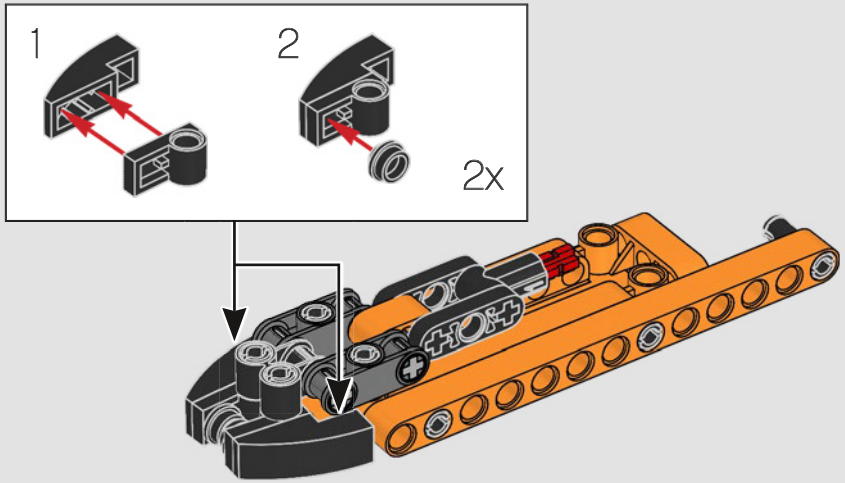

244

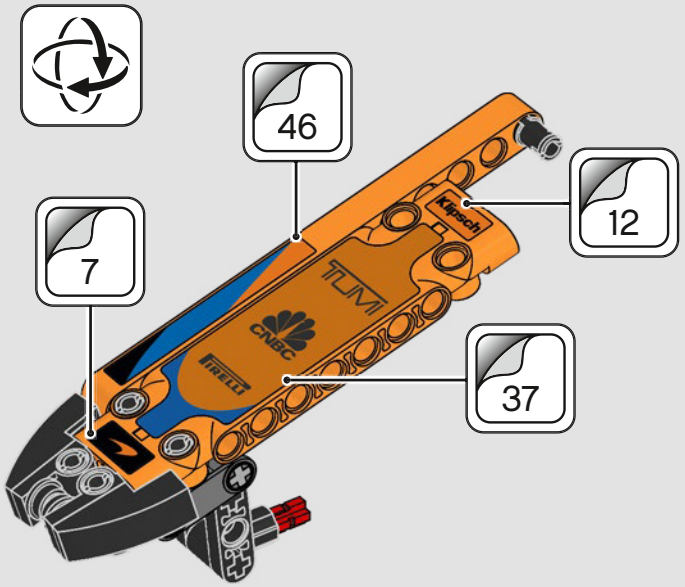

245

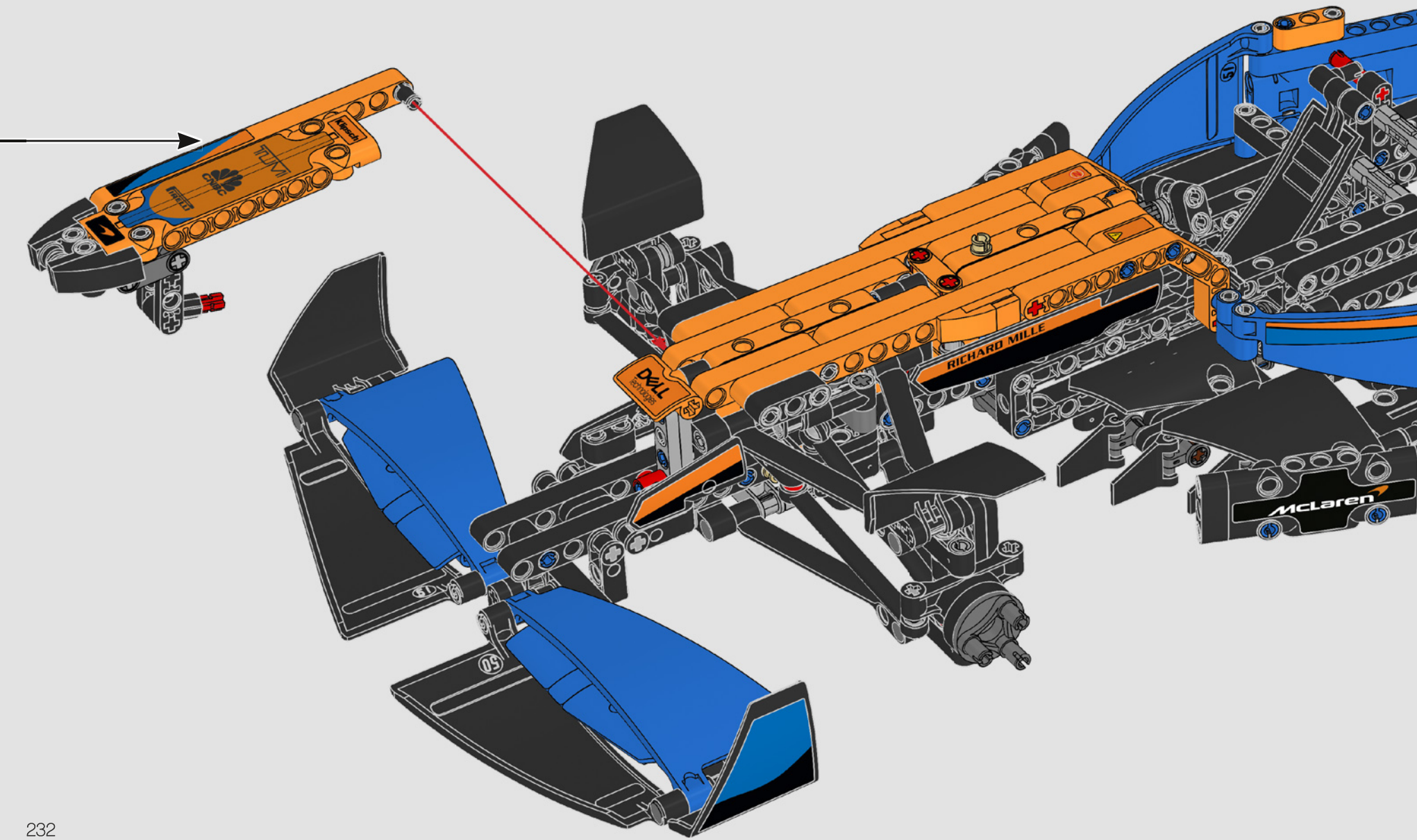

246

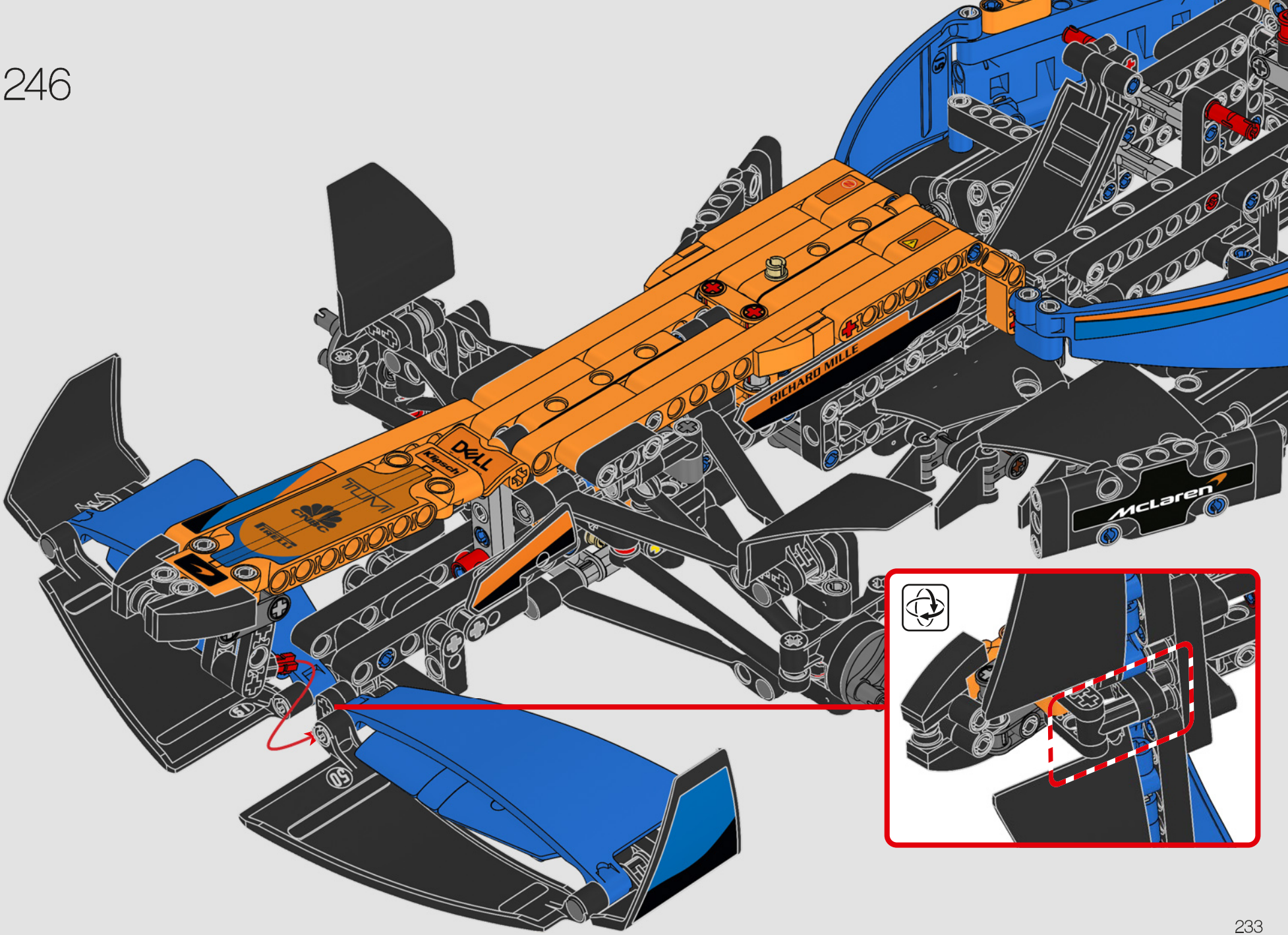

13
1x
3x

247

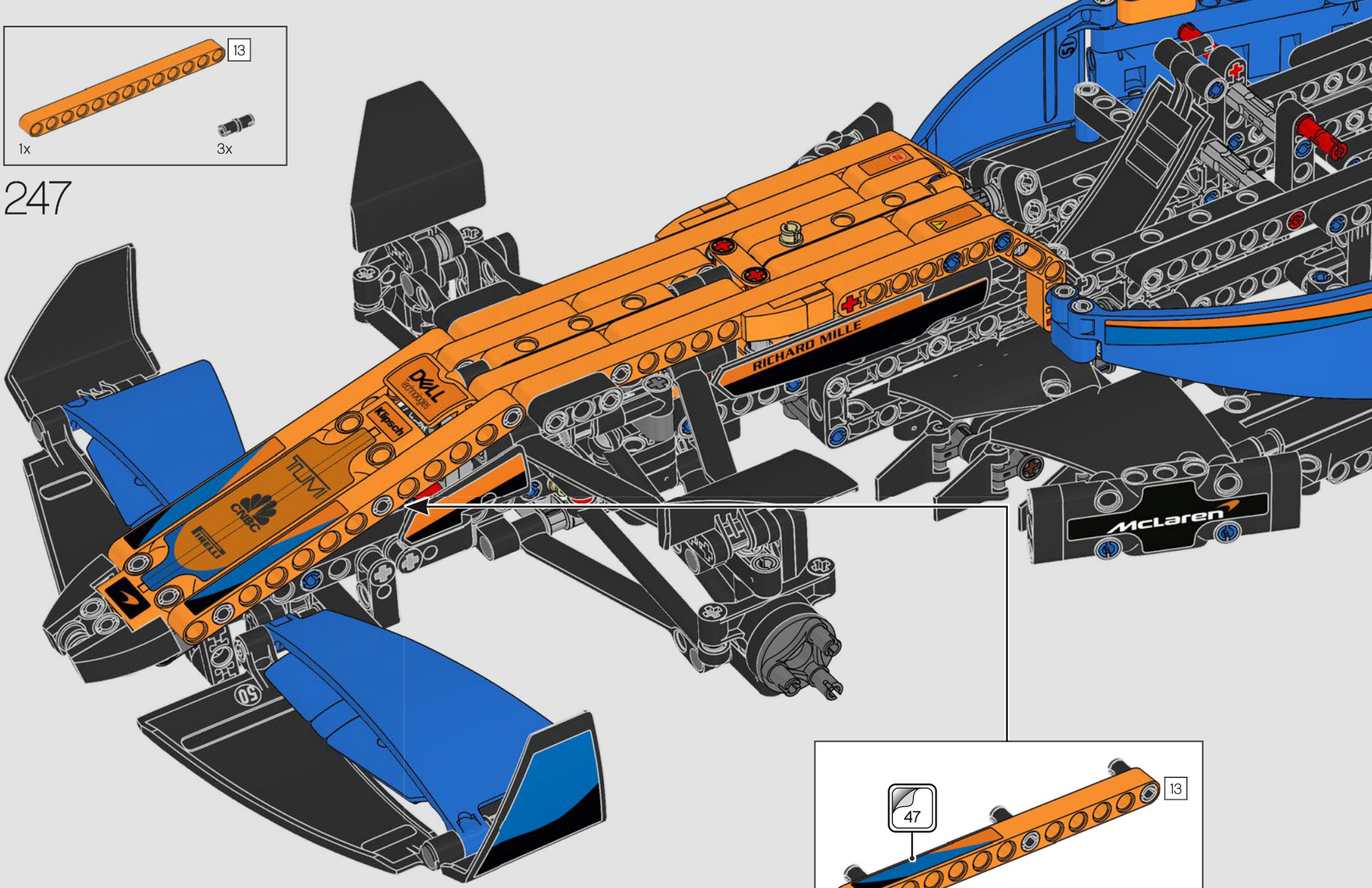
RICHARD MILLE
DELL
Klipsch
TUMI
CNBC
PIRELLI
McLaren

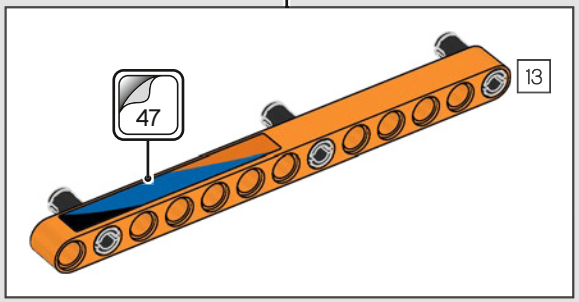
47
13

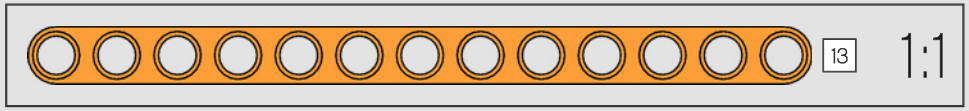
13
1:1

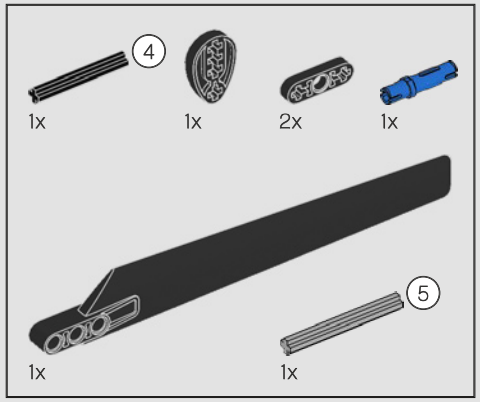

248

1

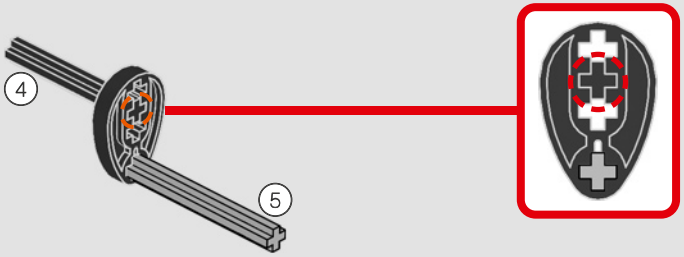

2

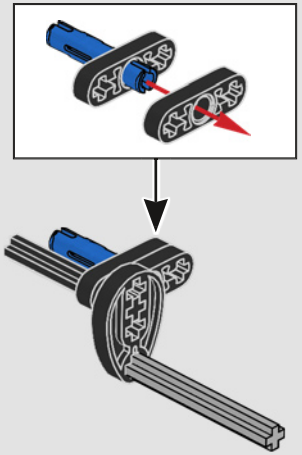

3

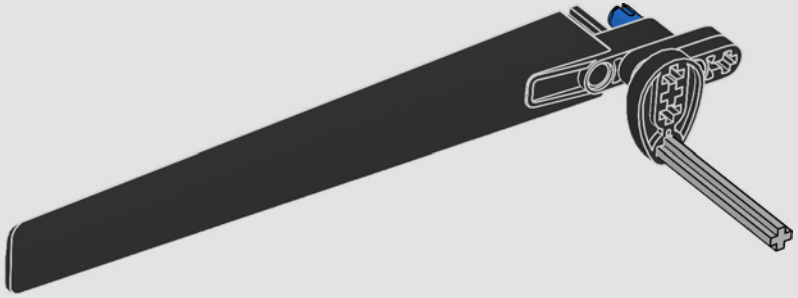

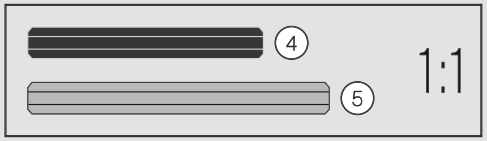

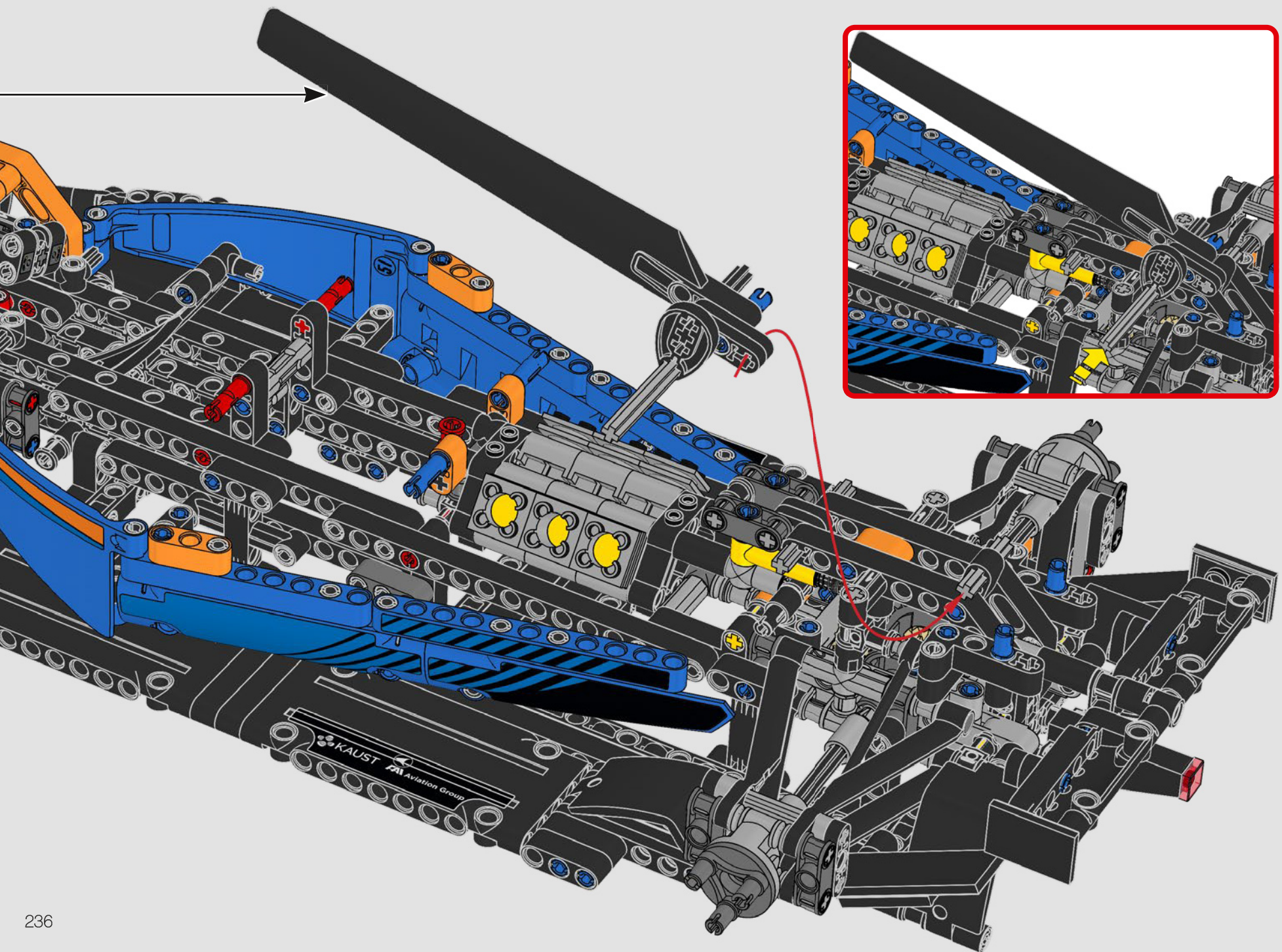
KAUST
Aviation Group

249

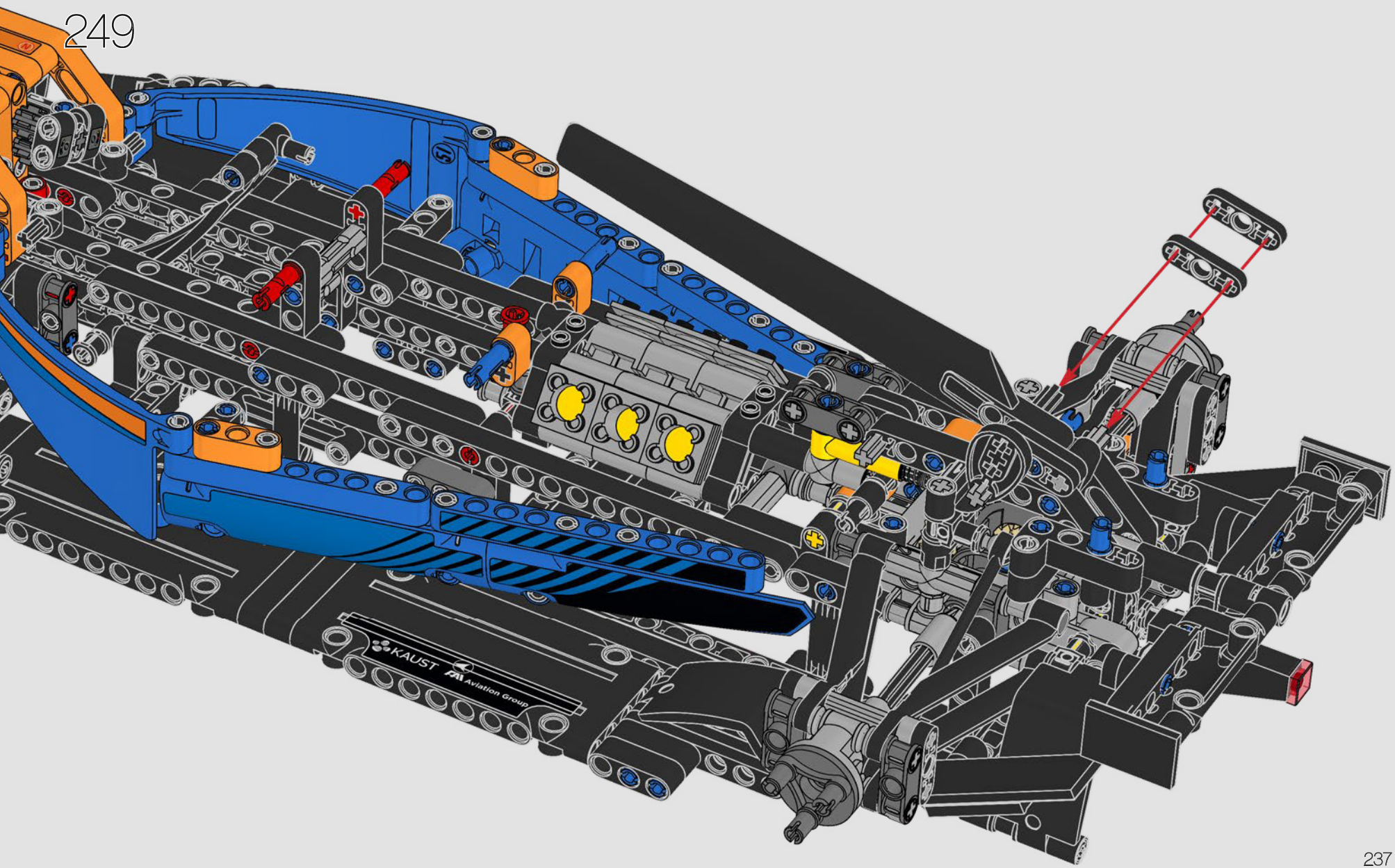

250

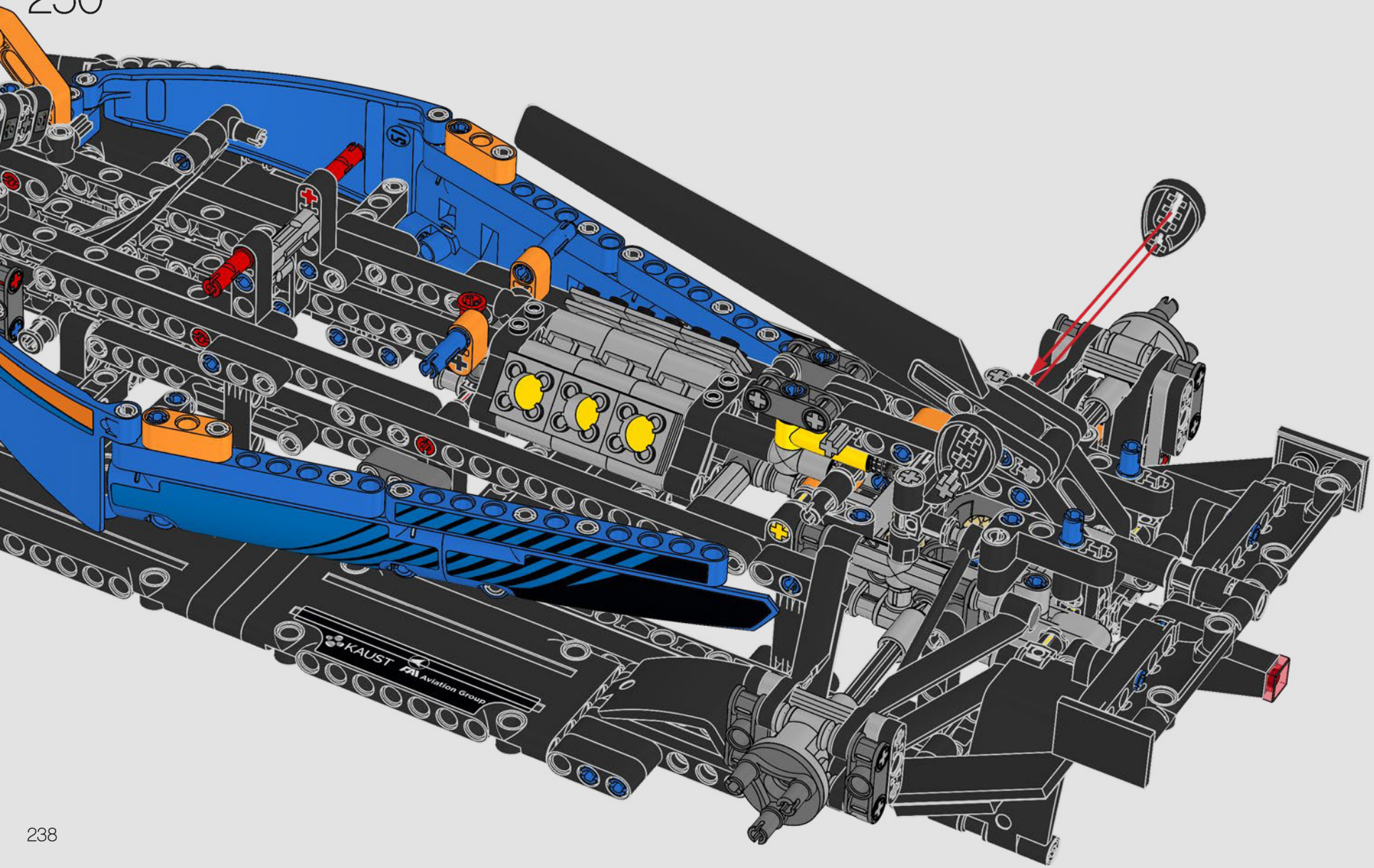

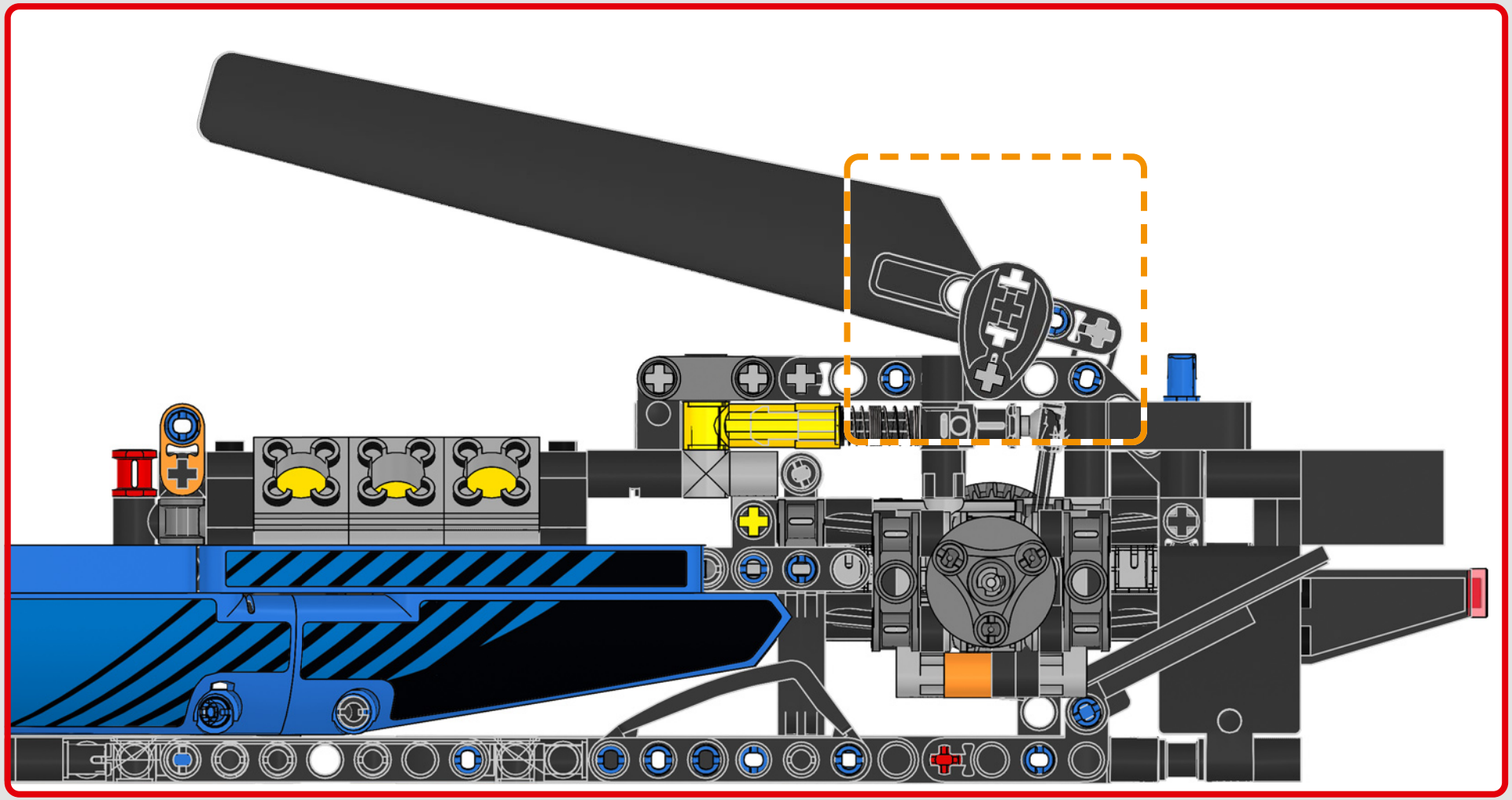

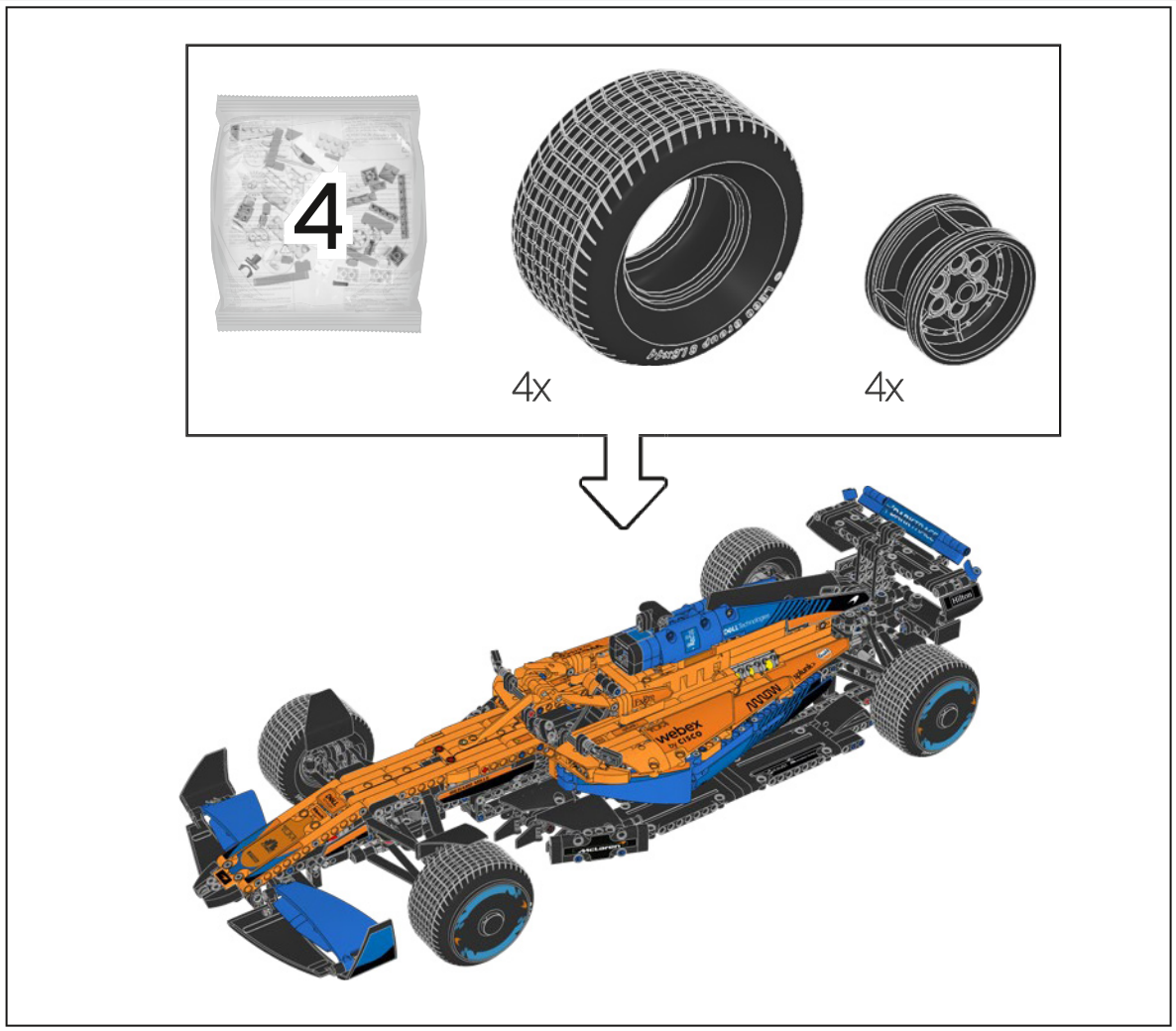
4
4x
4x

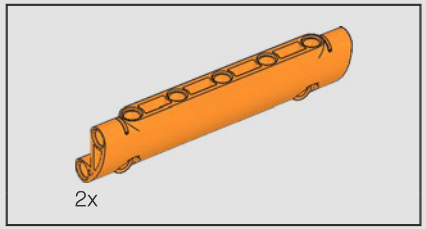

251

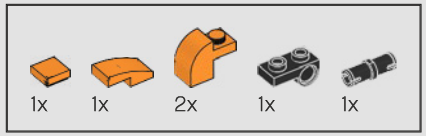

252

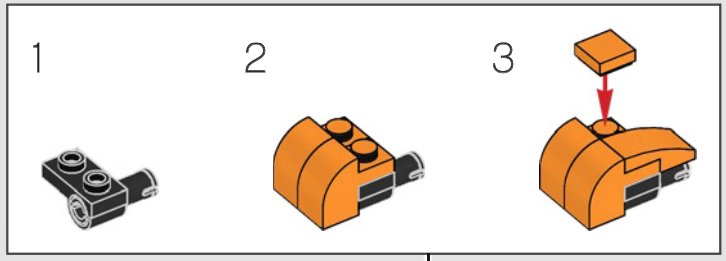

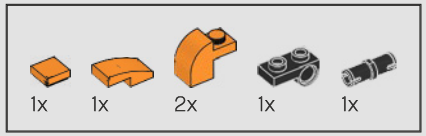

253

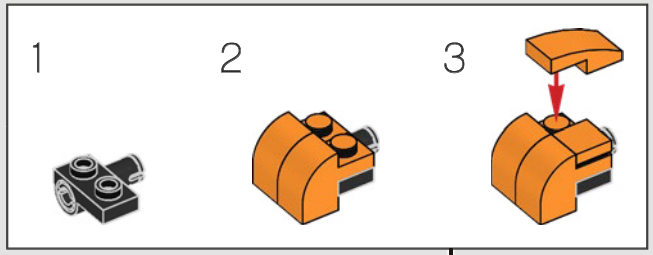

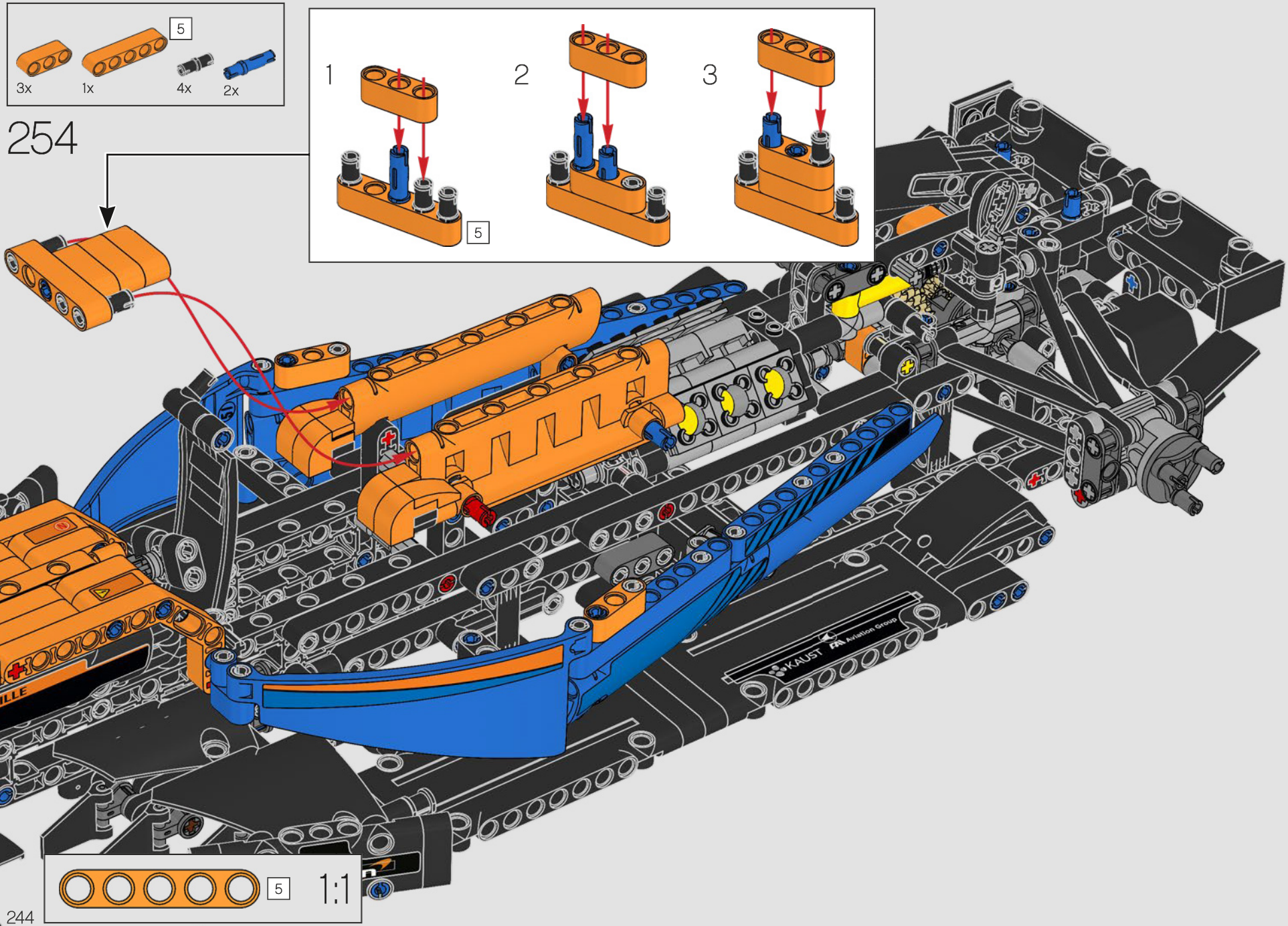
5
3x
1x
4x
2x
254
1
2
3
5
MILLE
KAUST
Aviation Group
5
1:1

255

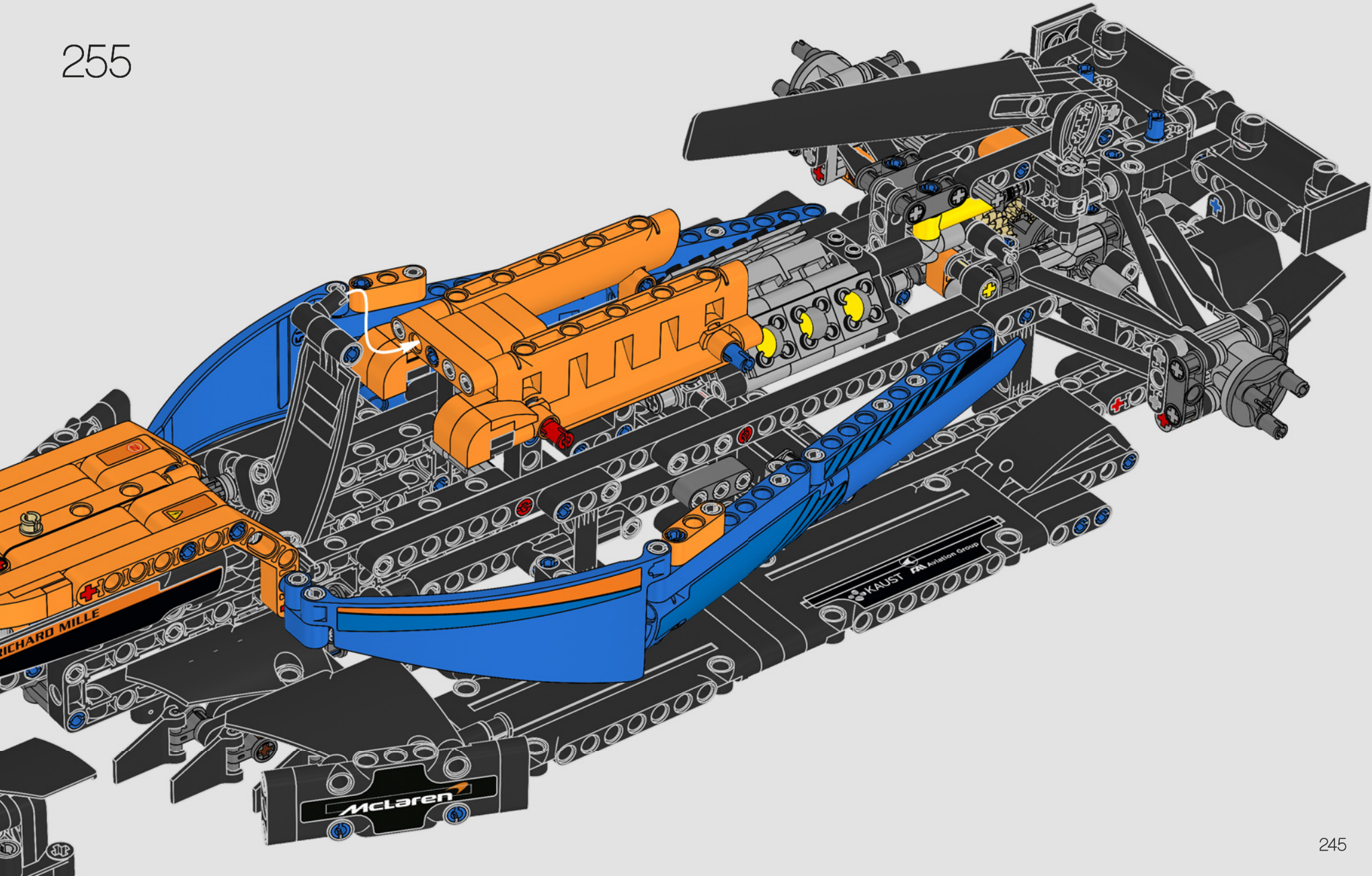

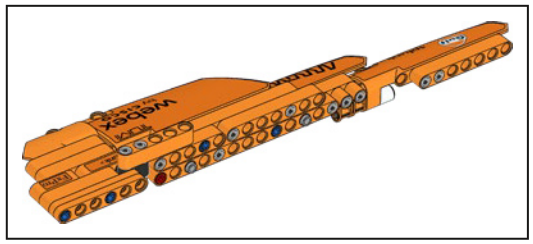

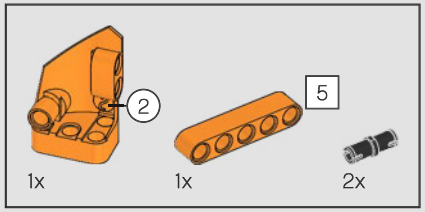

256

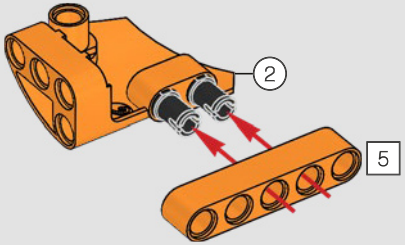

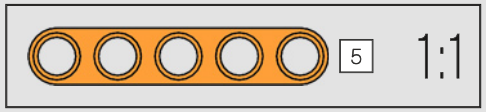

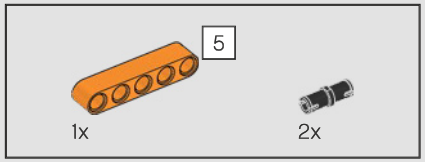

257

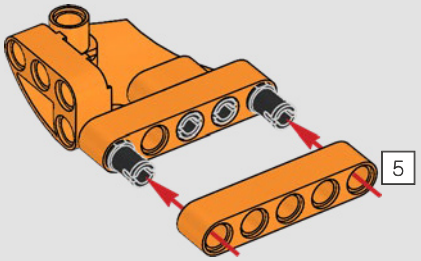

258

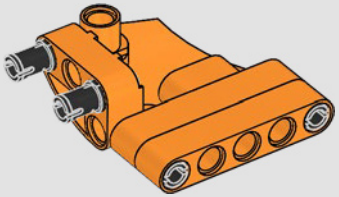

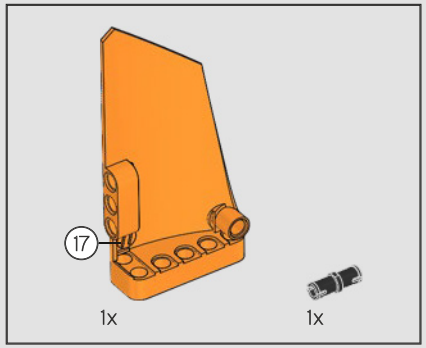

259

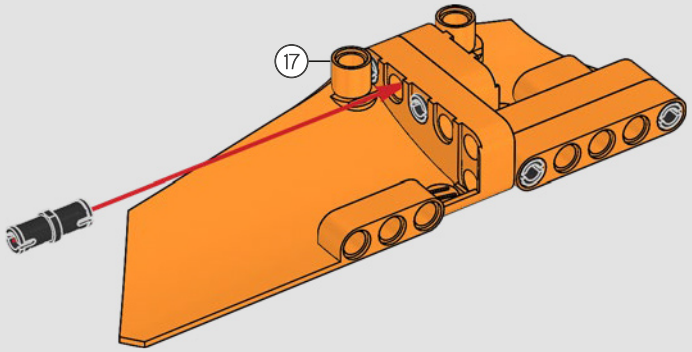

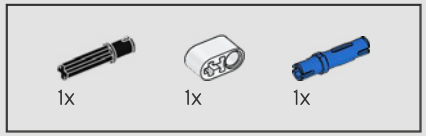

260

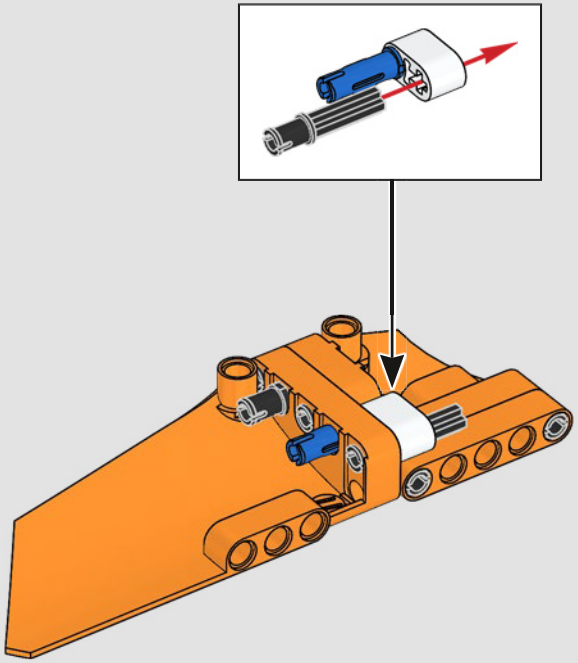

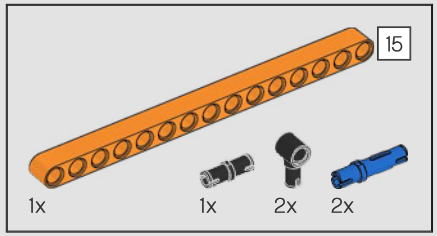

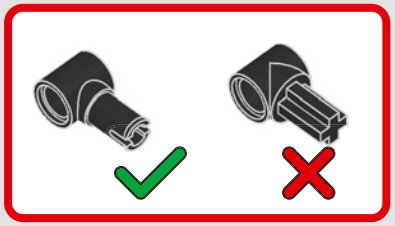

261

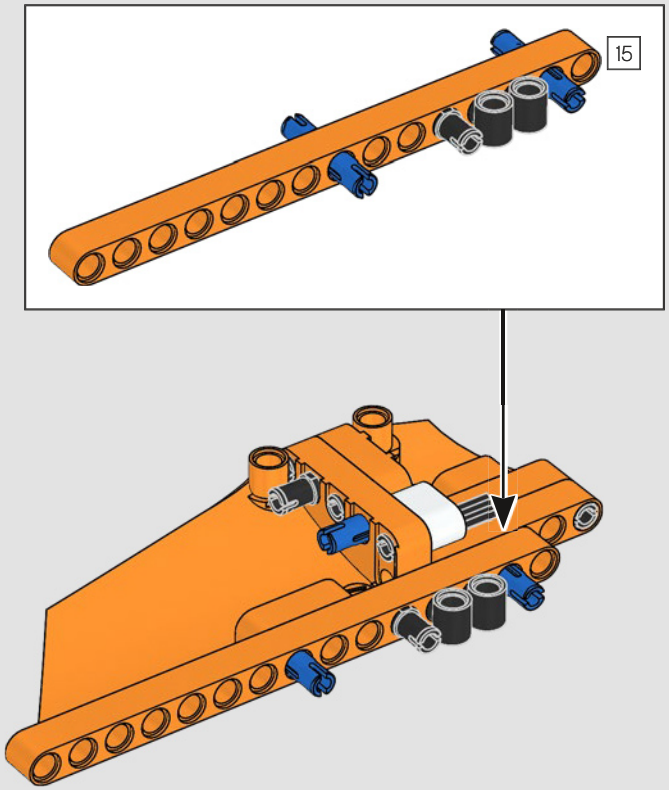

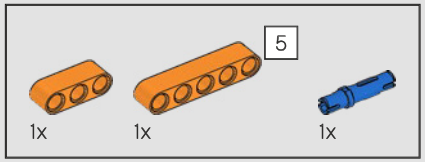

262

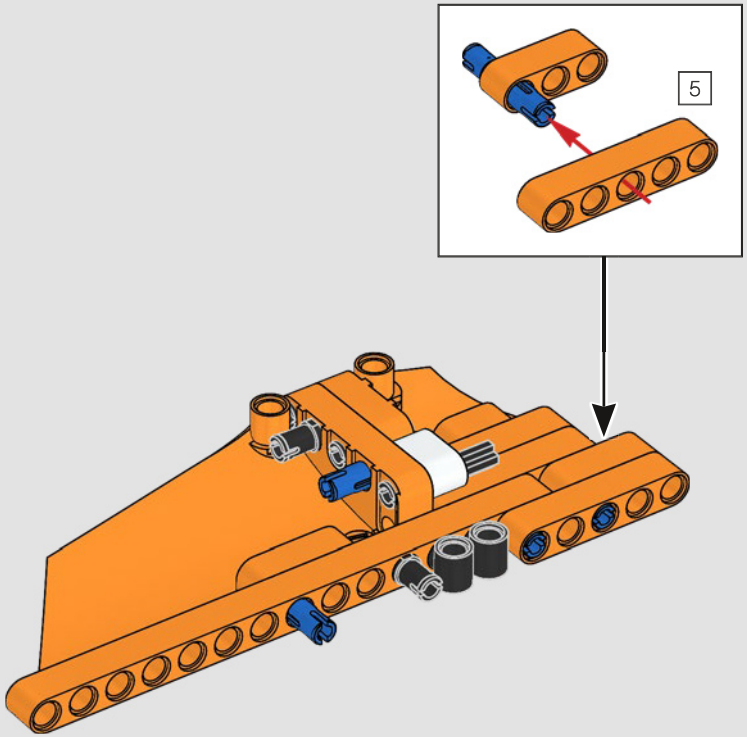

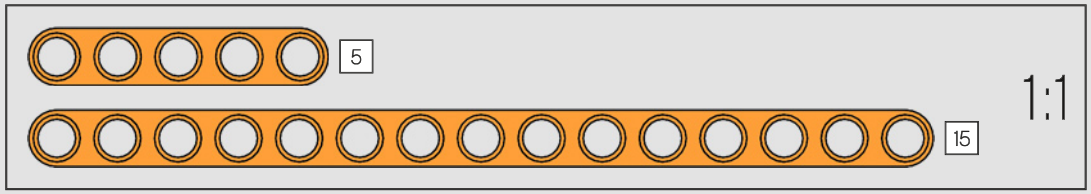

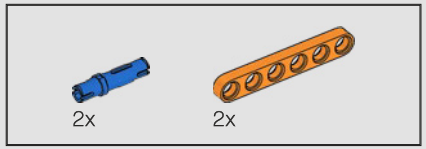

263

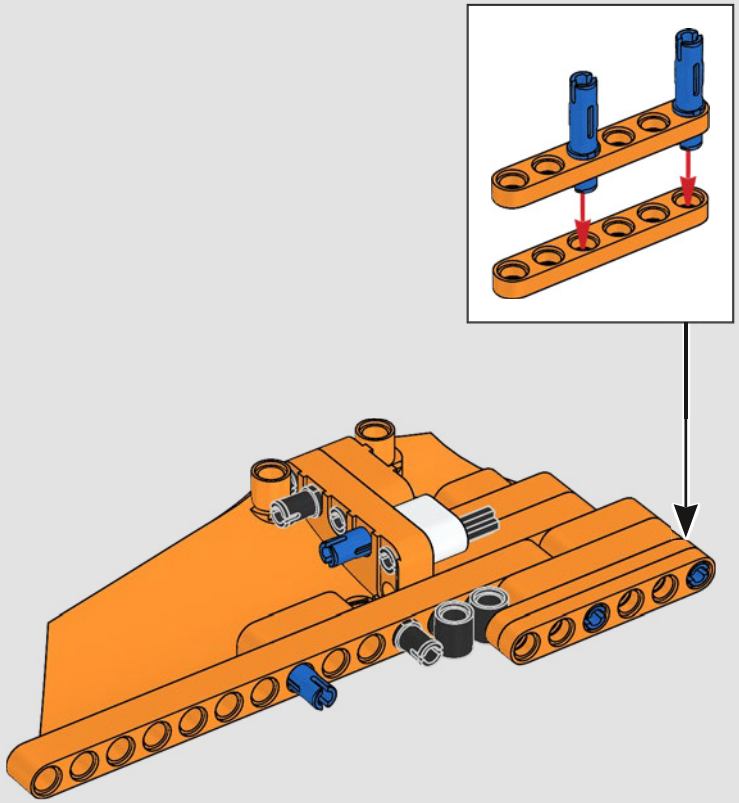

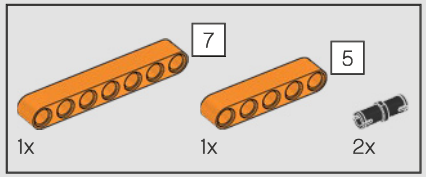

264

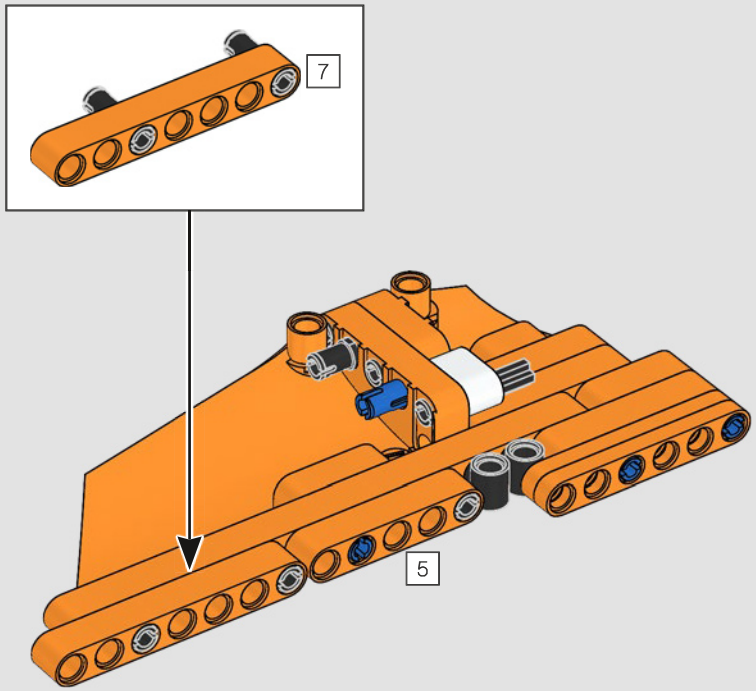

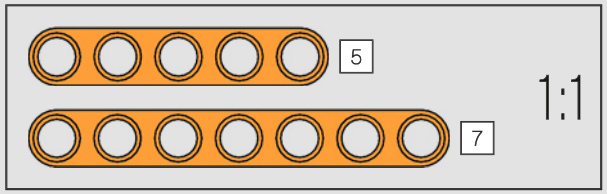

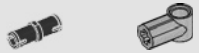

265

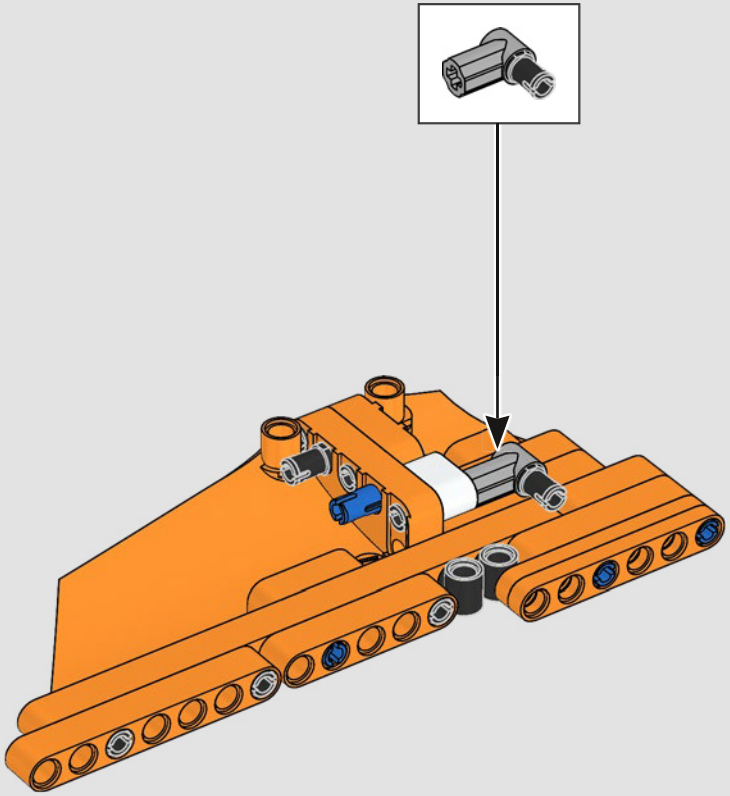

266

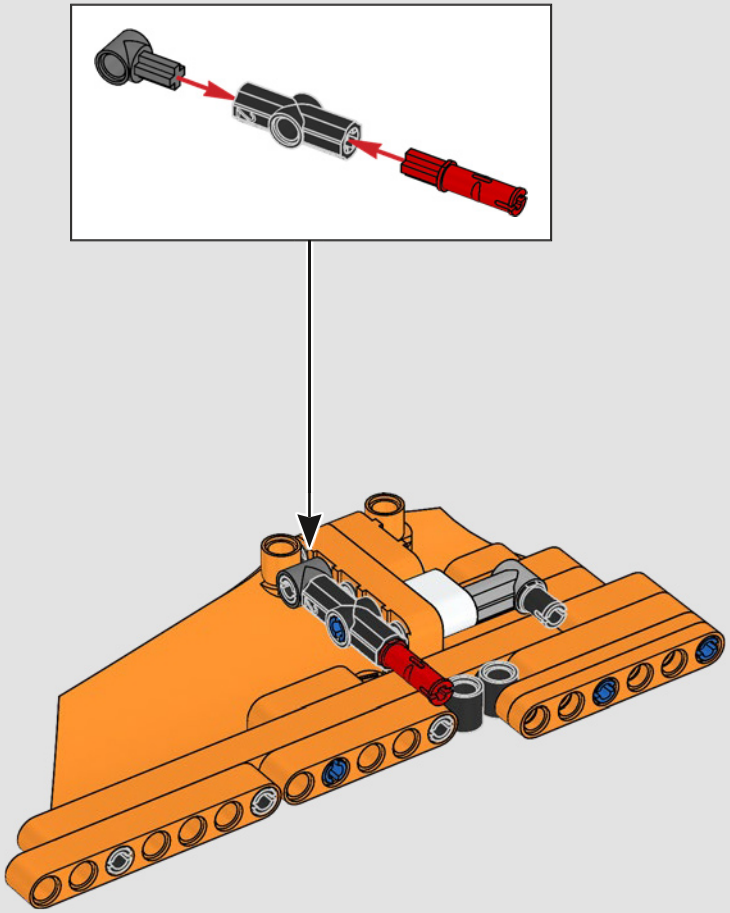

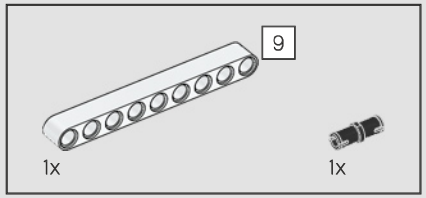

267

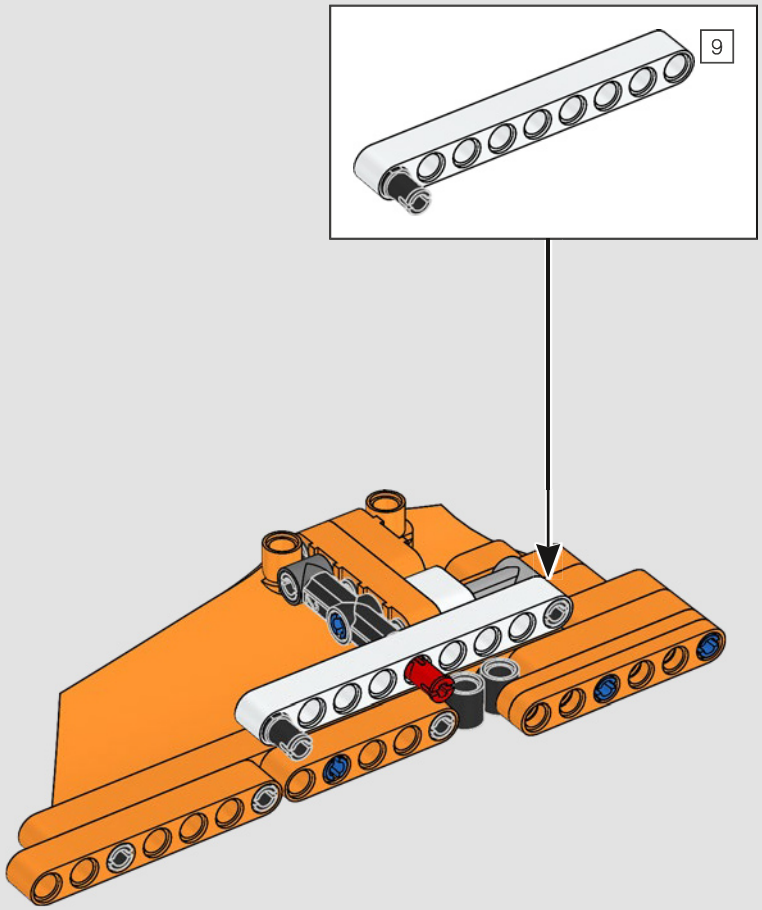

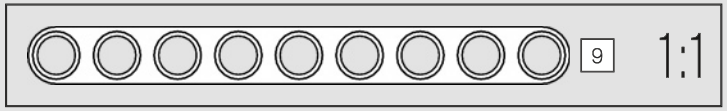

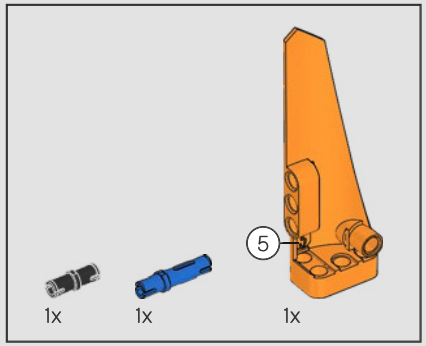

268

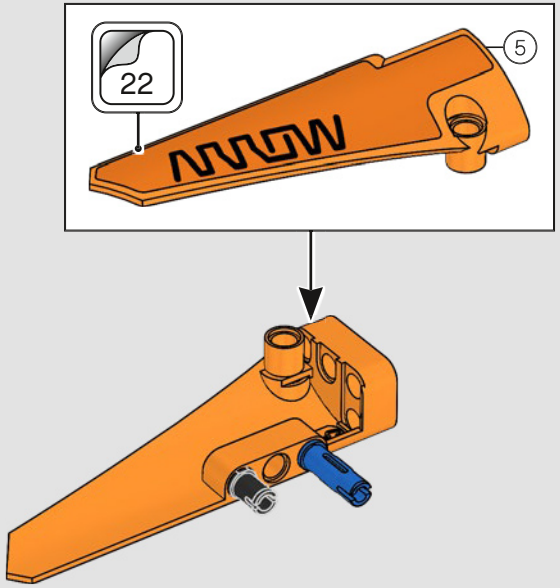

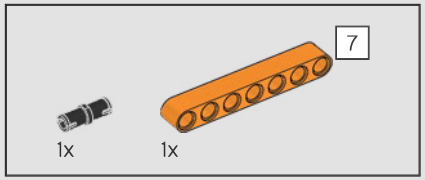

269

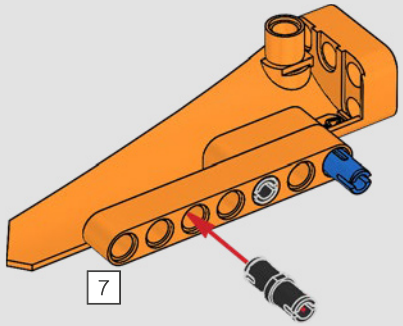

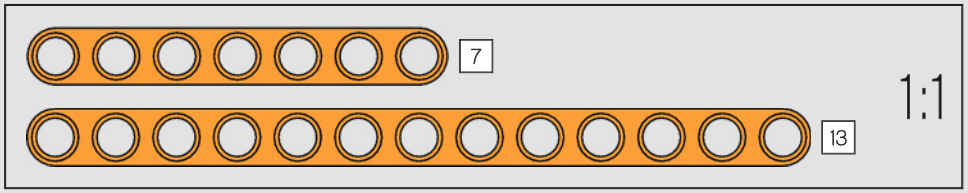

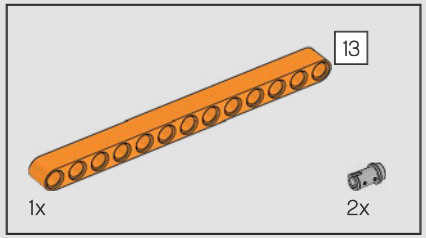

270

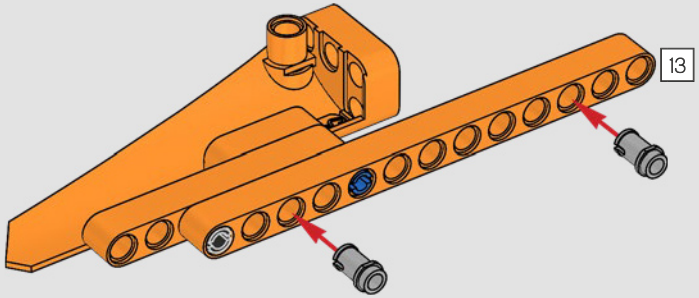

271

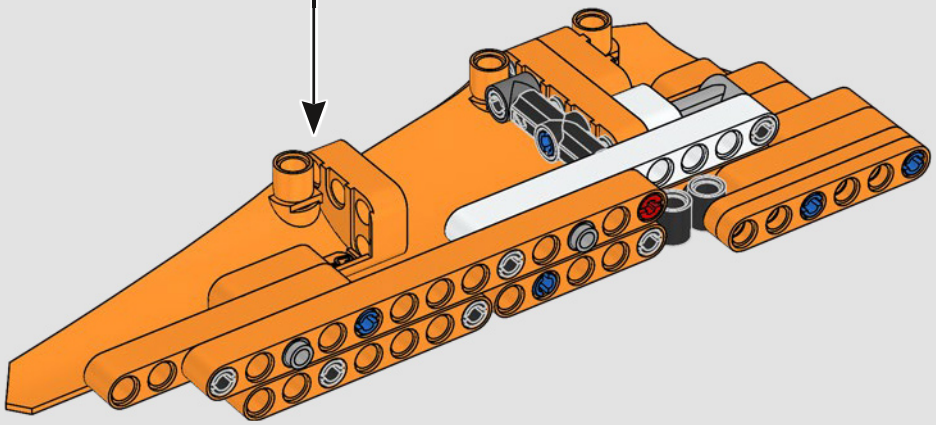

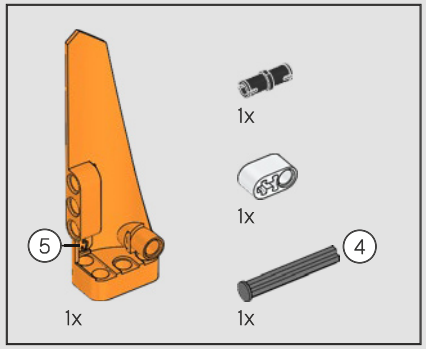

272

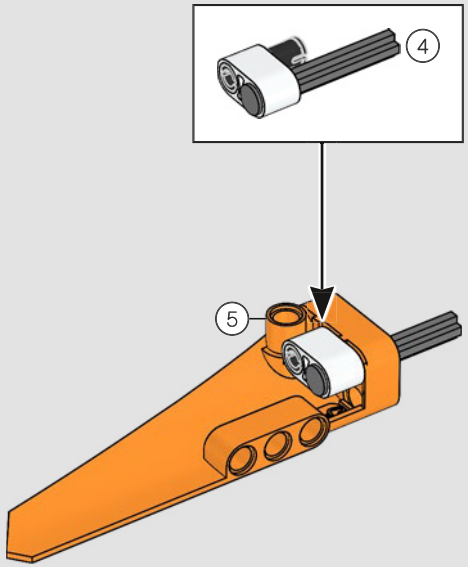

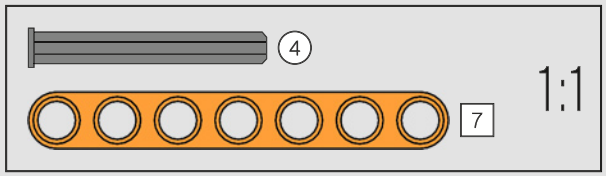

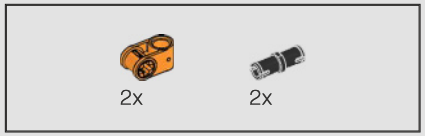

273

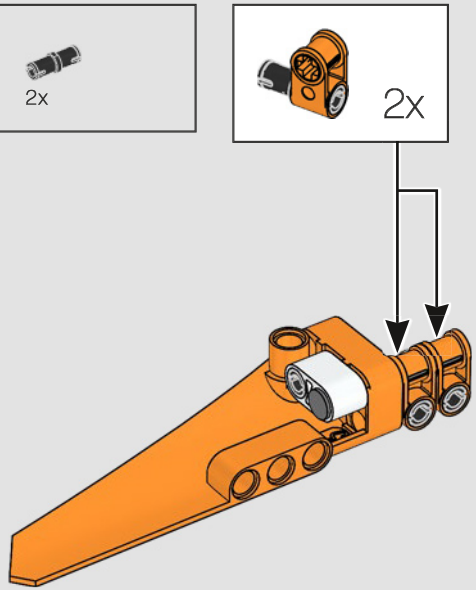

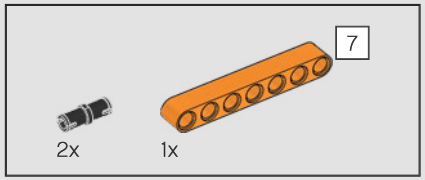

274

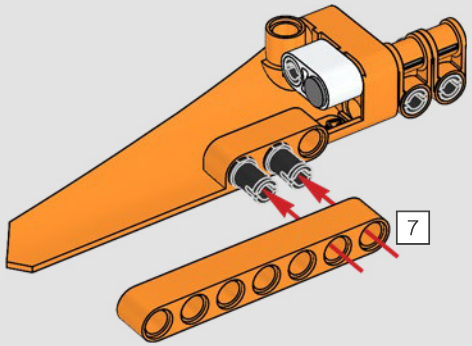

275

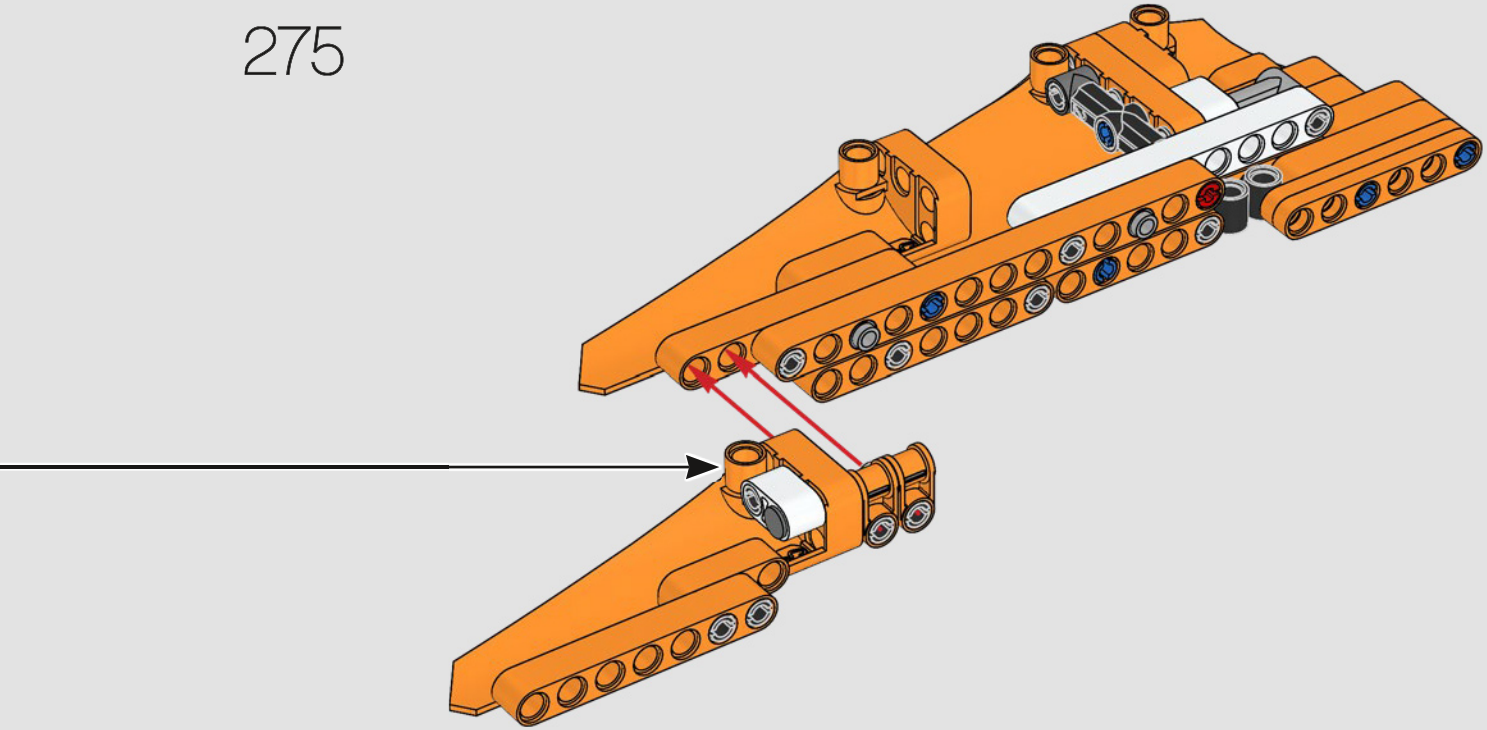

276

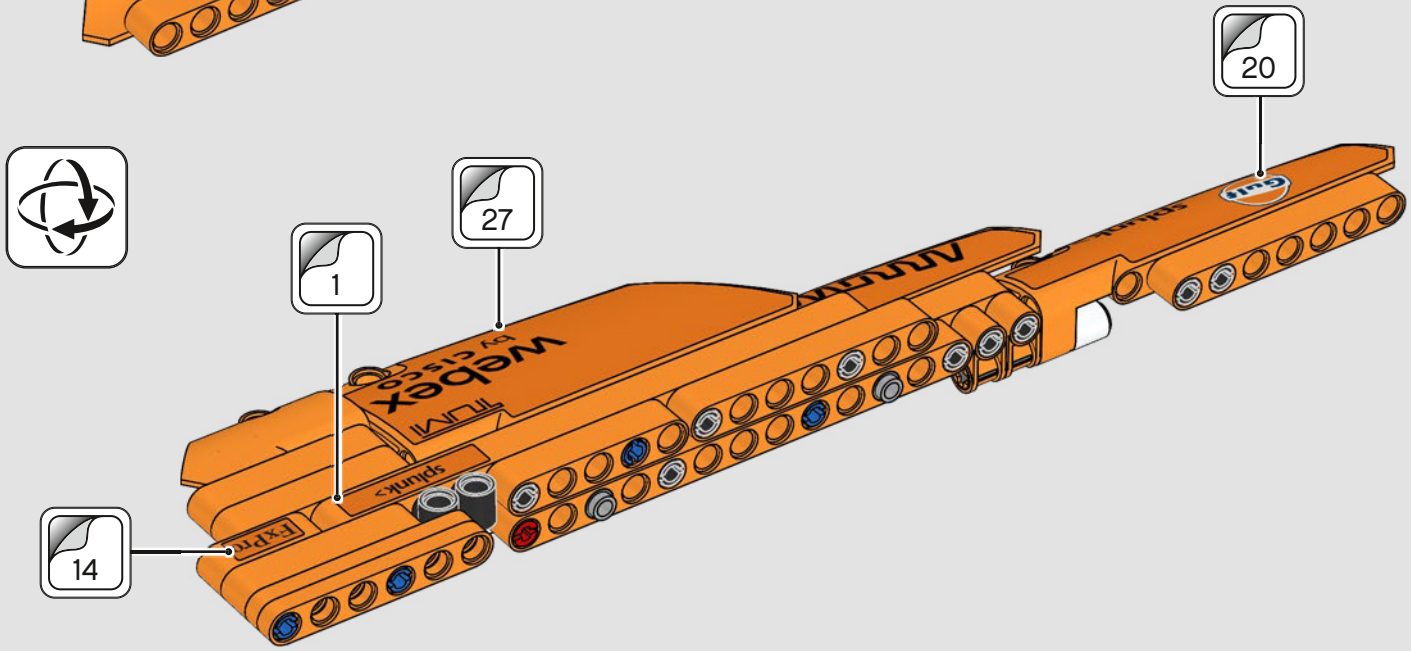

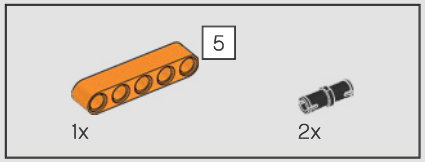
5
1x
2x

277

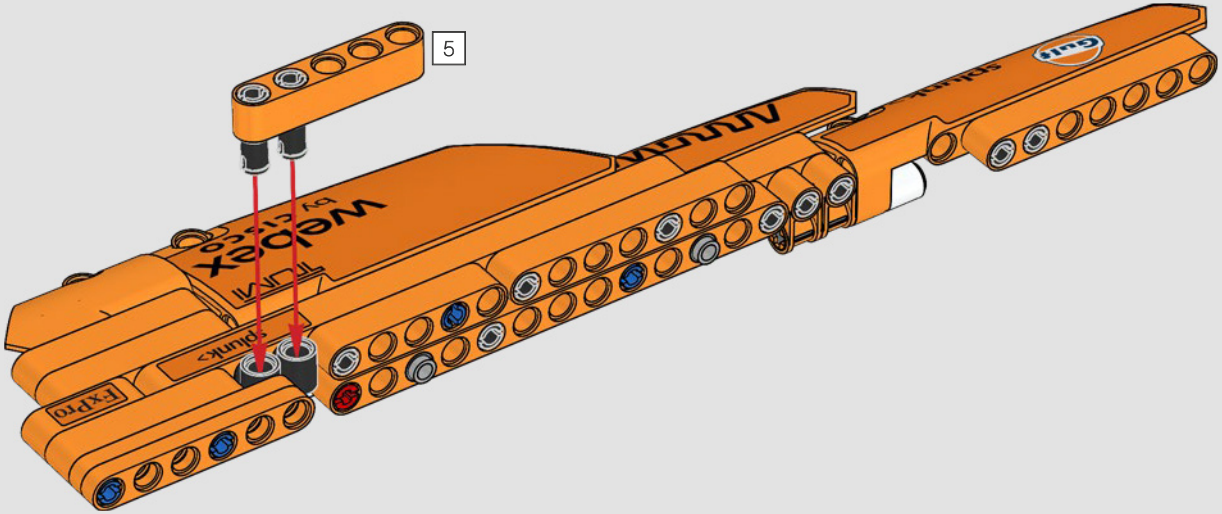
5
Gulf
Schutz
Antrieb
Weo.ex
by Gulf
TUNAI
Spunk>
Expro

5

1:1

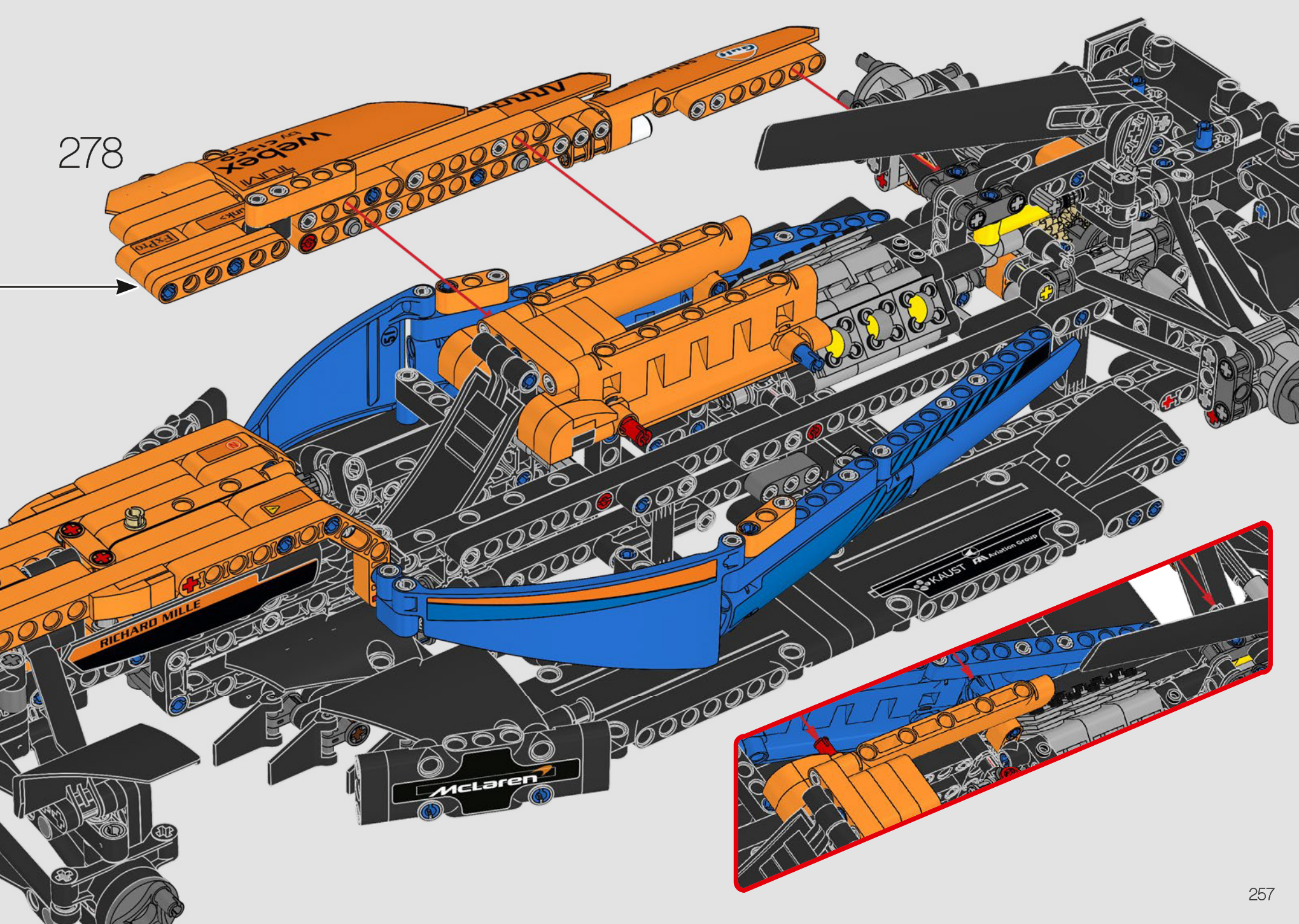
278
Webex
RICHARD MILLE
KAUST
McLaren

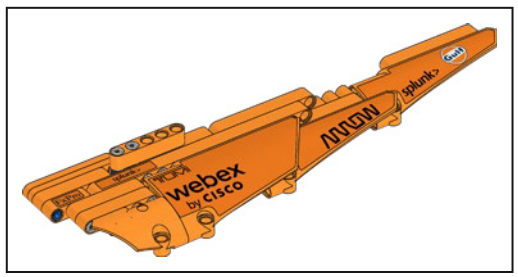

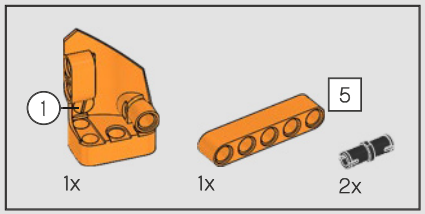

279

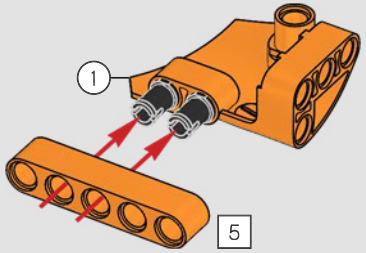

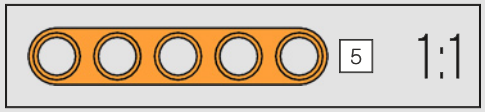

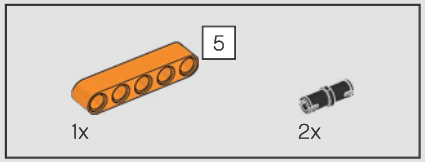

280

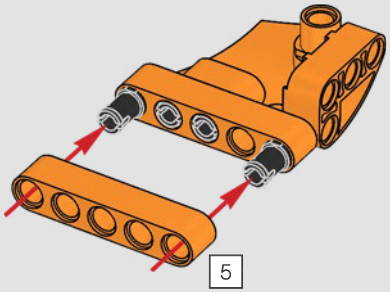

281

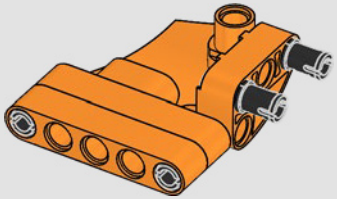

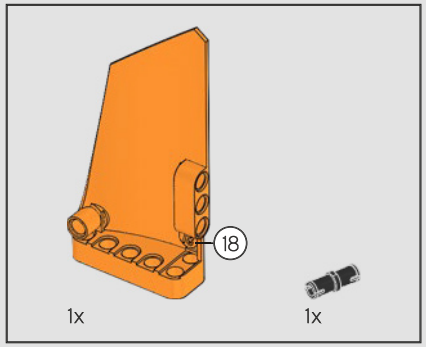

282

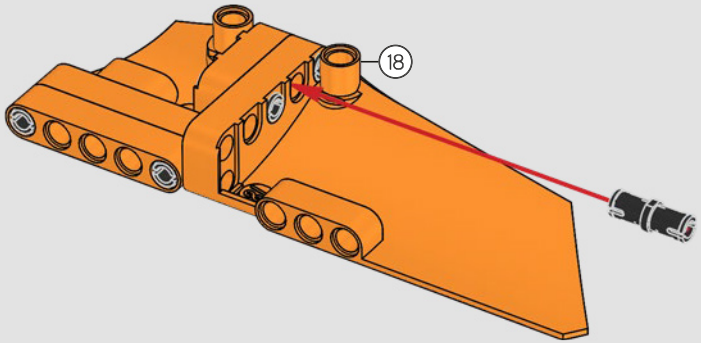

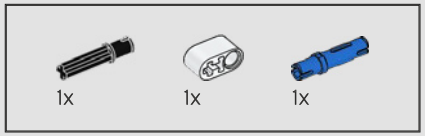

283

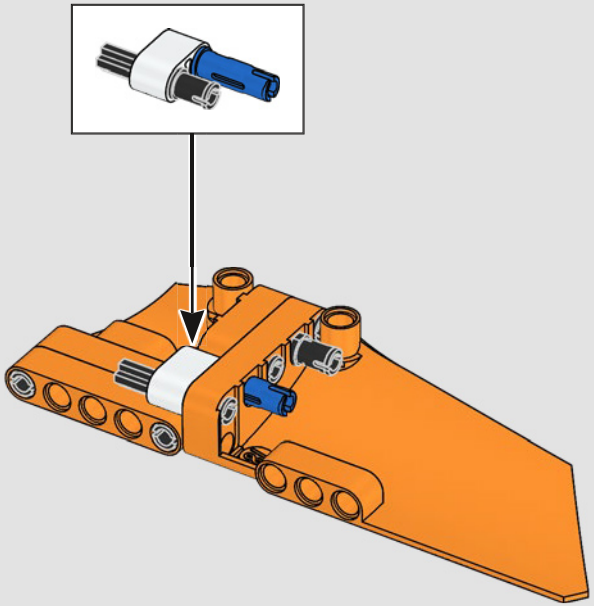

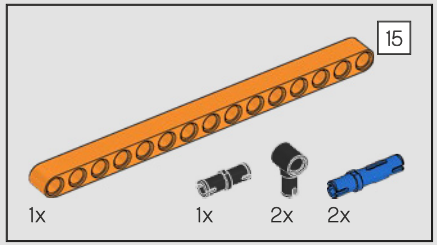

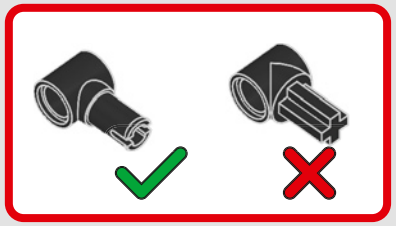

284

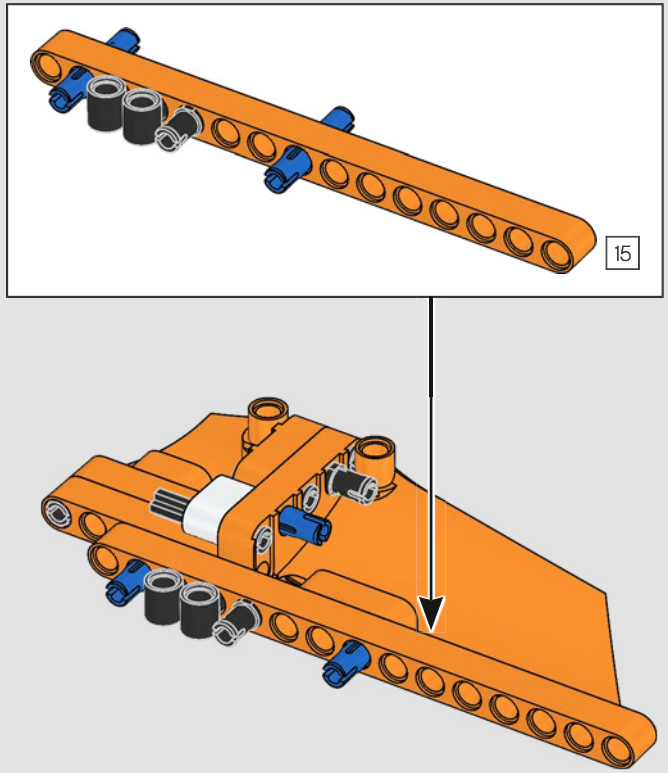

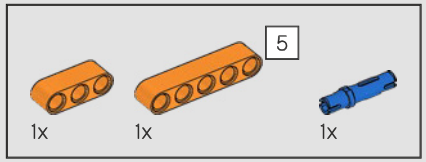

285

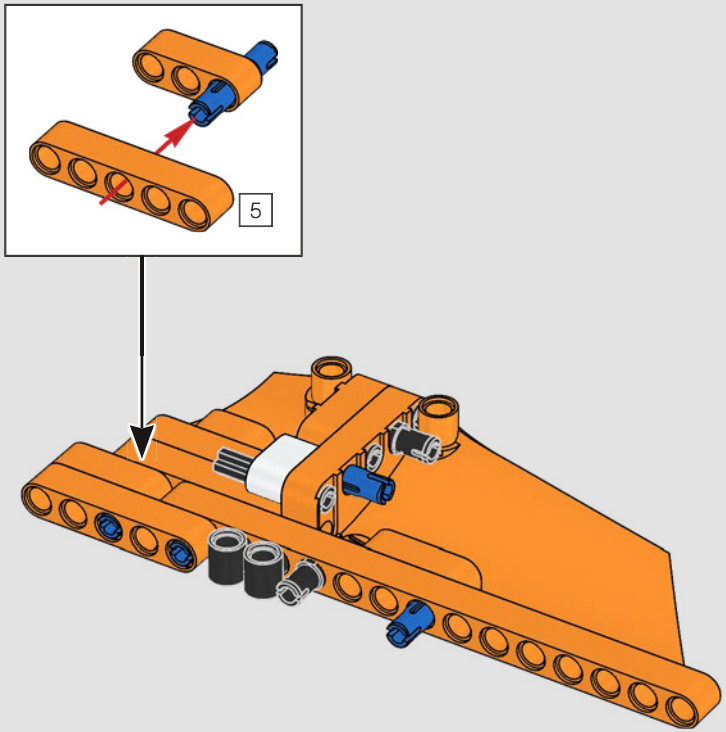

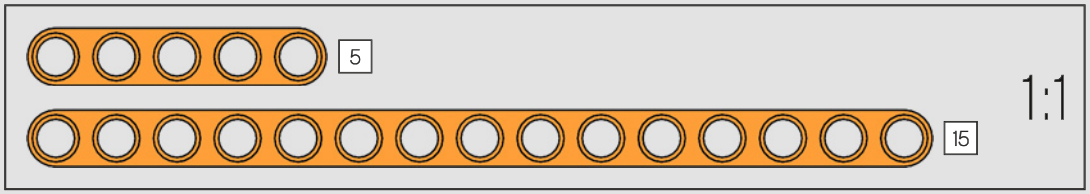

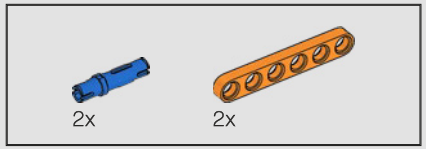

286

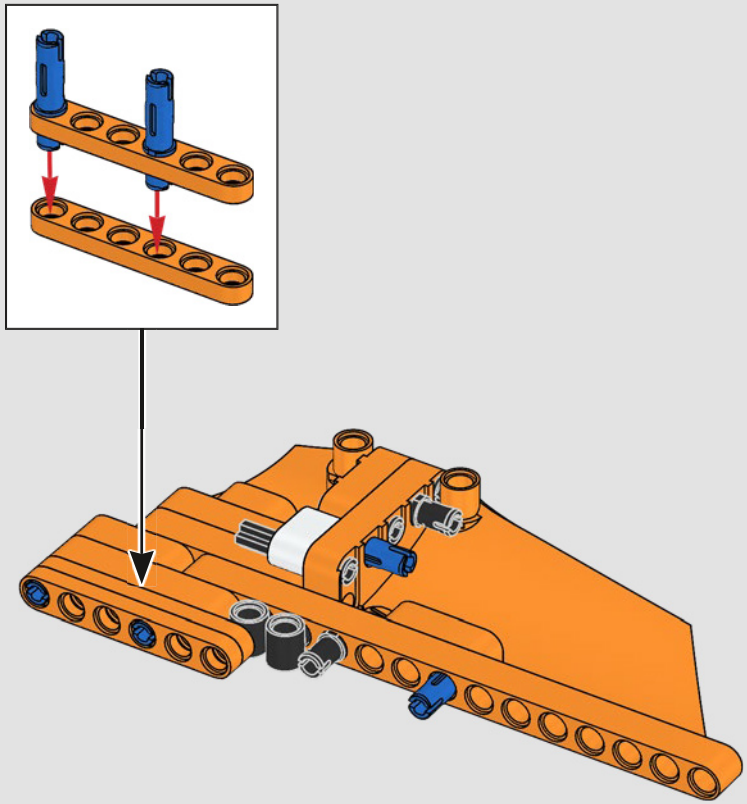

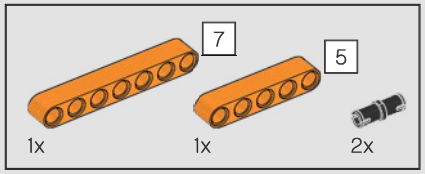

287

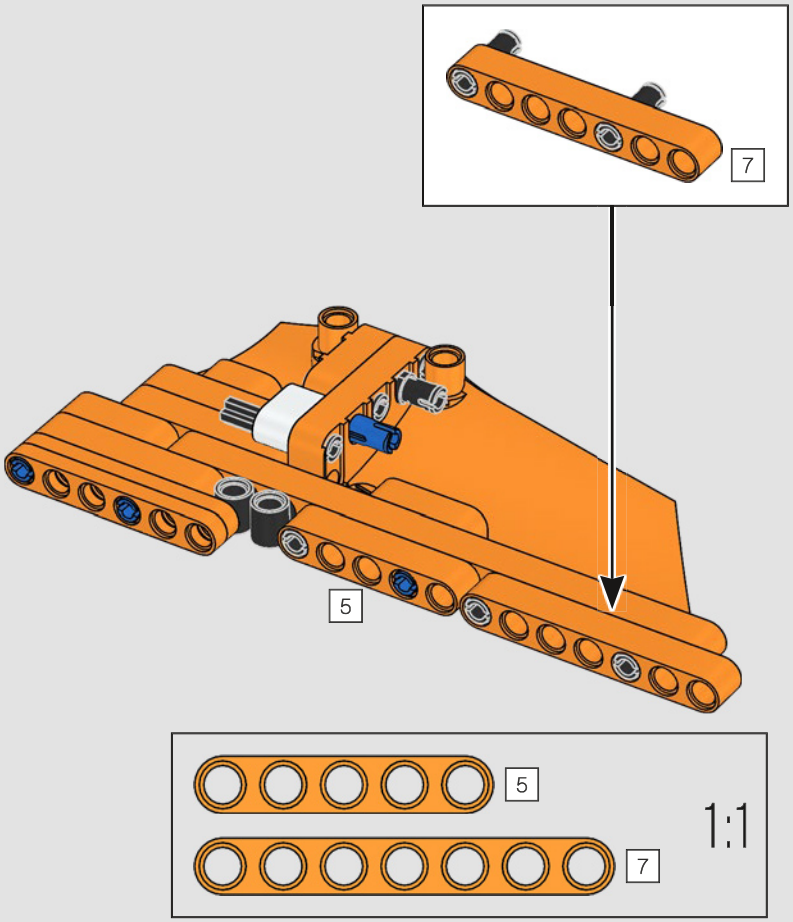

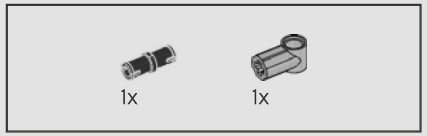

288

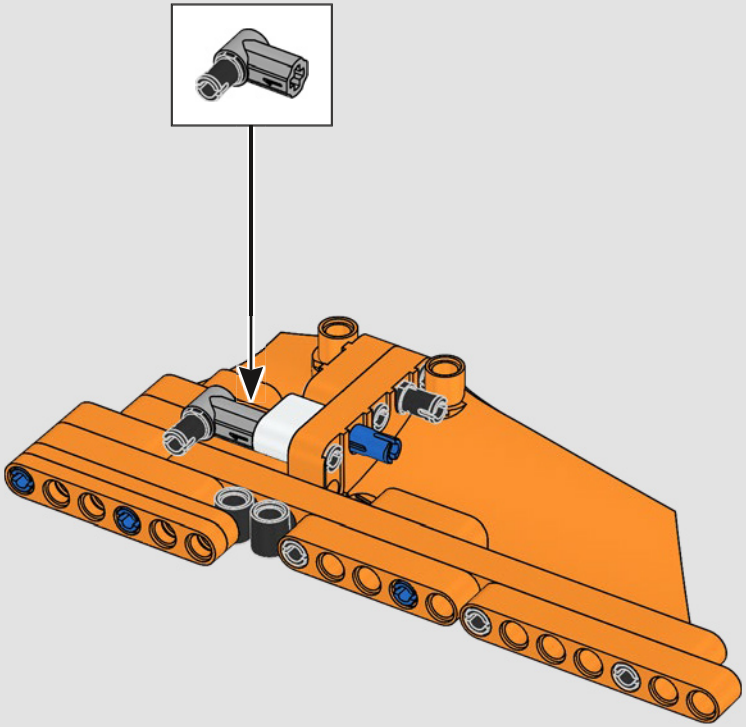

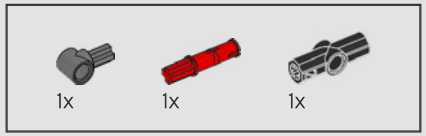

289

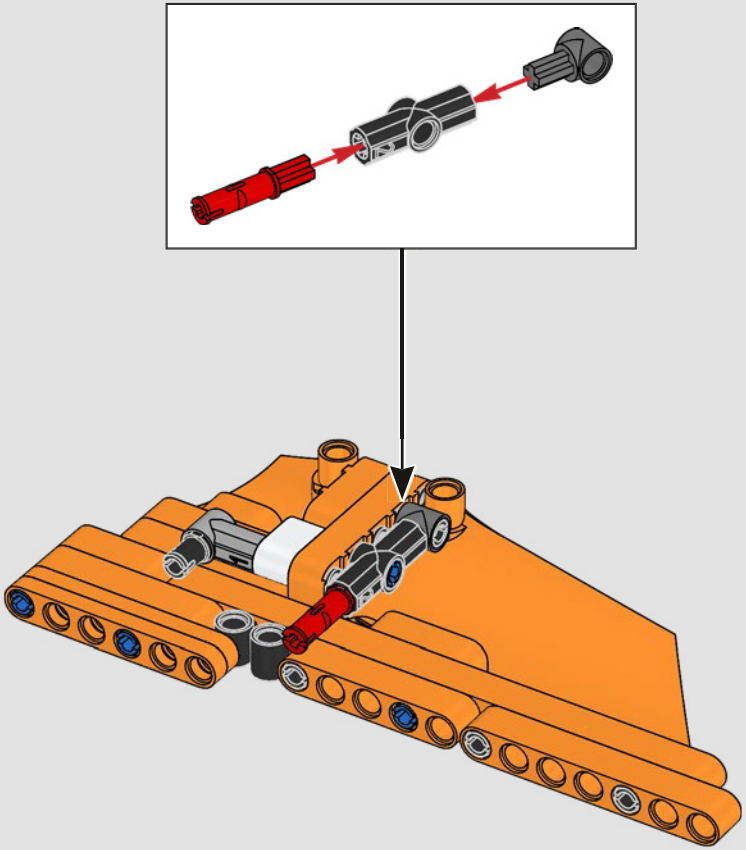

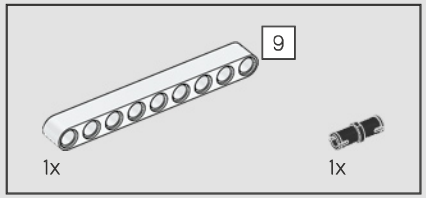

290

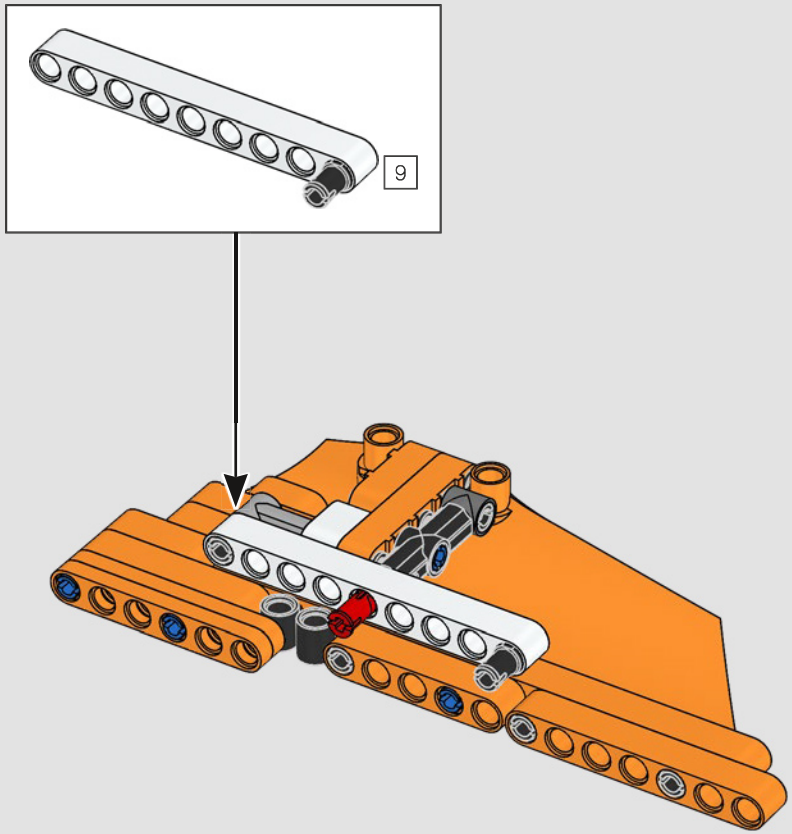

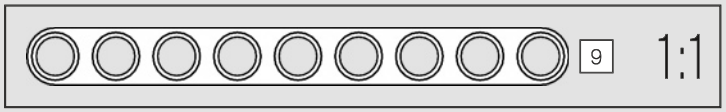

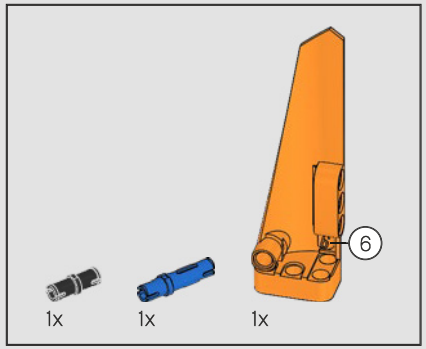

291

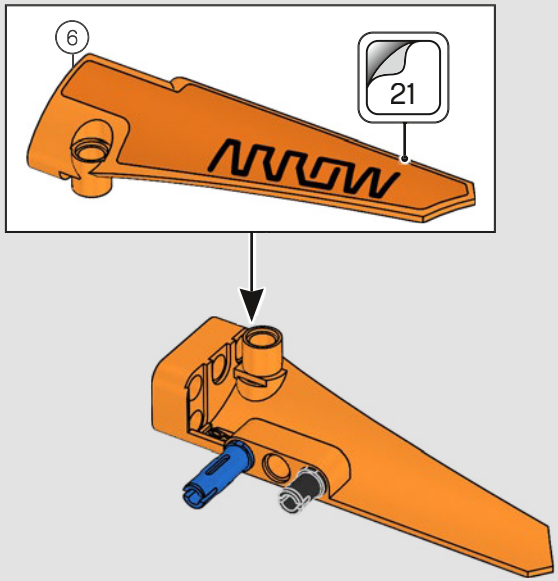

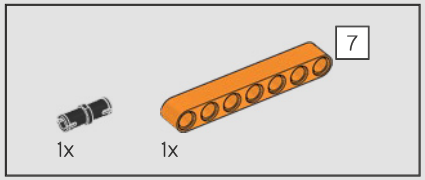

292

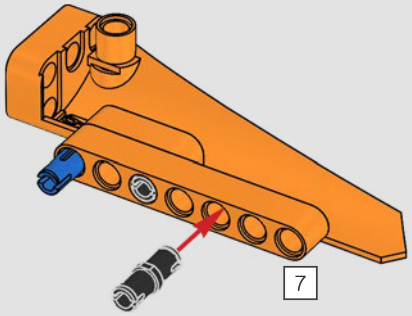

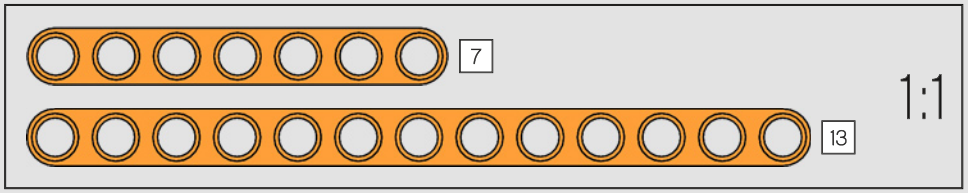

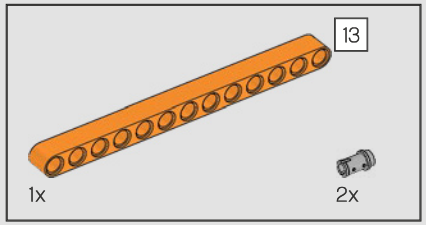

293

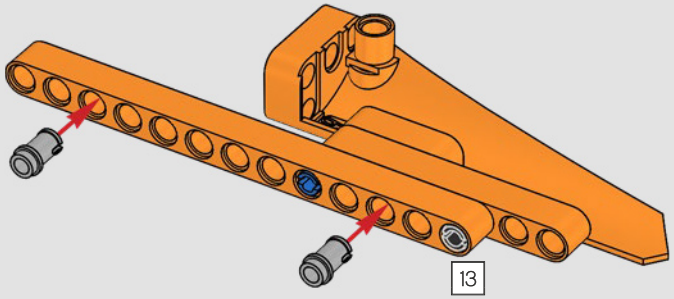

294

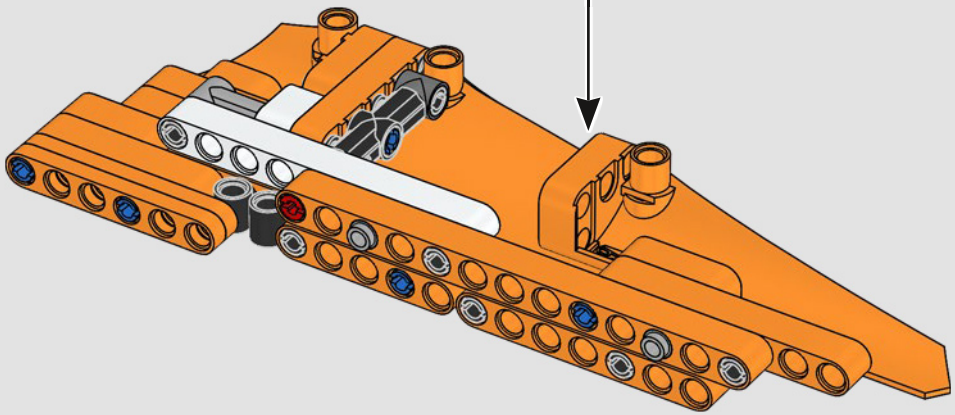

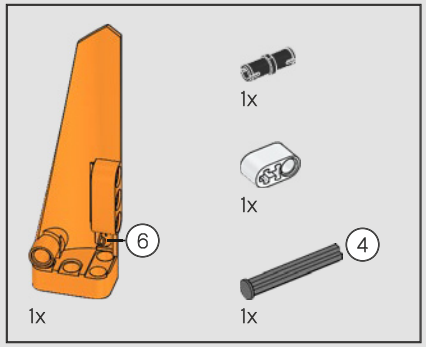

295

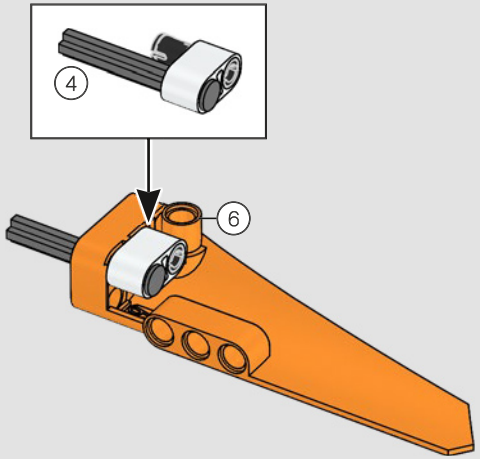

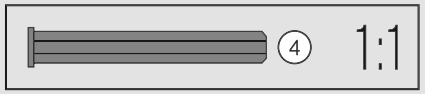

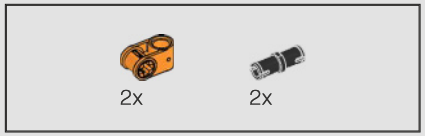

296

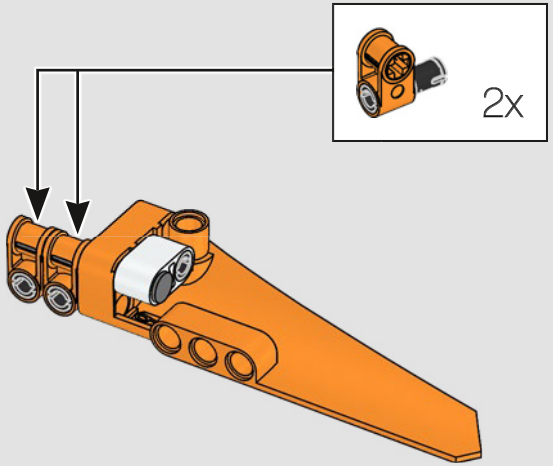

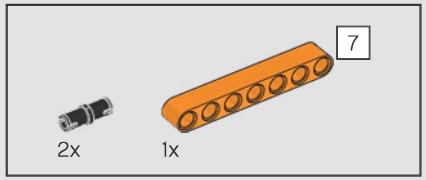

297

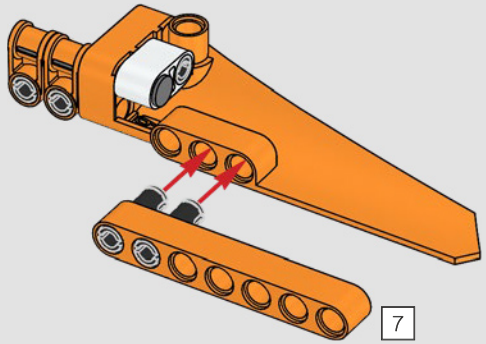

298

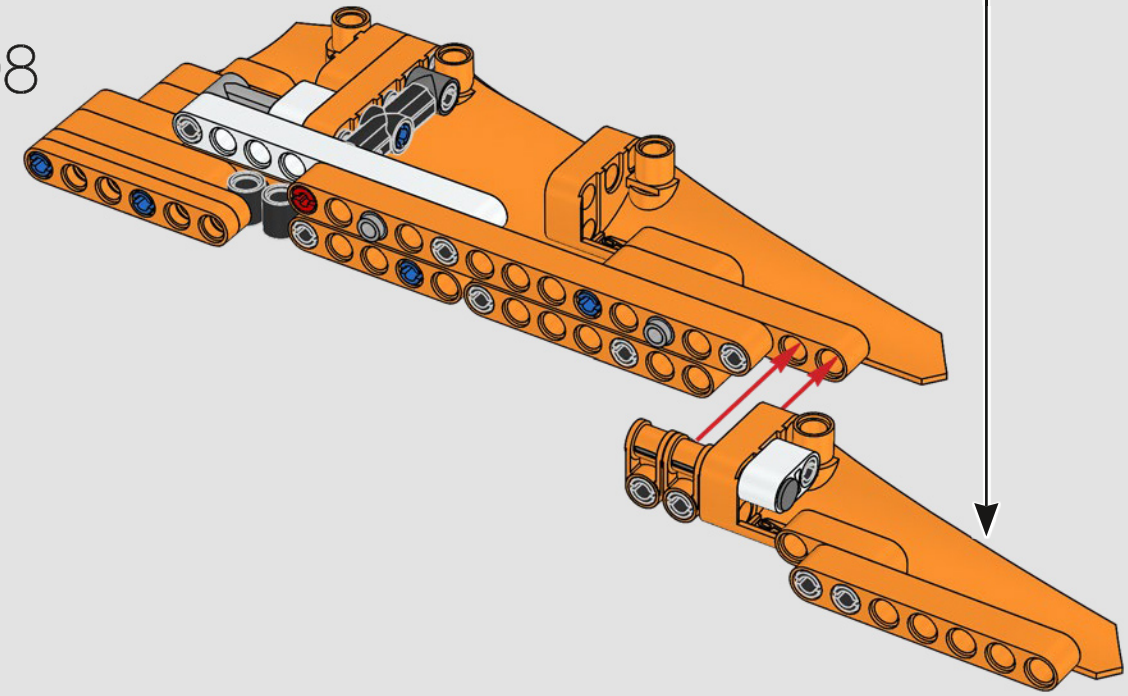

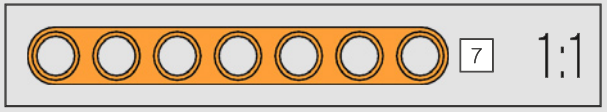

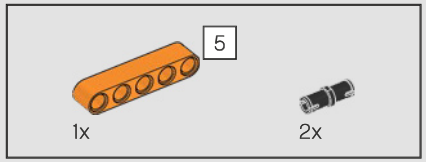

299

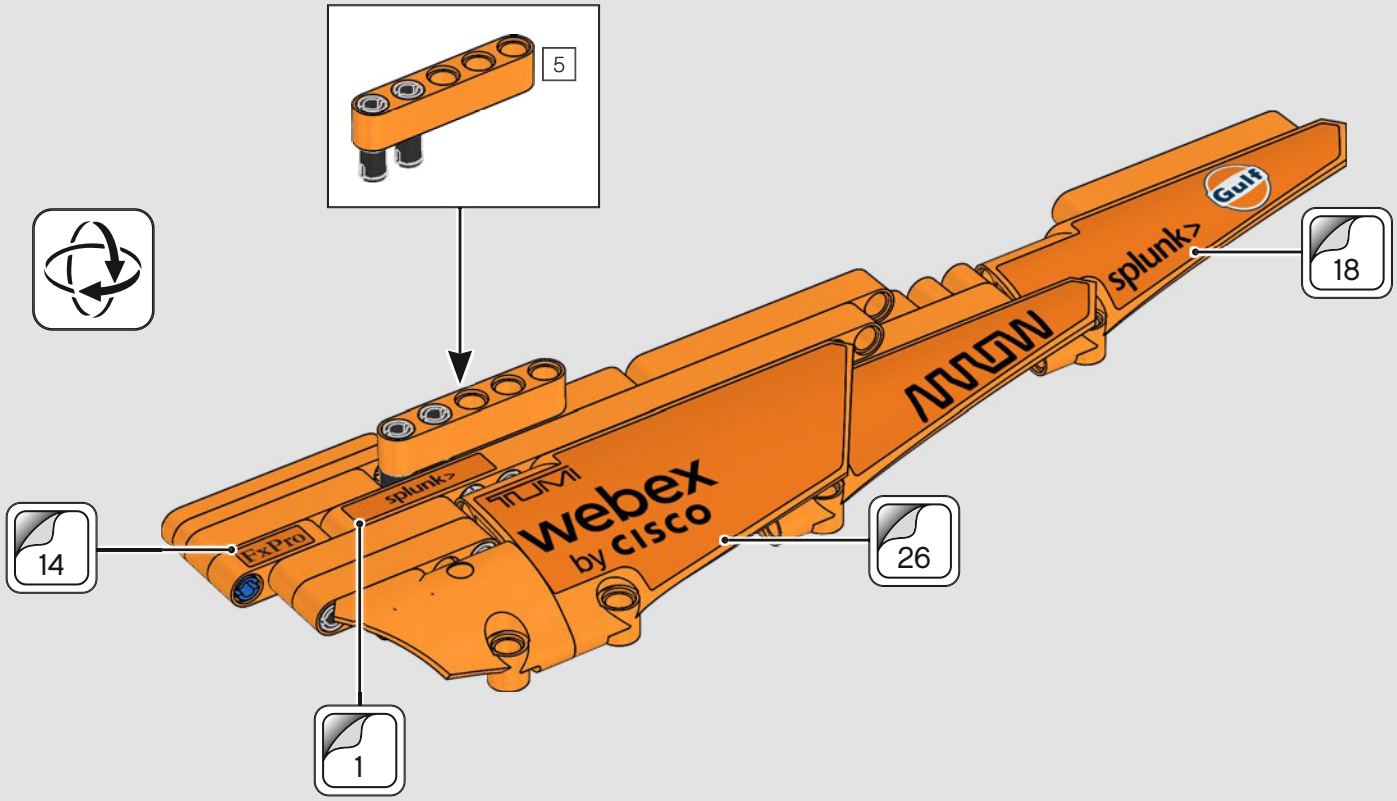

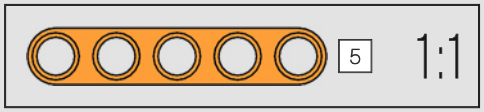

300

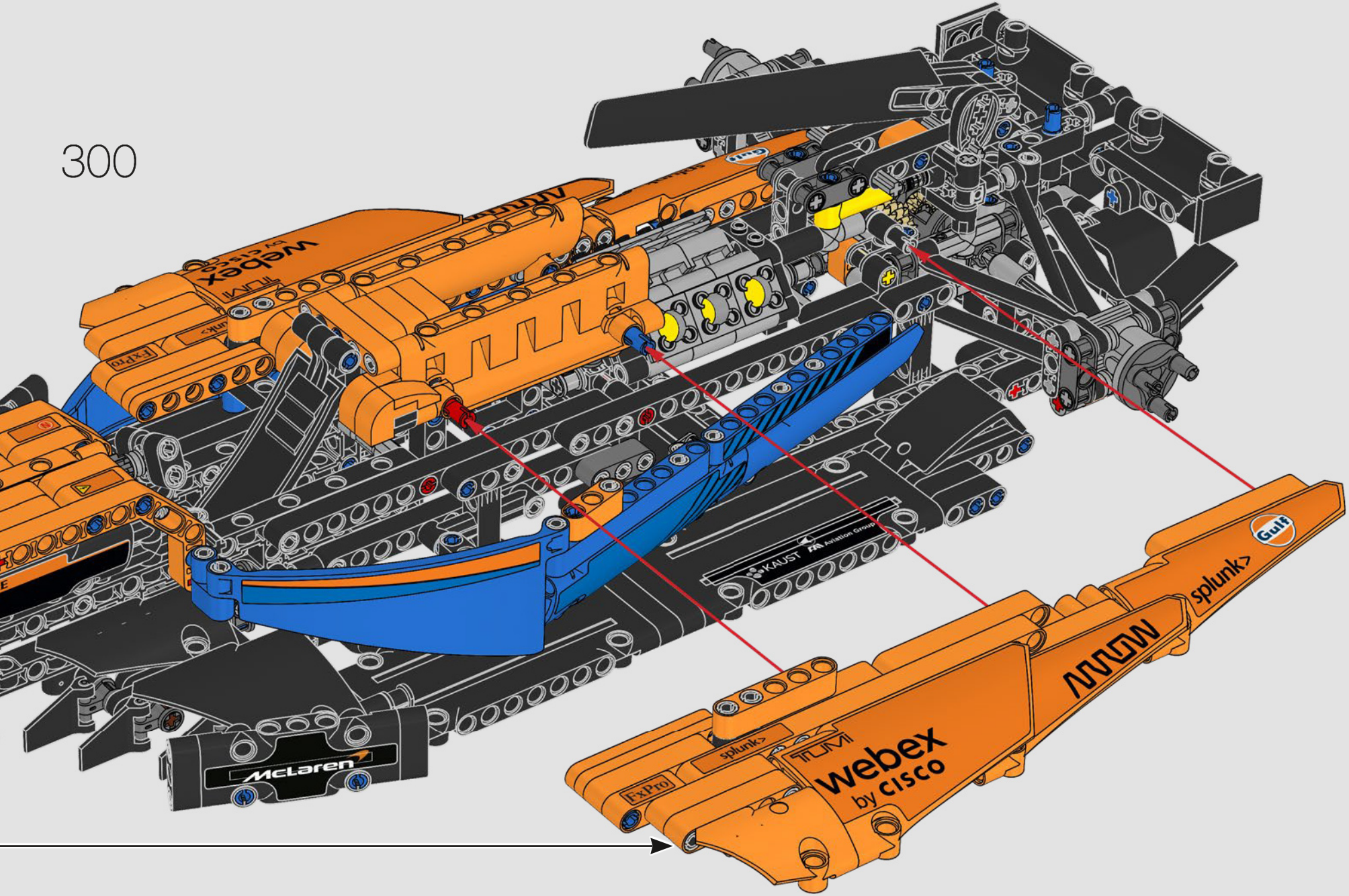
McLaren
KAUST
Aviation Group
Gulf
splunk>
webex
by cisco
FxPro

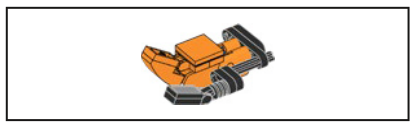

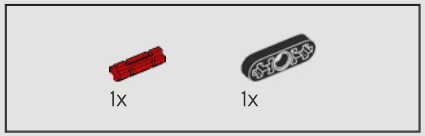

301

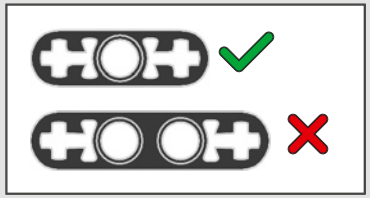

302

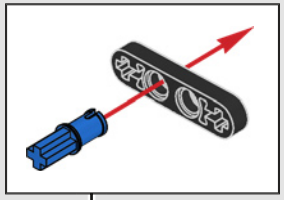

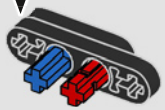

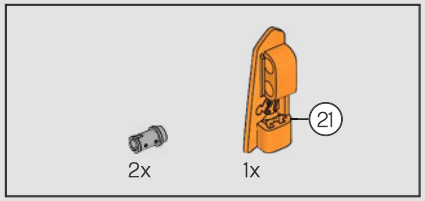

303

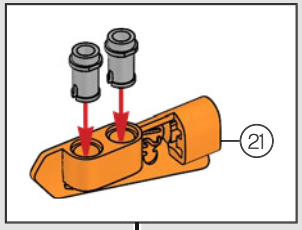

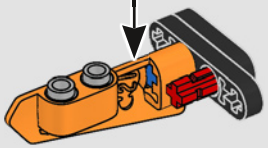

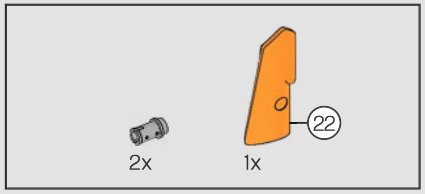

304

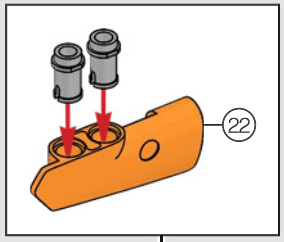

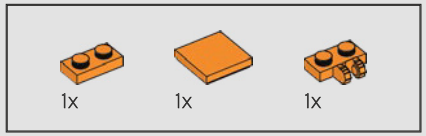

305

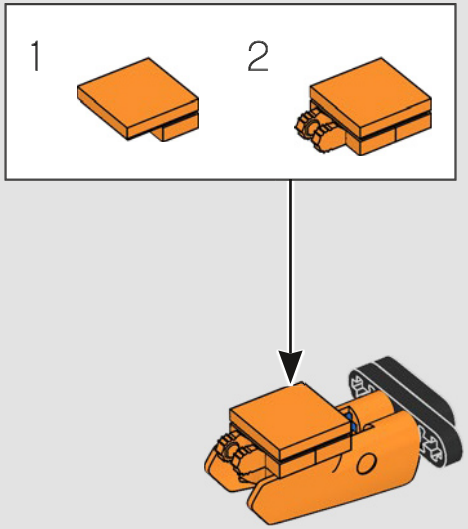

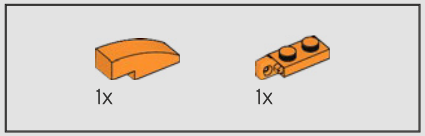

306

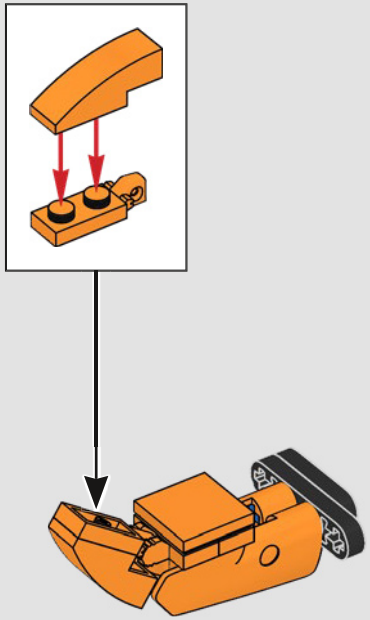

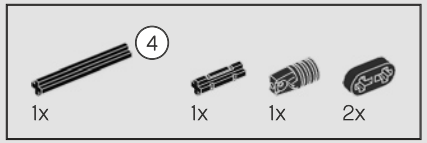

307

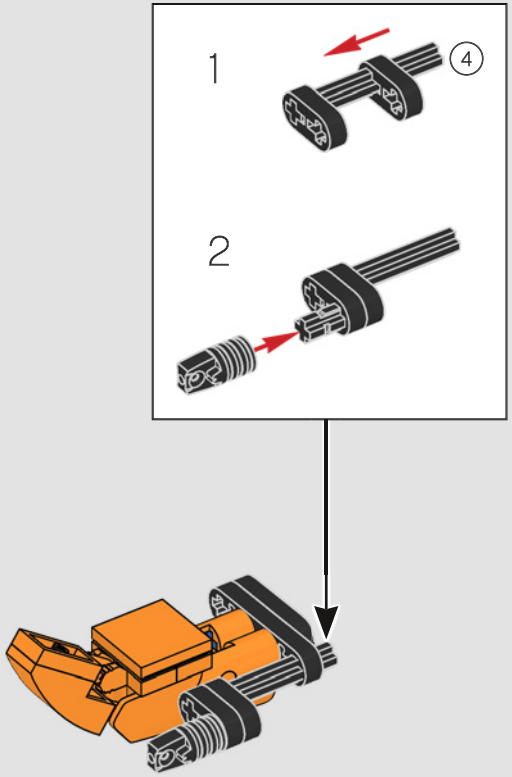

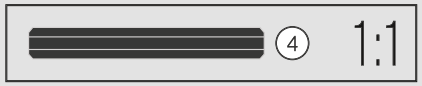

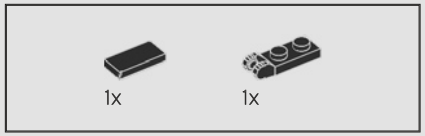

308

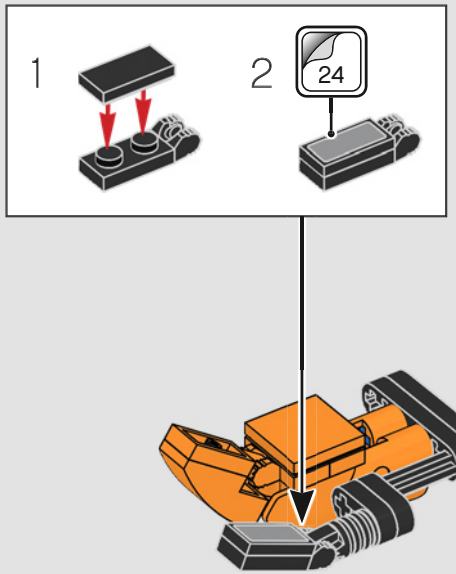

309

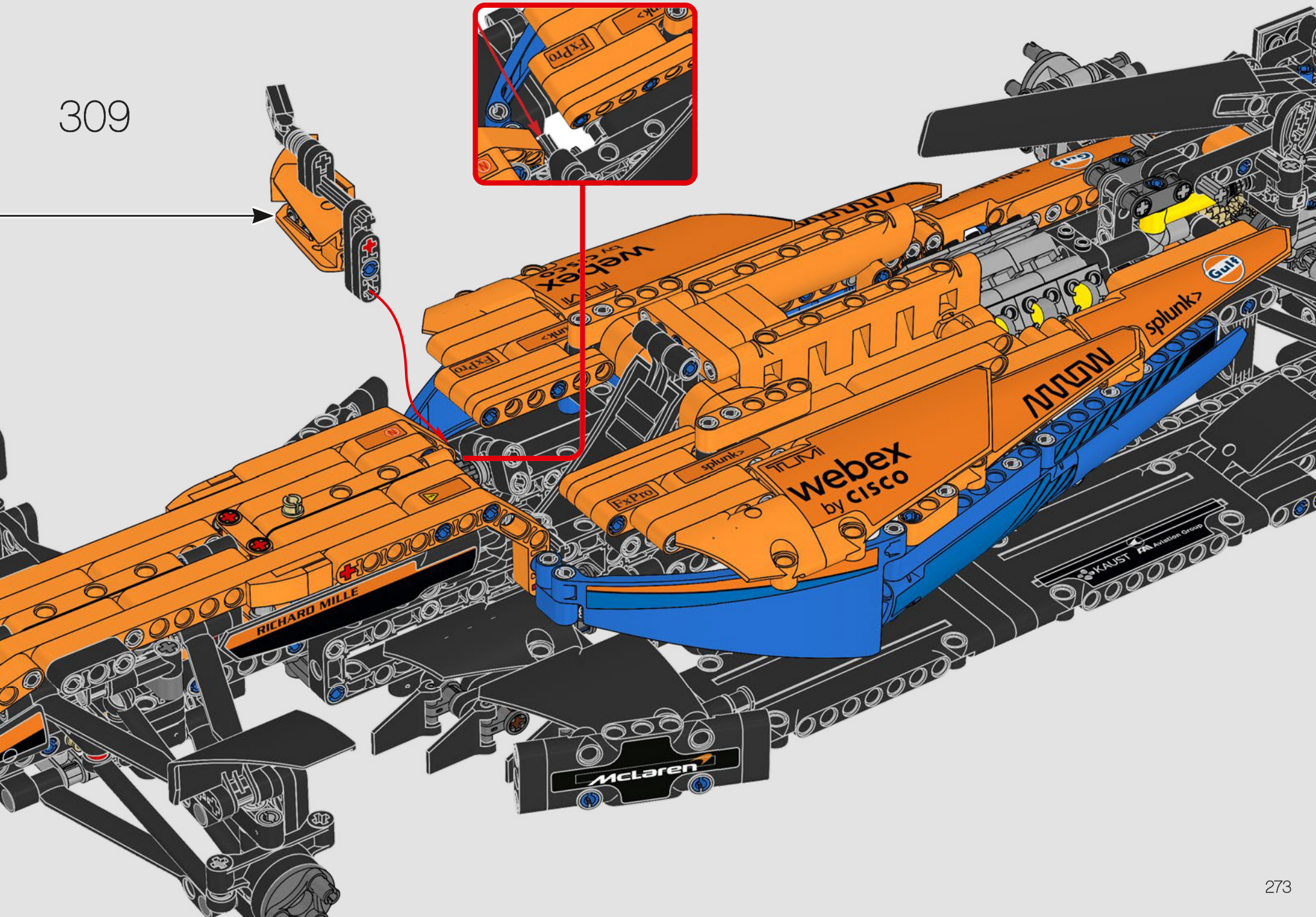
webex
by cisco
splunk>
Gulf
ExPro
RICHARD MILLE
McLaren
KAUST
FIA Aviation Group

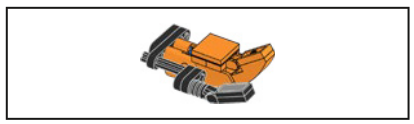

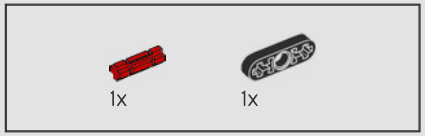

310

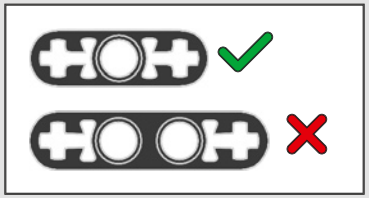

311

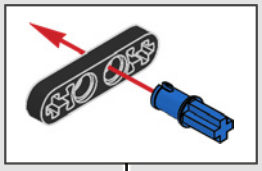

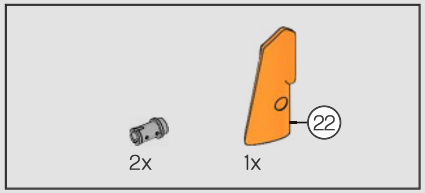

312

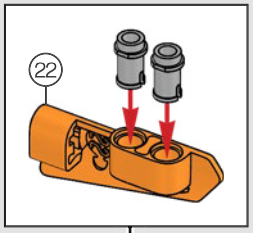

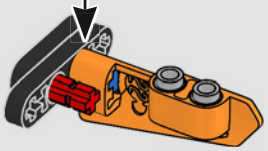

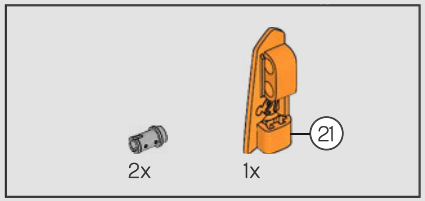

313

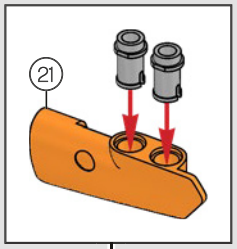

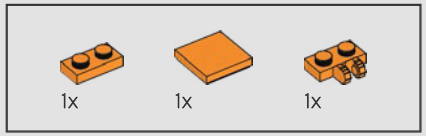

314

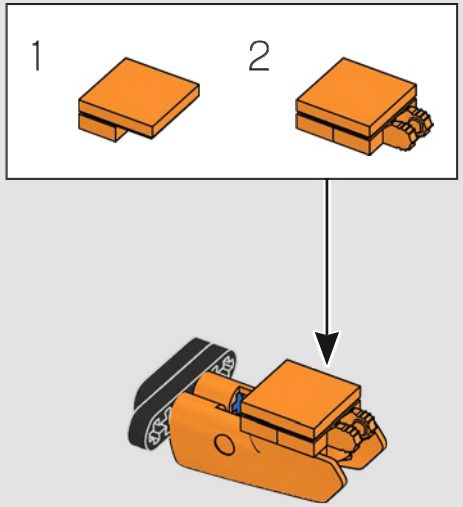

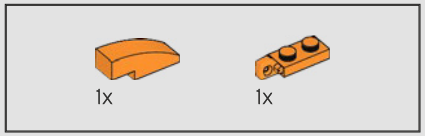

315

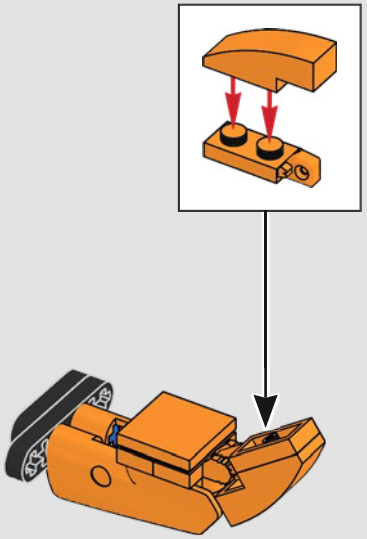

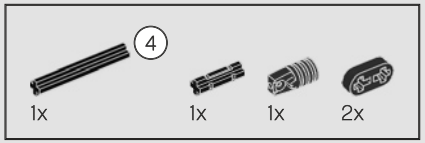

316

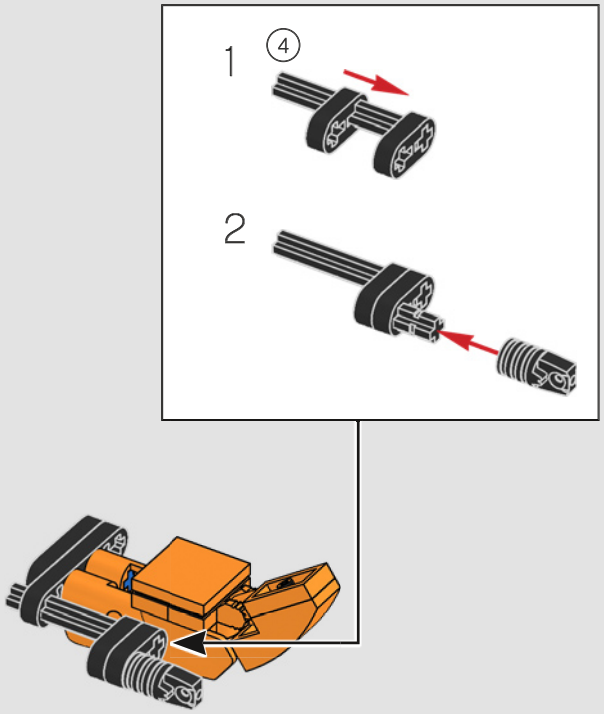

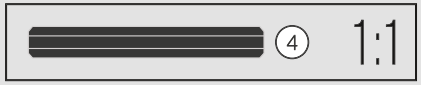

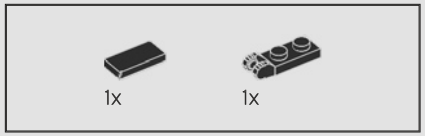

317

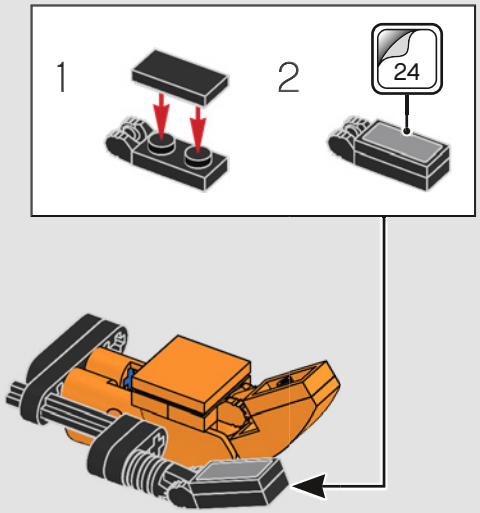

318

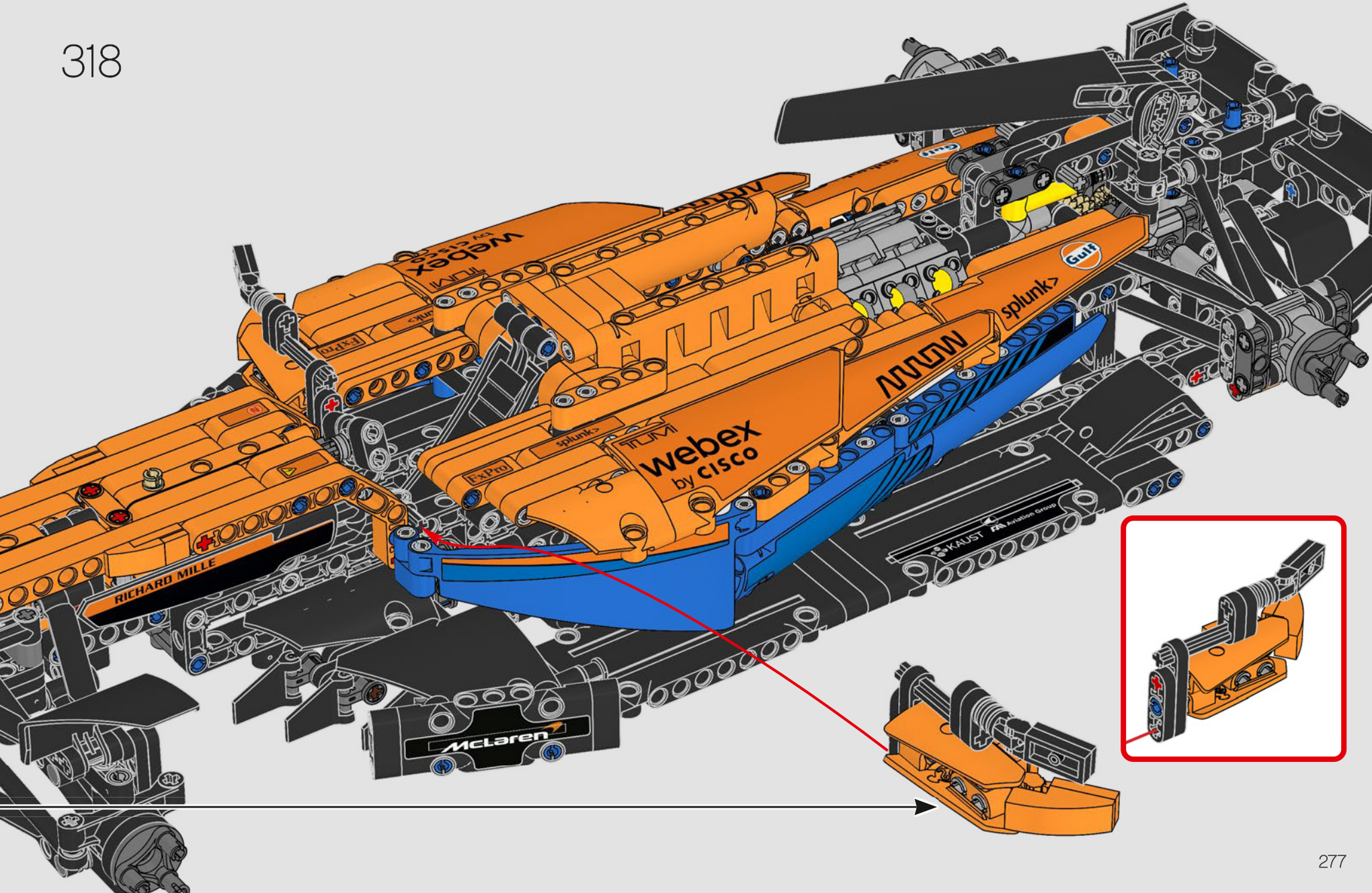
webex
by cisco
splunk>
Gulf
RICHARD MILLE
McLaren
KAUST
Aviation Group

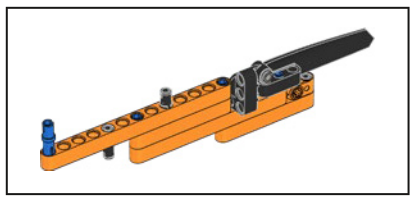

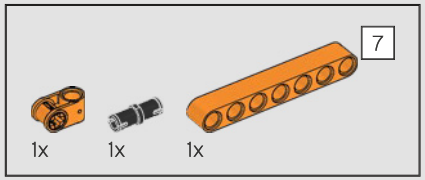

319

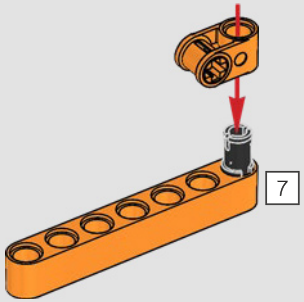

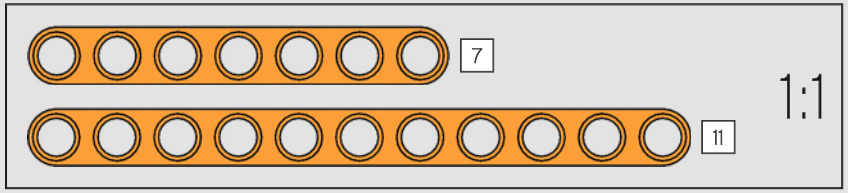

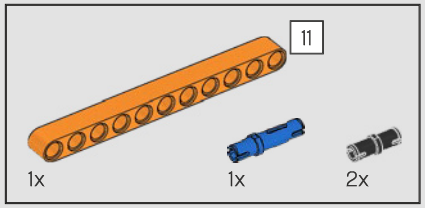

320

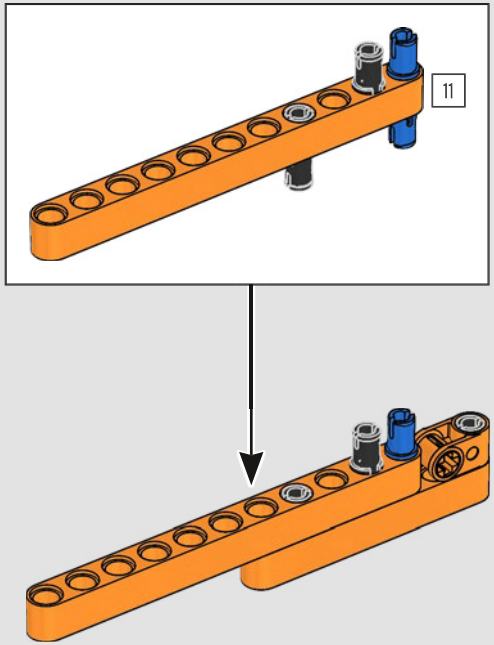

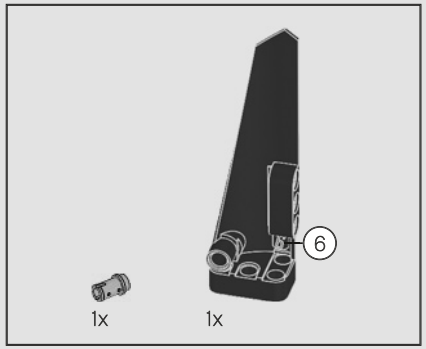

321

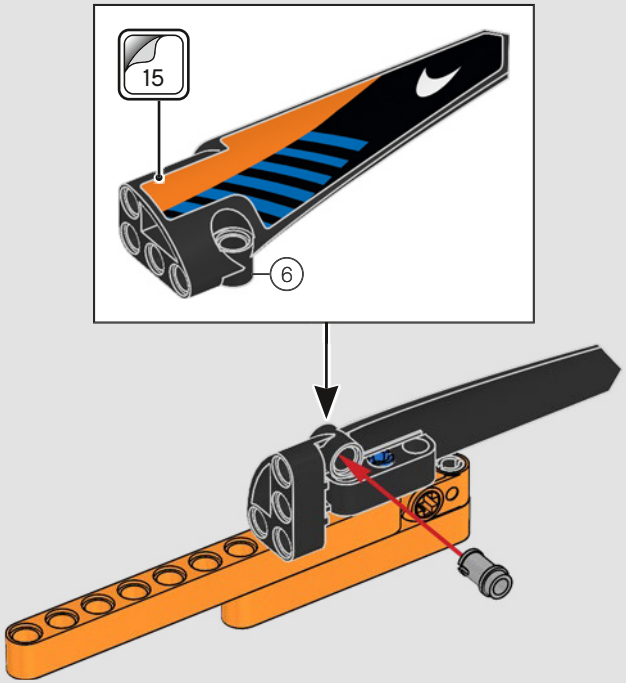

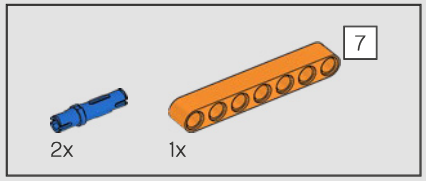

322

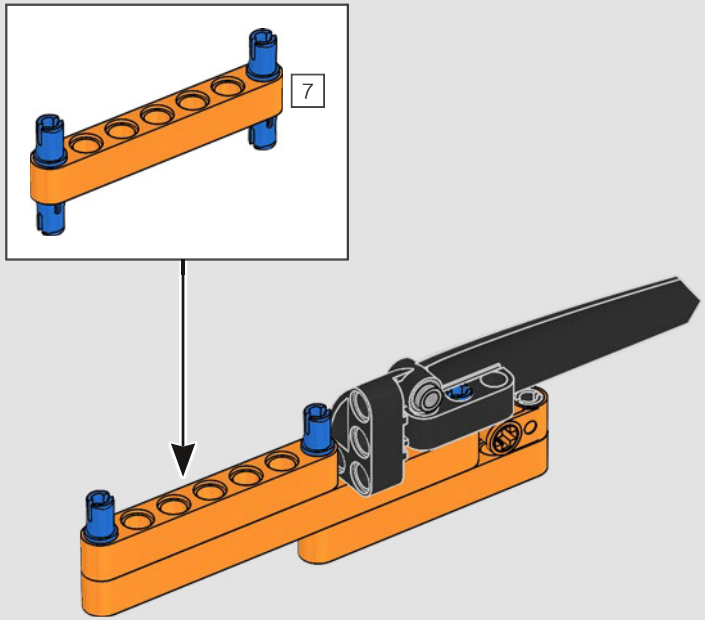

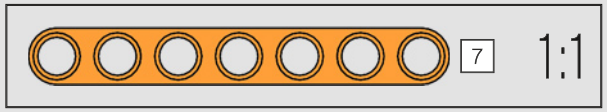

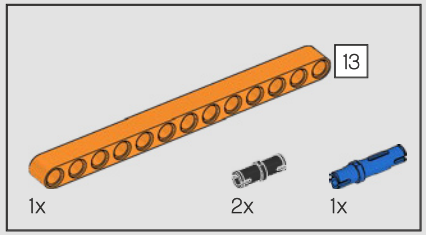

323

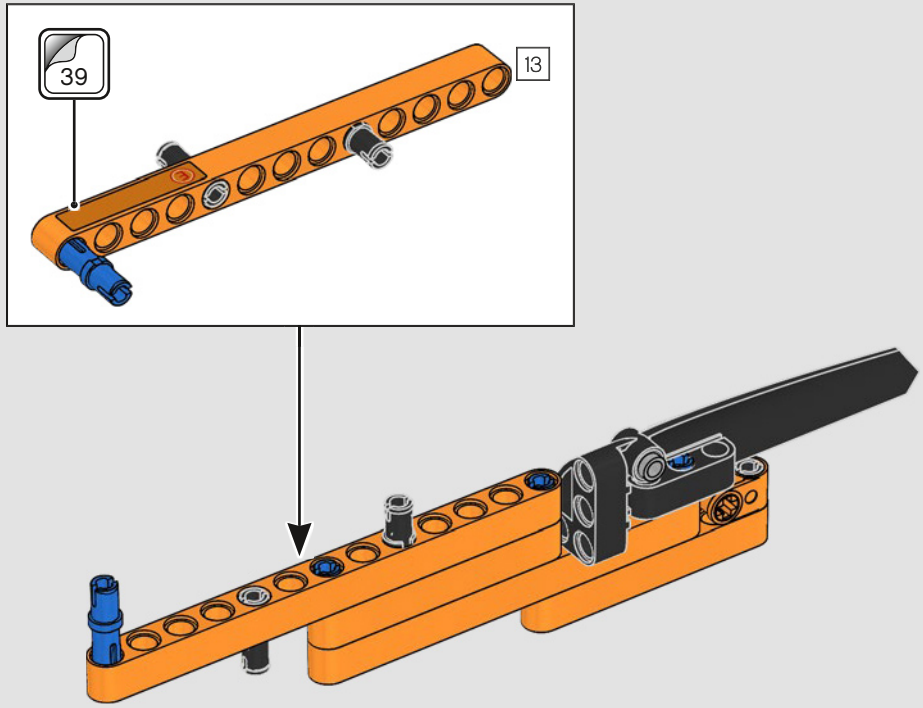

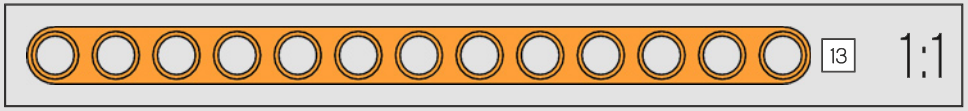

324

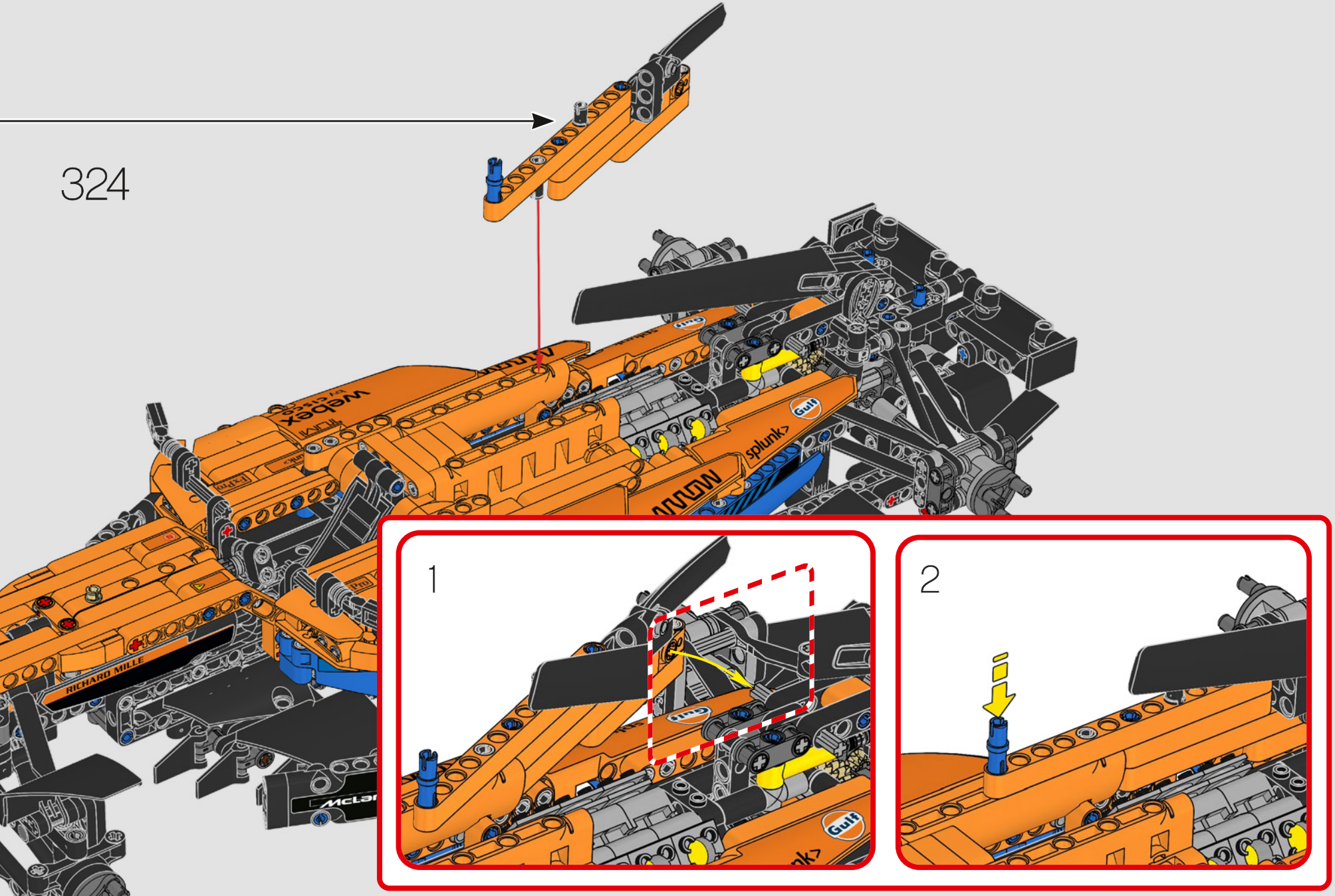

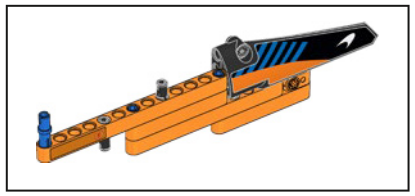

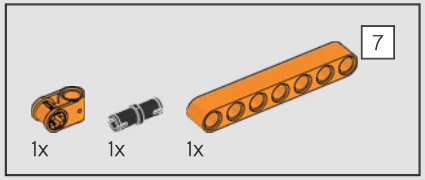

325

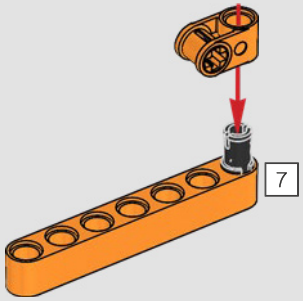

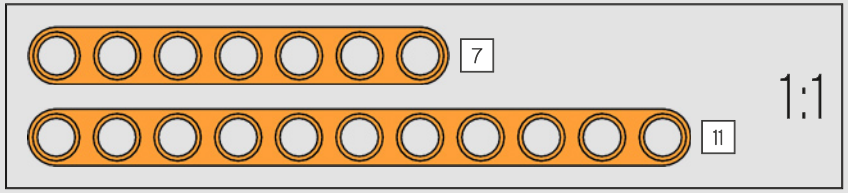

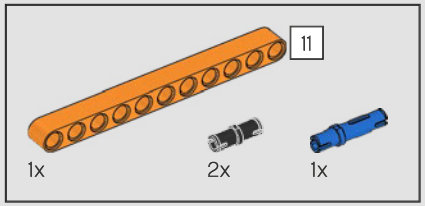

326

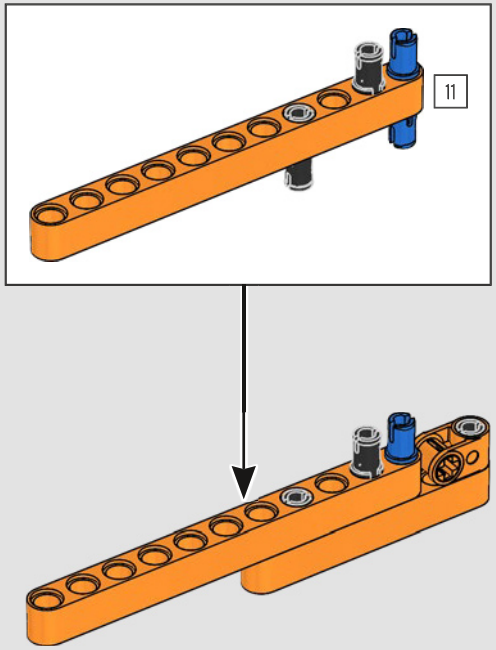

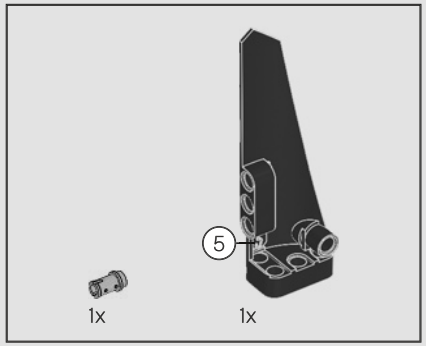

327

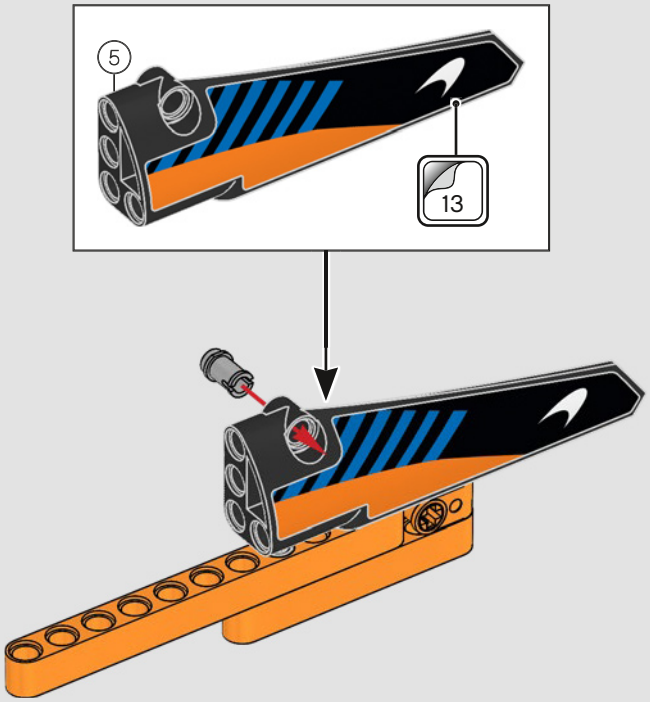

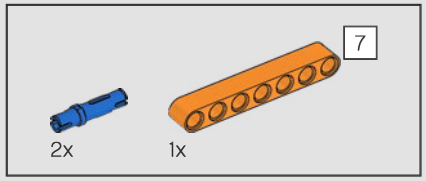

328

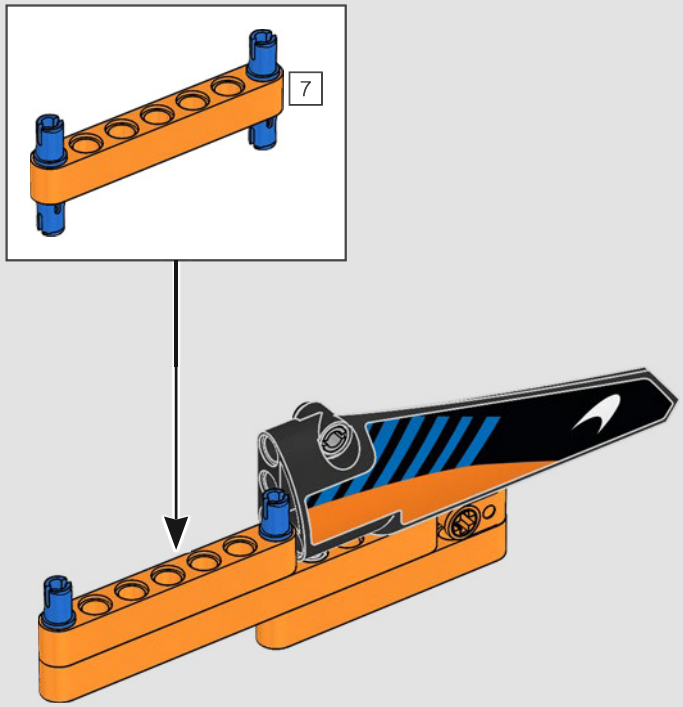

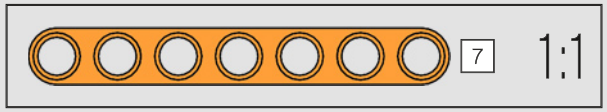

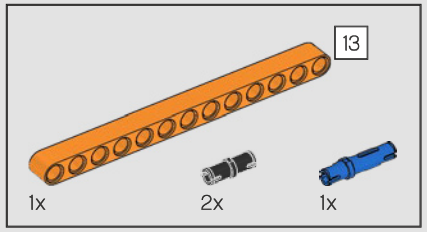

329

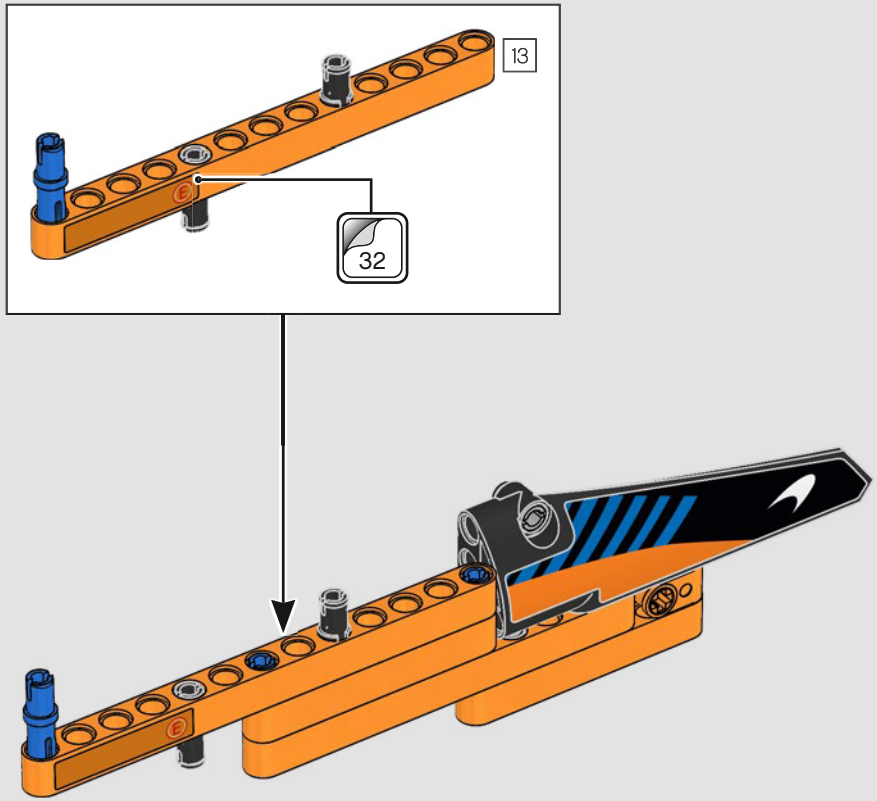

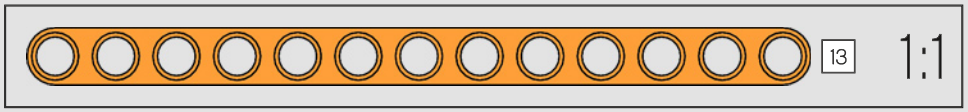

330

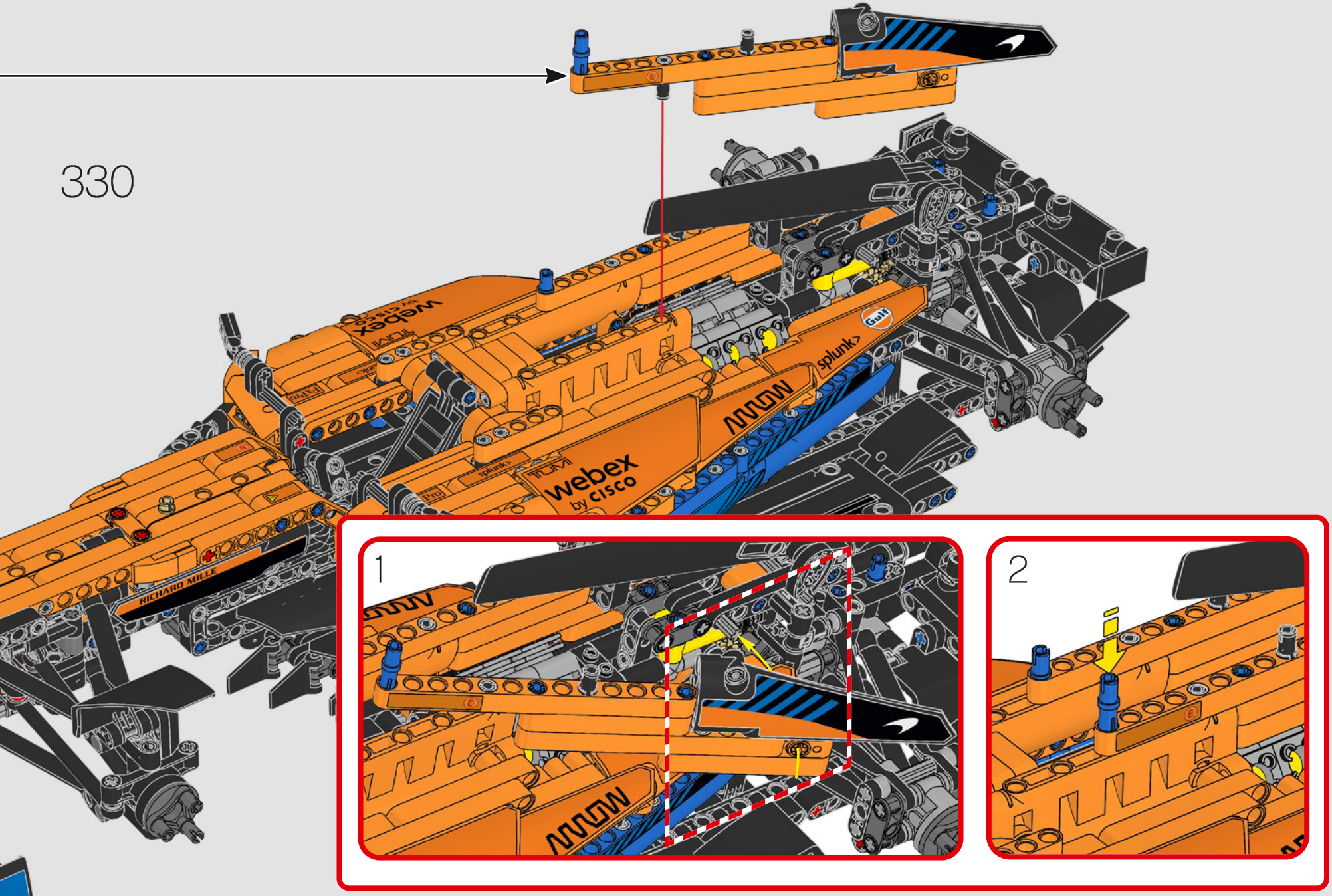

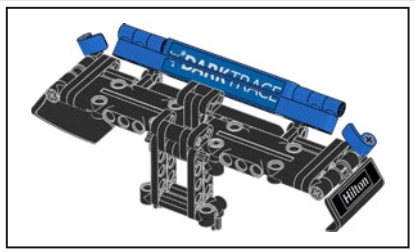

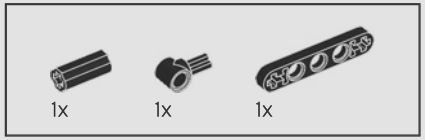

331

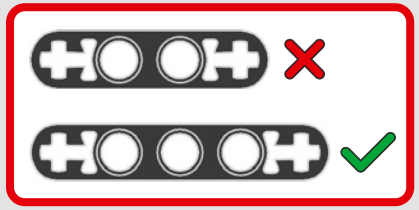

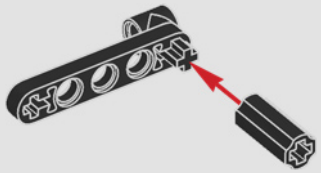

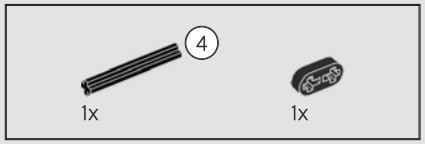

332

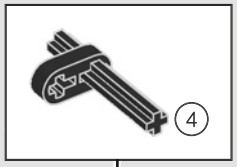

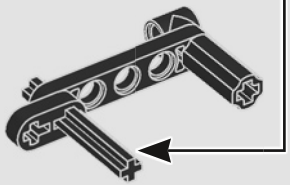

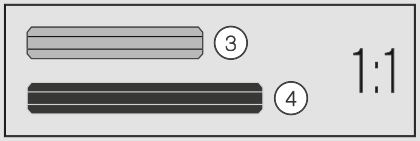

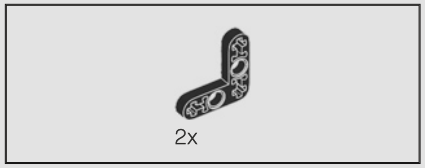

333

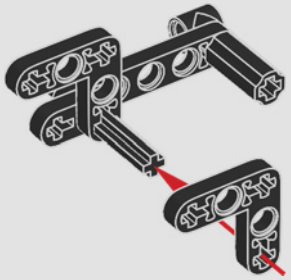

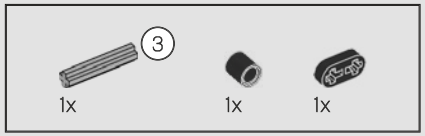

334

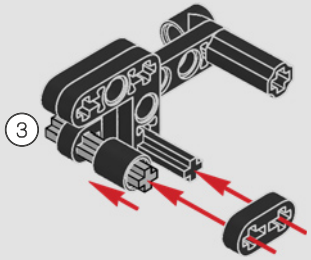

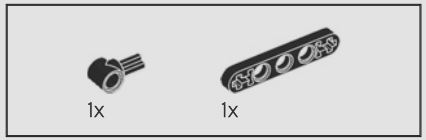

335

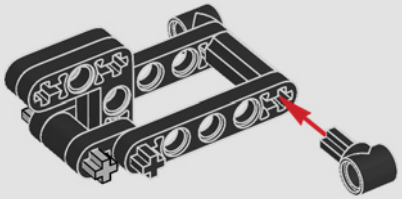

336

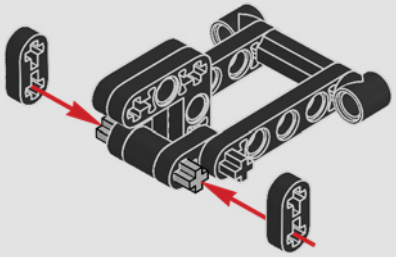

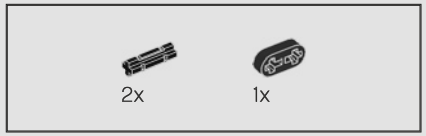

337

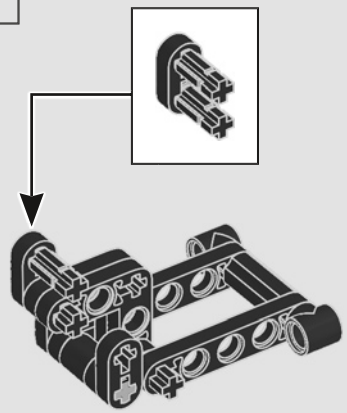

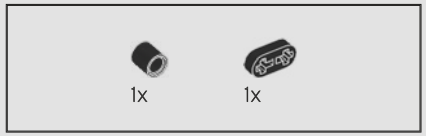

338

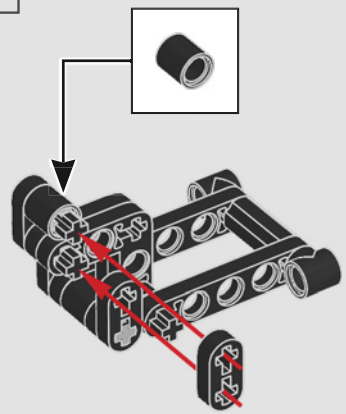

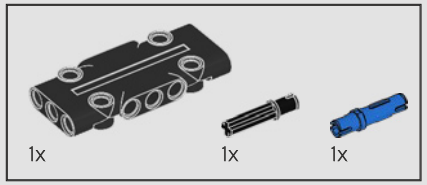

339

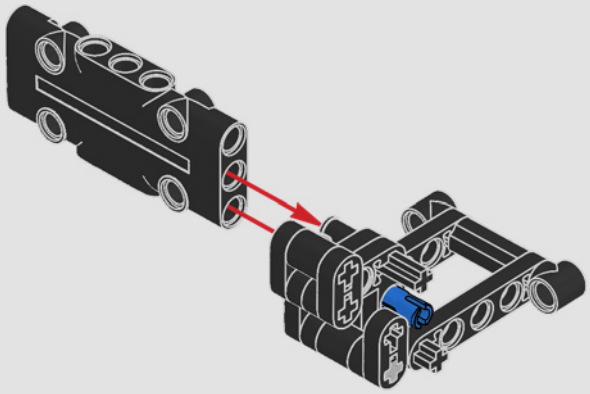

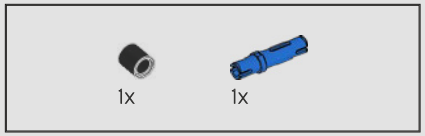

340

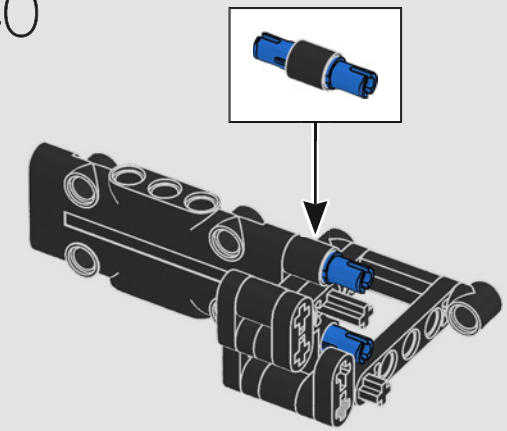

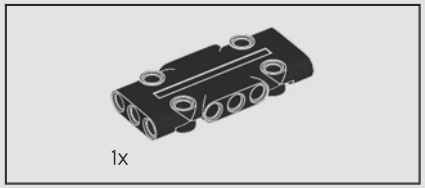

341

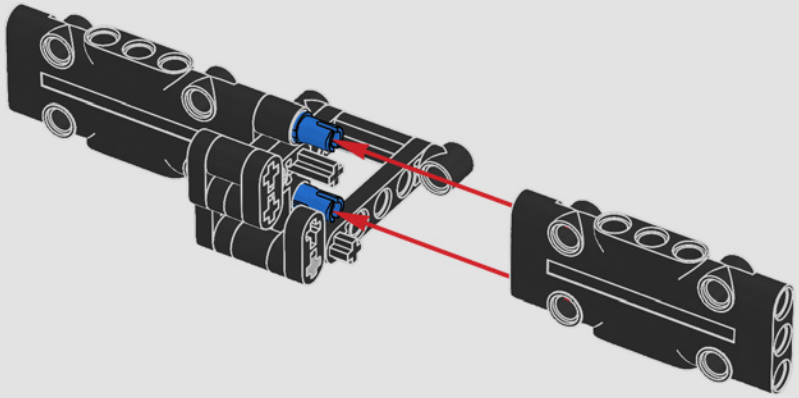

342

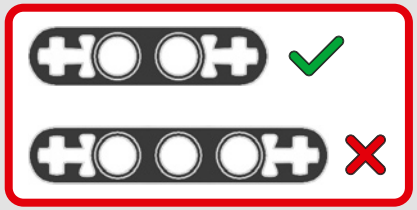

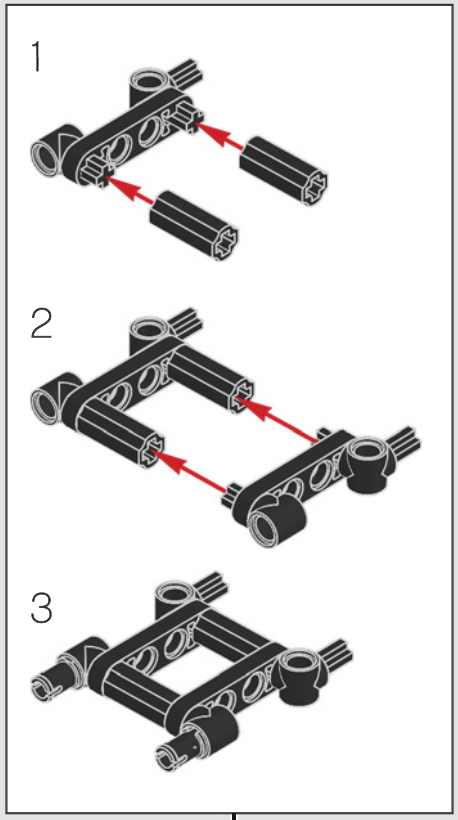

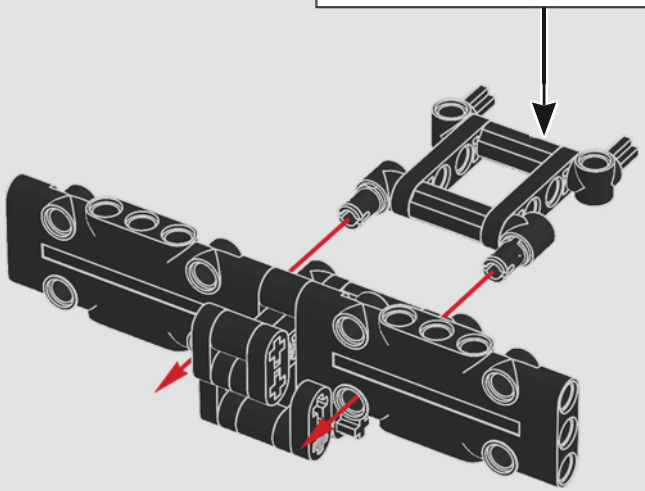

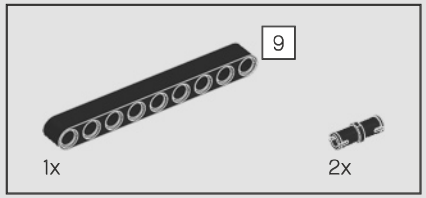

343

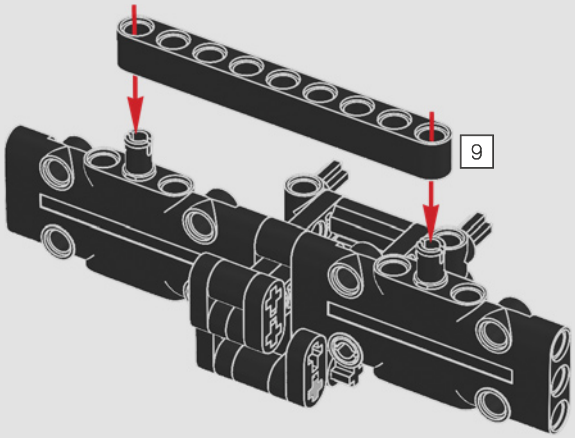

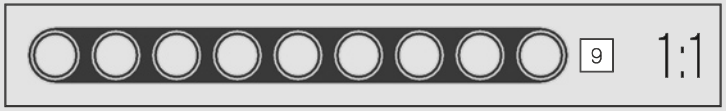

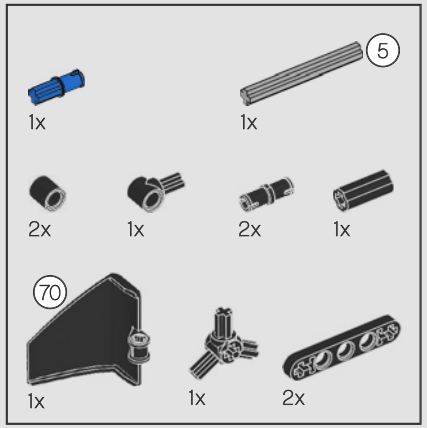

344

1

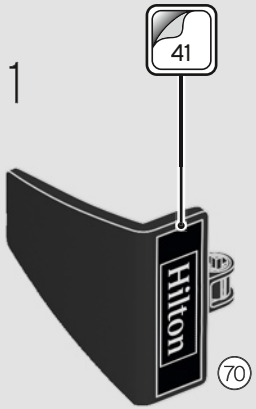

2

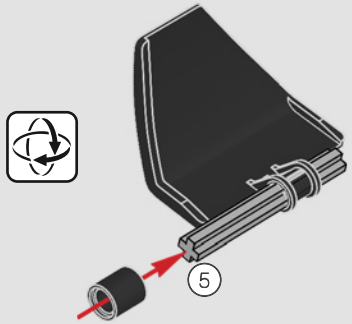

3

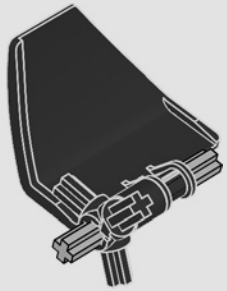

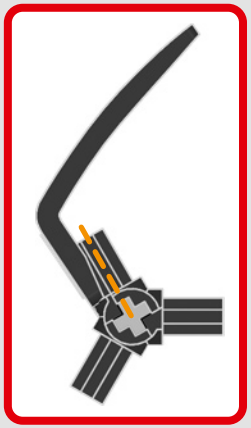

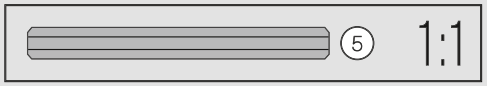

4

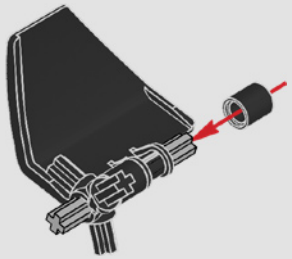

5

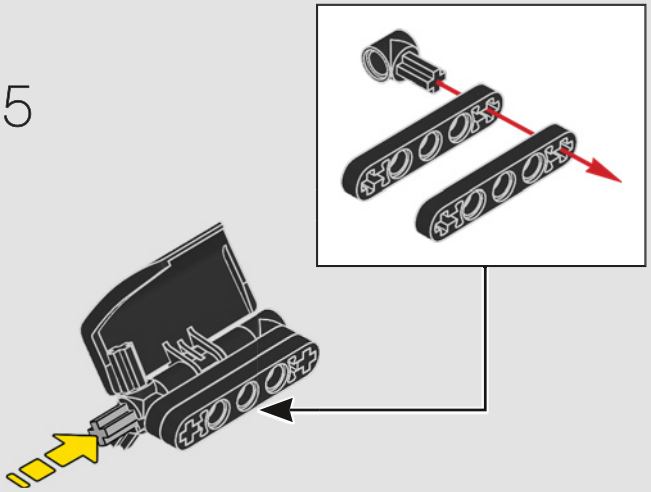

6

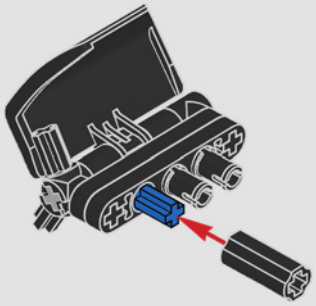

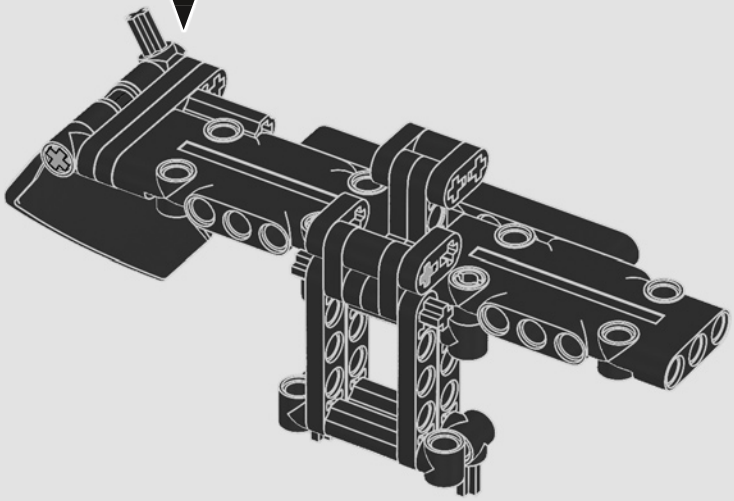

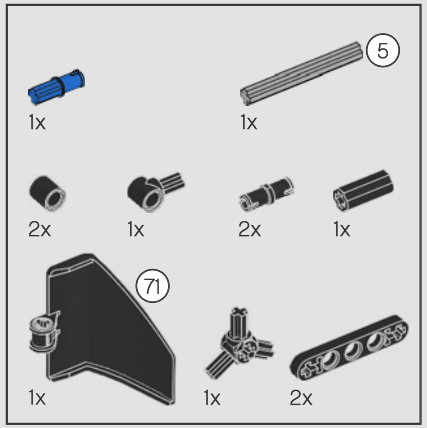

345

1

2

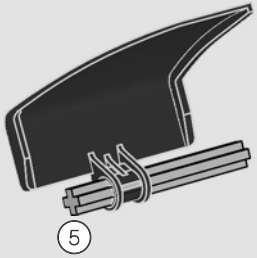

3

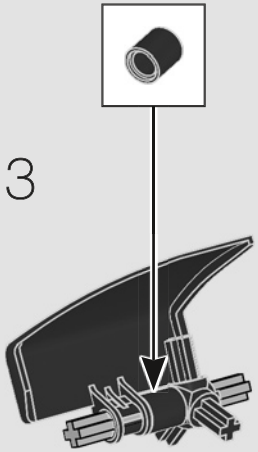

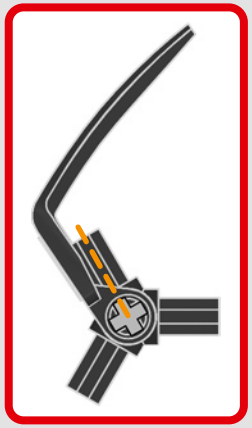

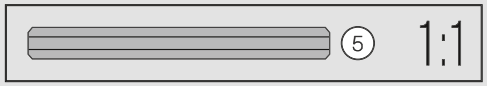

4

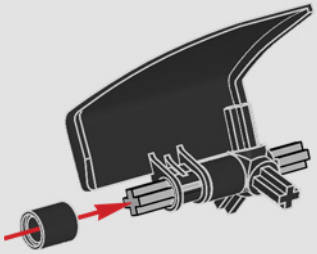

5

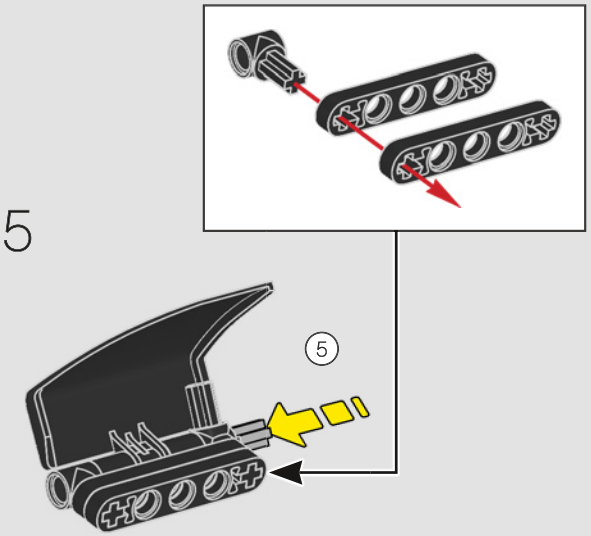

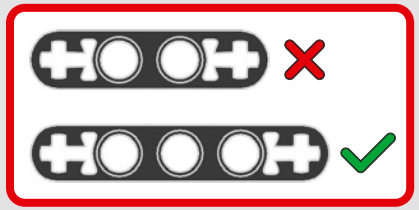

6

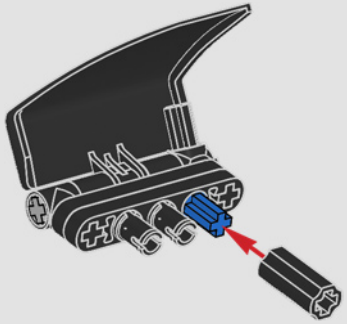

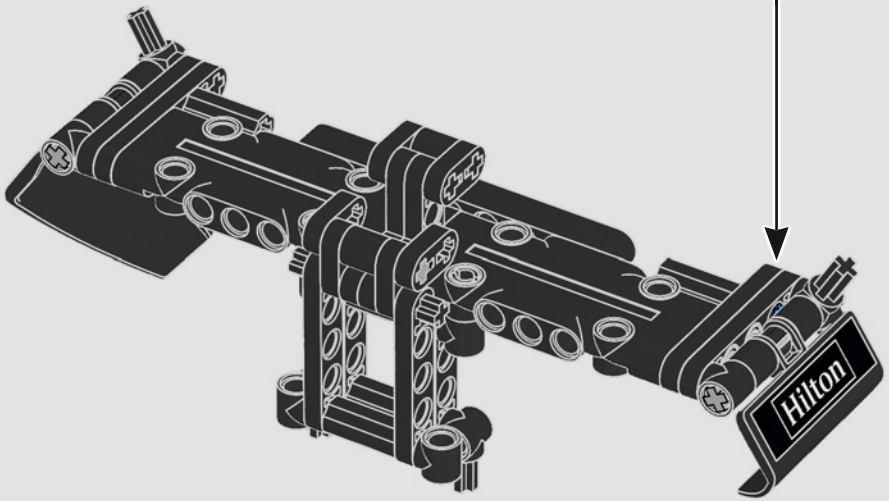

346

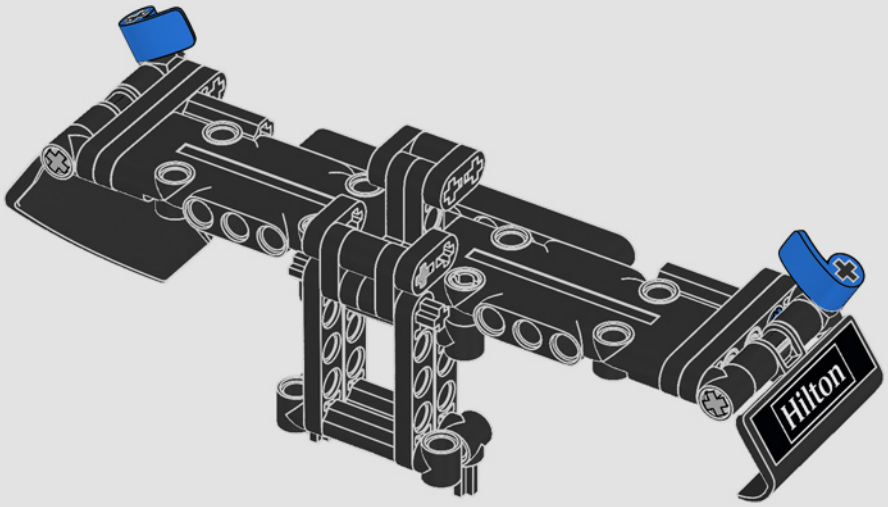

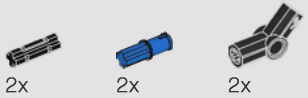

347

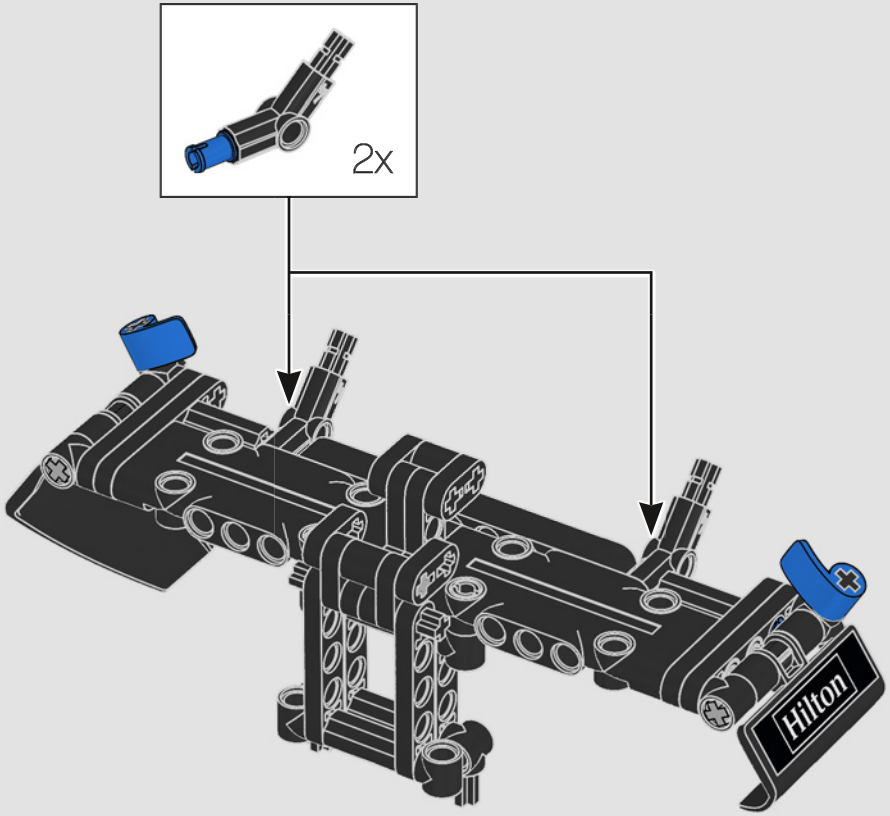

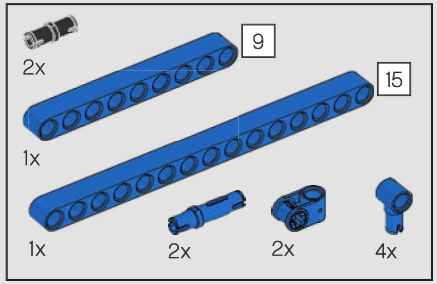

348

1

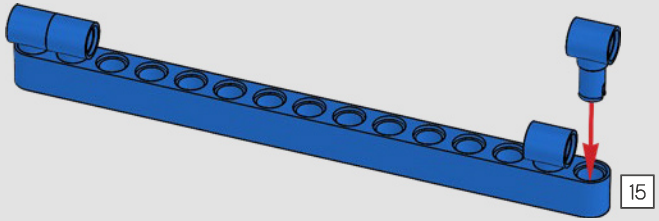

2

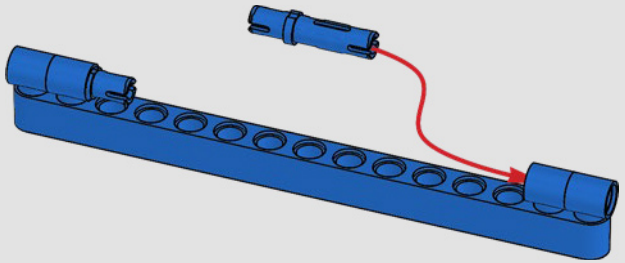

3

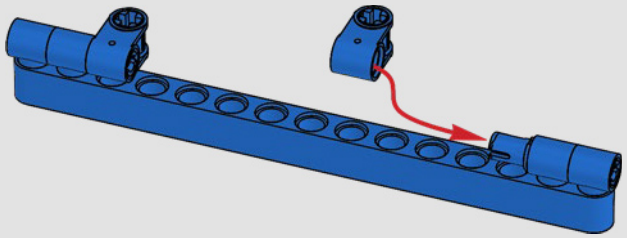

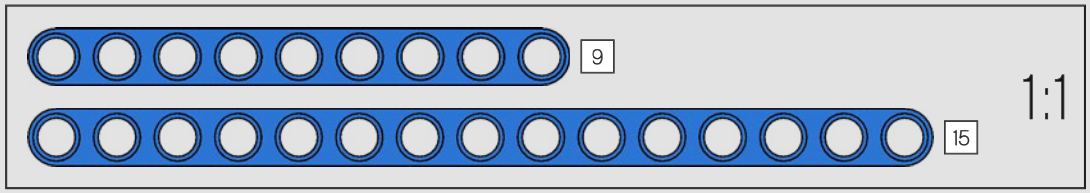

4

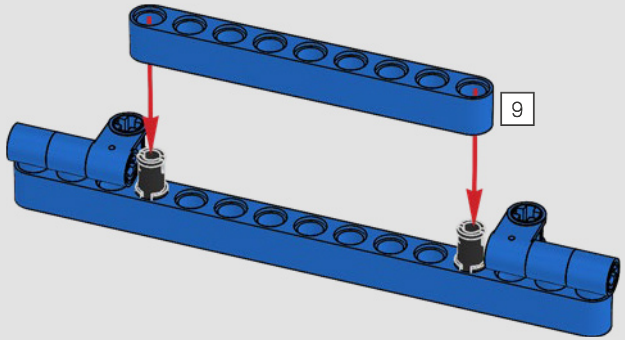

5

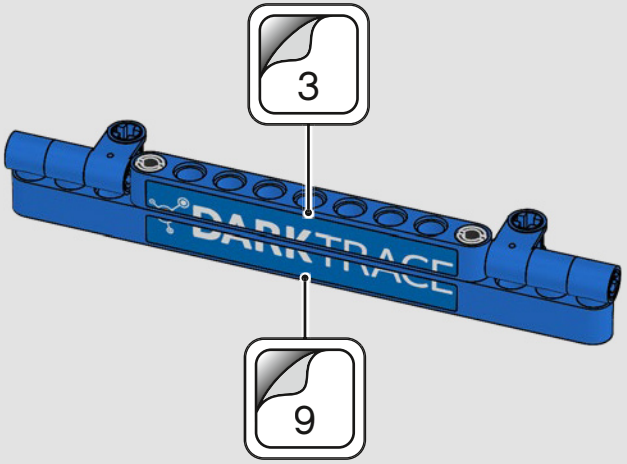

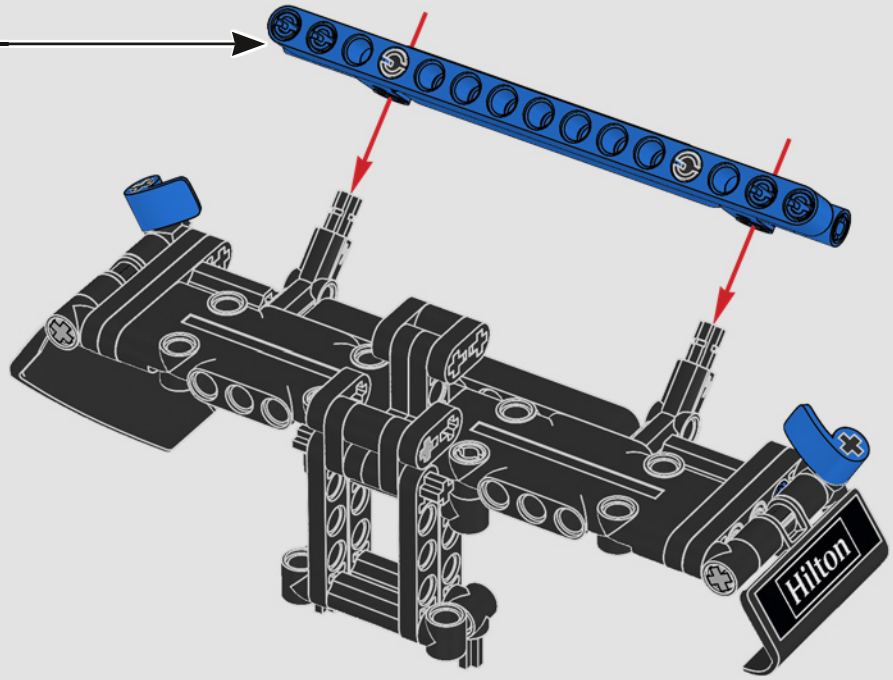

349

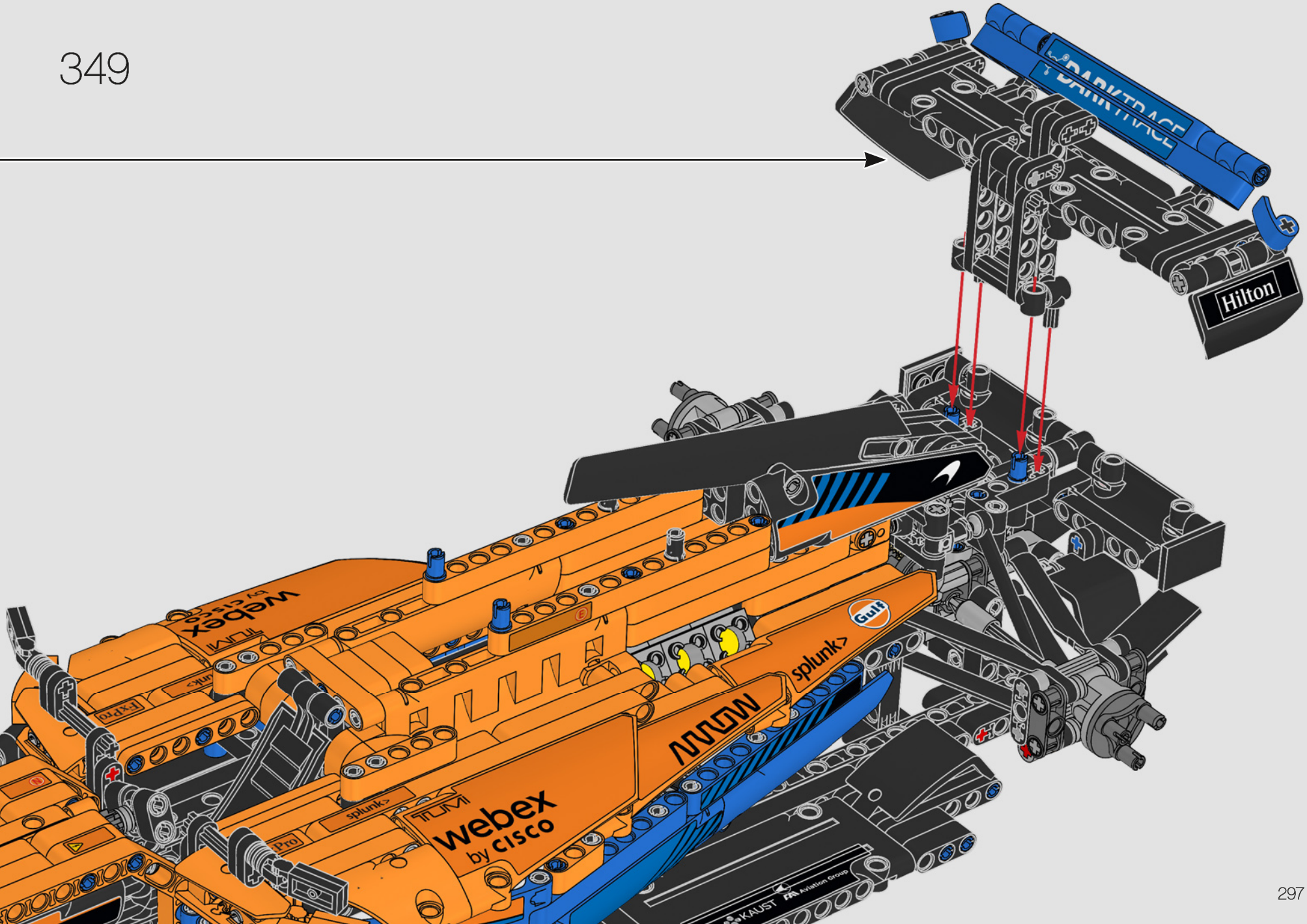
DARKTRACE
Hilton
webex
by cisco
splunk>
Gulf
KAUST
FIA Aviation Group

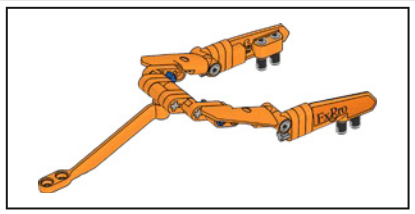

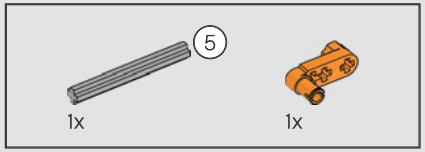

350

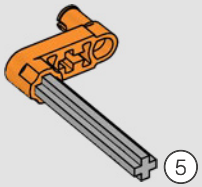

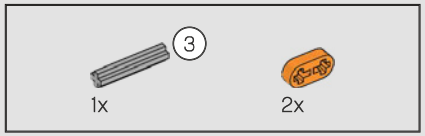

351

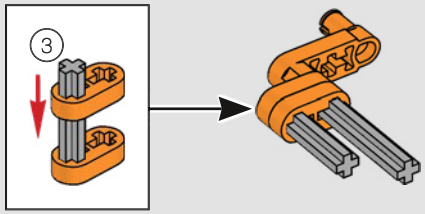

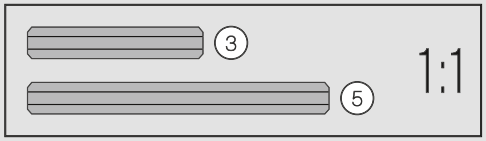

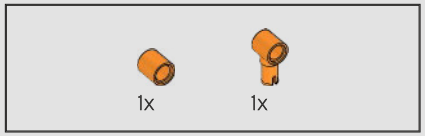

352

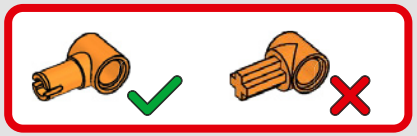

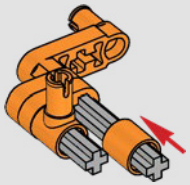

353

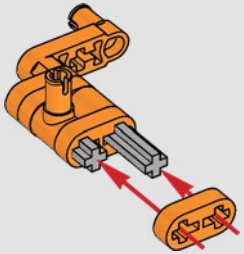

354

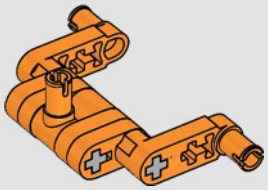

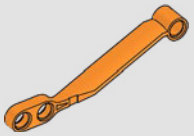

355

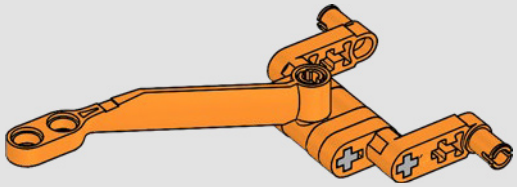

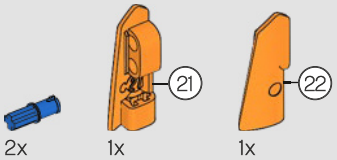

356

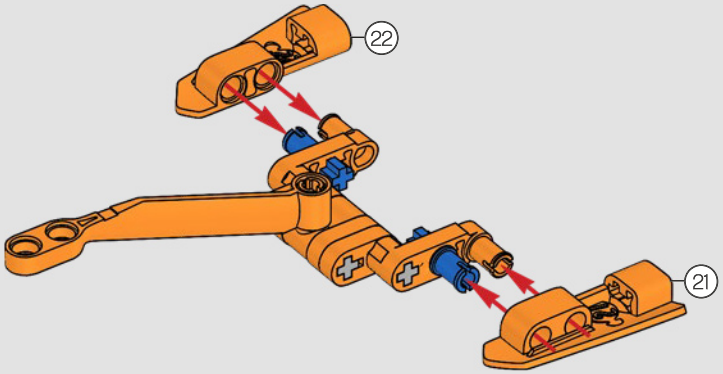

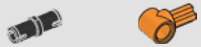

357

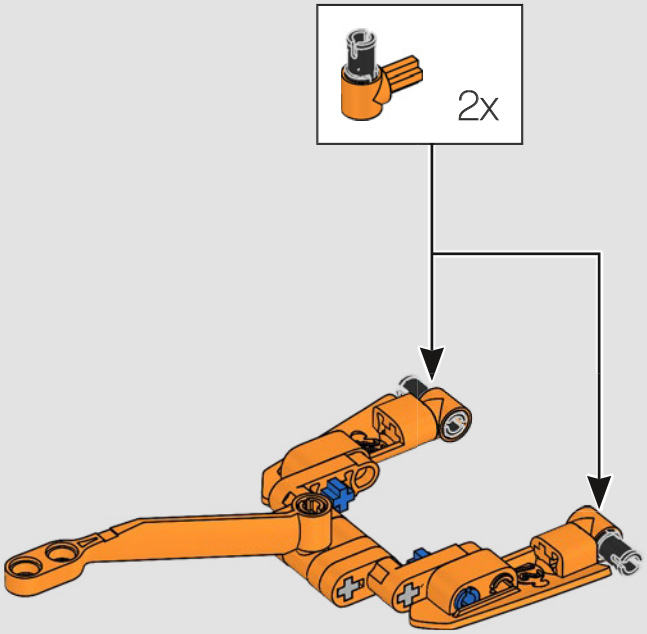

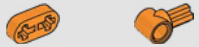

358

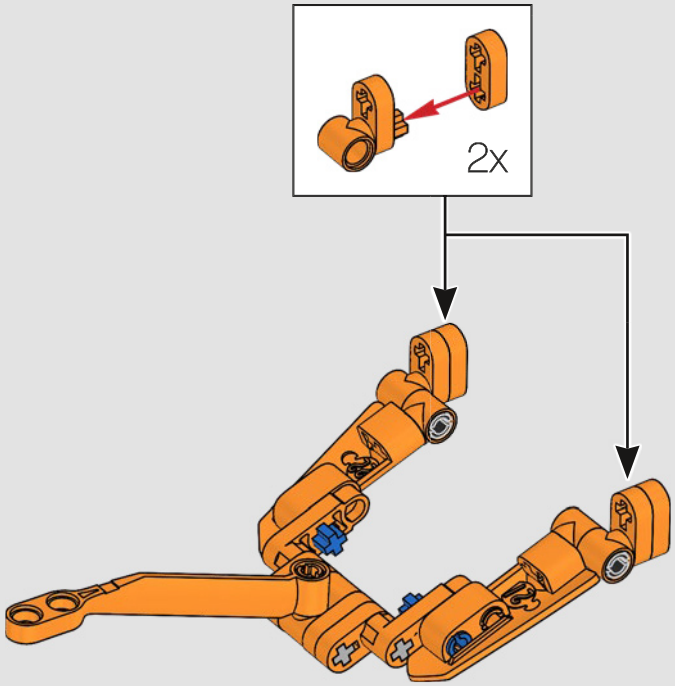

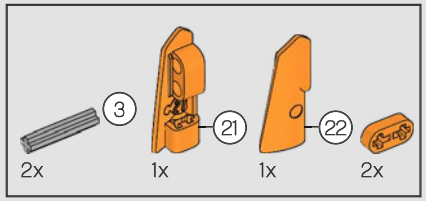

359

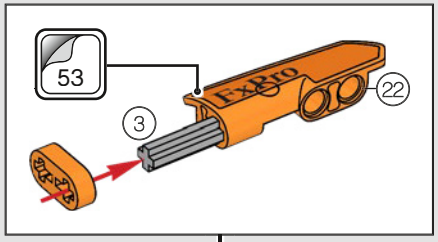

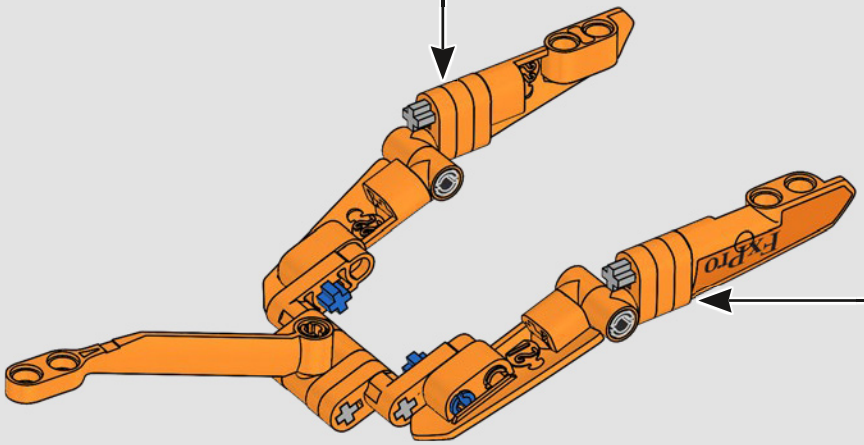

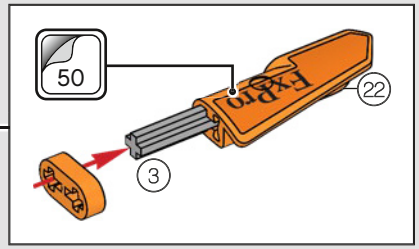

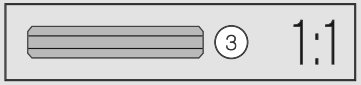

4x

360

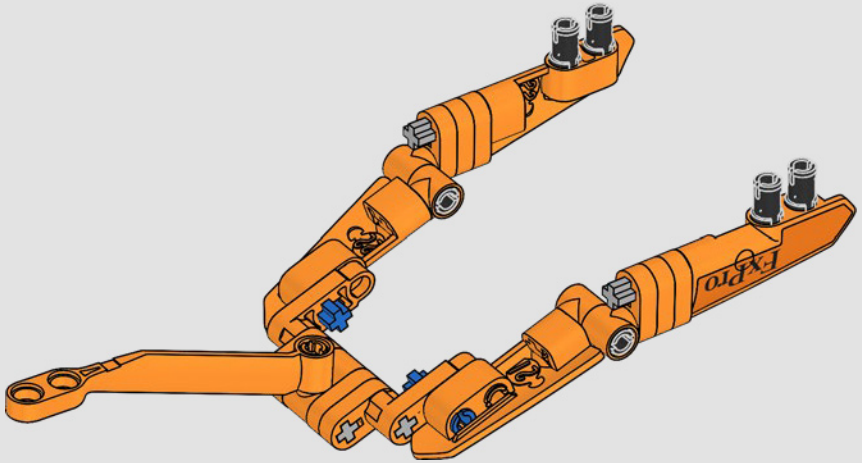

361

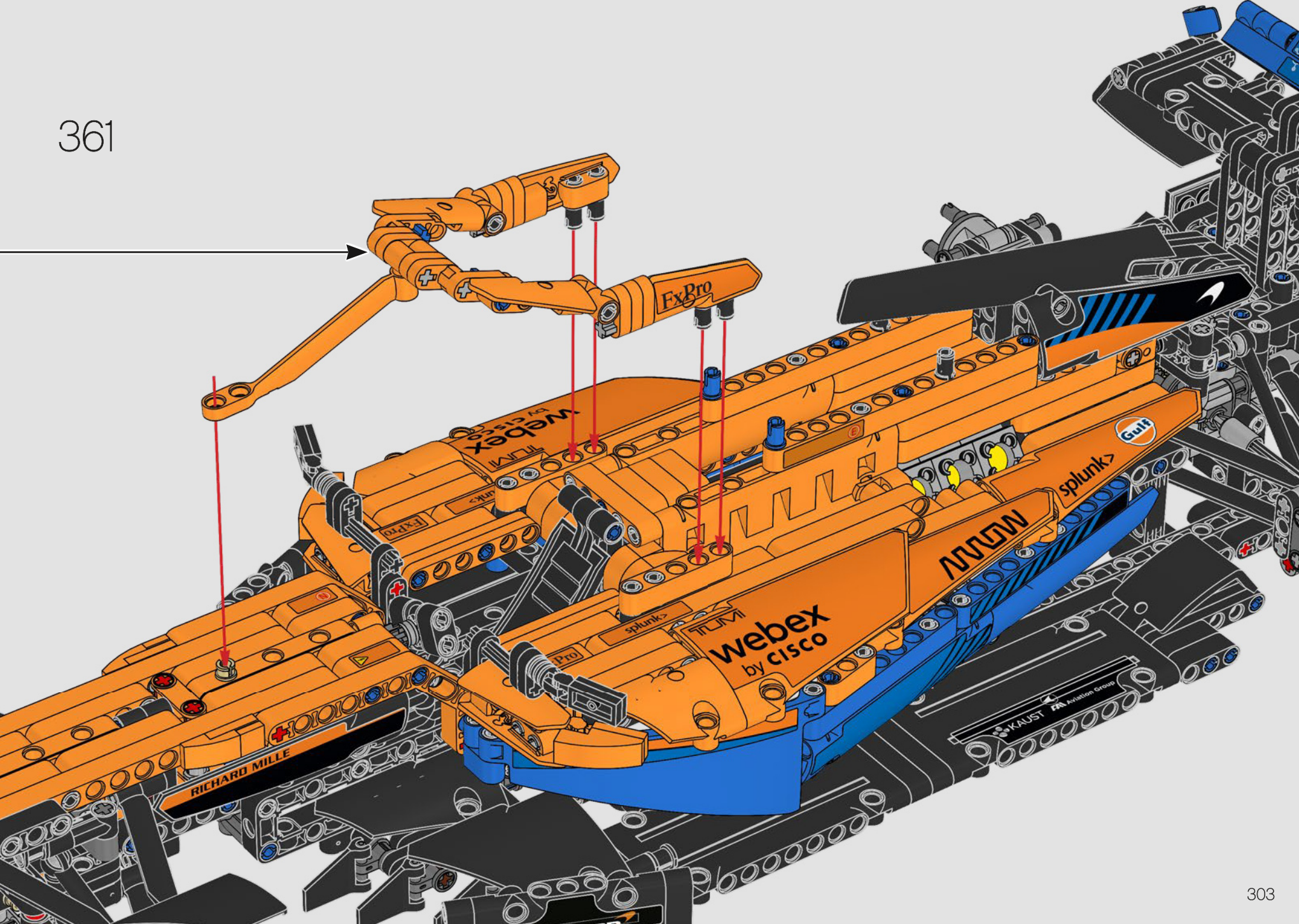
FxPro
webex
by cisco
splunk>
Gulf
RICHARD MILLE
KAUST
Aviation Group

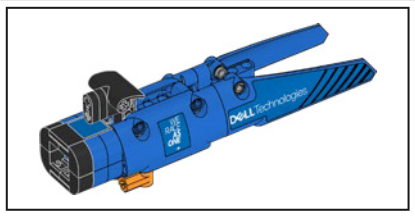

362

363

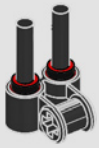

364

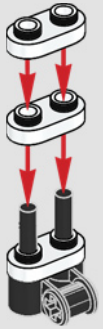

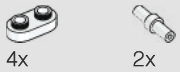

365

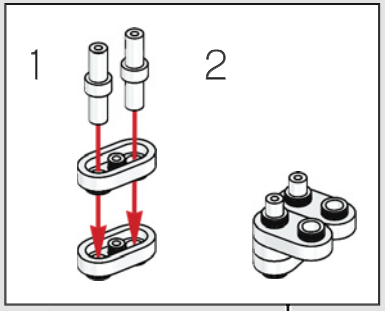

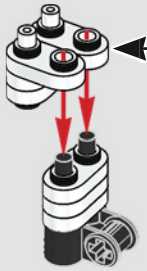

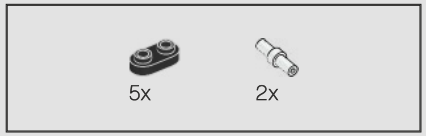

366

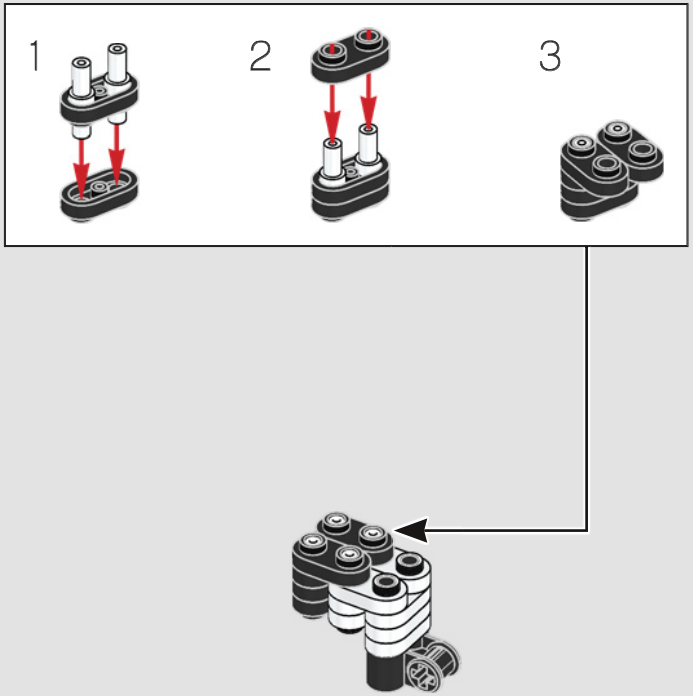

367

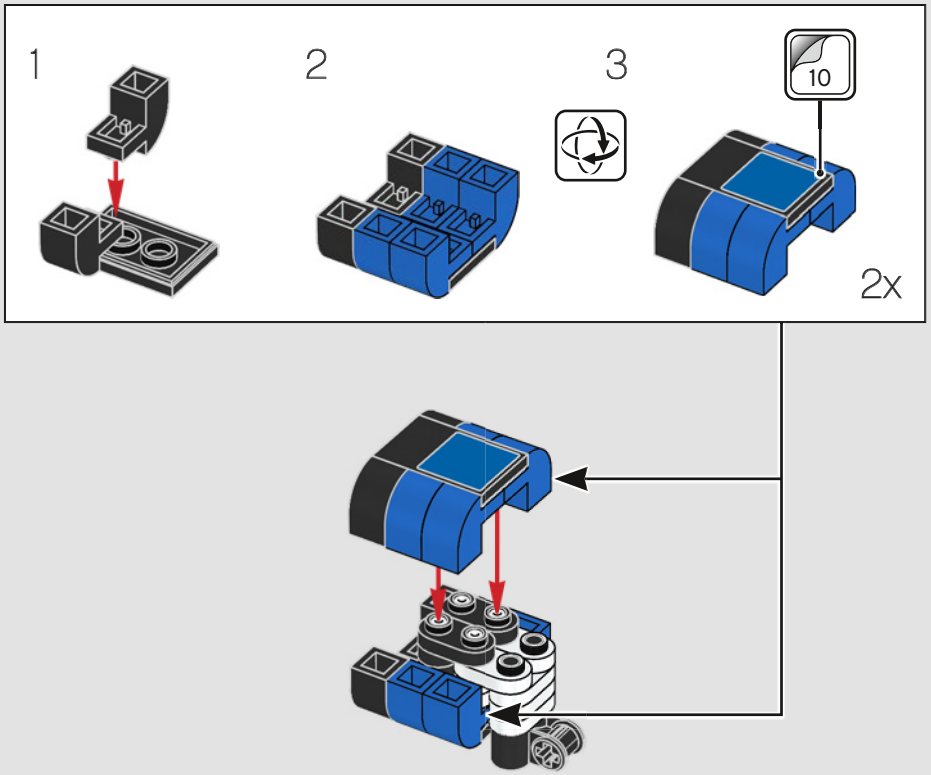

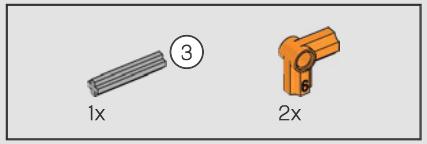

368

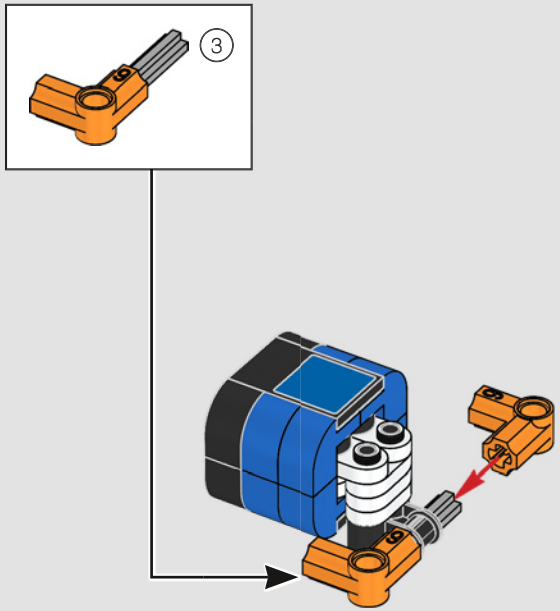

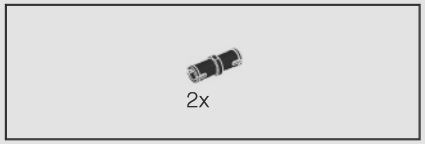

369

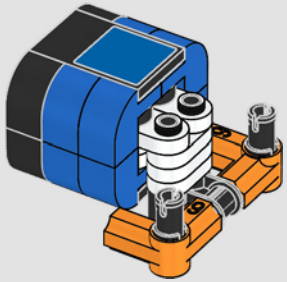

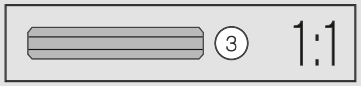

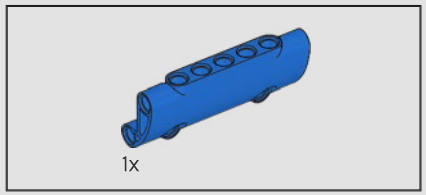

370

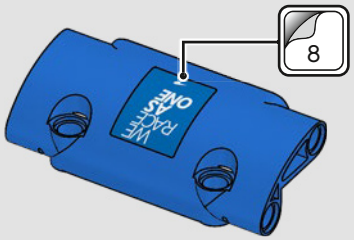

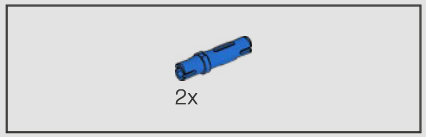

371

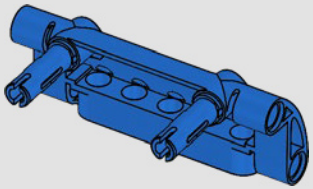

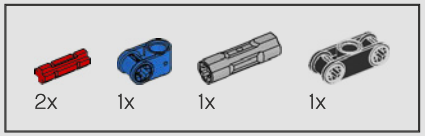

372

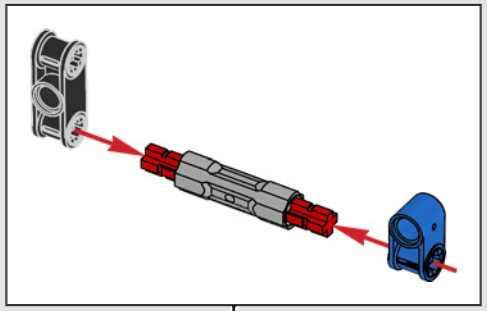

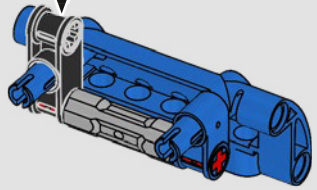

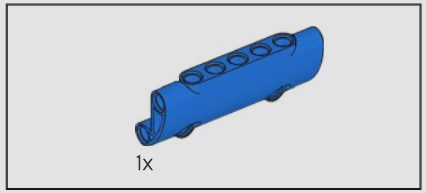

373

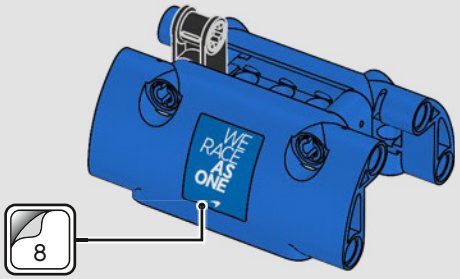

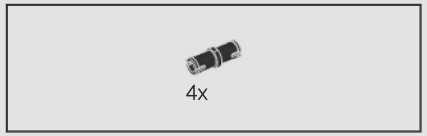

374

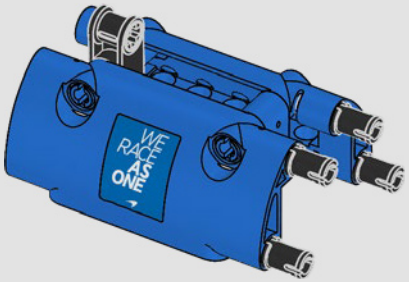

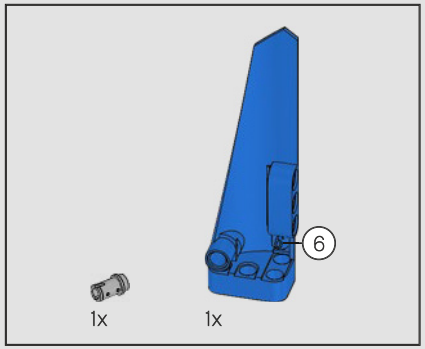

375

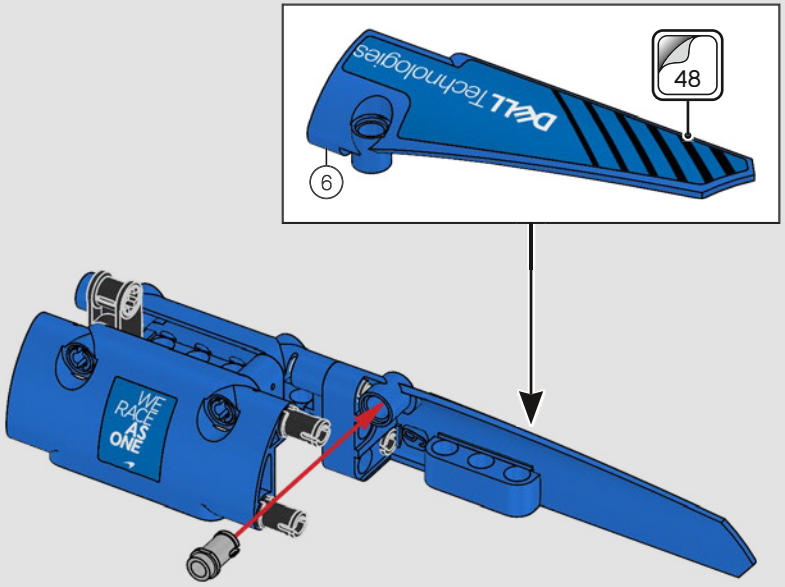

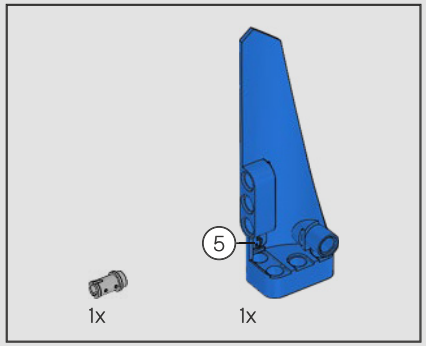
5
1x
1x

376

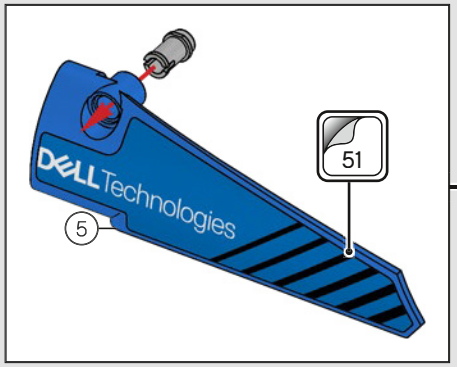
51
5
DELL Technologies

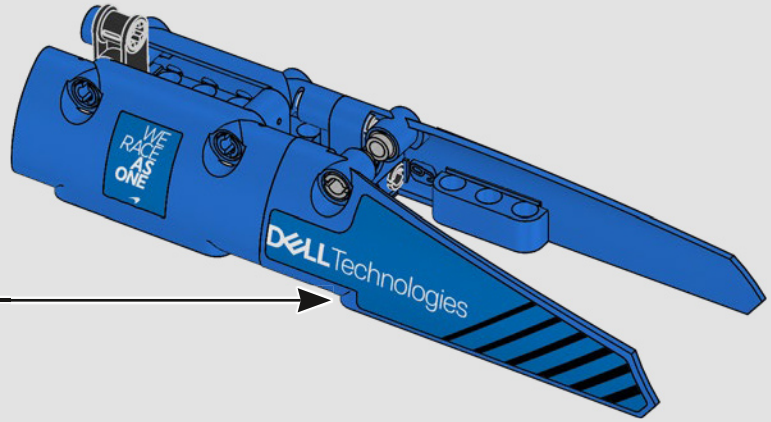
DELL Technologies

377

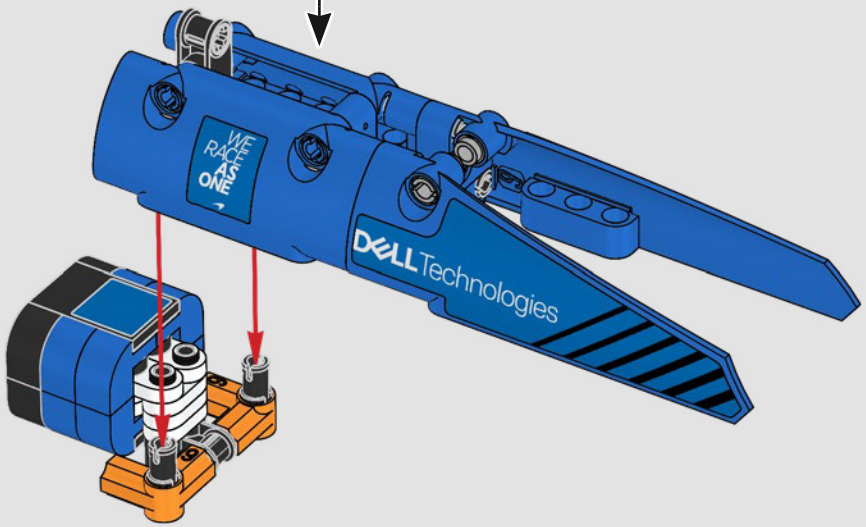
DELL Technologies

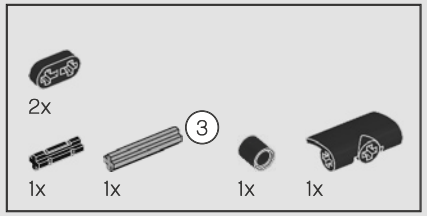

378

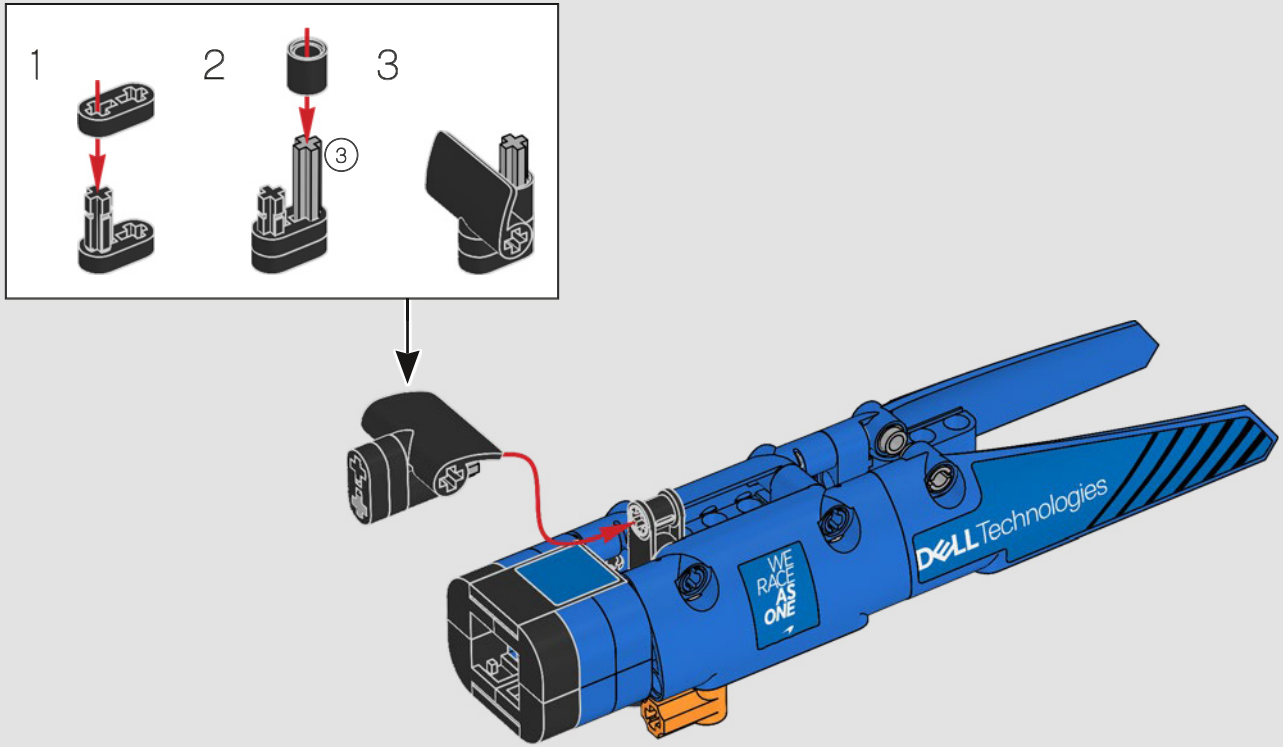

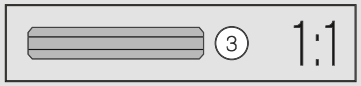

379

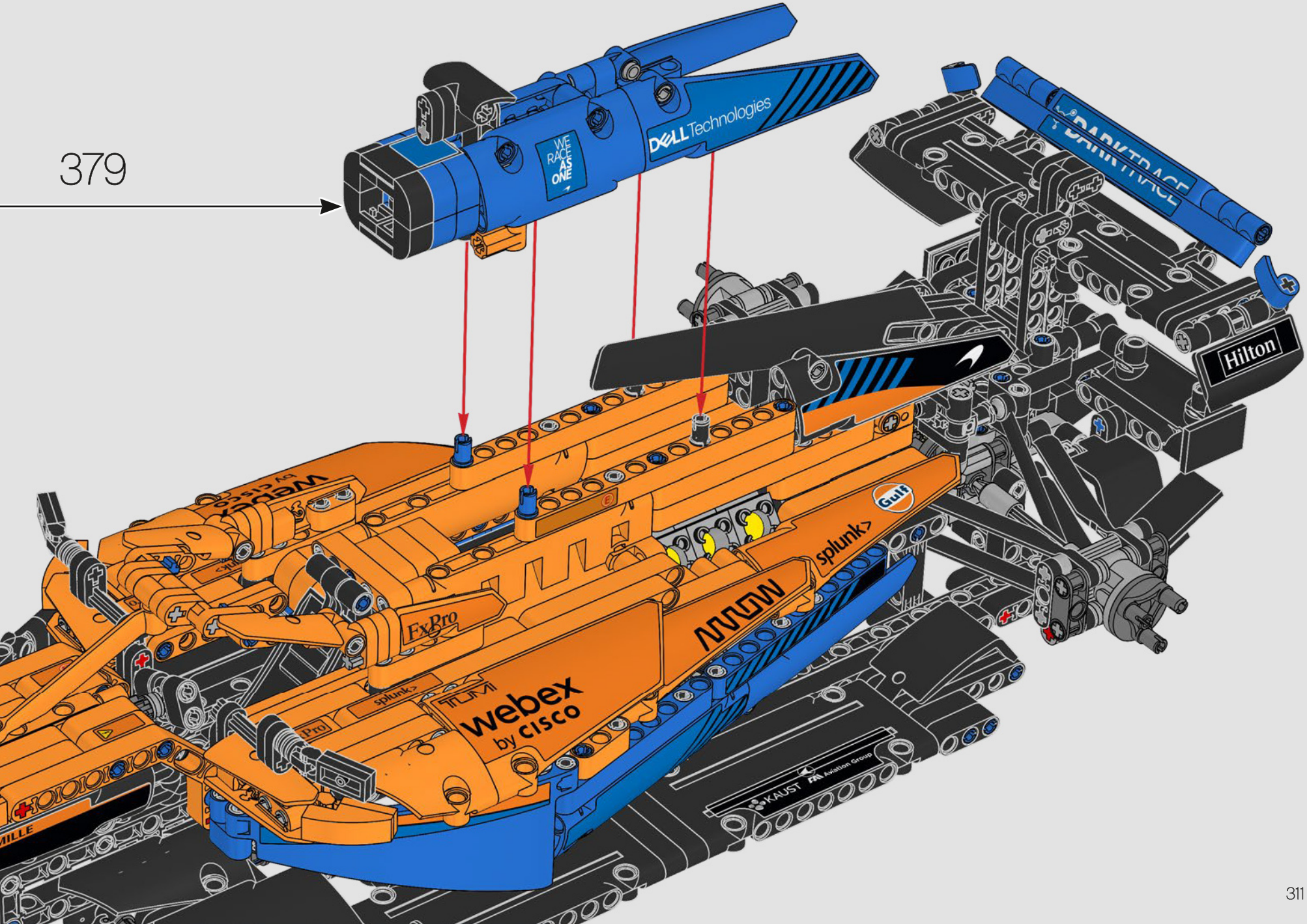
DELL Technologies
WE RACE AS ONE
Hilton
Gulf
splunk>
webex by cisco
FxPro
KAUST
FA Aviation Group

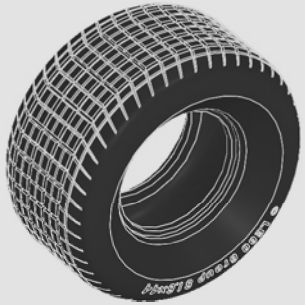

4x

4x

380

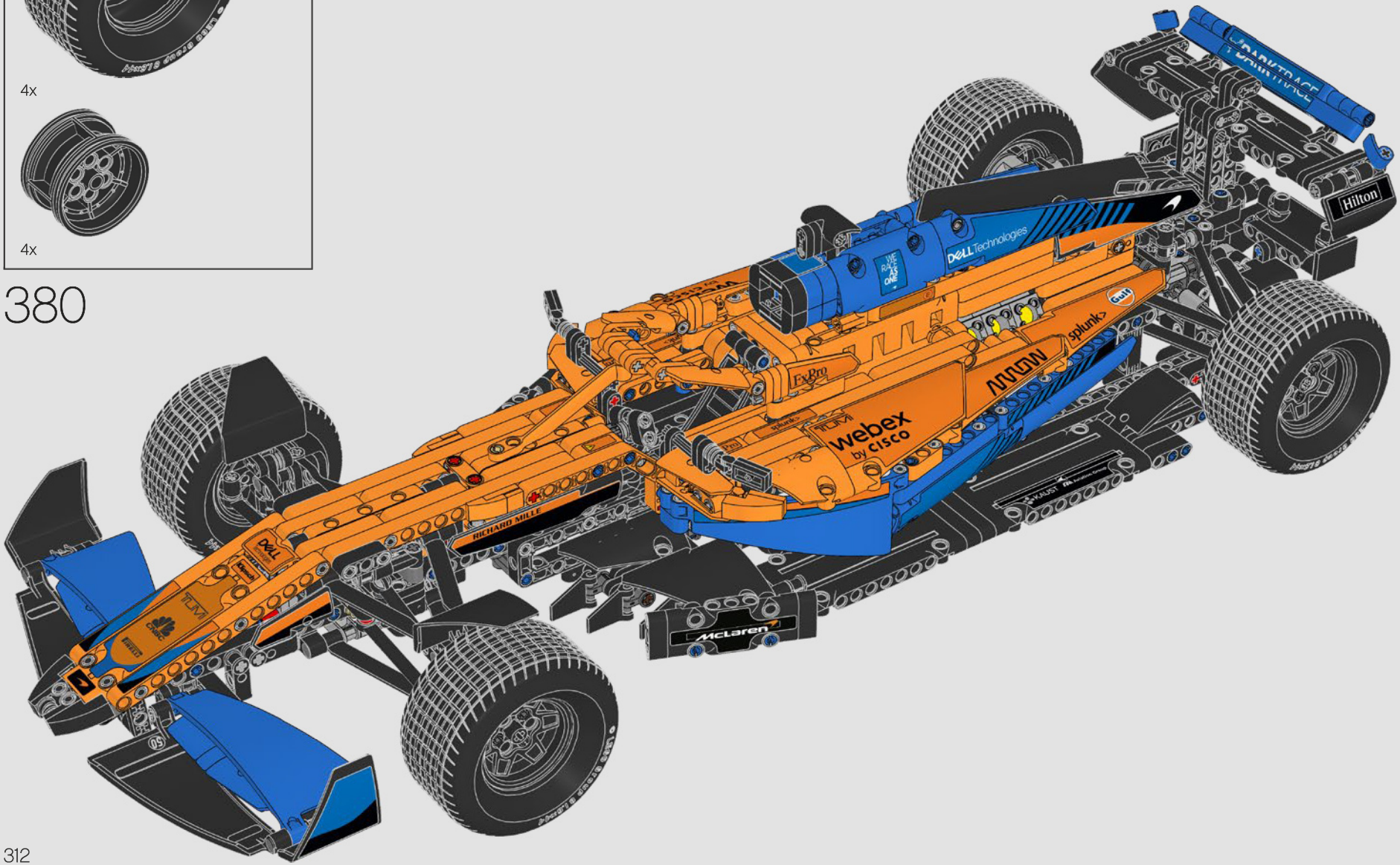
Hilton
DELL Technologies
splunk>
webex
by cisco
RICHARD MILLE
McLaren

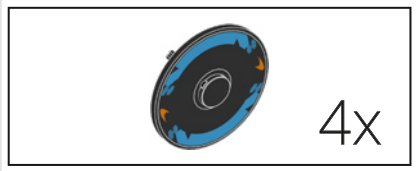

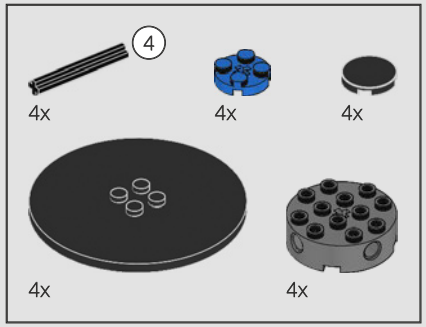

381

1

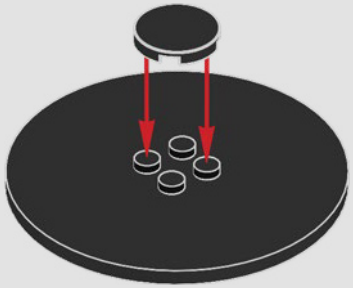

2

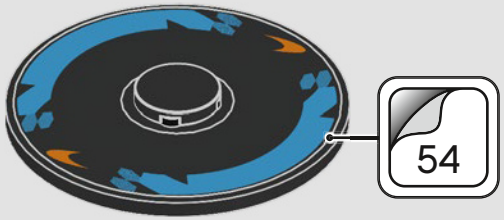

3

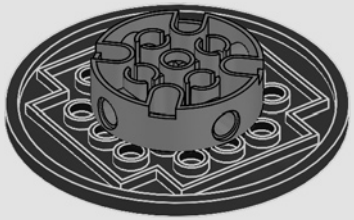

4

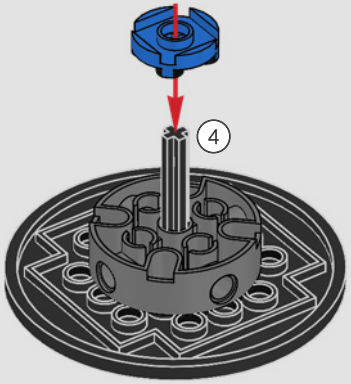

4x

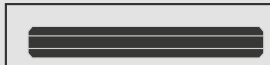

4 1:1

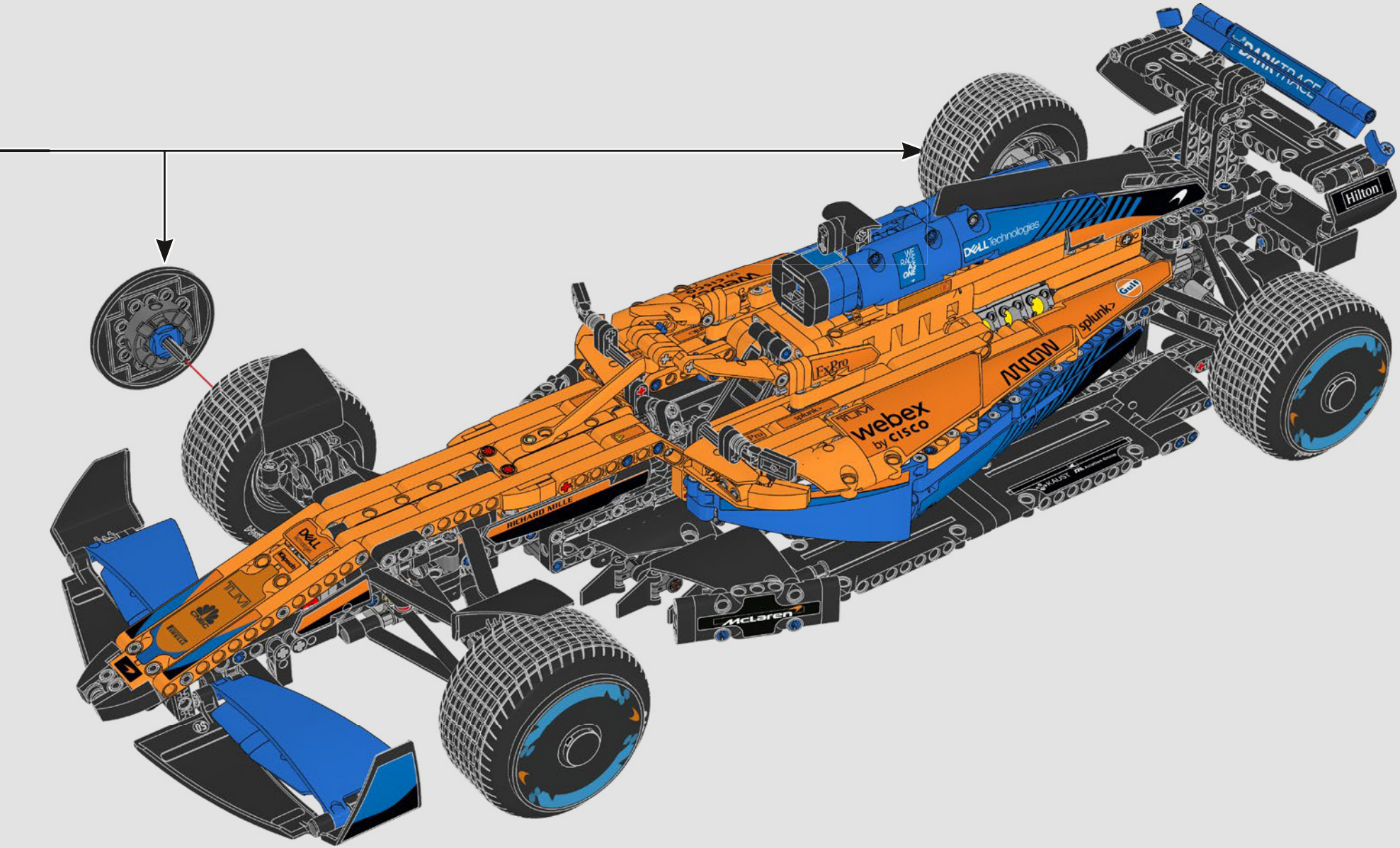
Hilton
DELL Technologies
splunk>
webex
by cisco
RICHARD MILLE
McLaren

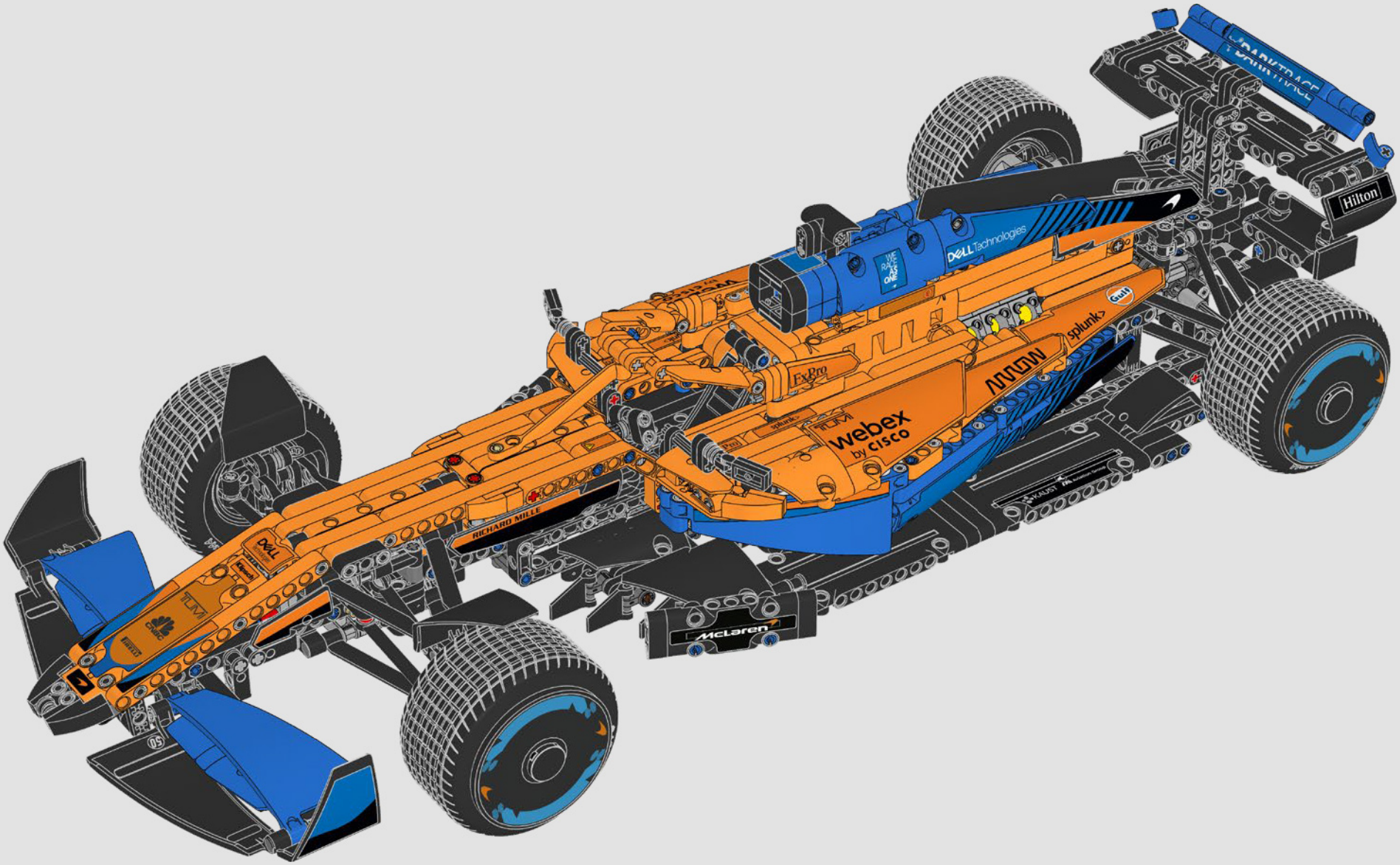
Hilton
DELL Technologies
splunk>
webex
by cisco
RICHARD MILLE
McLaren

FEEDBACK AND WIN

FEEDBACK
AND **WIN**

Your feedback will help shape the future development of this product series.

Please visit:

FEEDBACK
UND **GEWINNEN**

Dein Feedback trägt zur Weiterentwicklung dieser Produktreihe bei.

Geh auf:

COMMENTEZ
ET **GAGNEZ**

Vos commentaires nous aideront à concevoir les futurs produits de cette gamme.

Rendez-vous sur :

COMENTA
Y **GANA**

Tu opinión nos ayudará a dar forma al desarrollo de esta serie de productos en el futuro.

Visita:

反馈有奖

您的反馈将有助于我们在今后改进本系列产品。

请访问：

LEGO.com/productfeedback

By completing, you will automatically enter a drawing to win a LEGO® set.

Terms & Conditions apply.

Durch Ausfüllen nimmst du automatisch an der Verlosung eines LEGO® Preises teil.

Es gelten die Teilnahmebedingungen.

En envoyant vos commentaires, vous serez automatiquement inscrit(e) à un tirage au sort qui vous permettra de remporter un prix LEGO®.

Offre soumise à conditions.

Al contestar, participarás automáticamente en el sorteo y podrás ganar un set LEGO®.

Sujeto a Términos y Condiciones.

完成我们的反馈调查，即可自动进入抽奖环节，赢取乐高®套装。

适用《条款和条件》。

LEGO and the LEGO logo are trademarks of the LEGO Group. ©2022 The LEGO Group.
Manufactured under license from McLaren Racing Limited. McLaren is a trademark of McLaren Racing Limited.

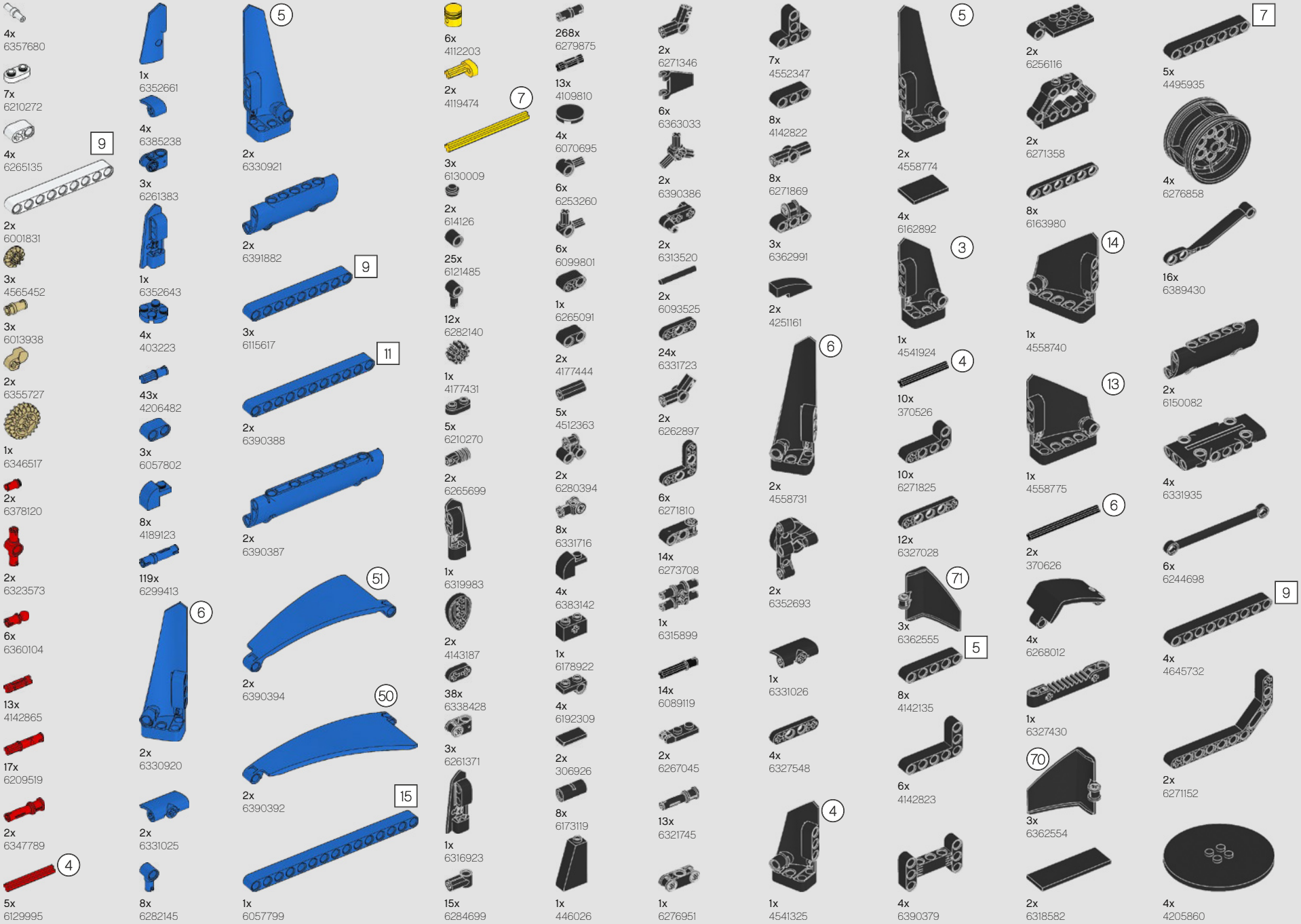
4x 6357680
7x 6210272
4x 6265135
9
2x 6001831
3x 4565452
3x 6013938
2x 6355727
1x 6346517
2x 6378120
2x 6323573
6x 6360104
13x 4142865
17x 6209519
2x 6347789
4
5x 6129995
1x 6352661
4x 6385238
3x 6261383
1x 6352643
4x 403223
43x 4206482
3x 6057802
8x 4189123
119x 6299413
6
2x 6330920
2x 6331025
8x 6282145
5
2x 6330921
2x 6391882
9
3x 6115617
11
2x 6390388
2x 6390387
51
2x 6390394
50
2x 6390392
15
1x 6057799
6x 4112203
2x 4119474
7
3x 6130009
2x 614126
25x 6121485
12x 6282140
1x 4177431
5x 6210270
2x 6265699
1x 6319983
2x 4143187
38x 6338428
3x 6261371
1x 6316923
15x 6284699
268x 6279875
13x 4109810
4x 6070695
6x 6253260
6x 6099801
1x 6265091
2x 4177444
5x 4512363
2x 6280394
8x 6331716
4x 6383142
1x 6178922
4x 6192309
2x 306926
8x 6173119
1x 446026
2x 6271346
6x 6363033
2x 6390386
2x 6313520
2x 6093525
24x 6331723
2x 6262897
6x 6271810
14x 6273708
1x 6315899
14x 6089119
2x 6267045
13x 6321745
1x 6276951
7x 4552347
8x 4142822
8x 6271869
3x 6362991
2x 4251161
6
2x 4558731
2x 6352693
1x 6331026
4x 6327548
4
1x 4541325
5
2x 4558774
4x 6162892
3
1x 4541924
4
10x 370526
10x 6271825
12x 6327028
71
3x 6362555
5
8x 4142135
6x 4142823
4x 6390379
2x 6256116
2x 6271358
8x 6163980
14
1x 4558740
13
1x 4558775
6
2x 370626
4x 6268012
1x 6327430
70
3x 6362554
2x 6318582
7
5x 4495935
4x 6276858
16x 6389430
2x 6150082
4x 6331935
6x 6244698
9
4x 4645732
2x 6271152
4x 4205860

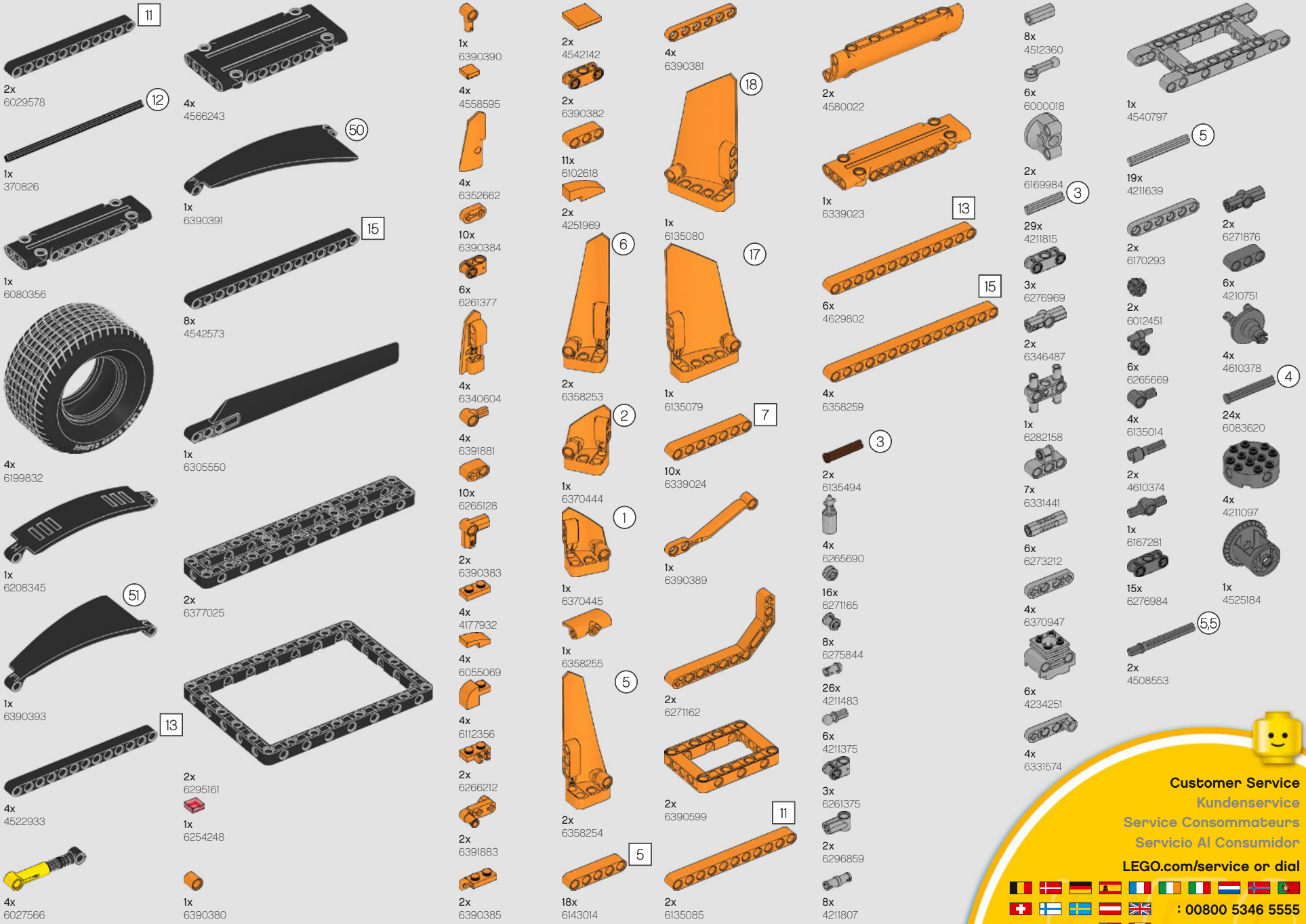
11
2x 6029578
12
1x 370826
1x 6080356
4x 6199832
1x 6208345
51
1x 6390393
13
4x 4522933
4x 6027566
4x 4566243
50
1x 6390391
15
8x 4542573
1x 6305550
2x 6377025
2x 6295161
1x 6254248
1x 6390380
1x 6390390
4x 4558595
4x 6352662
10x 6390384
6x 6261377
4x 6340604
4x 6391881
10x 6265128
2x 6390383
4x 4177932
4x 6055069
4x 6112356
2x 6266212
2x 6391883
2x 6390385
2x 4542142
2x 6390382
11x 6102618
2x 4251969
6
2x 6358253
2
1x 6370444
1
1x 6370445
1x 6358255
5
2x 6358254
5
18x 6143014
4x 6390381
18
1x 6135080
17
1x 6135079
7
10x 6339024
1x 6390389
2x 6271162
2x 6390599
11
2x 6135085
2x 4580022
1x 6339023
13
6x 4629802
15
4x 6358259
3
2x 6135494
4x 6265690
16x 6271165
8x 6275844
26x 4211483
6x 4211375
3x 6261375
2x 6296859
8x 4211807
8x 4512360
6x 6000018
2x 6169984
3
29x 4211815
3x 6276969
2x 6346487
1x 6282158
7x 6331441
6x 6273212
4x 6370947
6x 4234251
4x 6331574
1x 4540797
5
19x 4211639
2x 6170293
2x 6012451
6x 6265669
4x 6135014
2x 4610374
1x 6167281
15x 6276984
5,5
2x 4508553
2x 6271876
6x 4210751
4x 4610378
4
24x 6083620
4x 4211097
1x 4525184
Customer Service
Kundenservice
Service Consommateurs
Servicio Al Consumidor
LEGO.com/service or dial
: 00800 5346 5555
: 1-800-422-5346

McLaren

FORMULA 1 TEAM

6427983