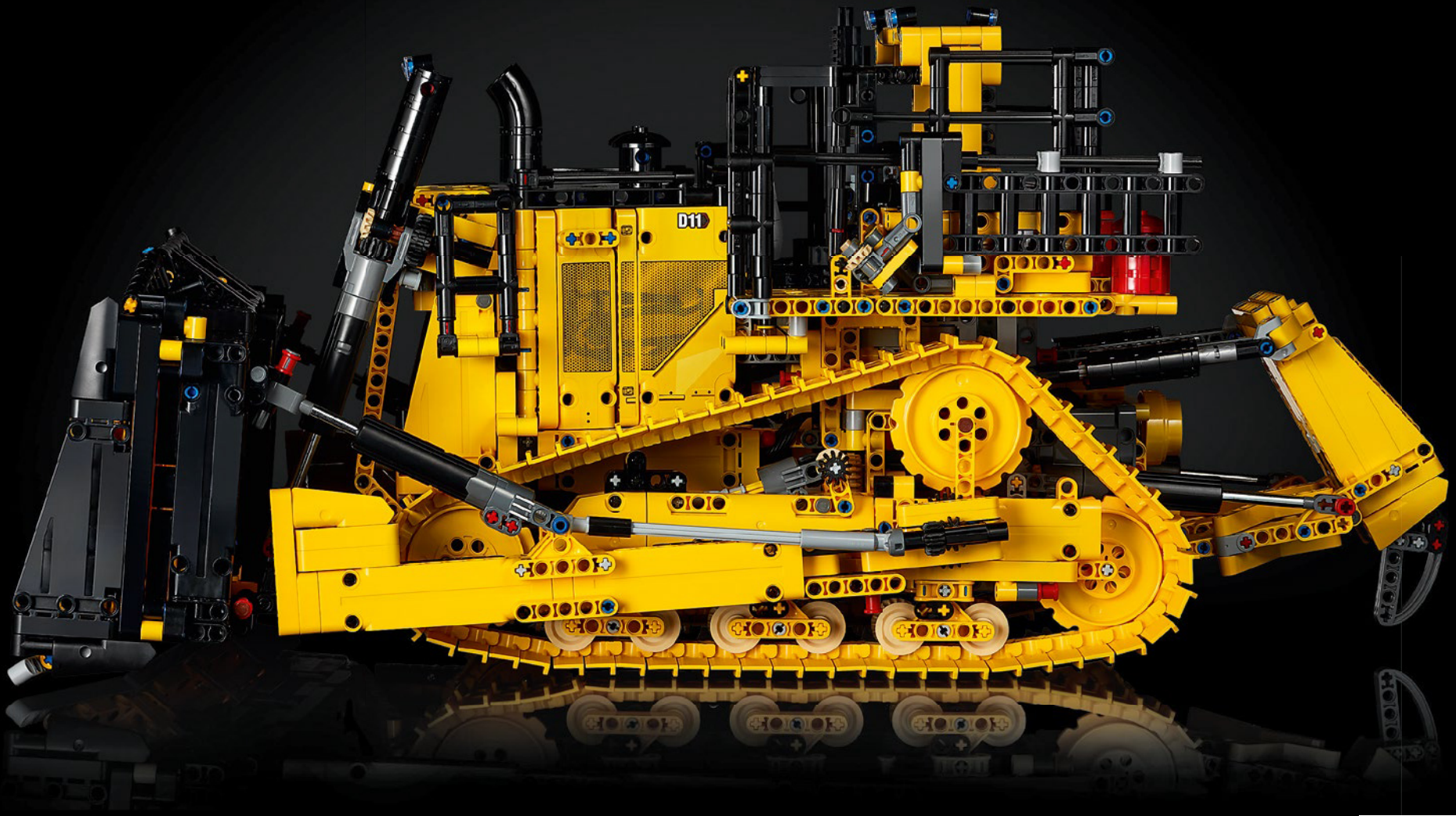

1

Booklet available in English on
Heft in deutscher Sprache erhältlich auf
Livret disponible en français sur
Libretto disponibile in Italiano su
Folleto disponible en español en
如需中文版手册，请访问

D11

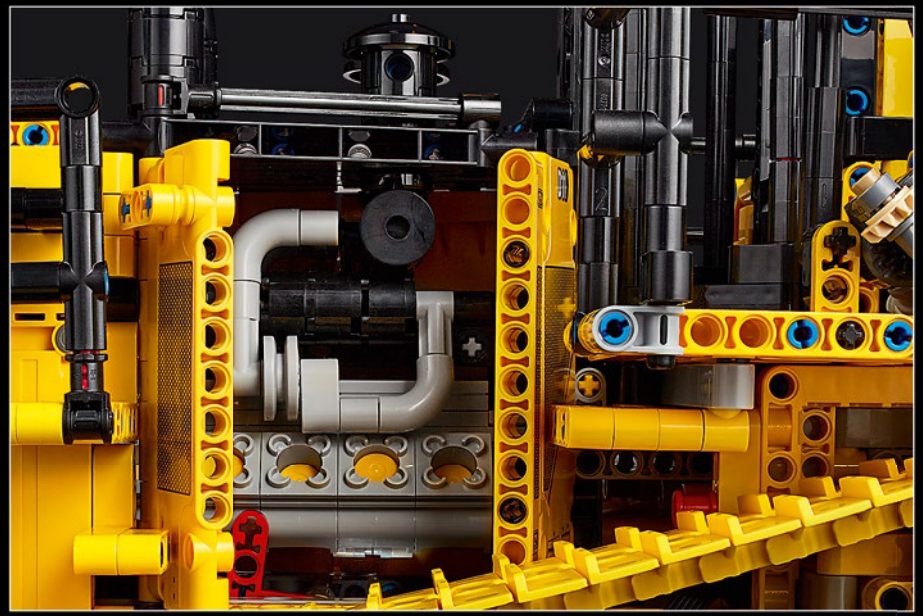

CAT

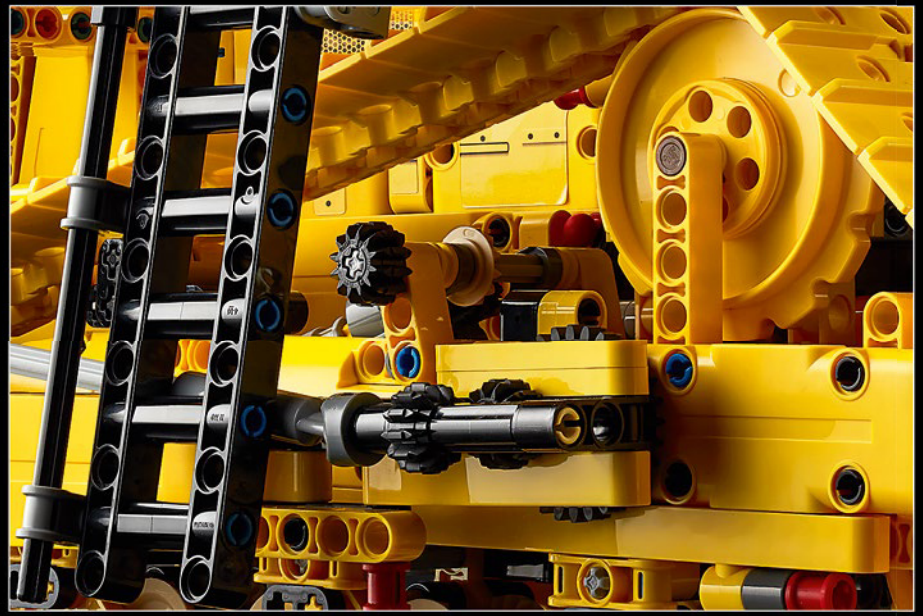

MASTER MOVING MACHINE

If you want to move lots of anything, then the best way to do it is with a Cat® Dozer. From large to smaller machines and for carrying out all types of tasks, there are more Cat® Dozers at work in the world than any other brand. The D11 is the biggest and most powerful dozer in the Cat® range and the perfect challenge to recreate in LEGO® Technic elements.

MAKING THE BEST EVEN BETTER

The D11 isn't only the largest and most powerful dozer in the Cat® range, it's also the most advanced. Innovative features such as a machine protection strategy, as well as a machine guidance system, ensure higher productivity and the ultimate performance. The latest technology provides the operator with full command of the dozer for safe and efficient operation. Likewise, the LEGO® Technic version of the Cat® Dozer is much more than just a static model.
CONTROL+ adds a whole new level of realism with lifelike driving and operating functions, accurate sound effects, authentic controls and real-time data feedback.

2608
2608
CAT
D11
CAT

MARKUS KOSSMANN
Design Master, LEGO® Technic

BUILD FOR REAL

With over 20 years' experience of creating large-scale, complex construction vehicles in LEGO® Technic elements, Markus Kossmann was the perfect designer for this set. As always, the goal was to re-create as many of the features and functions from the real dozer as possible. This can be seen in the many small details and also in the way the model replicates the working movements of the real D11 using the CONTROL+ app.

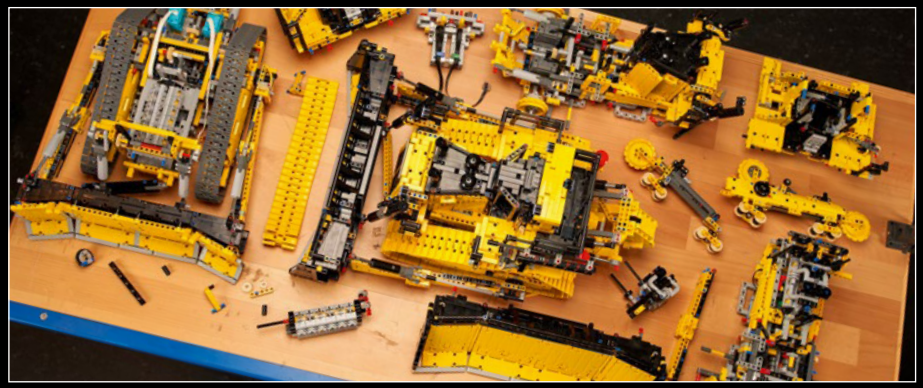

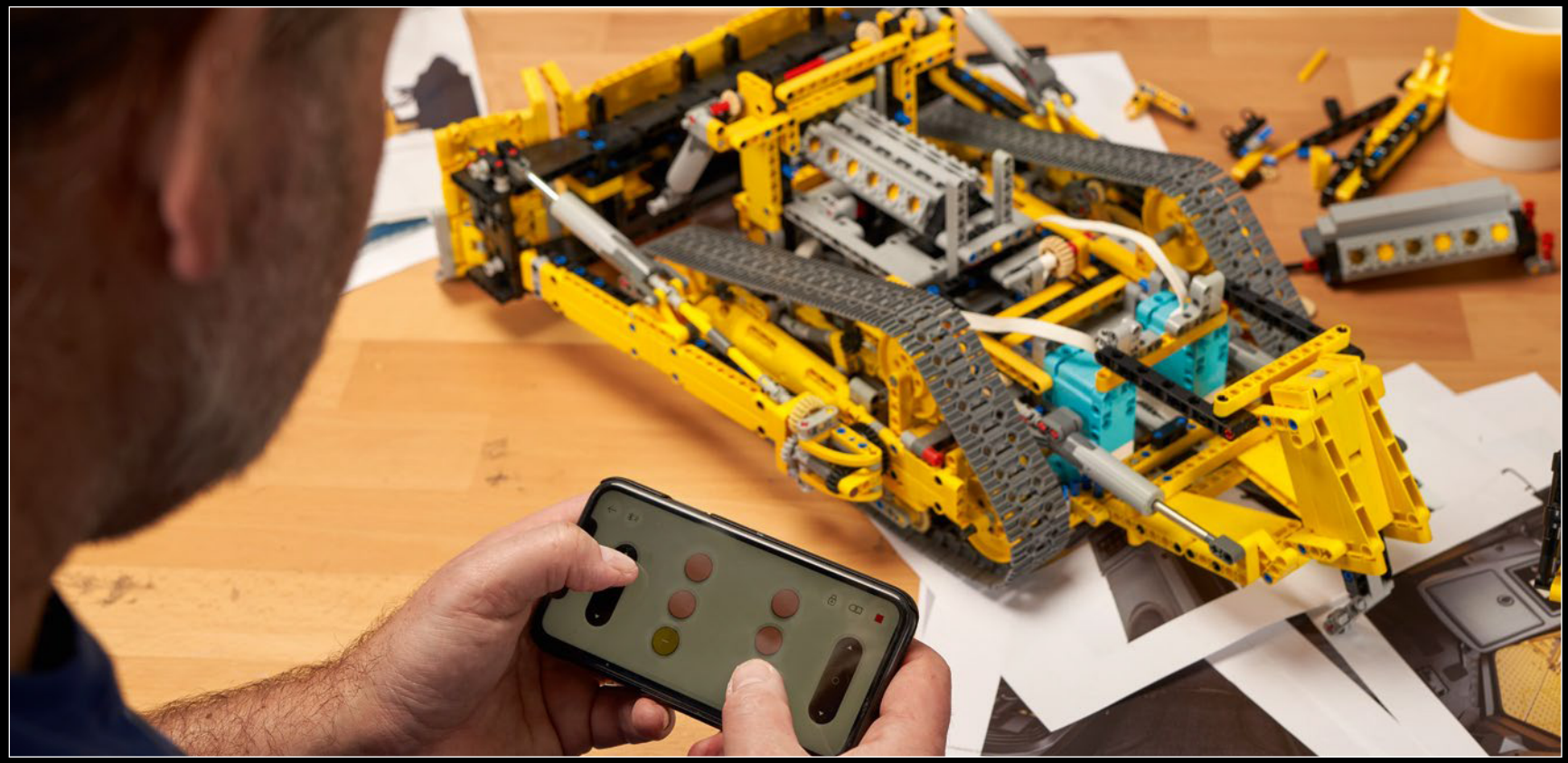

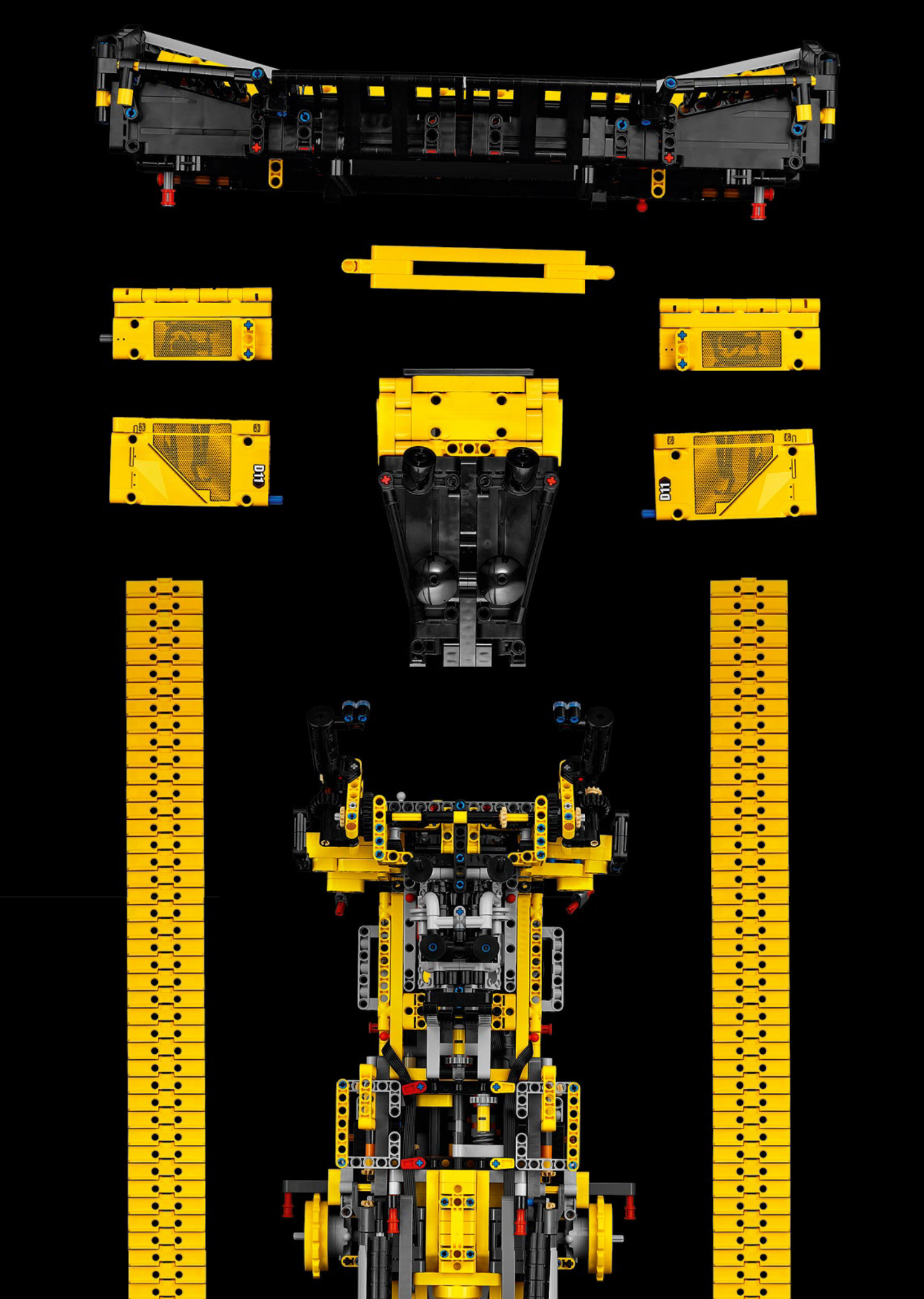

"YOU ASSEMBLE THIS MODEL EXACTLY LIKE THE REAL D11 DOZER."

Markus Kossmann, Design Master, LEGO® Technic

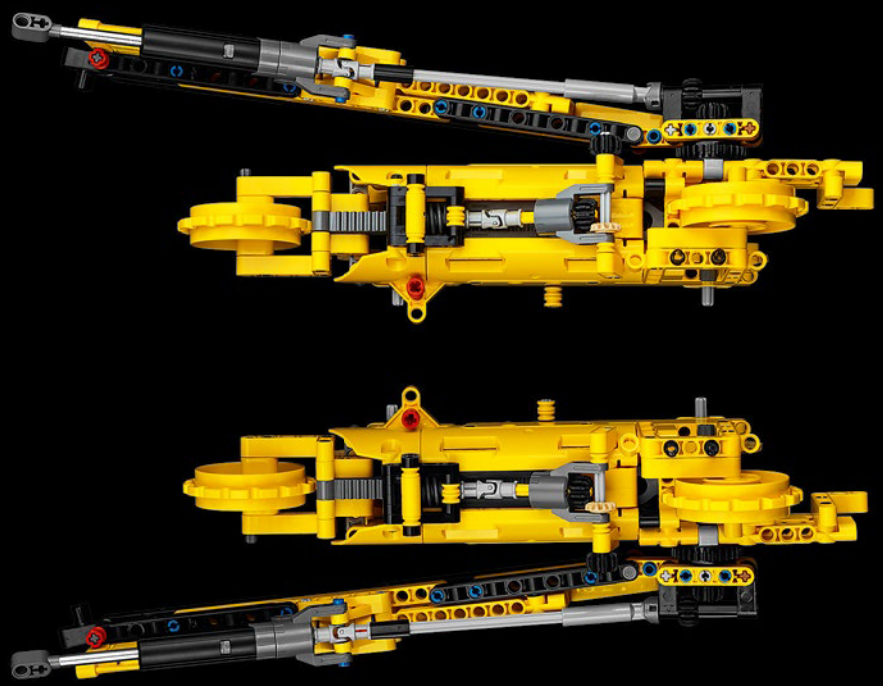

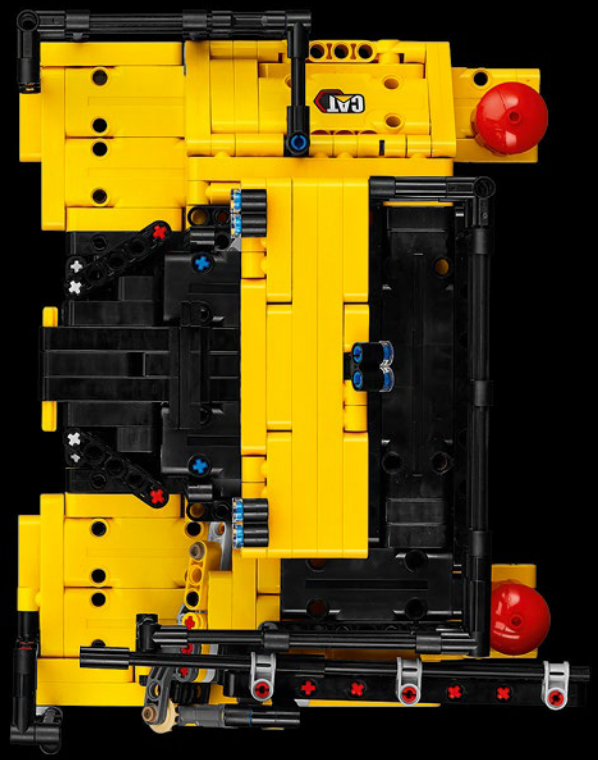

The full-size D11 is too big to be transported in one piece, so it's built in modules and assembled on site. The LEGO Technic version of the dozer authentically replicates this entire process.

2608
D11
CAT

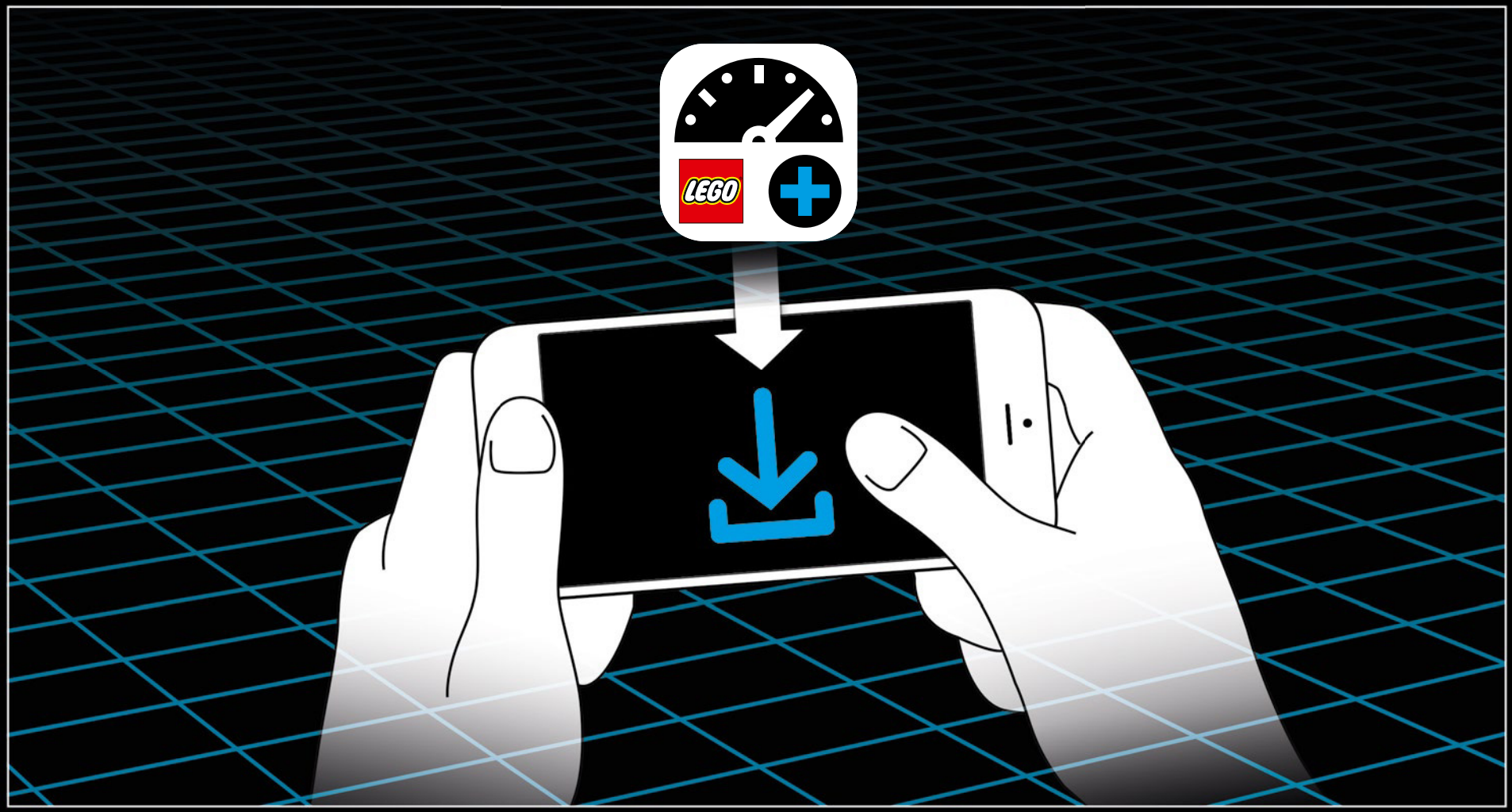

LEGO® TECHNIC™ CONTROL+

Check for compatibility and FAQ
Kompatibilitätsprüfung und häufig gestellte Fragen
Vérifier la compatibilité et FAQ

Controlla la compatibilità e le FAQ
Información sobre compatibilidad y P+F
Verificar a compatibilidade e FAQ

Ellenőrizd a kompatibilitást és a GYIK-et
Informācija par saderību un bieži uzdotie jautājumi
查看兼容性与常见问题

LEGO.com/devicecheck

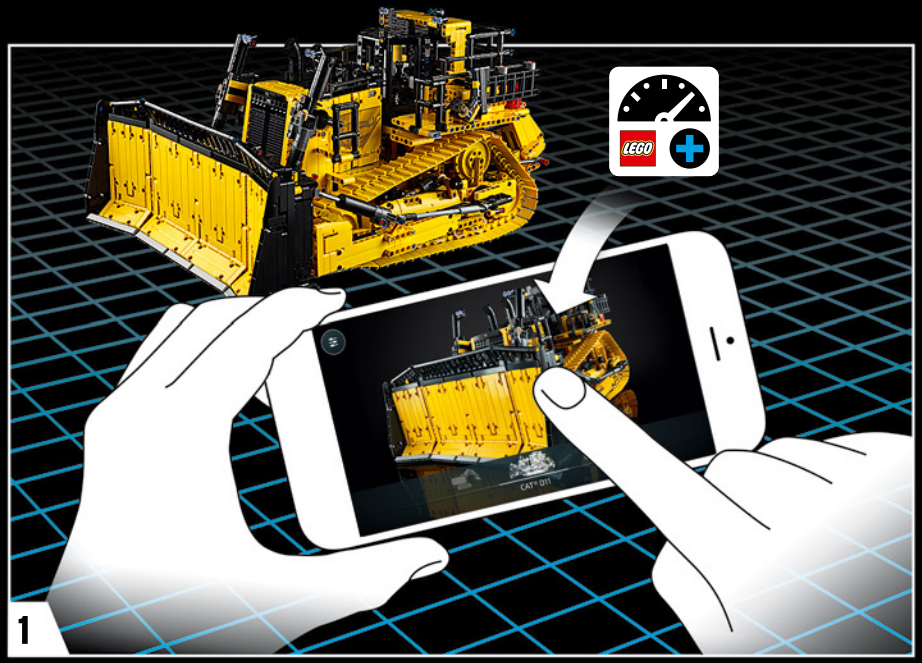
1

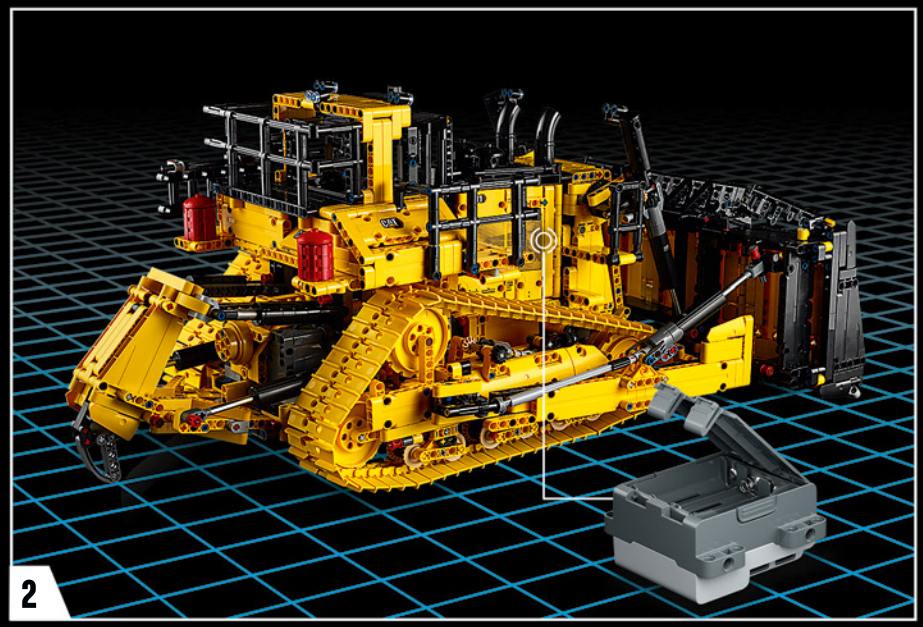
2

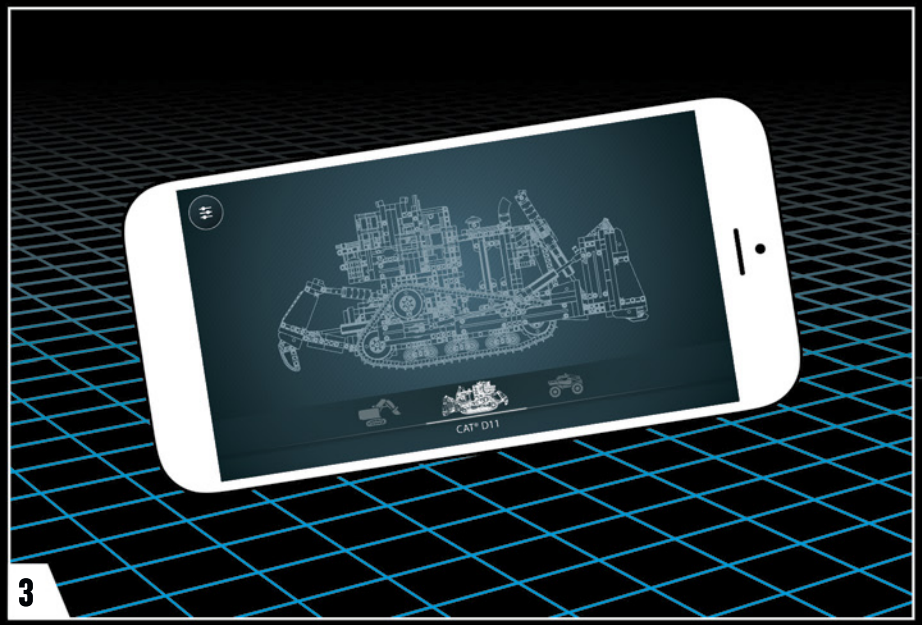
CAT® D11
3

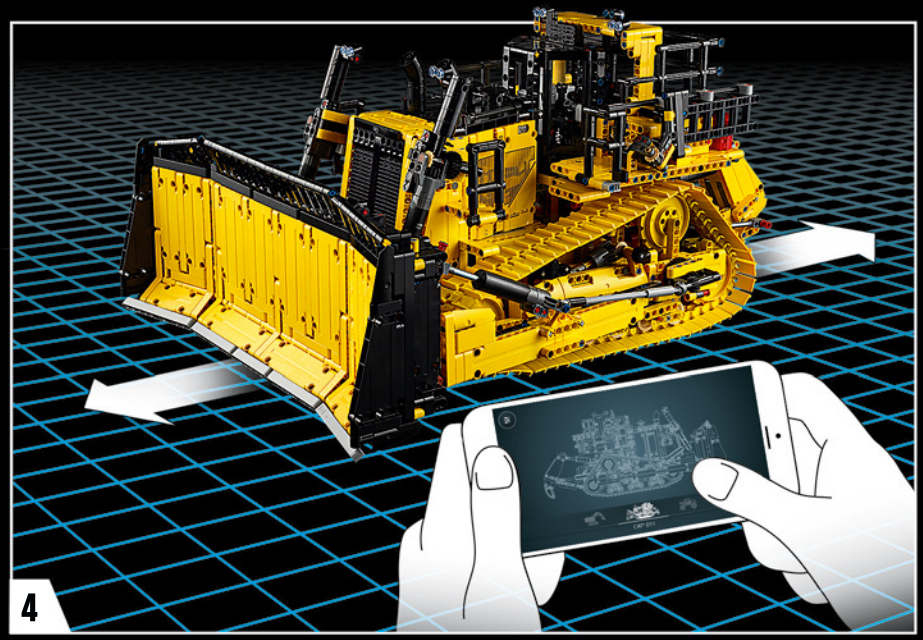
4

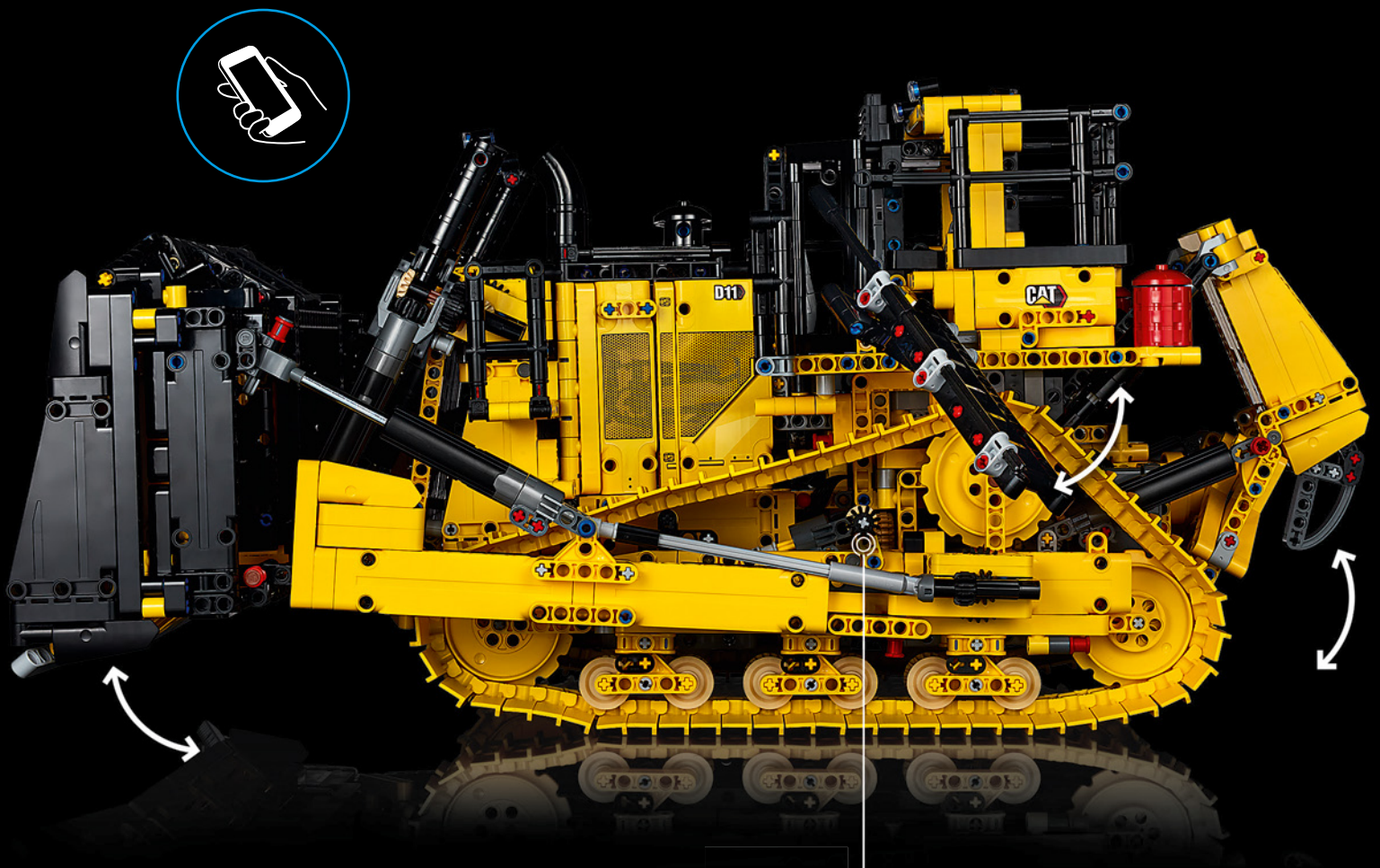

LEGO® TECHNIC™ CONTROL+

Check for compatibility
Kompatibilität prüfen
Vérifier la compatibilité
Controlla la compatibilità
Comprueba tu compatibilidad
Verificar a compatibilidade
Ellenőrizd a kompatibilitást!
Pārbaudi saderību
检查兼容性

LEGO.com/devicecheck

MAIN CONTROL

ALTERNATIVE CONTROL

CHALLENGES & ACHIEVEMENTS

MAIN CONTROL	ALTERNATIVE CONTROL	CHALLENGES & ACHIEVEMENTS
HAUPTSTEUERUNG	ALTERNATIVE STEUERUNG	HERAUSFORDERUNGEN & ERFOLGE
COMMANDE PRINCIPALE	COMMANDE ALTERNATIVE	DÉFIS ET VICTOIRES
CONTROLLO PRINCIPALE	CONTROLLO ALTERNATIVO	SFIDE E SUCCESSI
CONTROL PRINCIPAL	CONTROL ALTERNATIVO	DESAFÍOS Y LOGROS
COMANDO PRINCIPAL	CONTROLO ALTERNATIVO	DESAFIOS E PROEZAS
FŐ VEZÉRLŐPANEL	ALTERNATÍV VEZÉRLÉS	KIHÍVÁSOK ÉS EREDMÉNYEK
GALVENĀ VADĪBA	ALTERNATĪVAS VADĪBAS IESPĒJAS	IZAICINĀJUMI UN SASNIEGUMI
主控制	交替控制	挑战 & 成绩

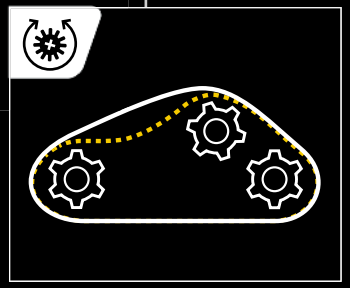

The app screens shown are subject to change.
Änderungen an den abgebildeten Ansichten der App vorbehalten.
Les écrans de l'application affichés sont susceptibles d'être modifiés.
Le schermate dell'app visualizzate potranno subire delle modifiche.
Las pantallas de la app que se muestran aquí están sujetas a cambios.
As imagens da app mostradas estão sujeitas a alteração.
Az ábrázolt alkalmazás-képernyők változhatnak.
Parādītie lietotņu ekrāni var tikt mainīti.
所显示的应用程序界面可能会发生变动。

LEGO® TECHNIC™ CONTROL+

The Bluetooth® word mark and logos are registered trademarks owned by Bluetooth SIG, Inc. and any use of such marks by LEGO System A/S is under license. Other trademarks and trade names are those of their respective owners.

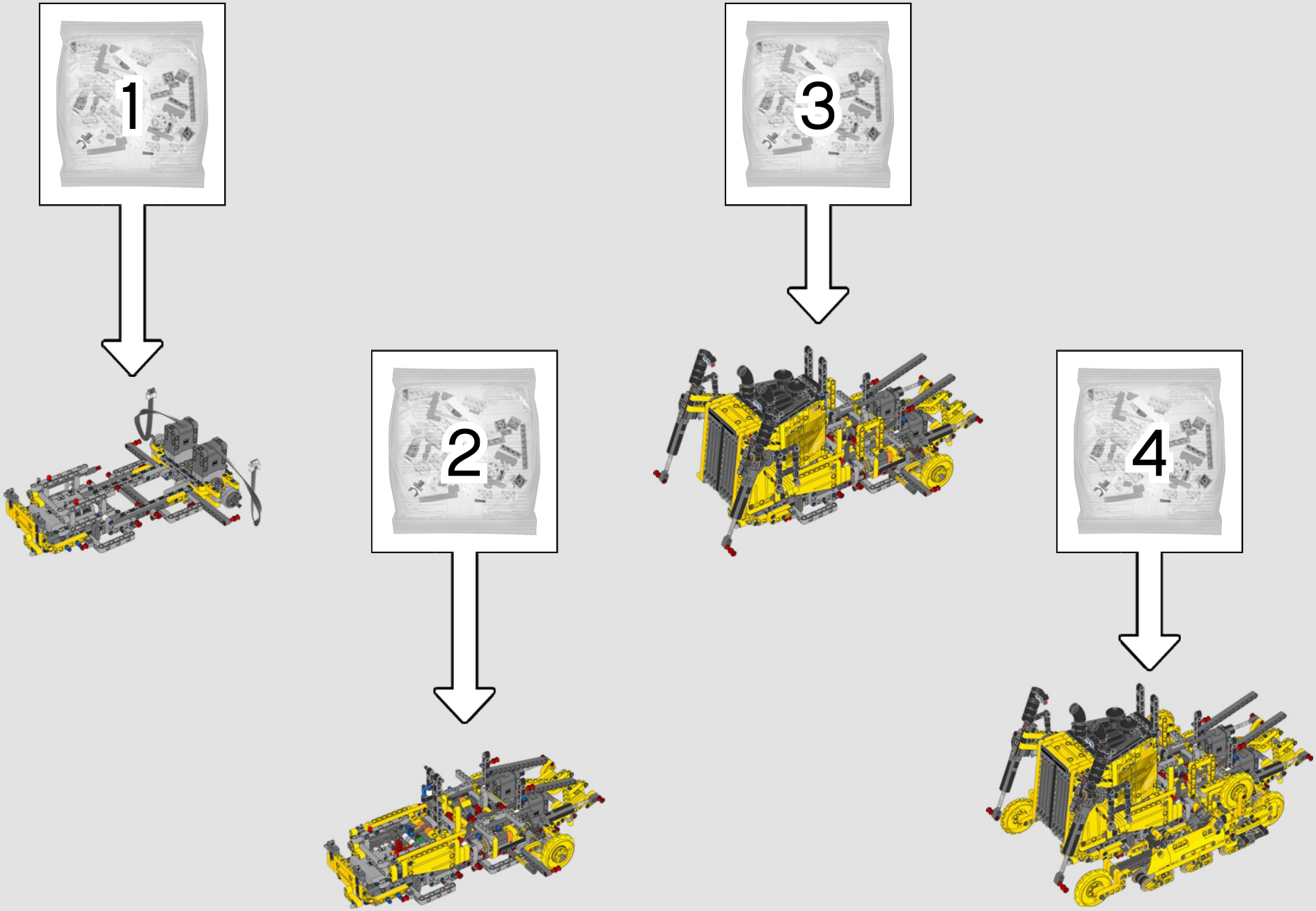
1
2
3
4

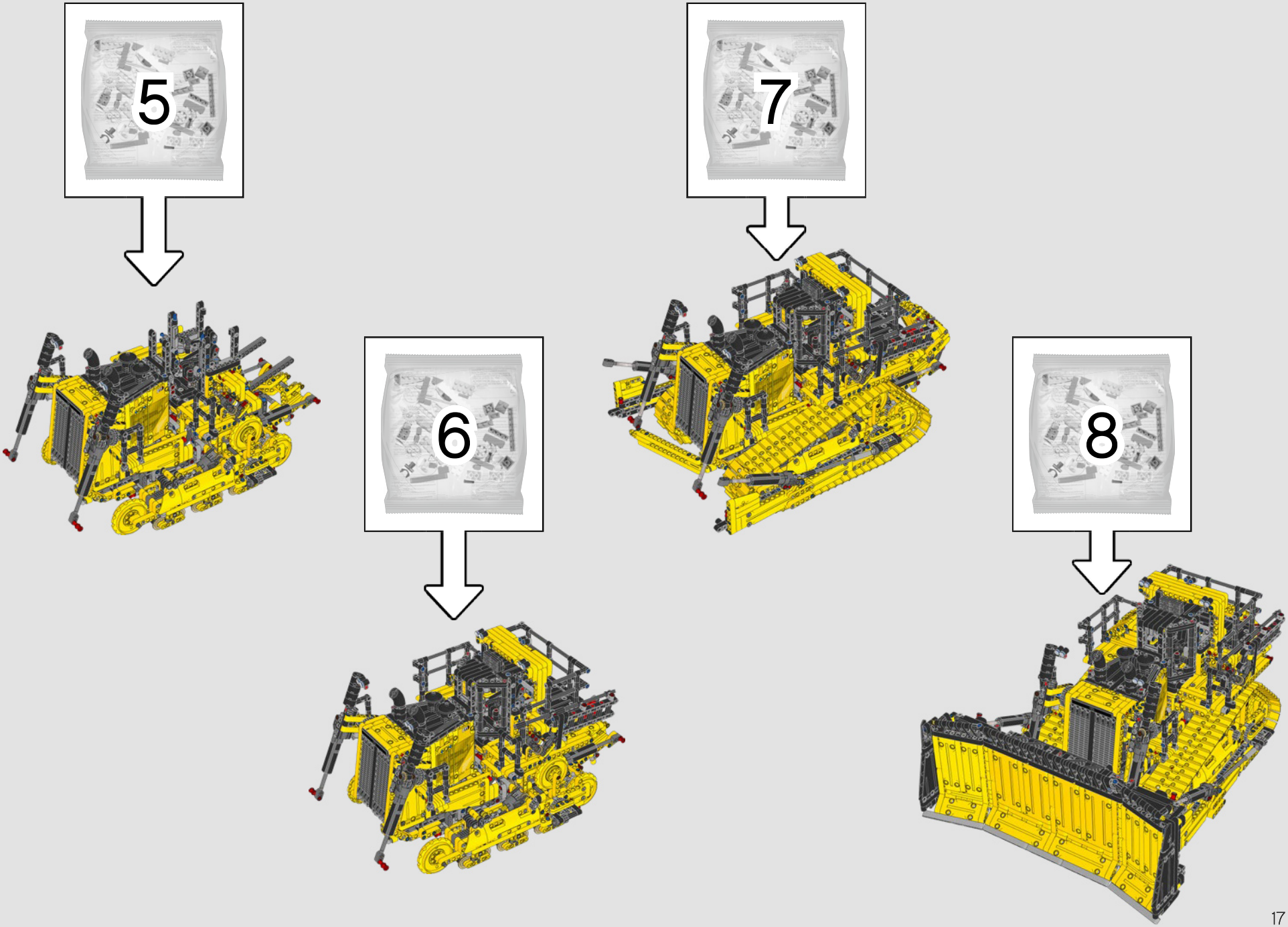
5
6
7
8

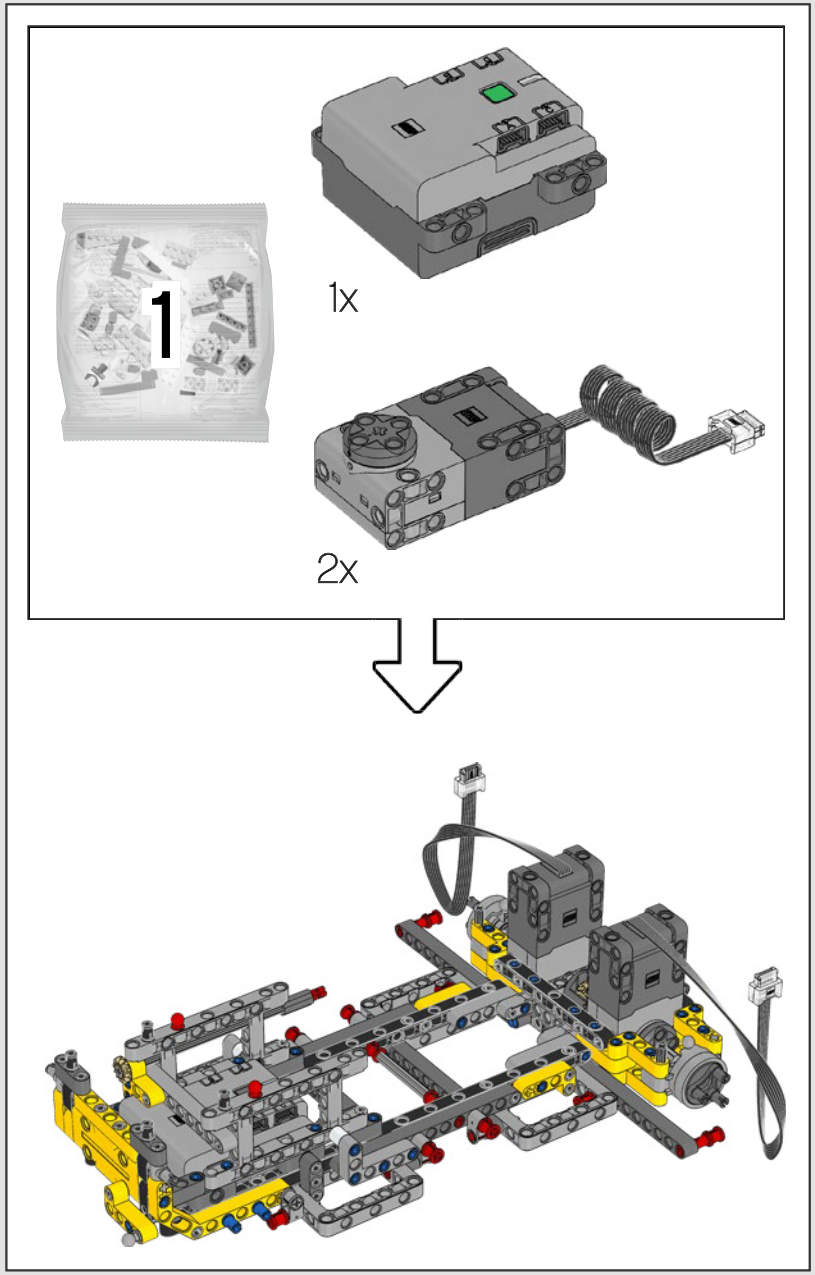
1
1x
2x

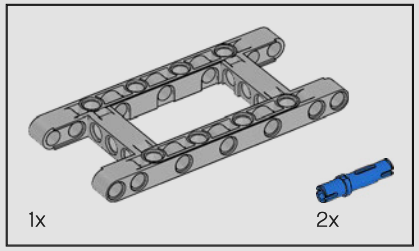

1

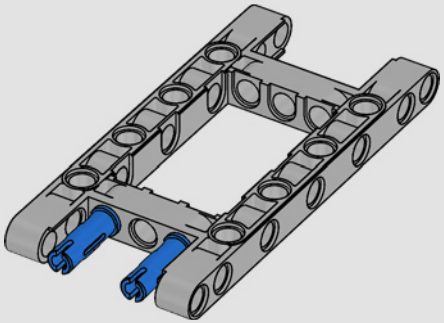

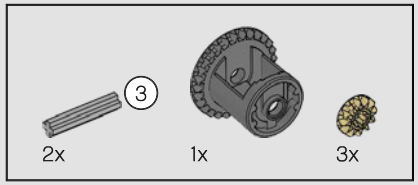

2

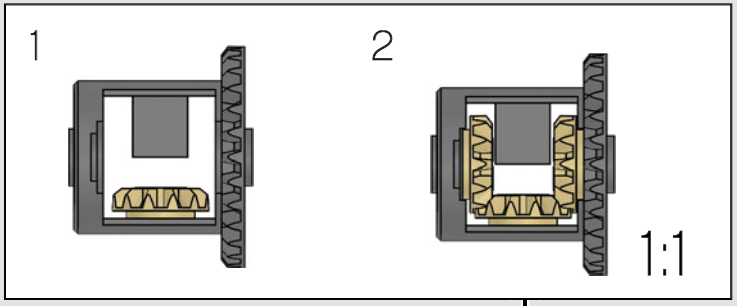

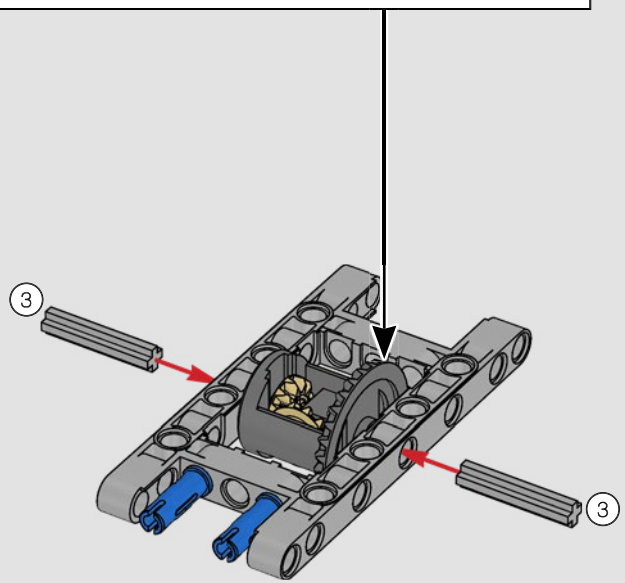

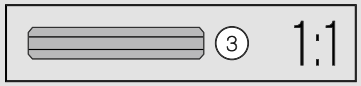

4x

3

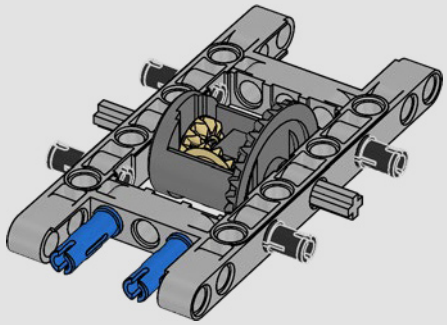

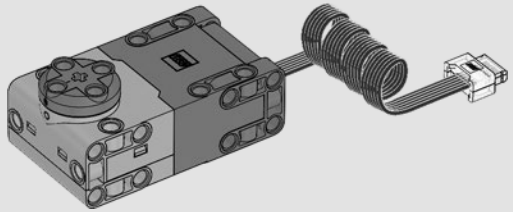

1x

4

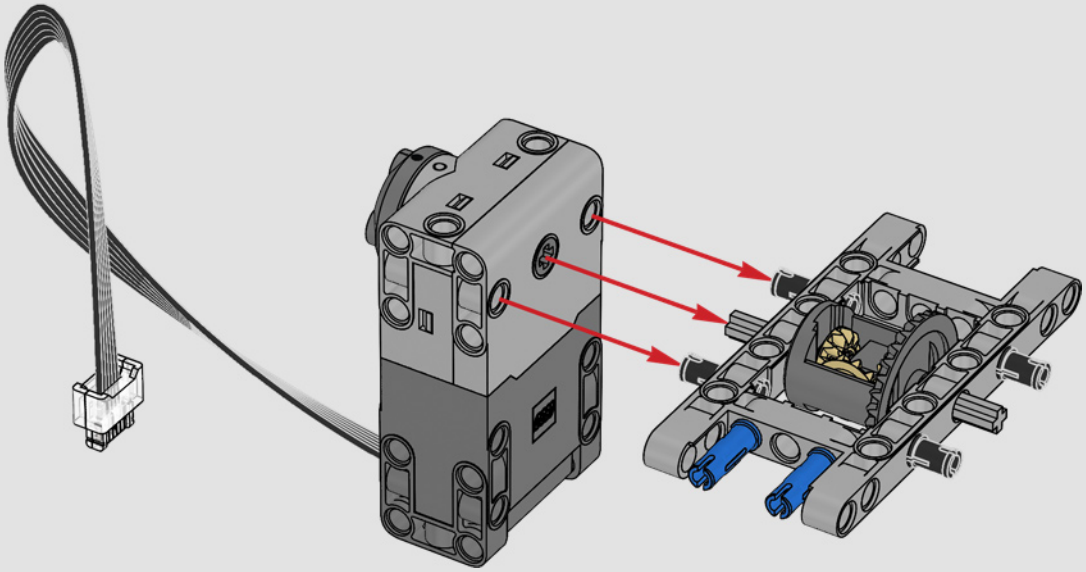

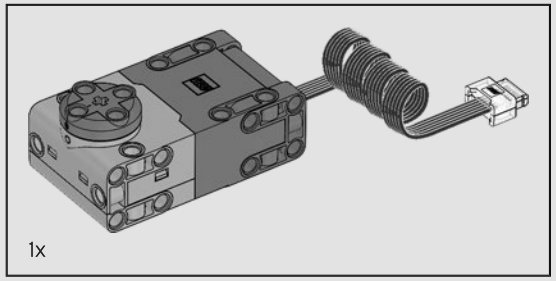

5

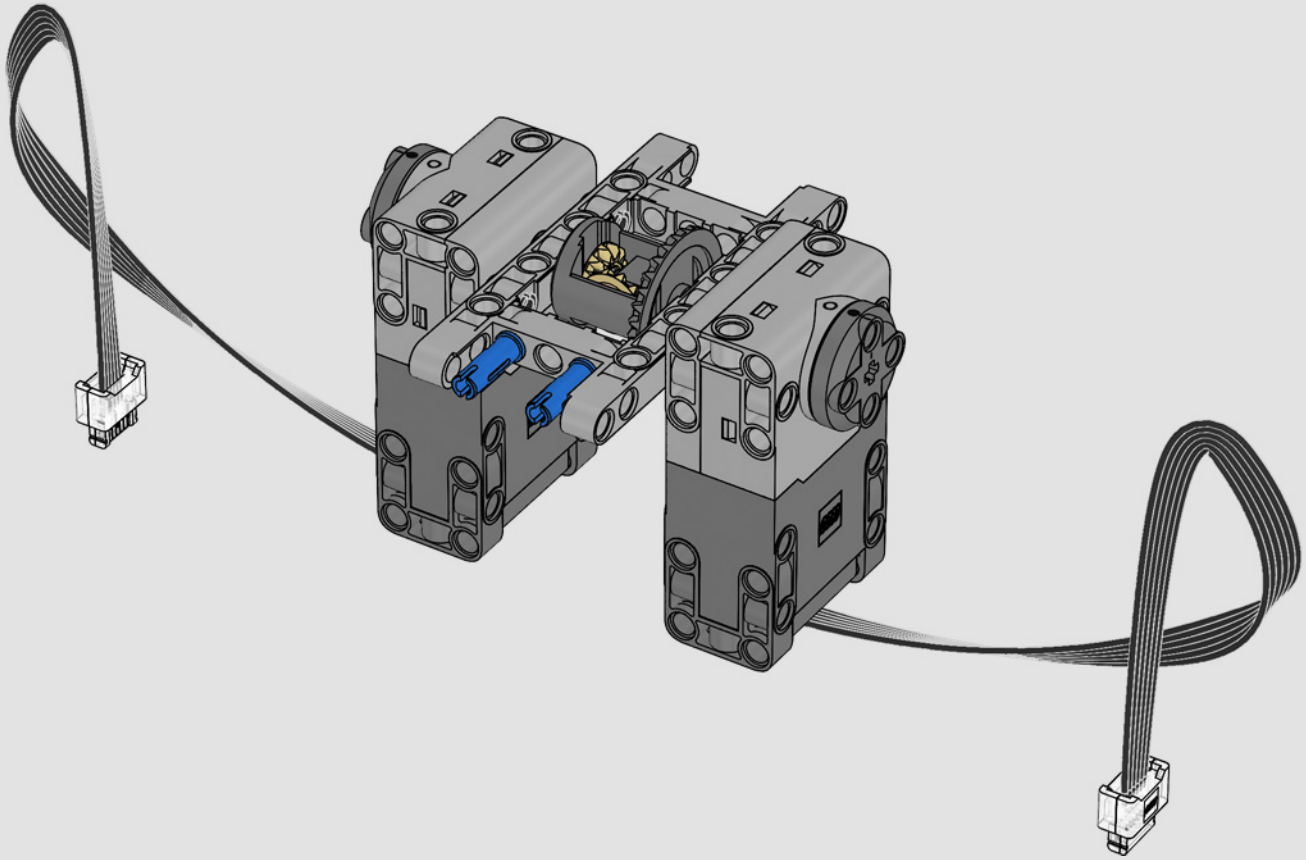

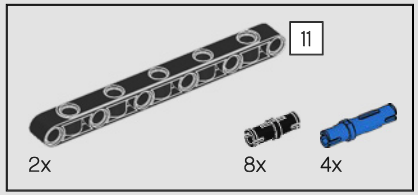

6

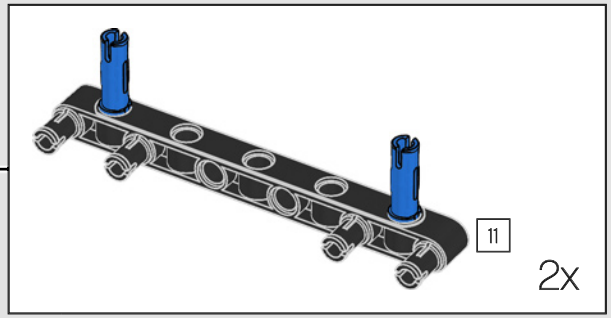

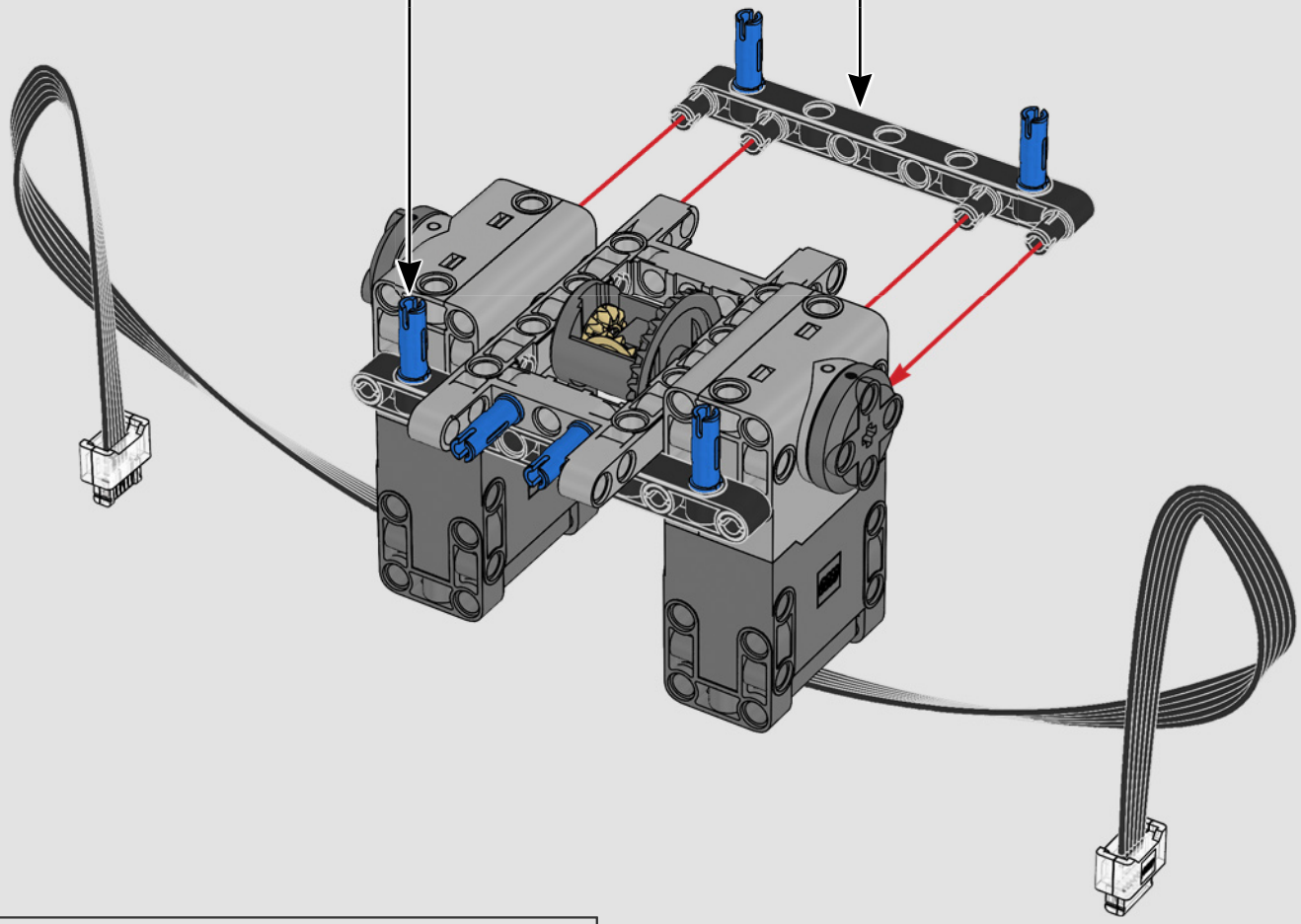

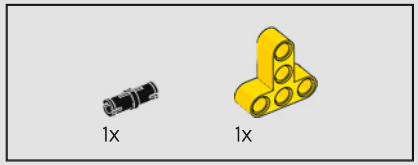

7

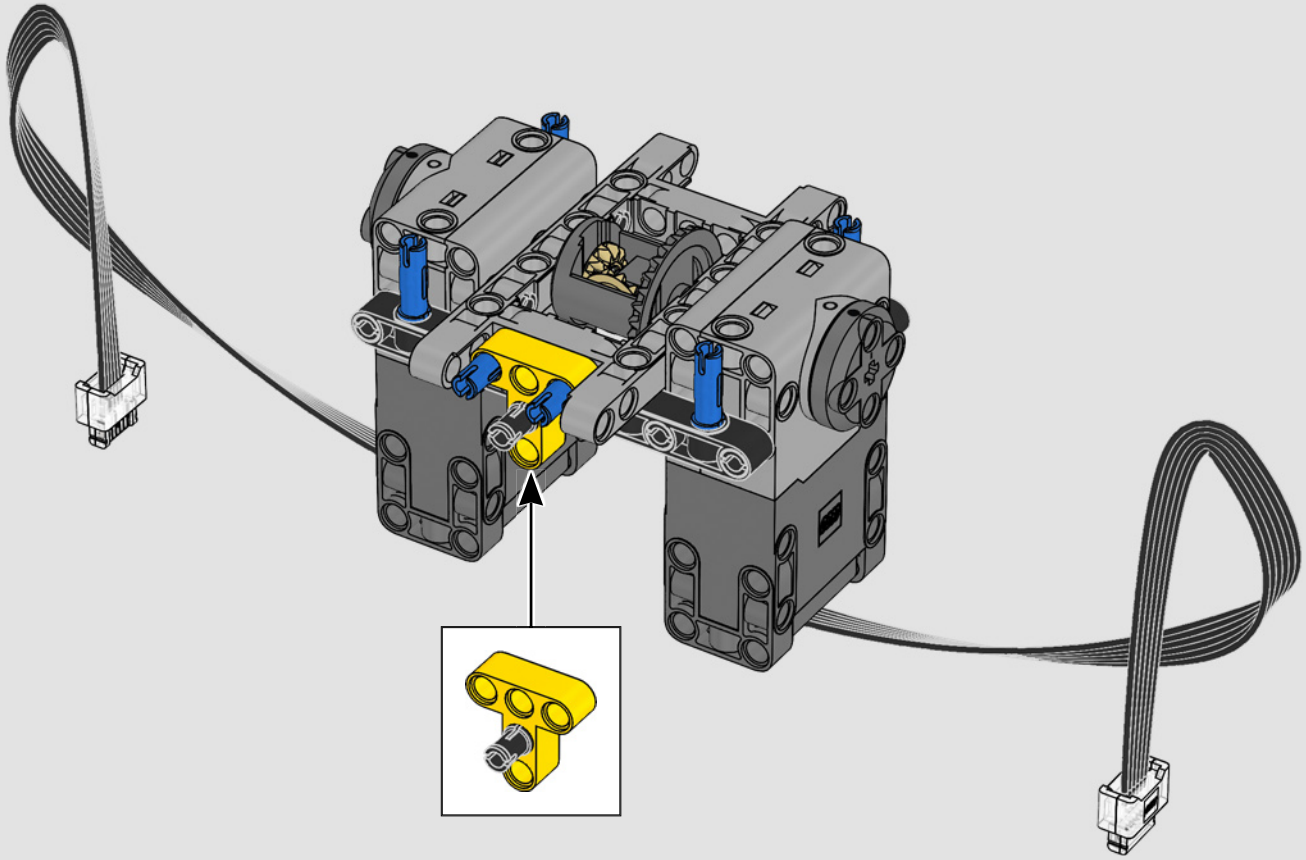

8

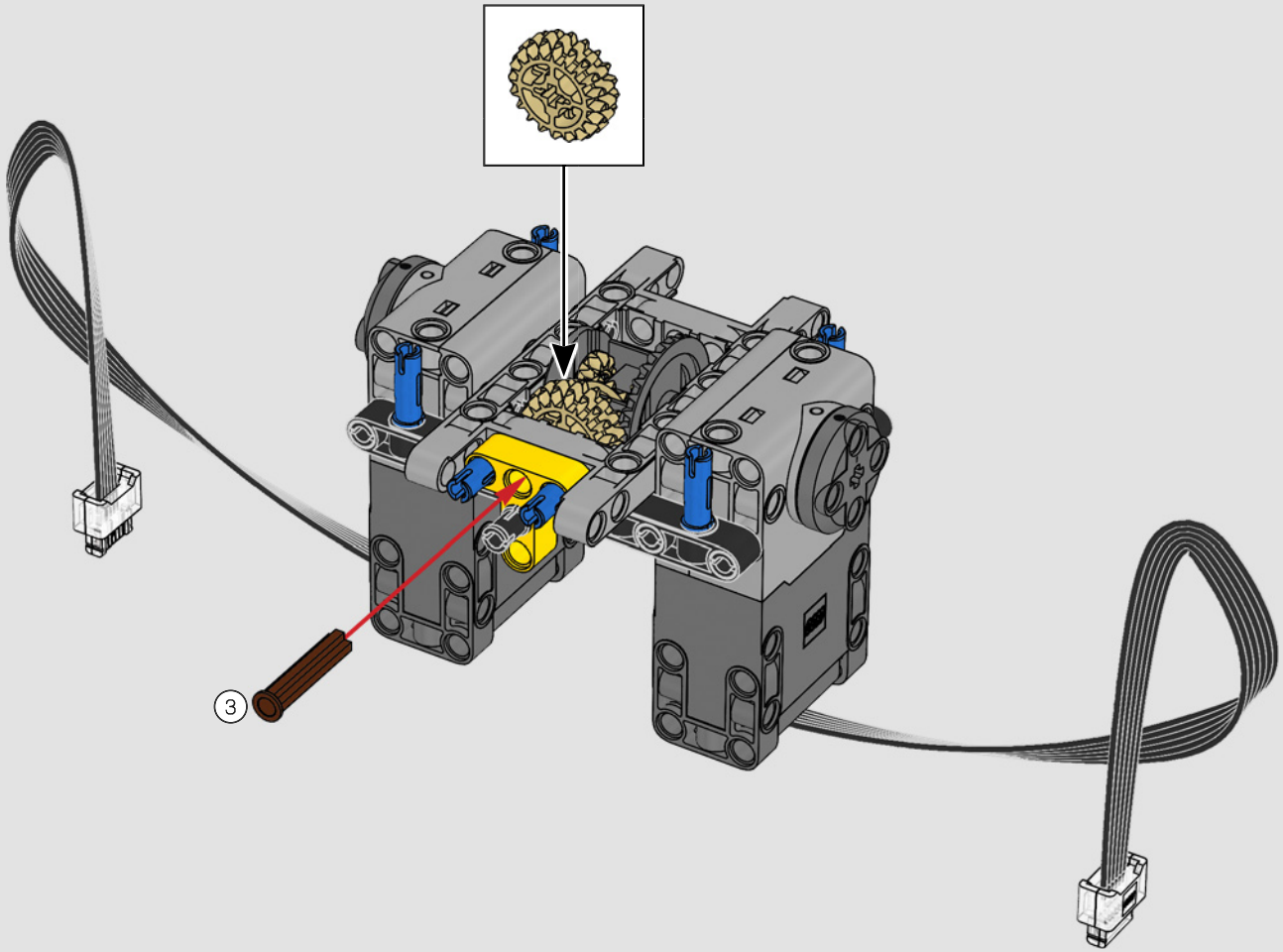

1:1

9

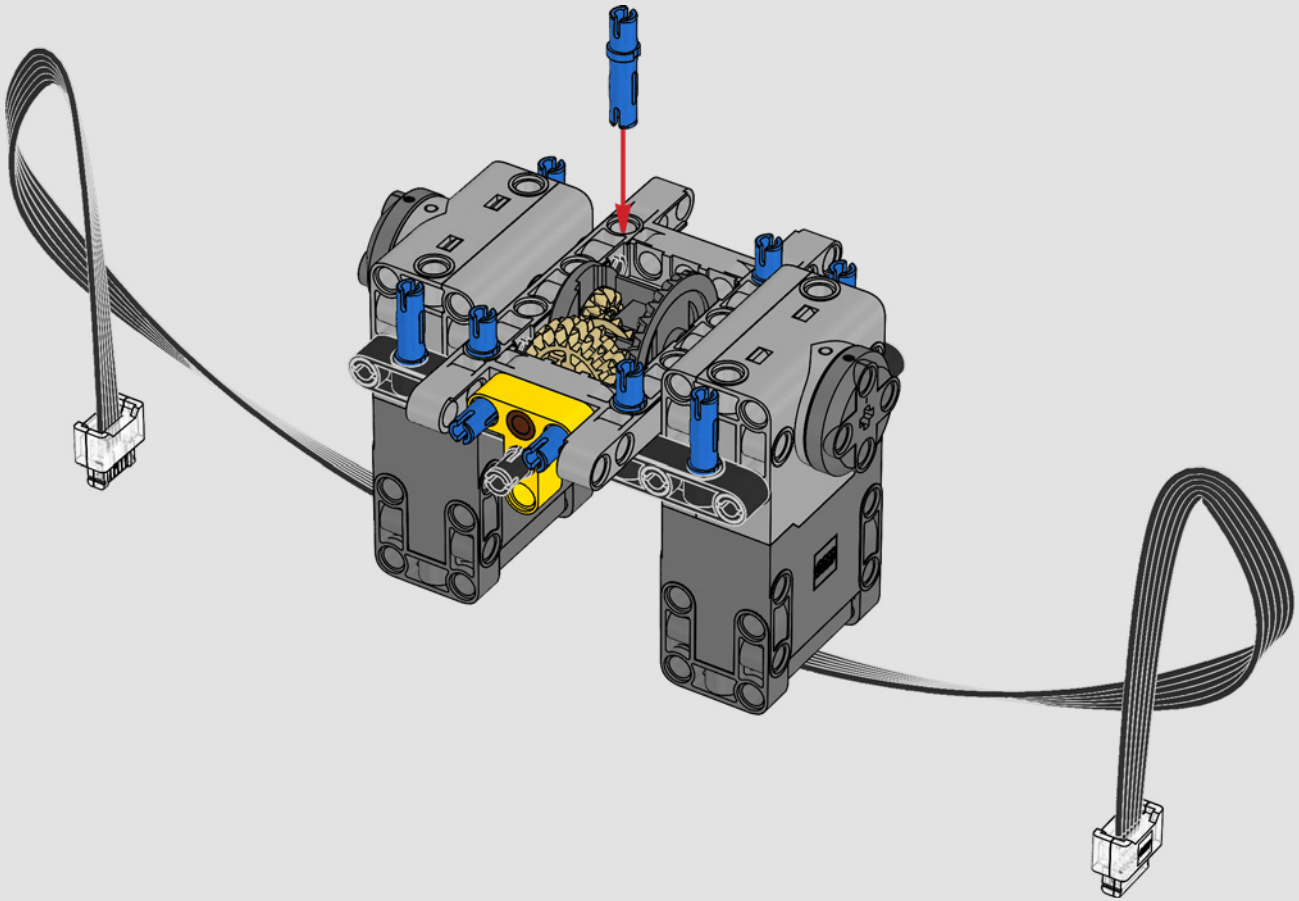

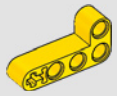

10

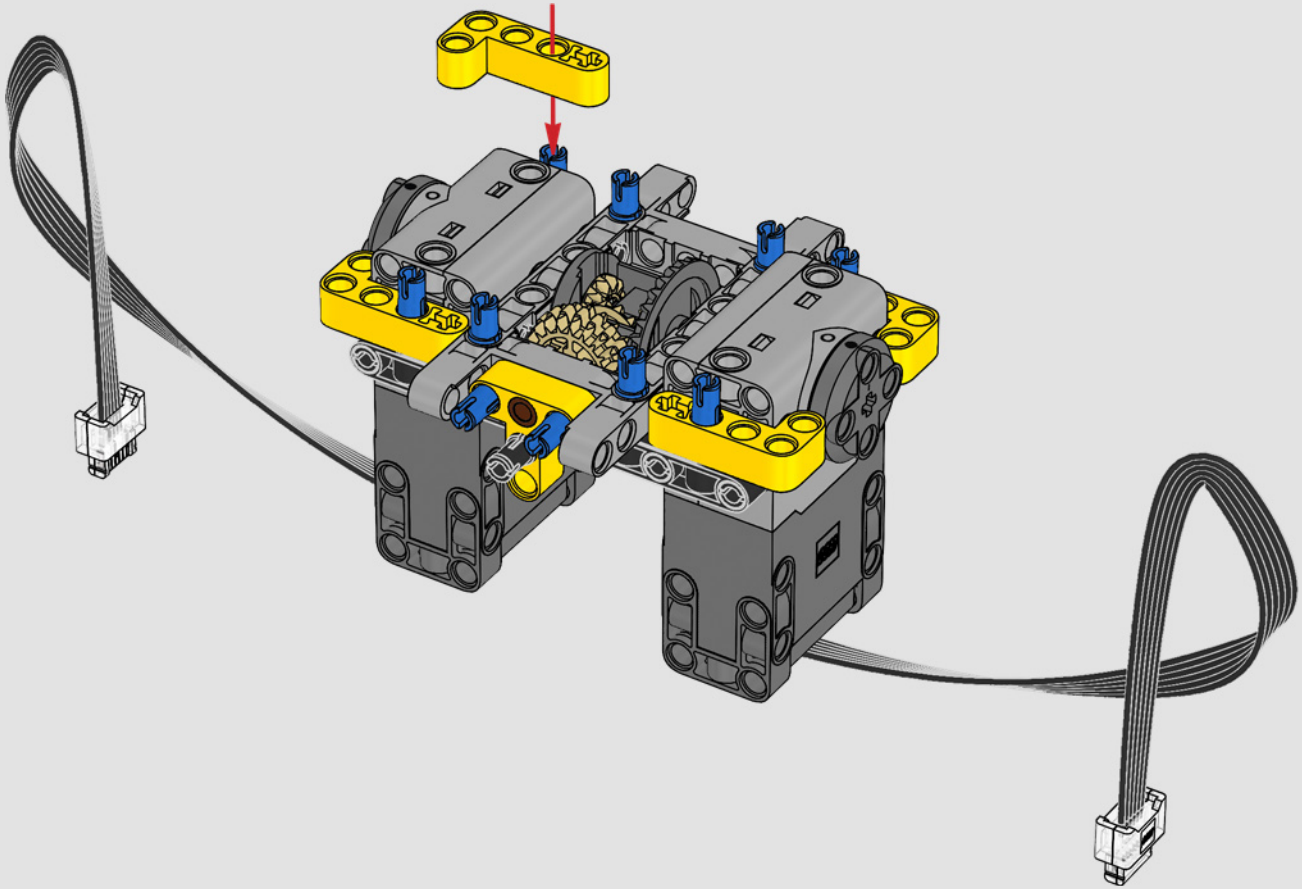

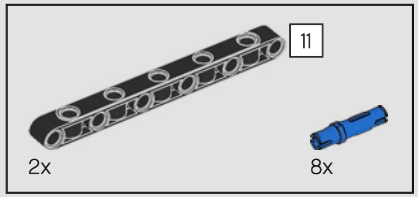

11

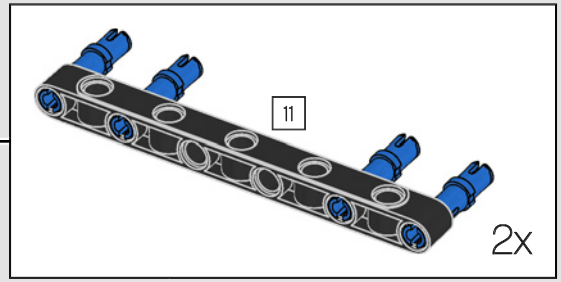

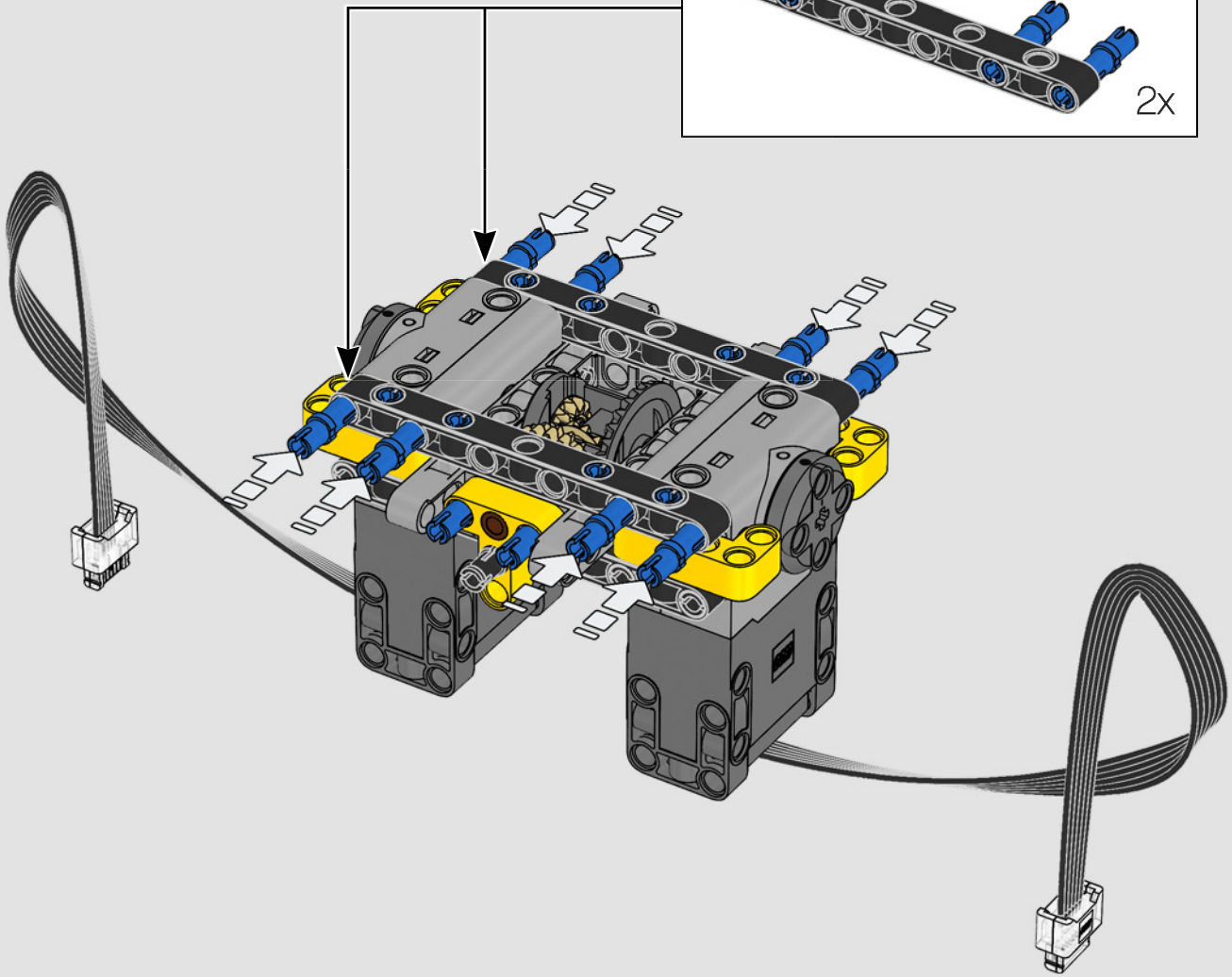

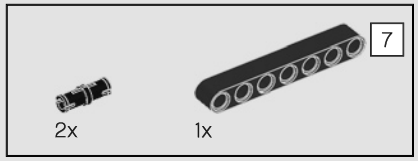

12

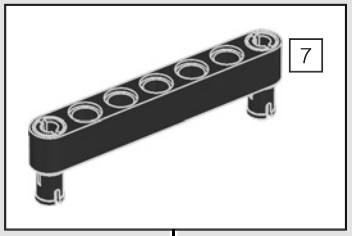

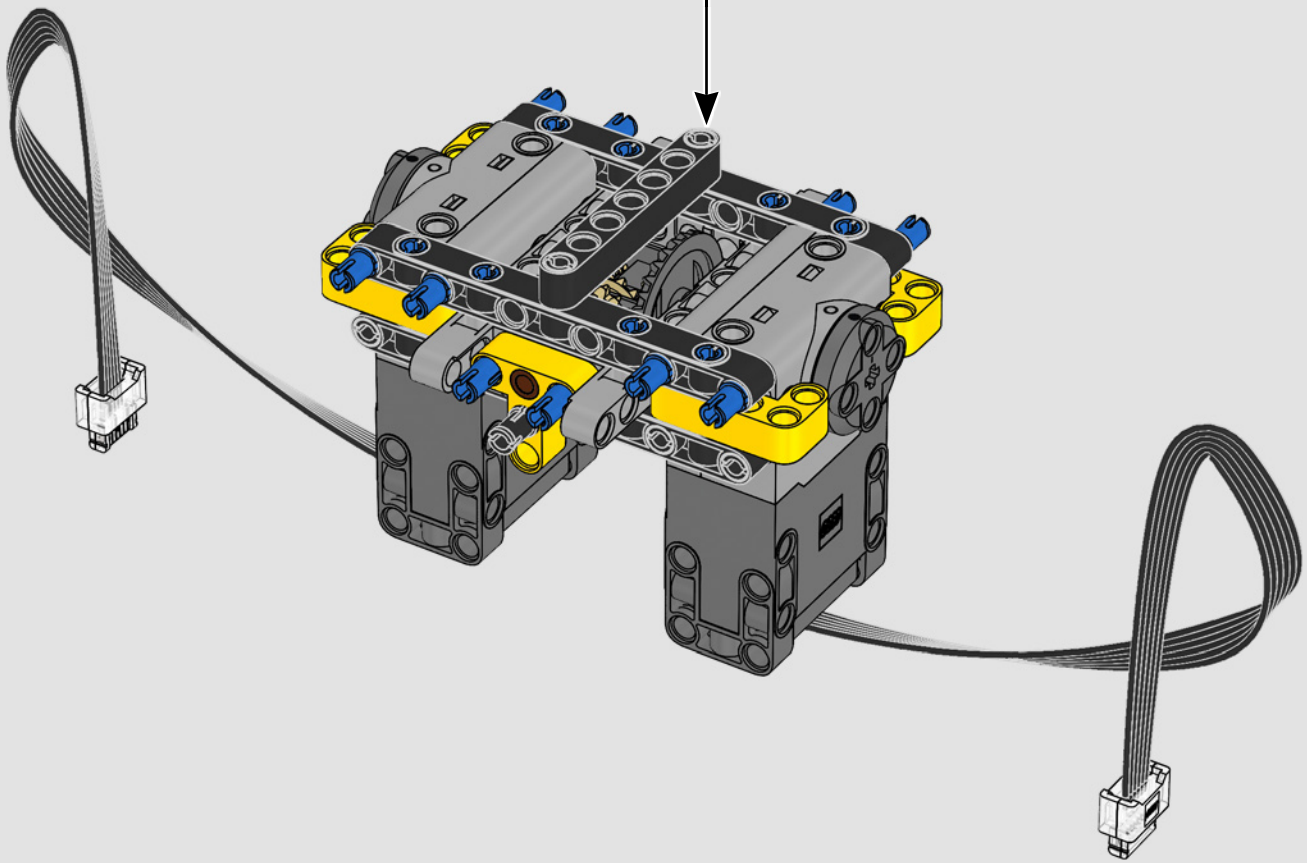

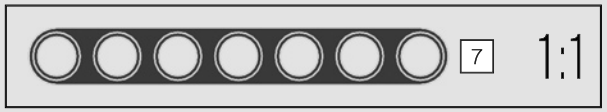

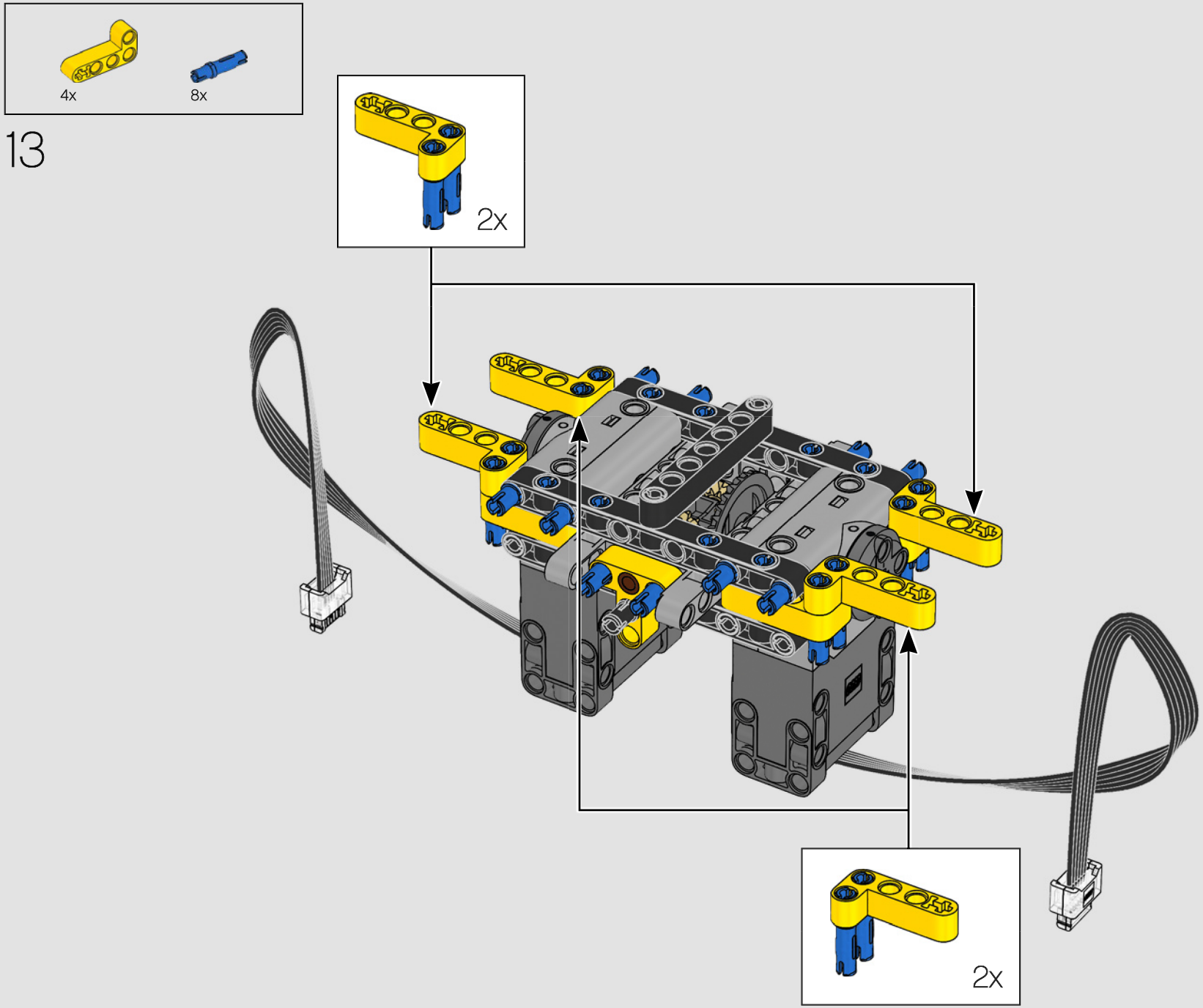
4x
8x
13
2x
2x

2x

14

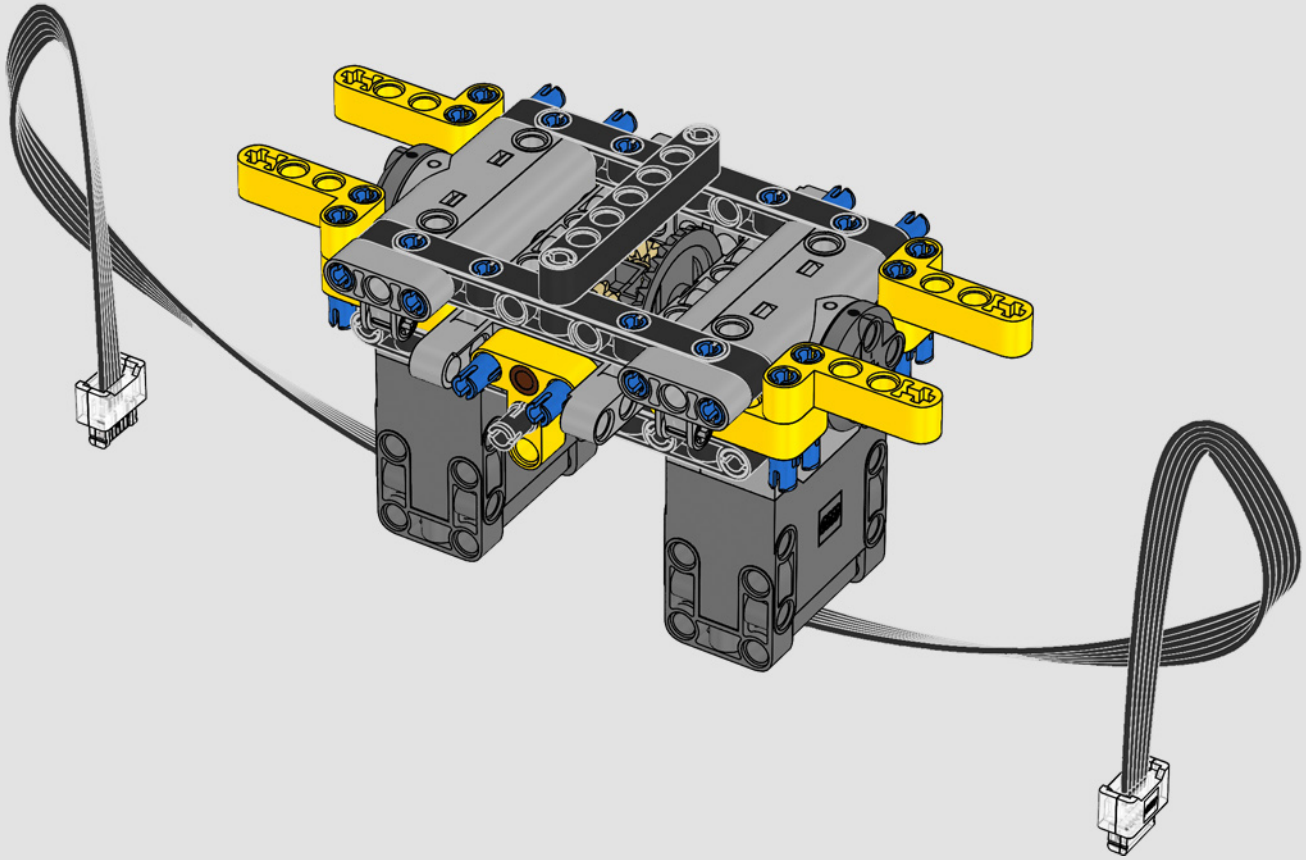

15

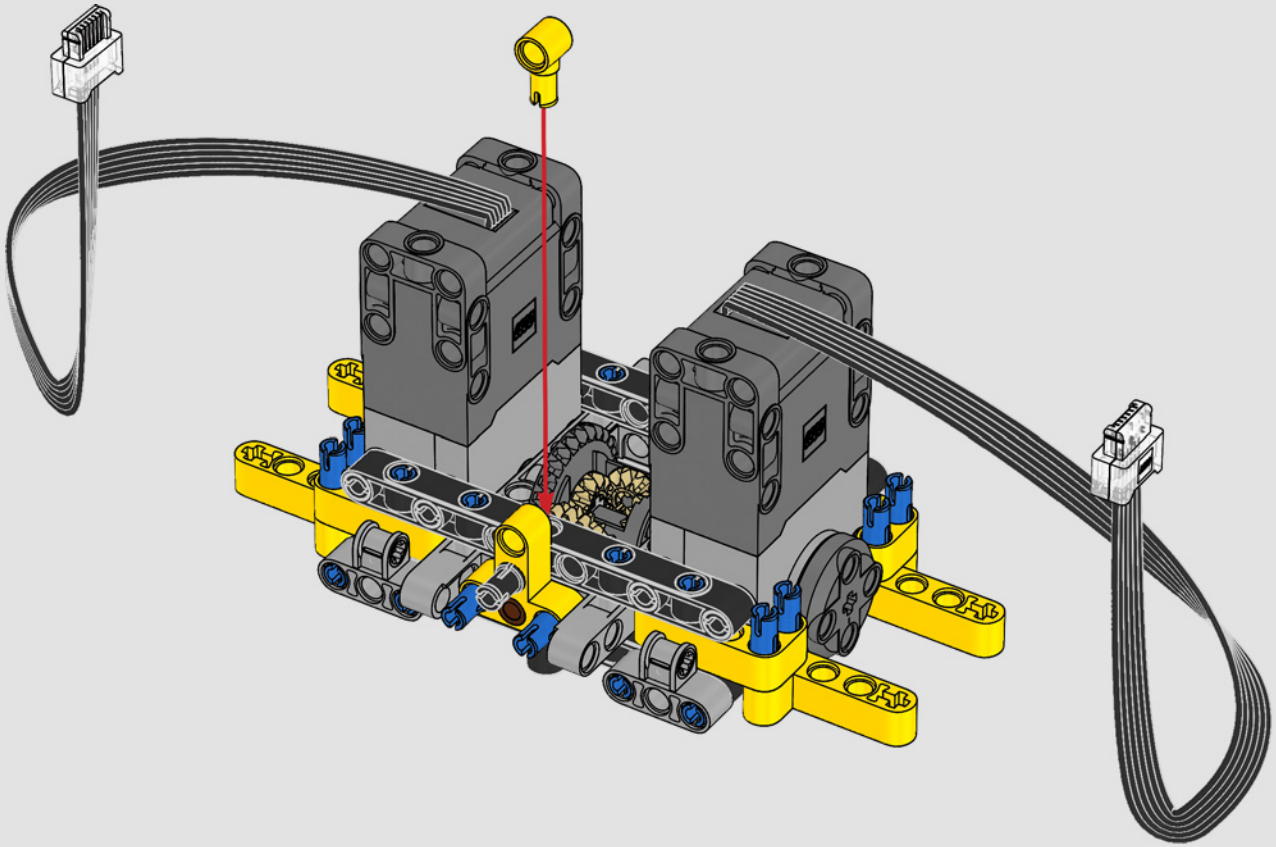

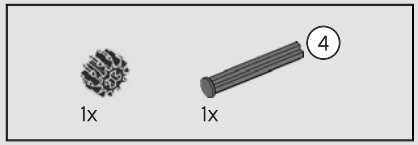

16

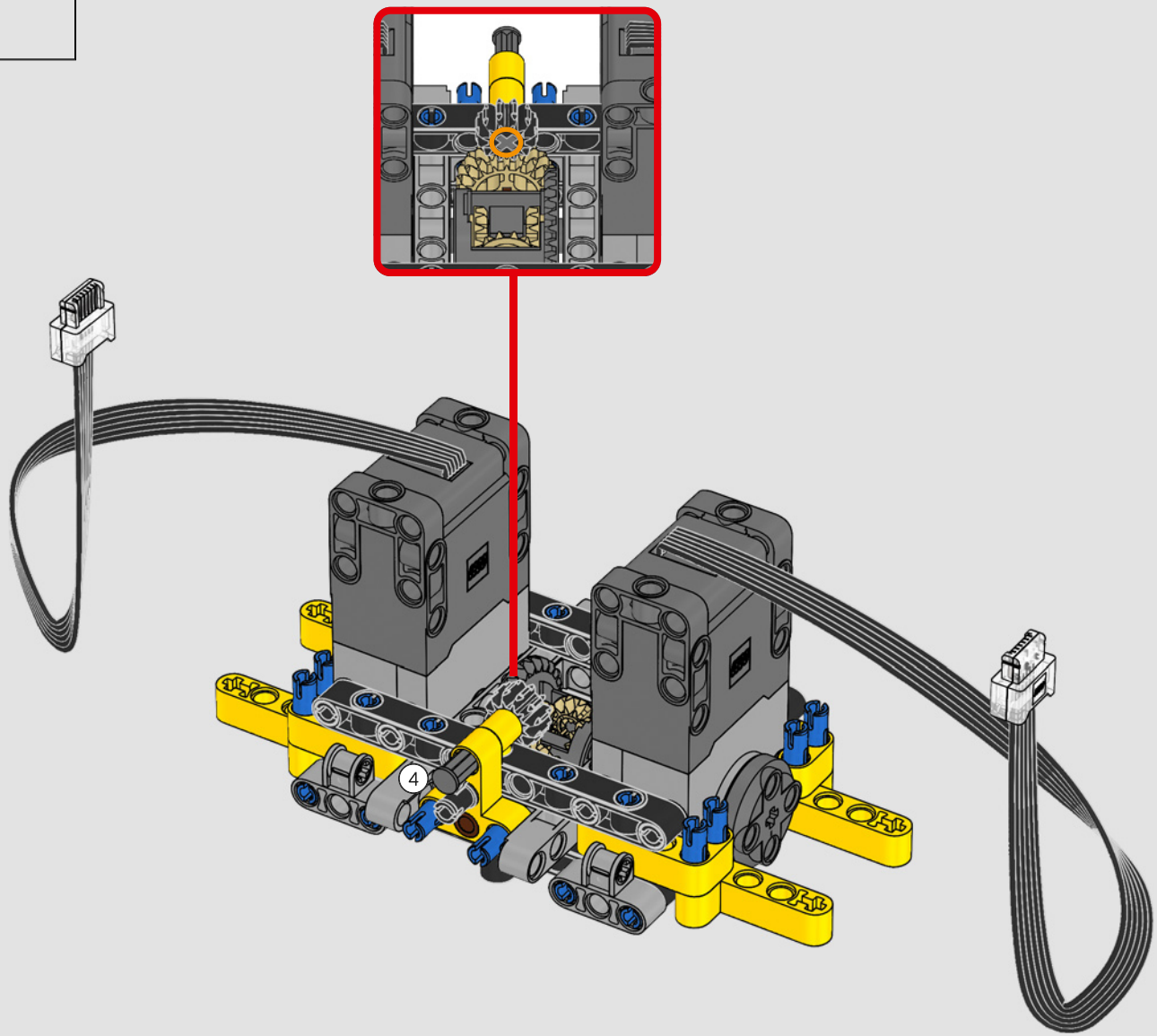

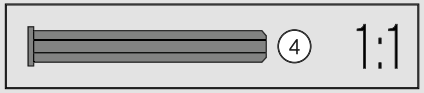

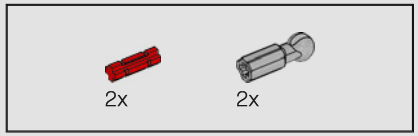

17

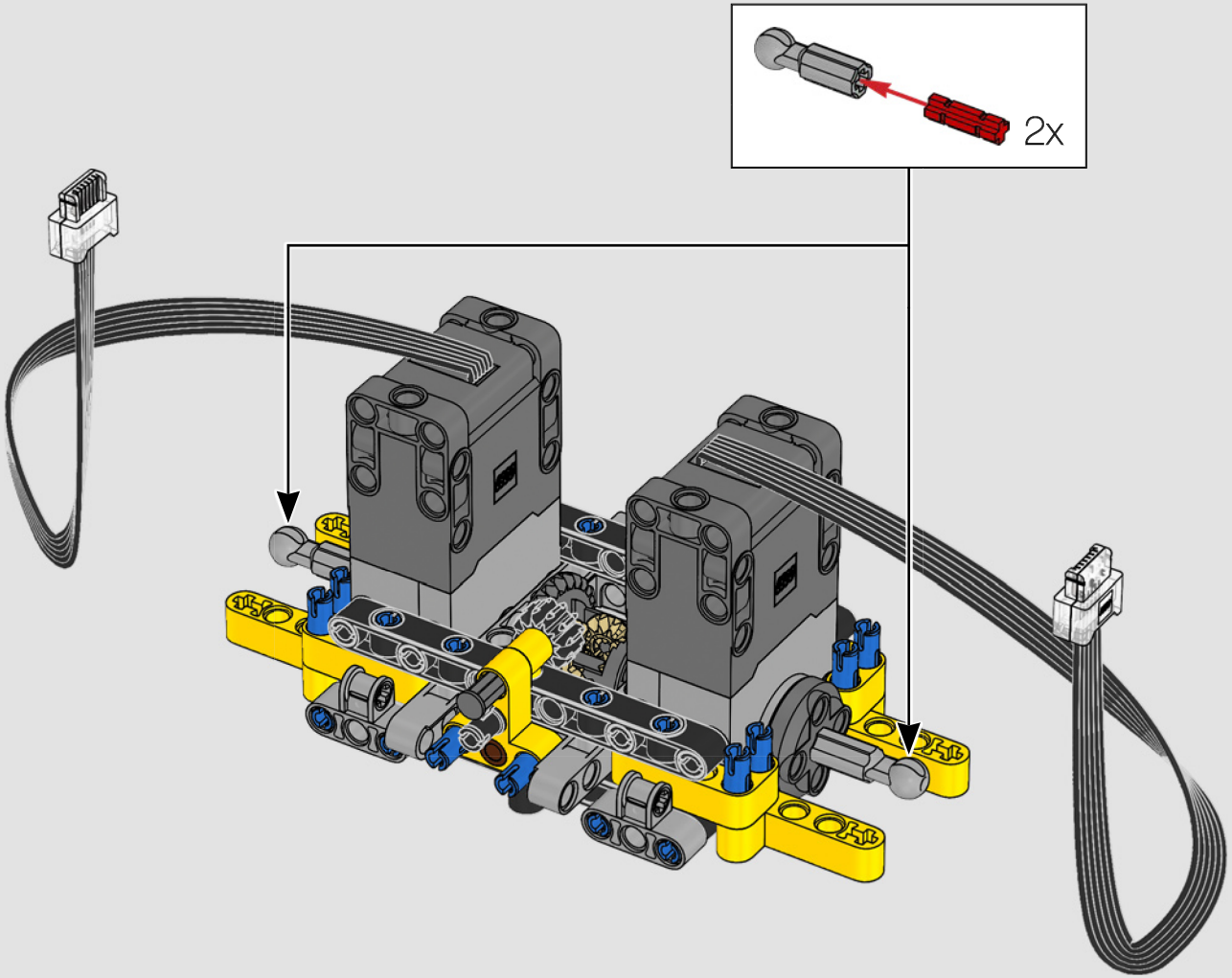

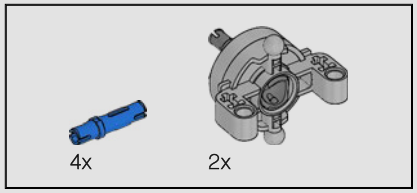

18

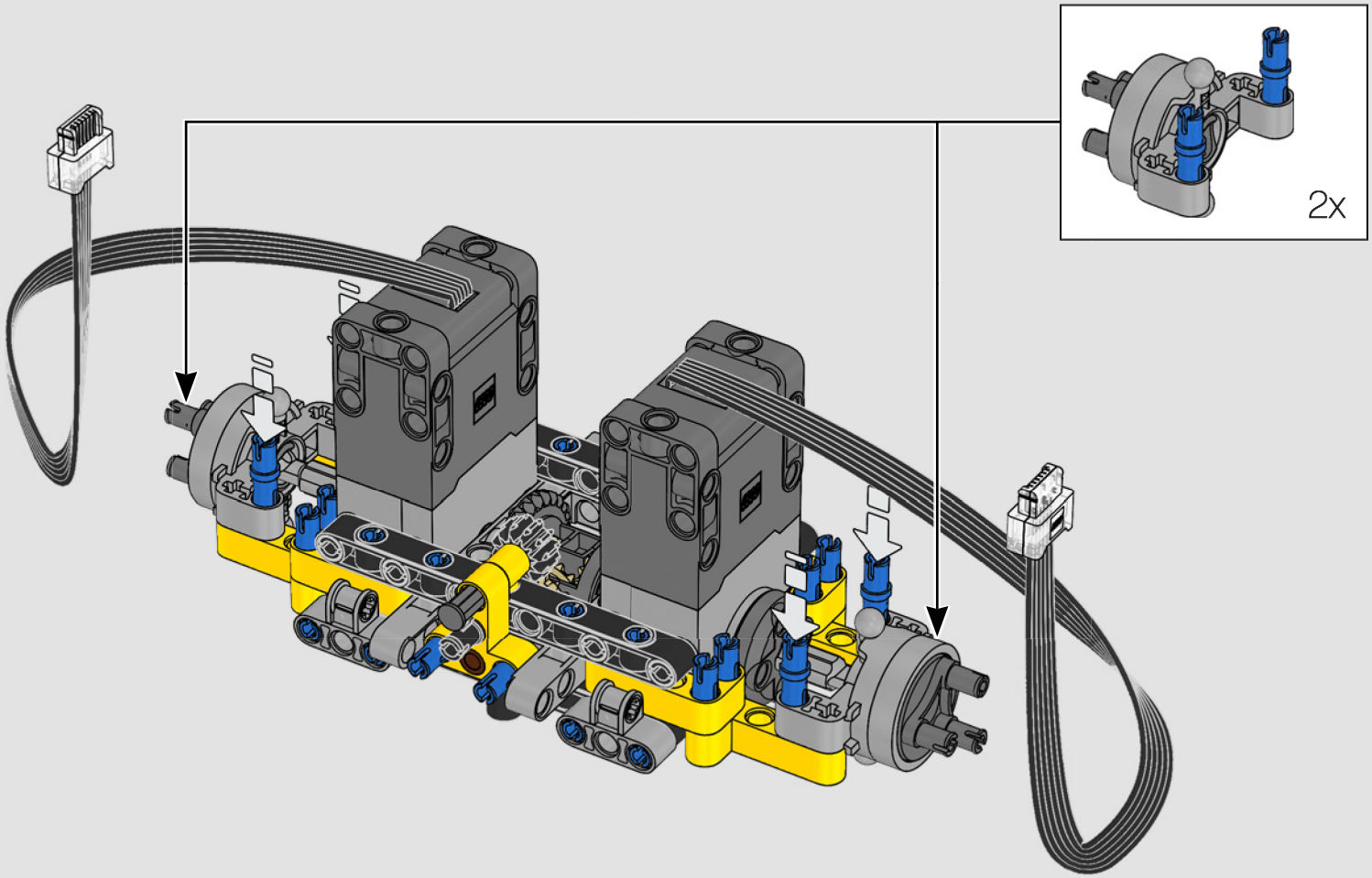

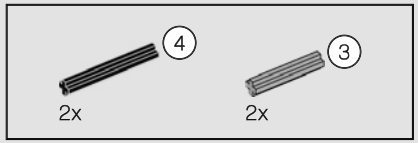

19

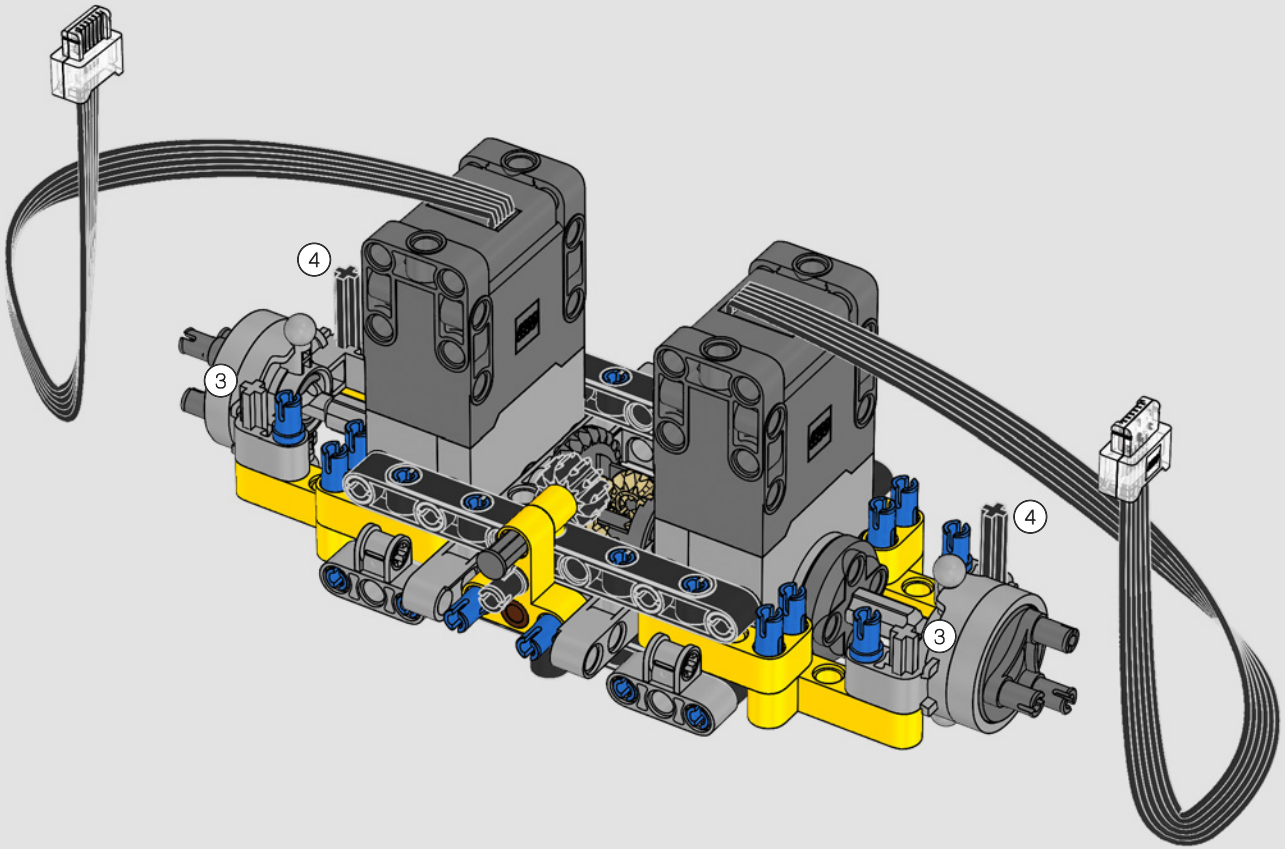

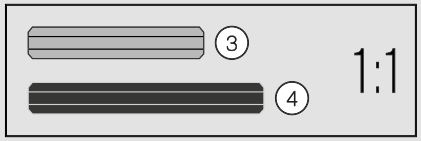

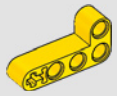

4x

20

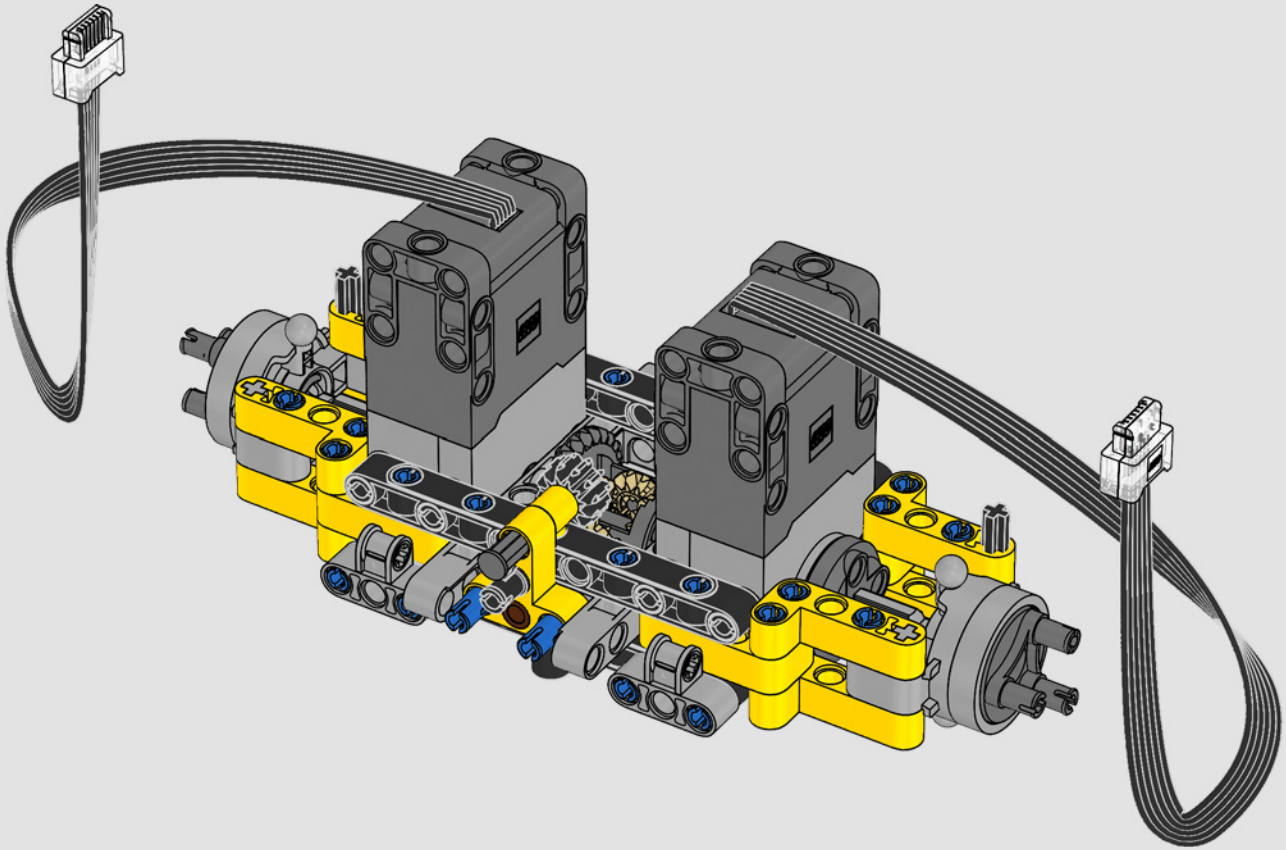

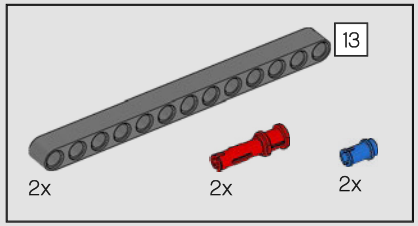

21

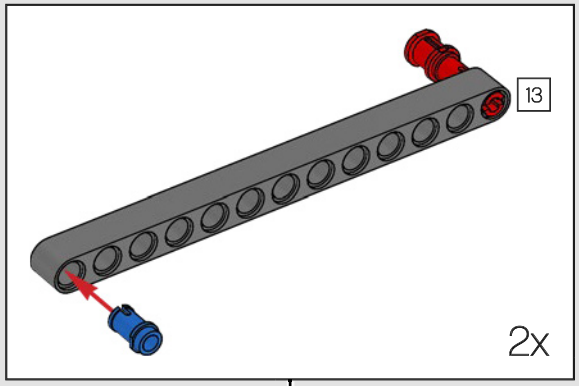

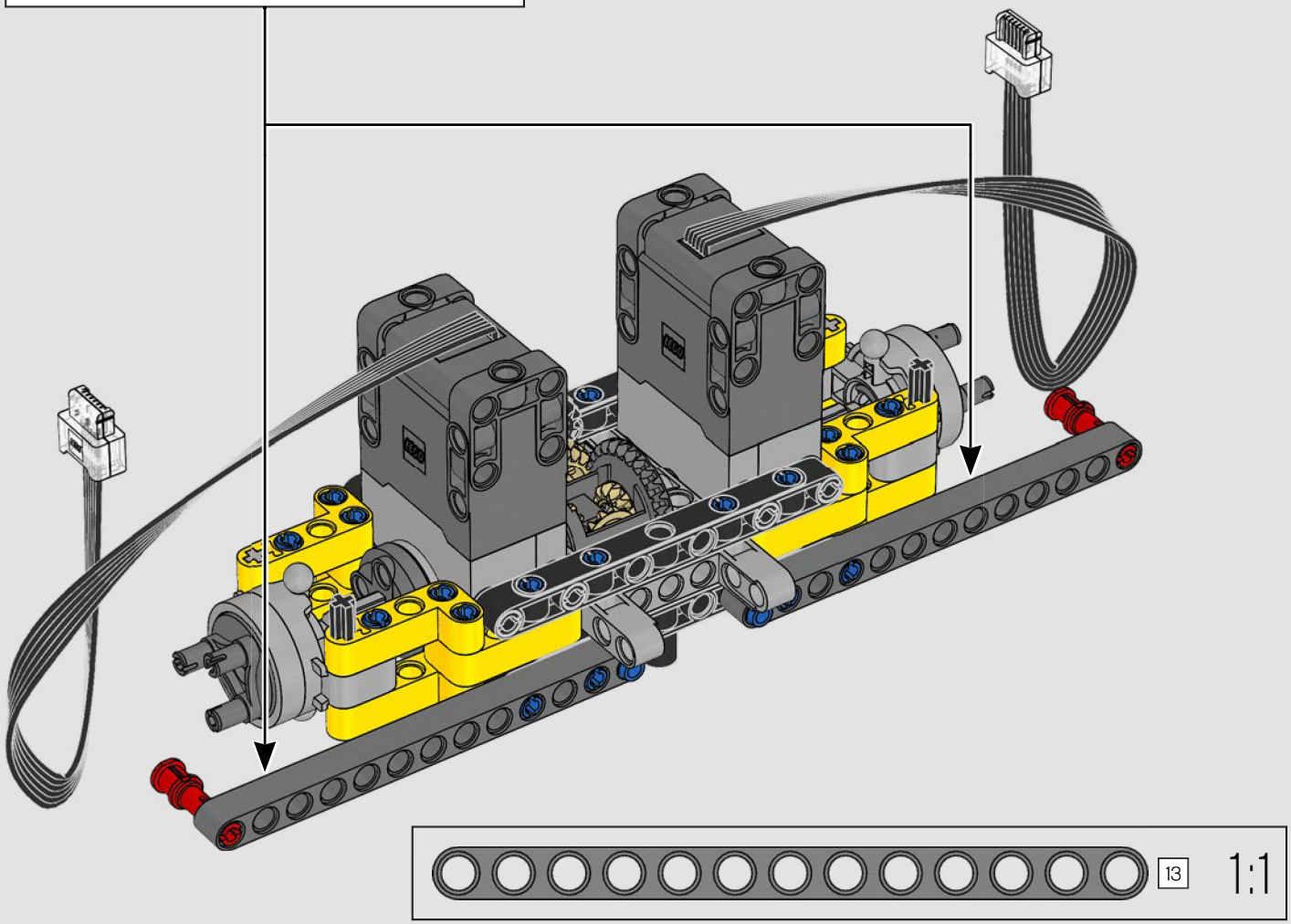

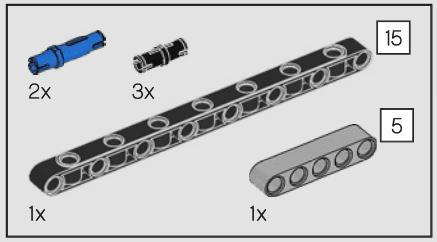

22

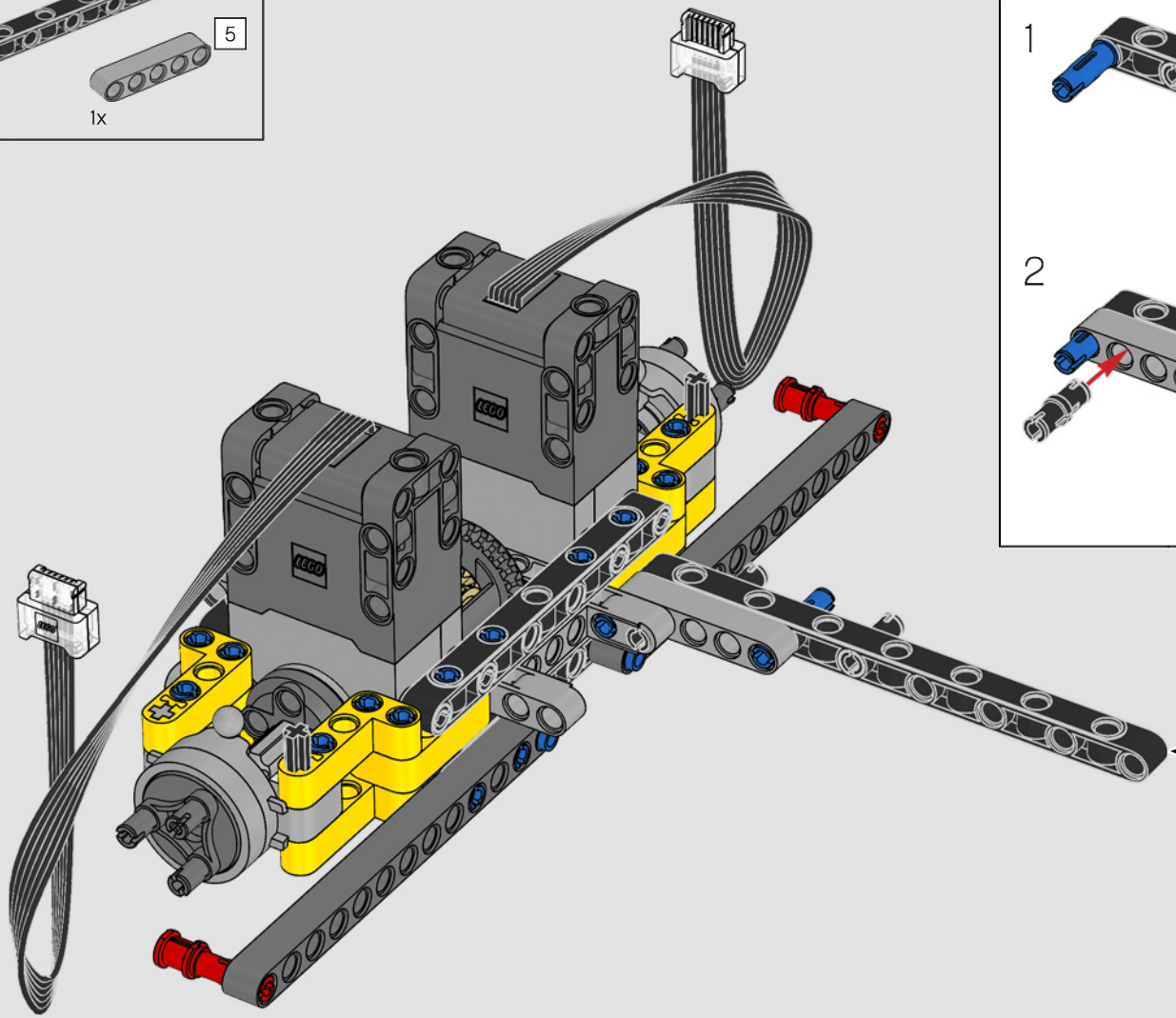

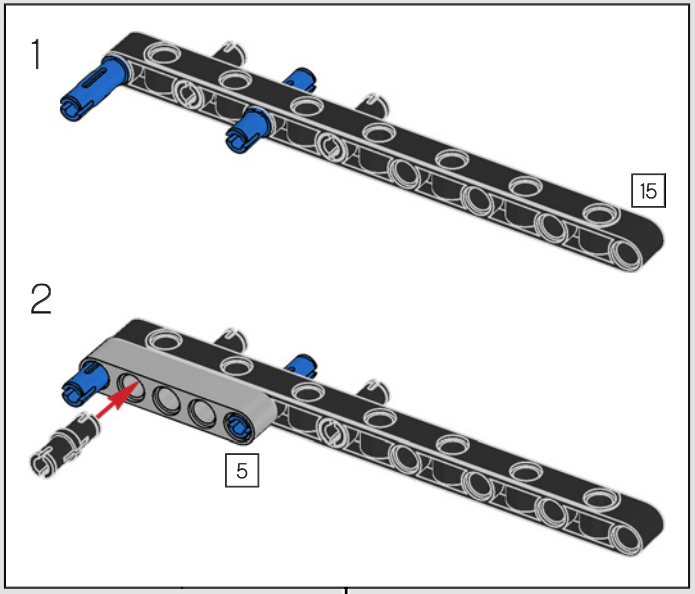

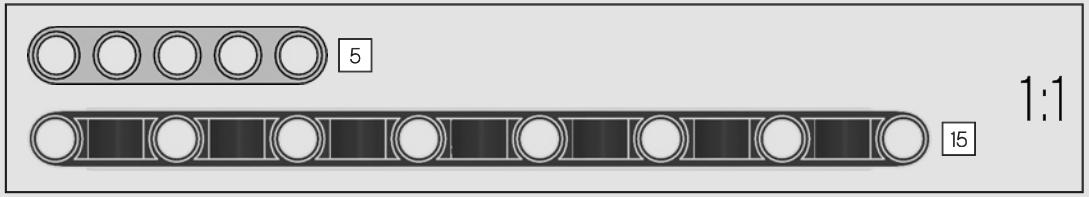

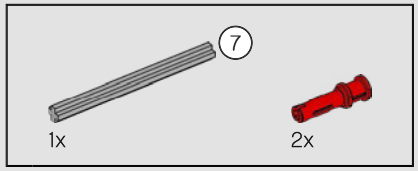

23

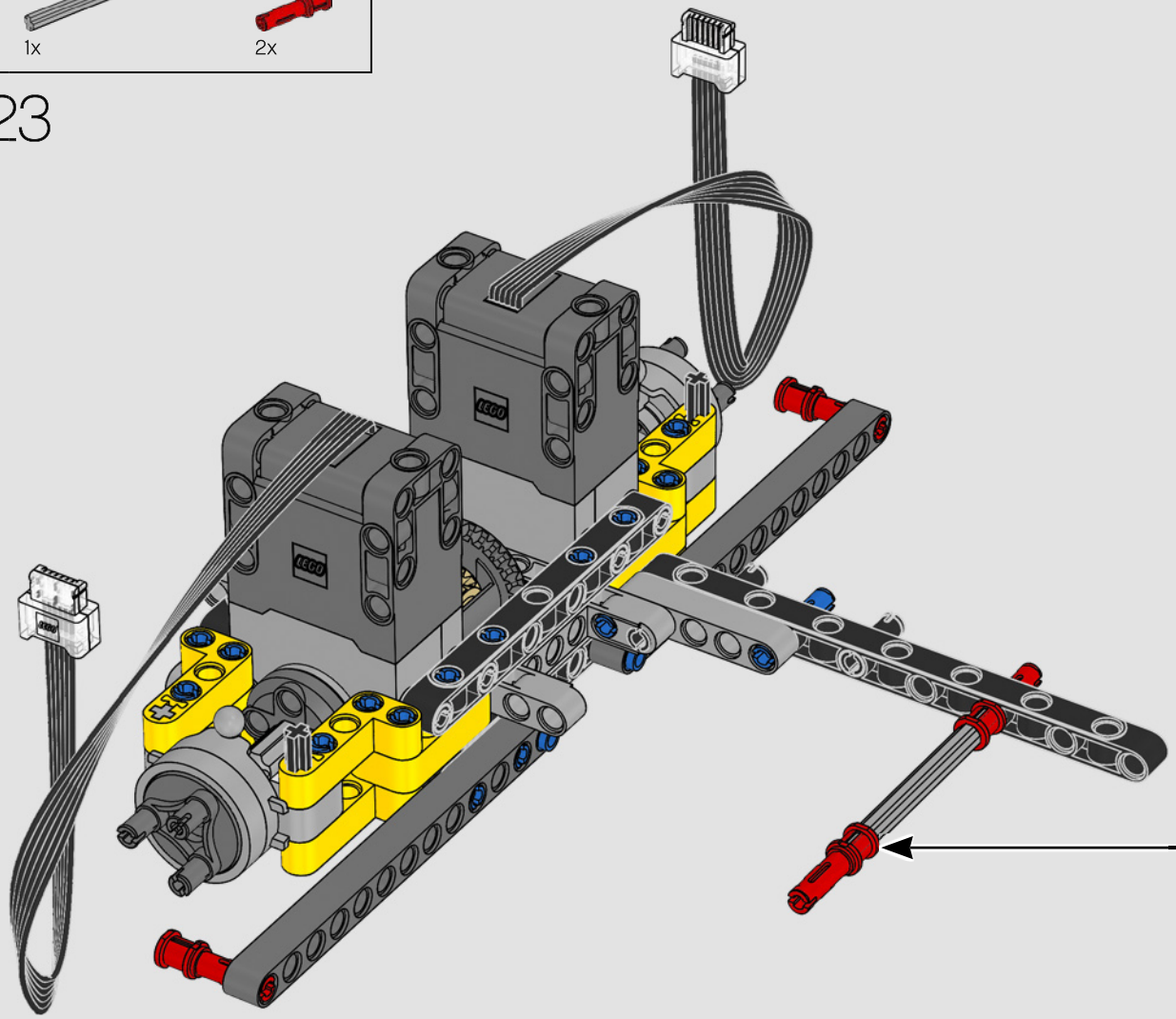

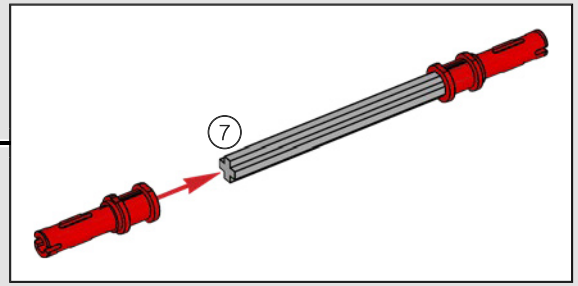

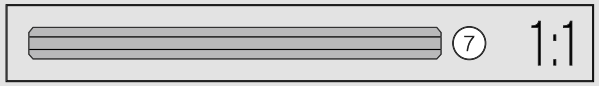

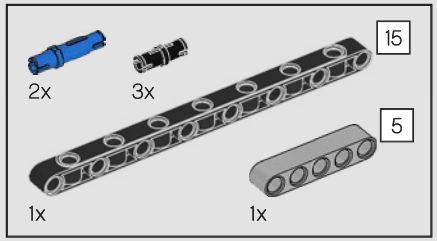

24

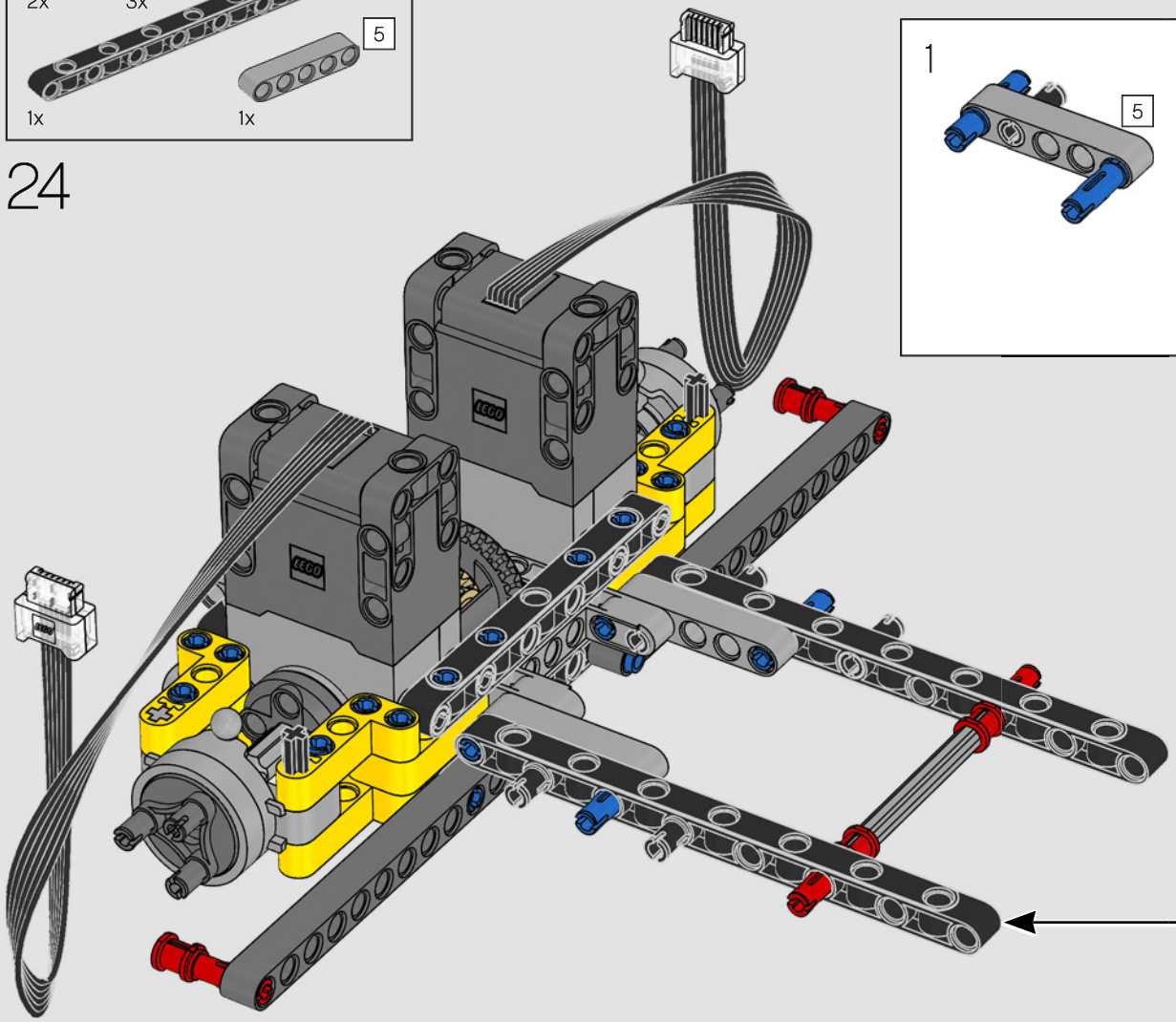

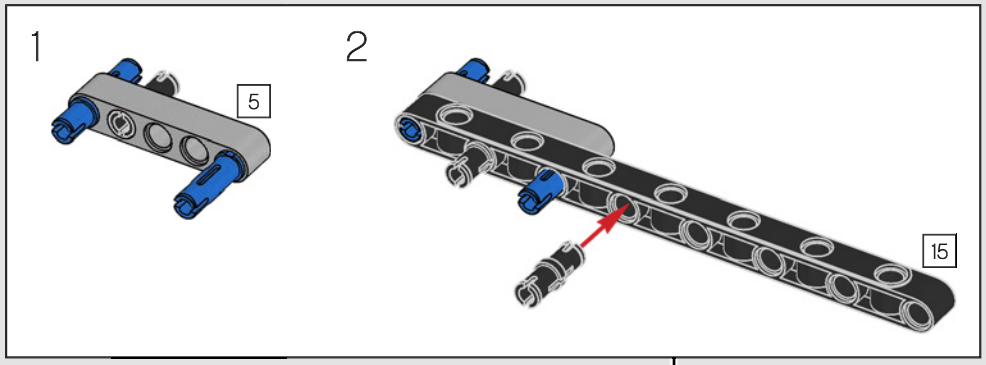

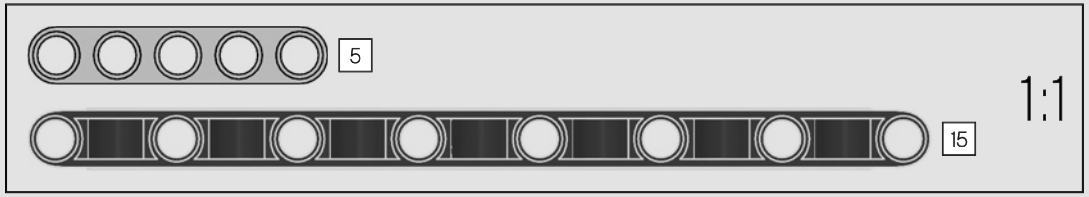

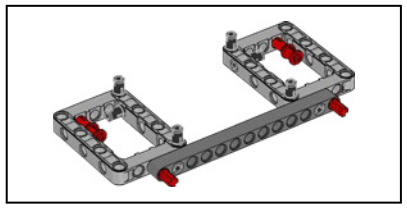

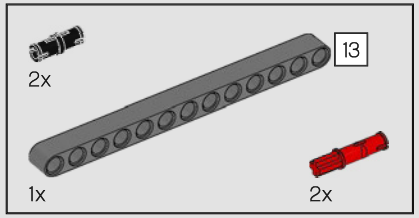

25

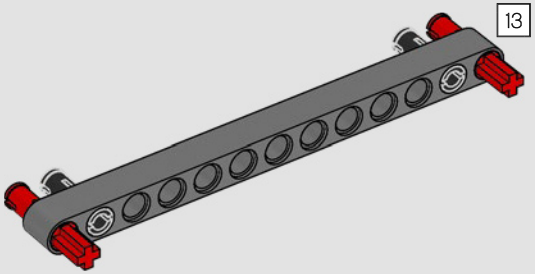

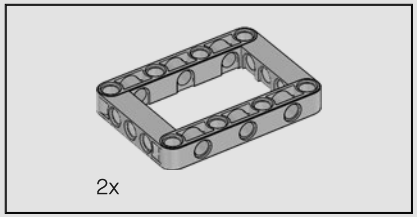

26

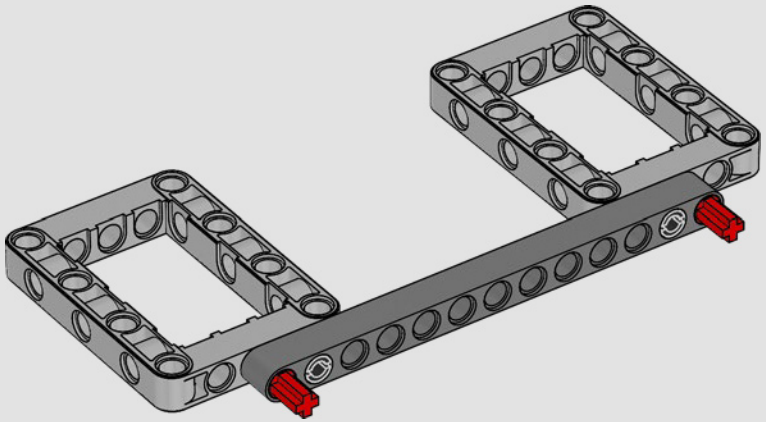

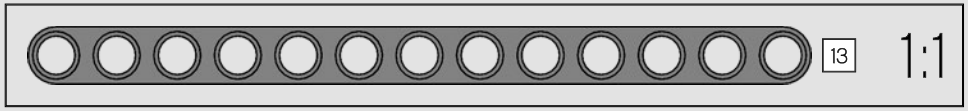

2x

27

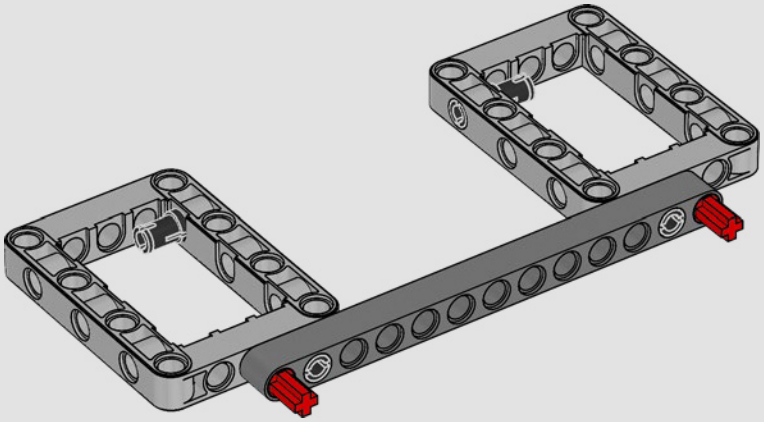

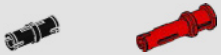

4x 2x

28

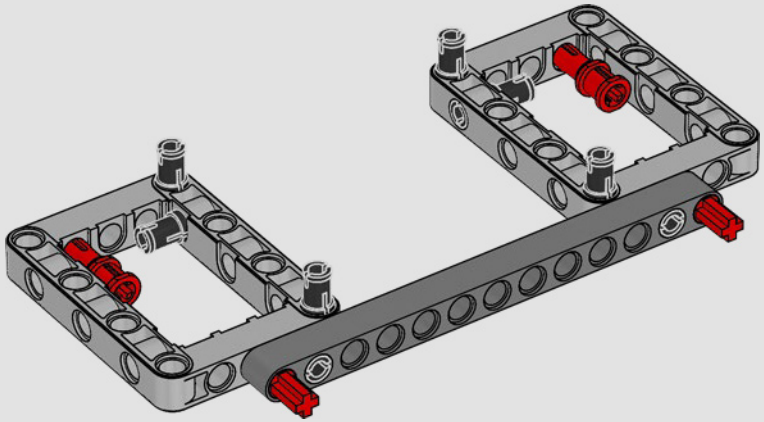

29

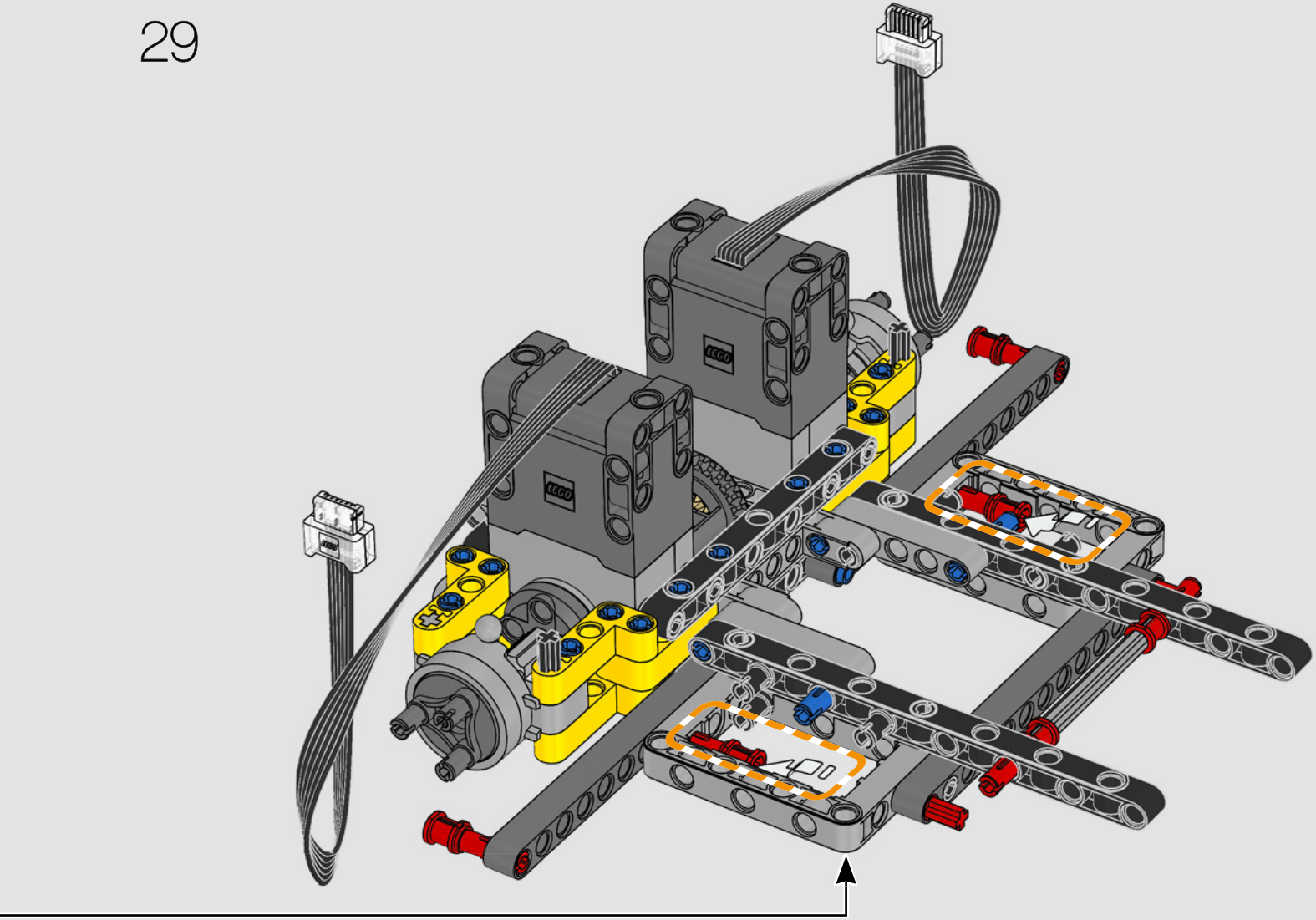

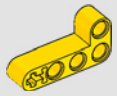

30

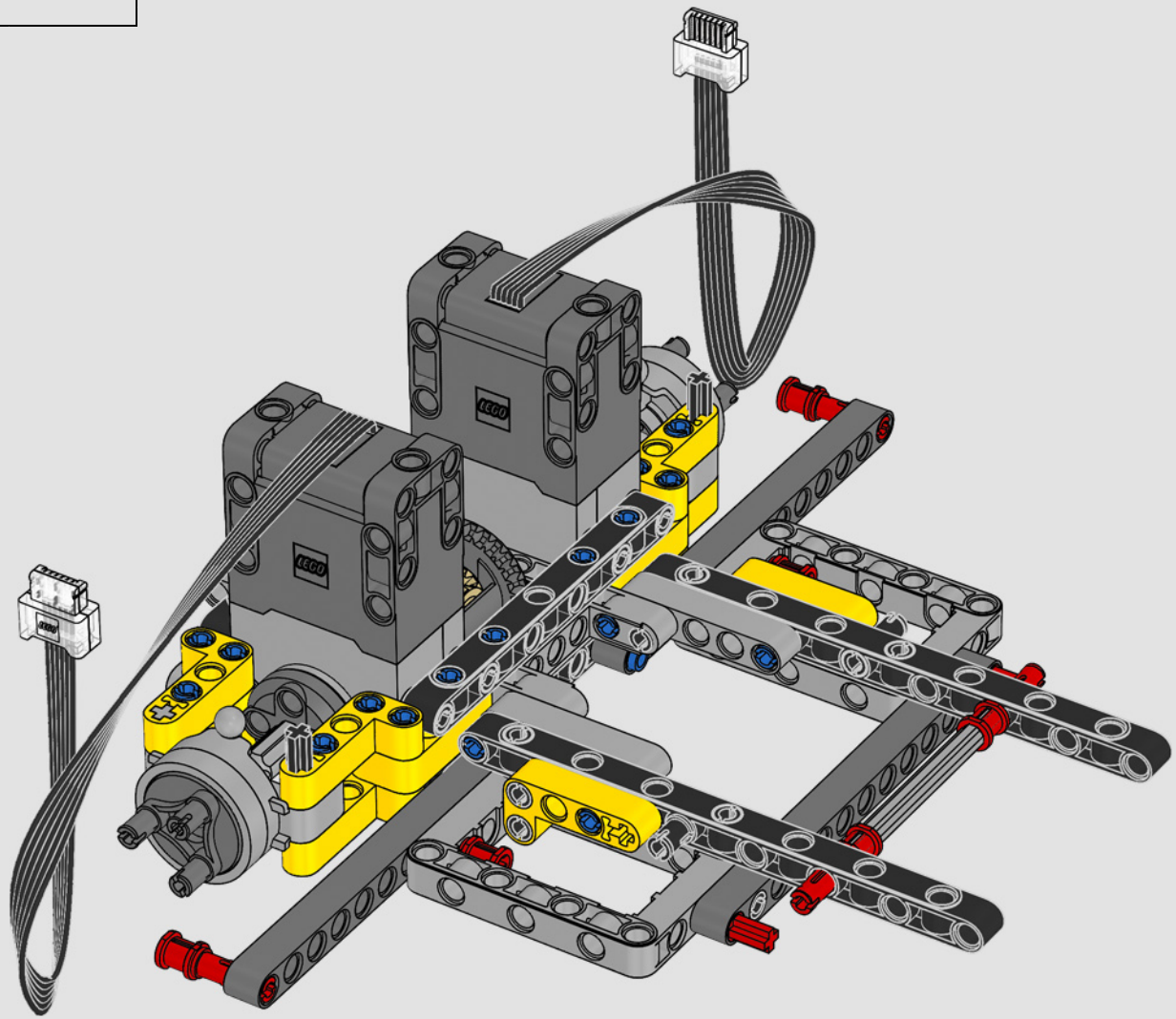

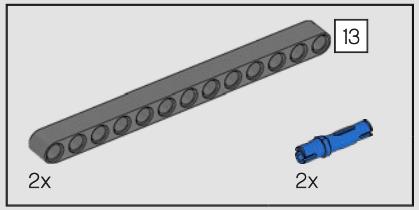

31

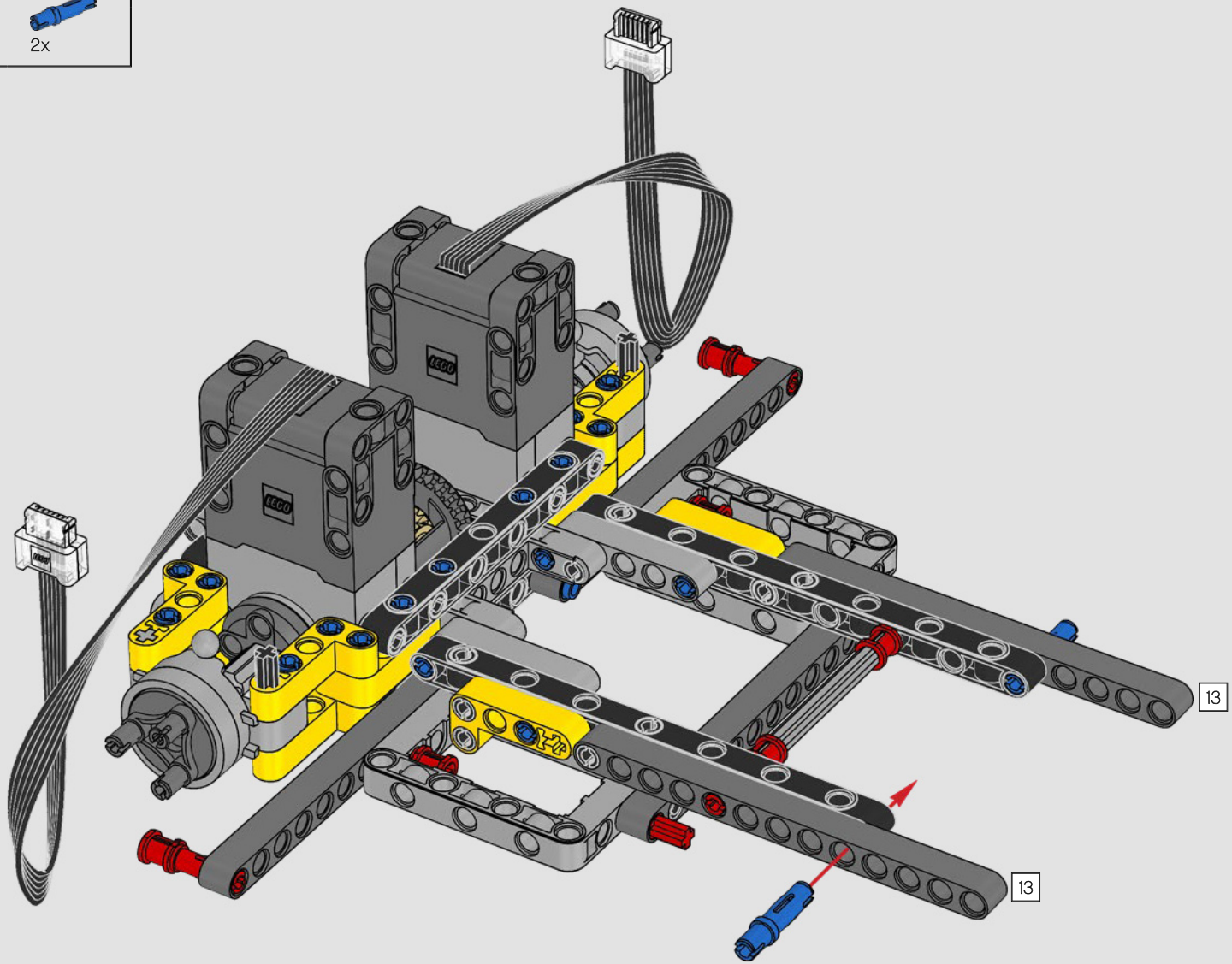

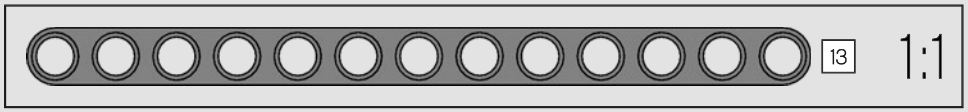

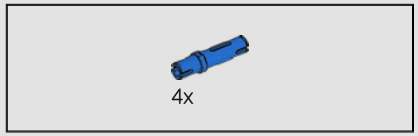

32

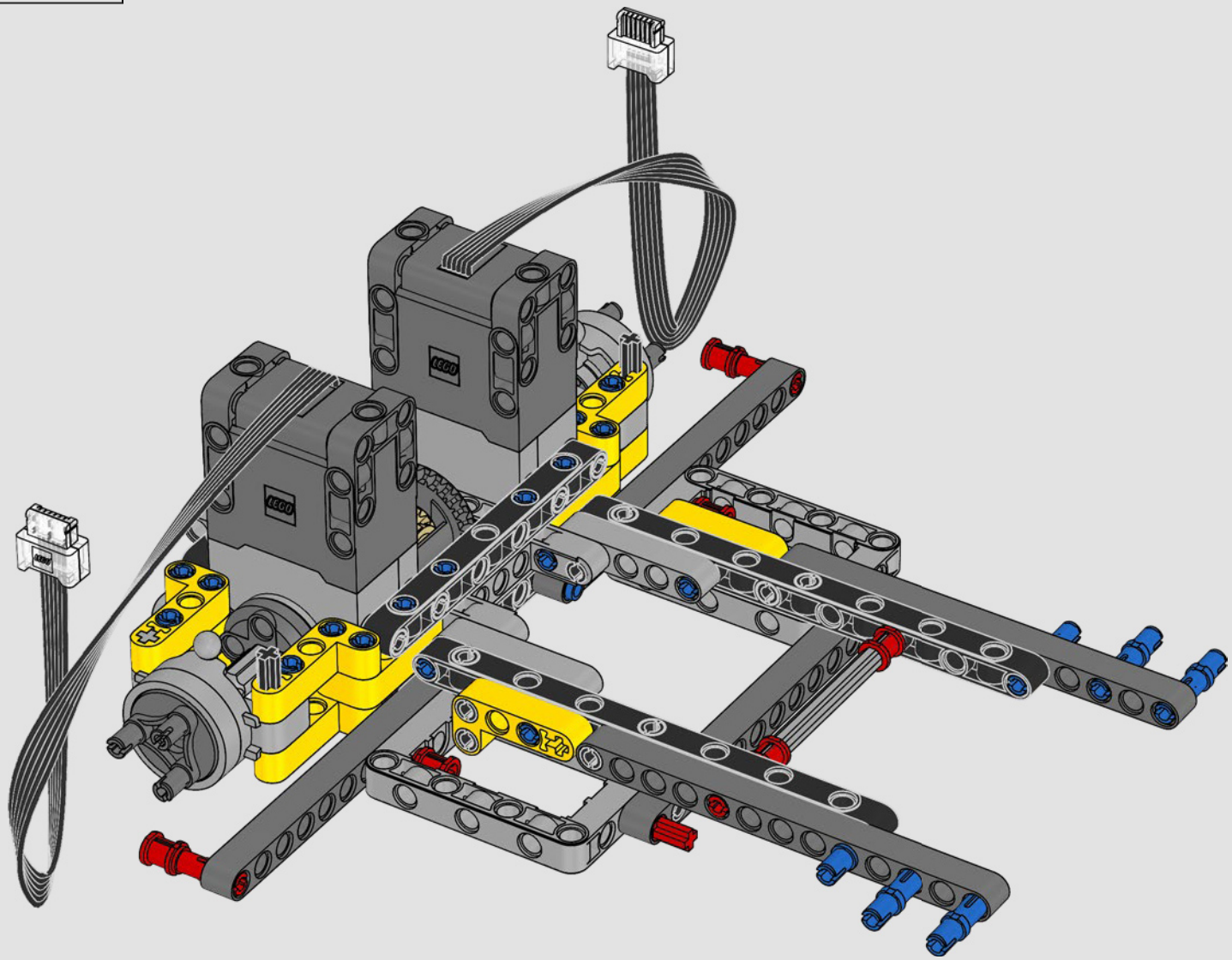

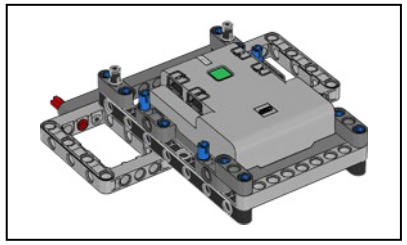

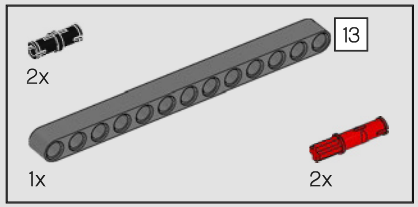

33

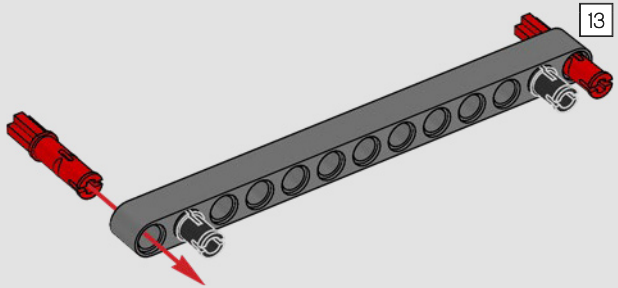

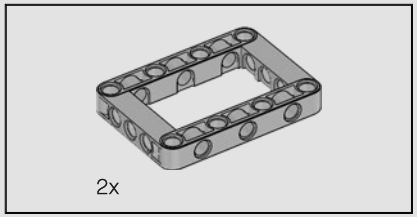

34

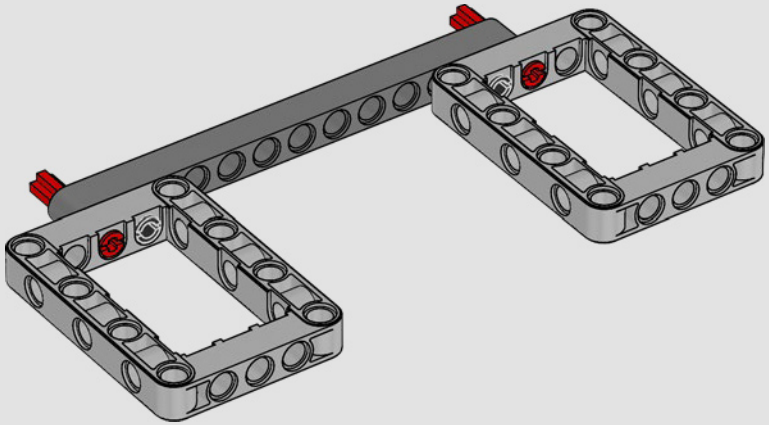

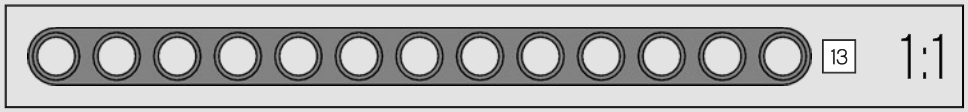

6x

35

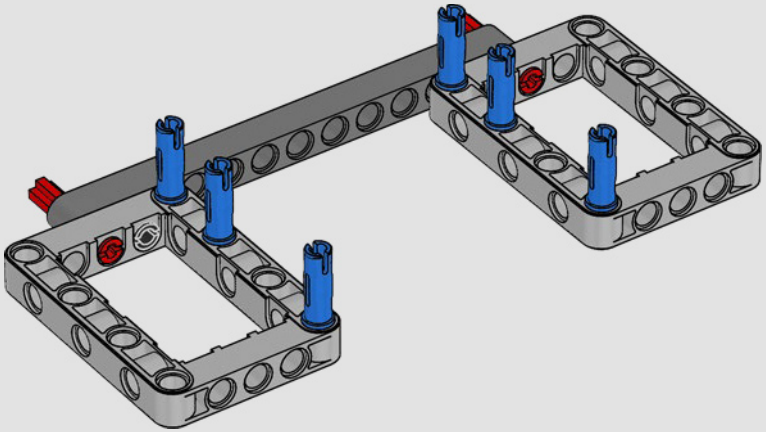

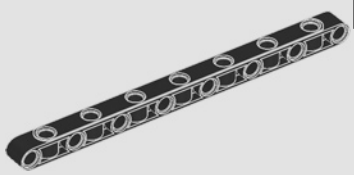

2x

36

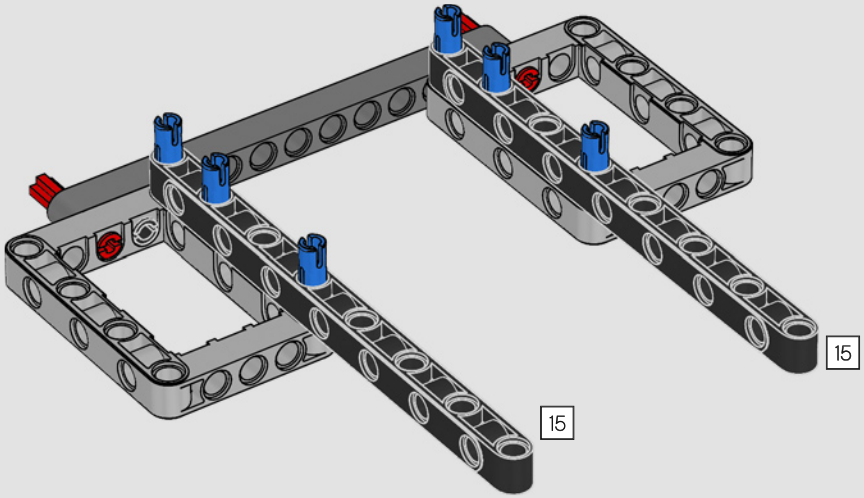

15

1:1

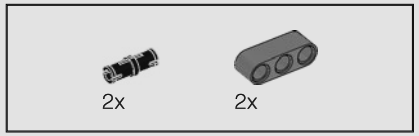

37

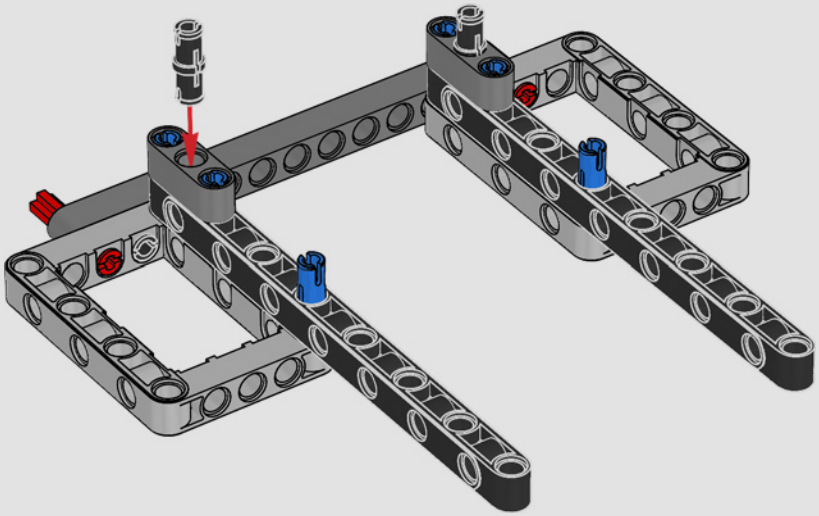

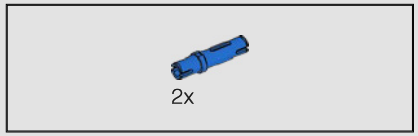

38

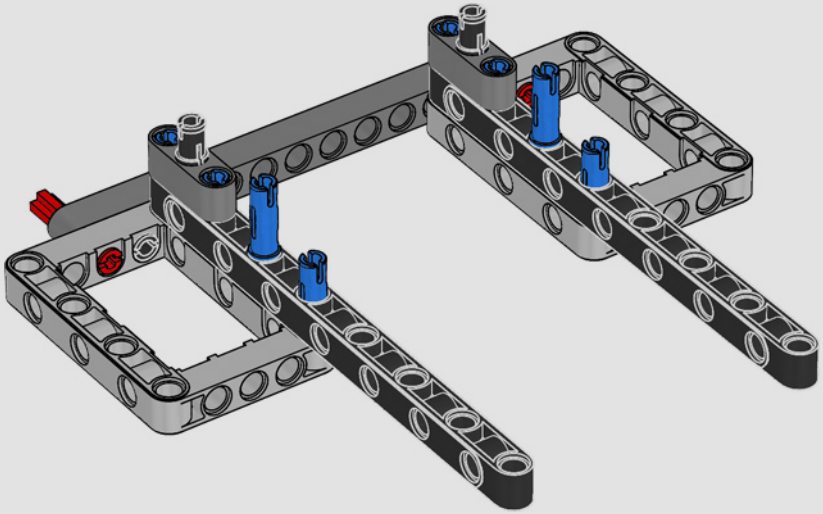

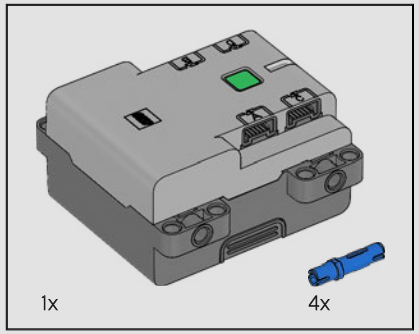

39

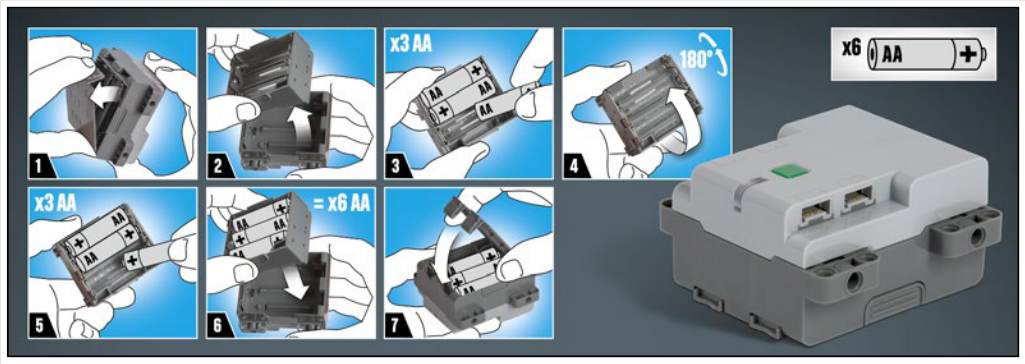

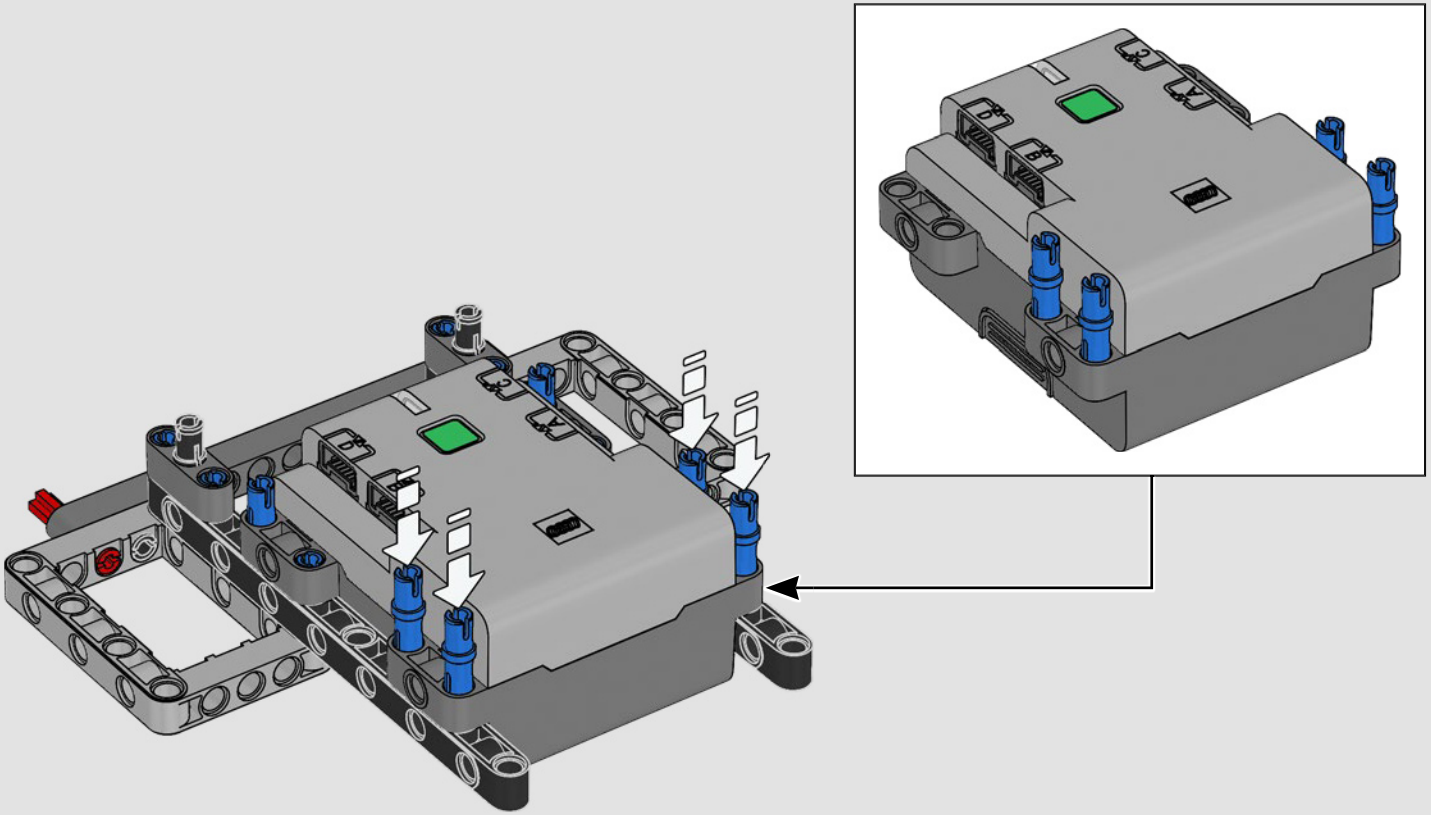

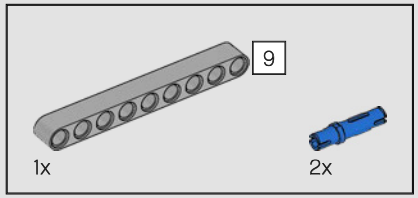

40

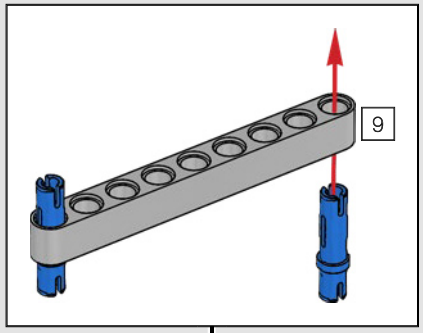

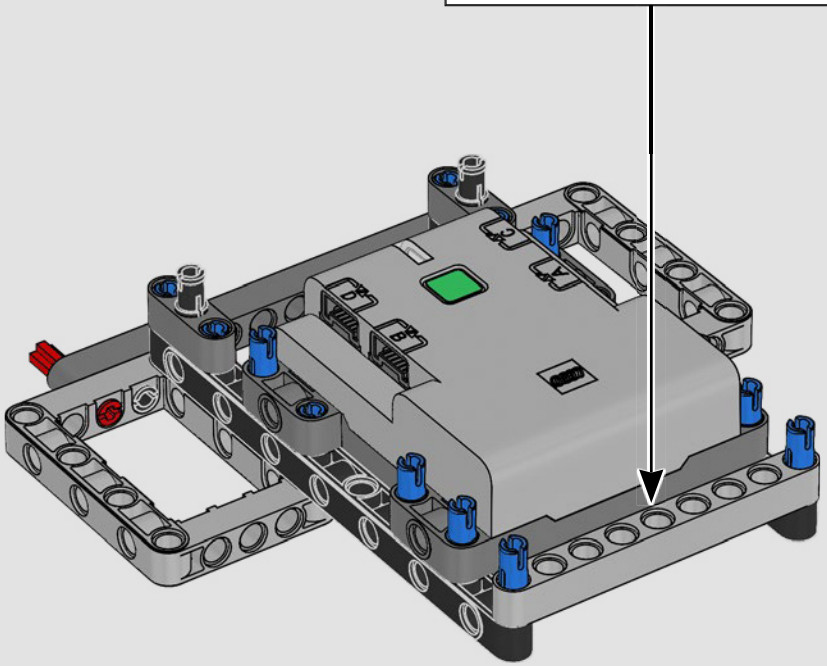

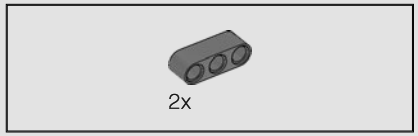

41

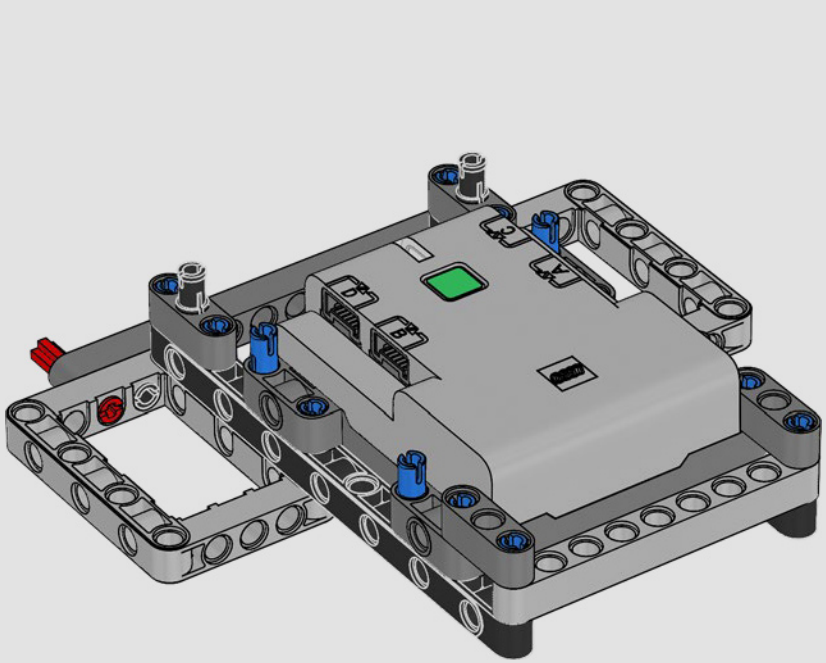

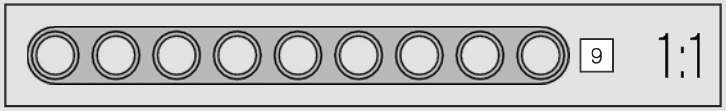

42

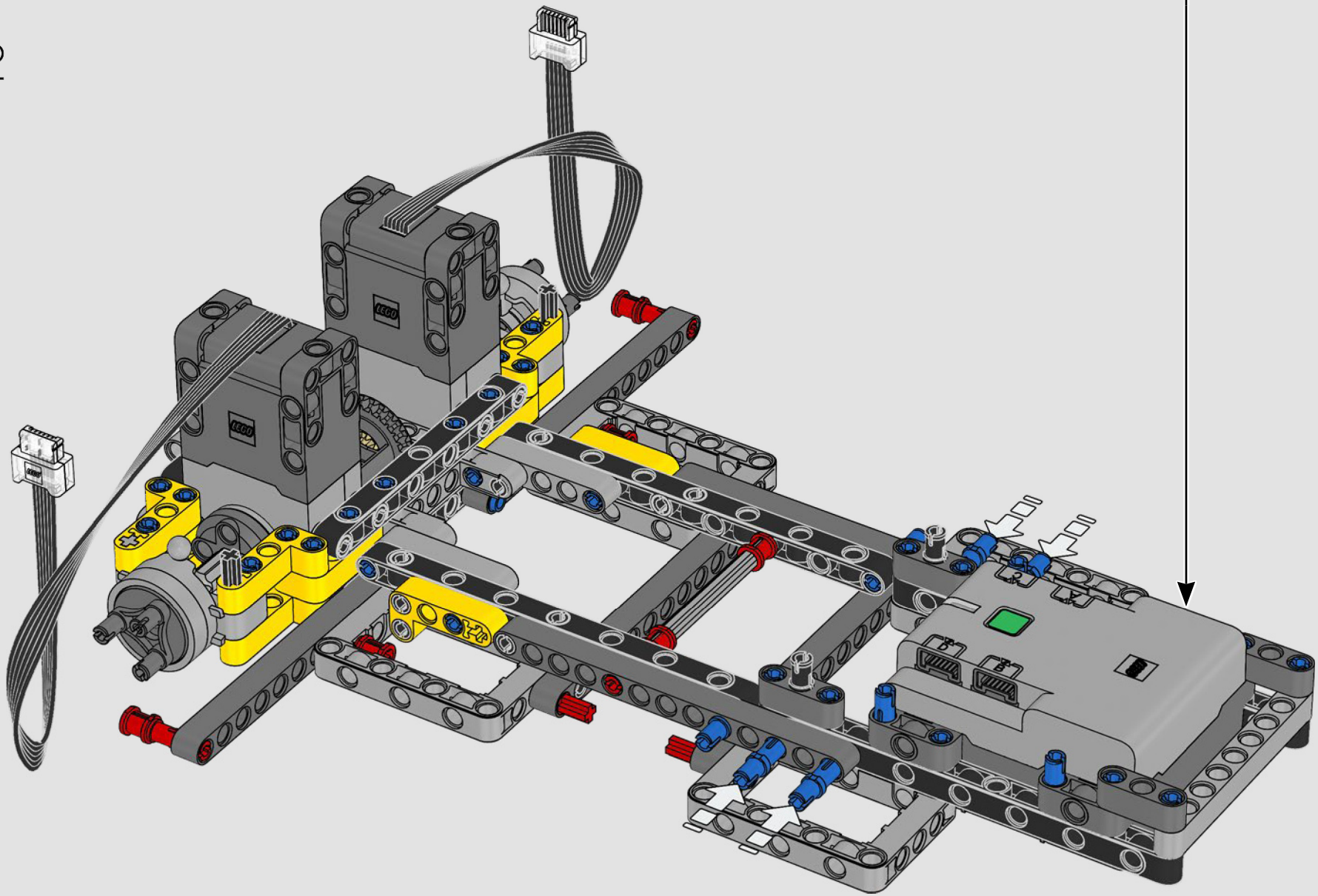

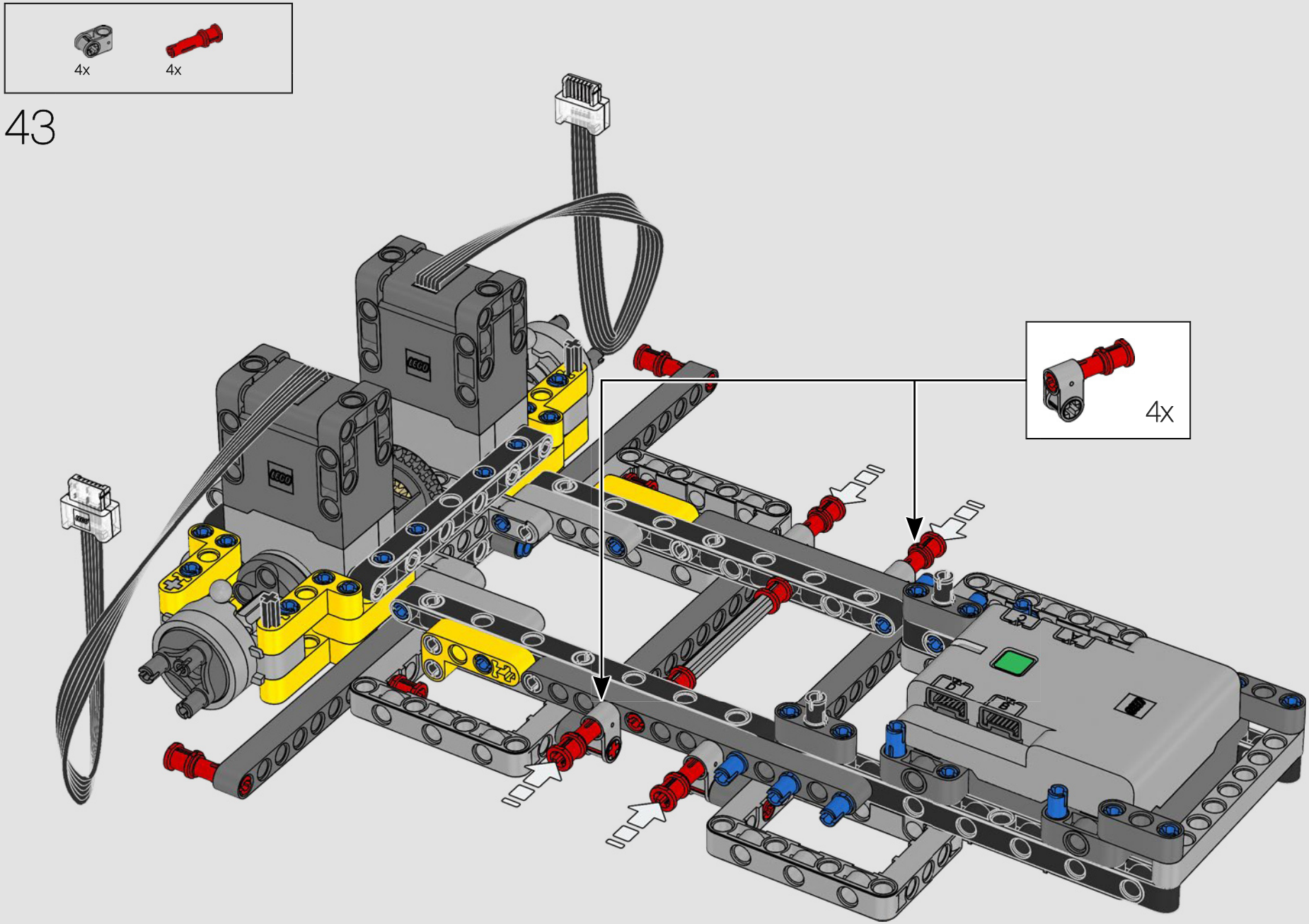
4x
4x
43
4x

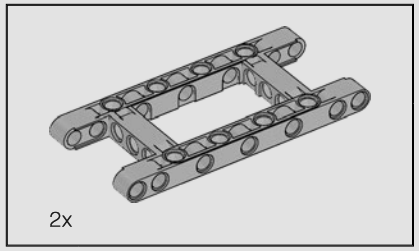

44

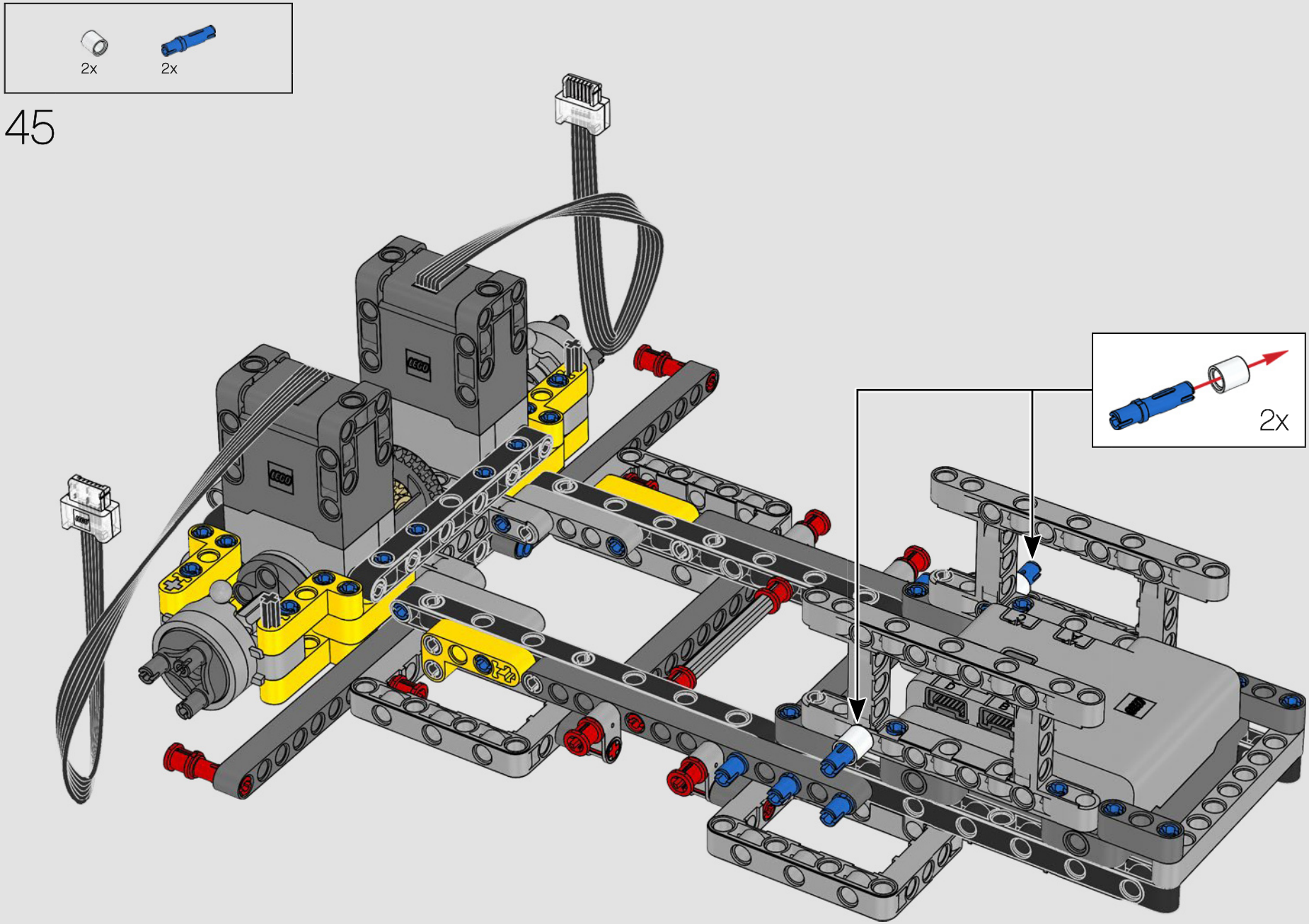
2x
2x
45
2x

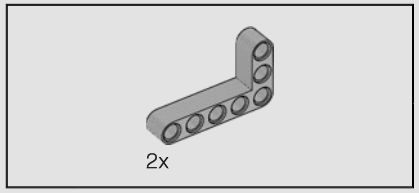

46

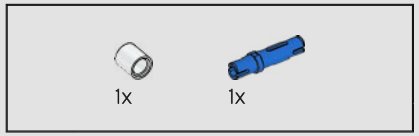

47

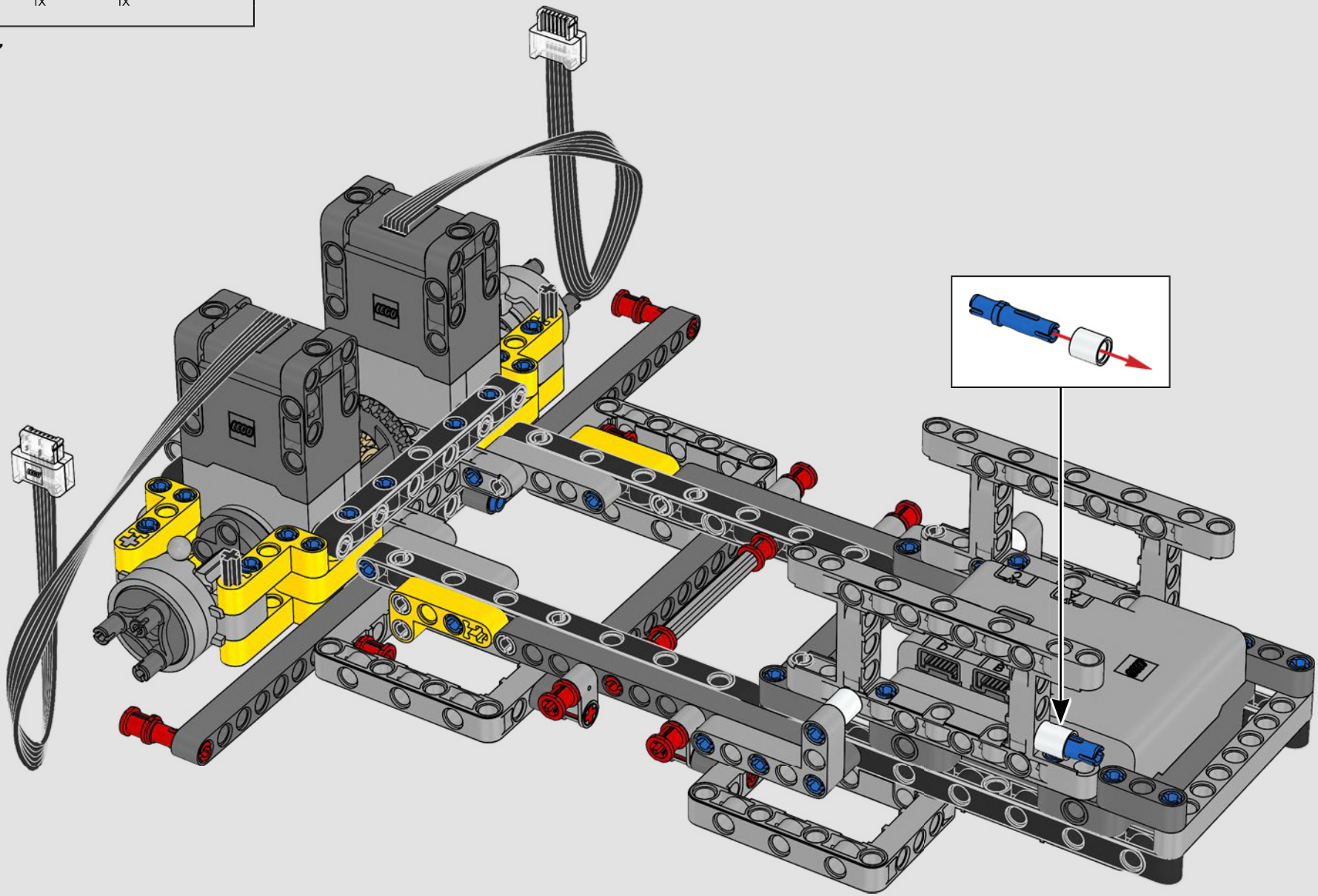

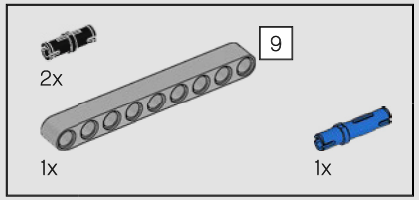

48

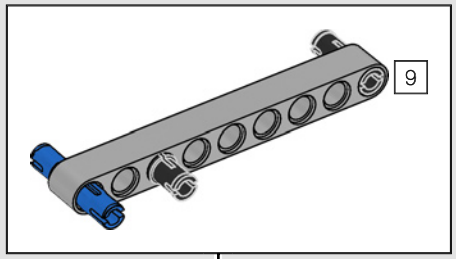

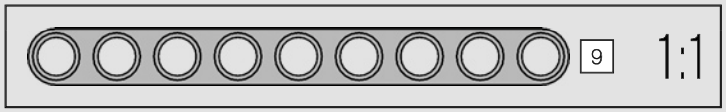

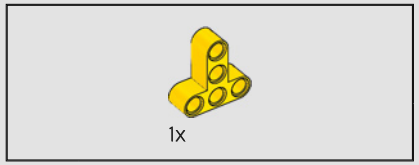

49

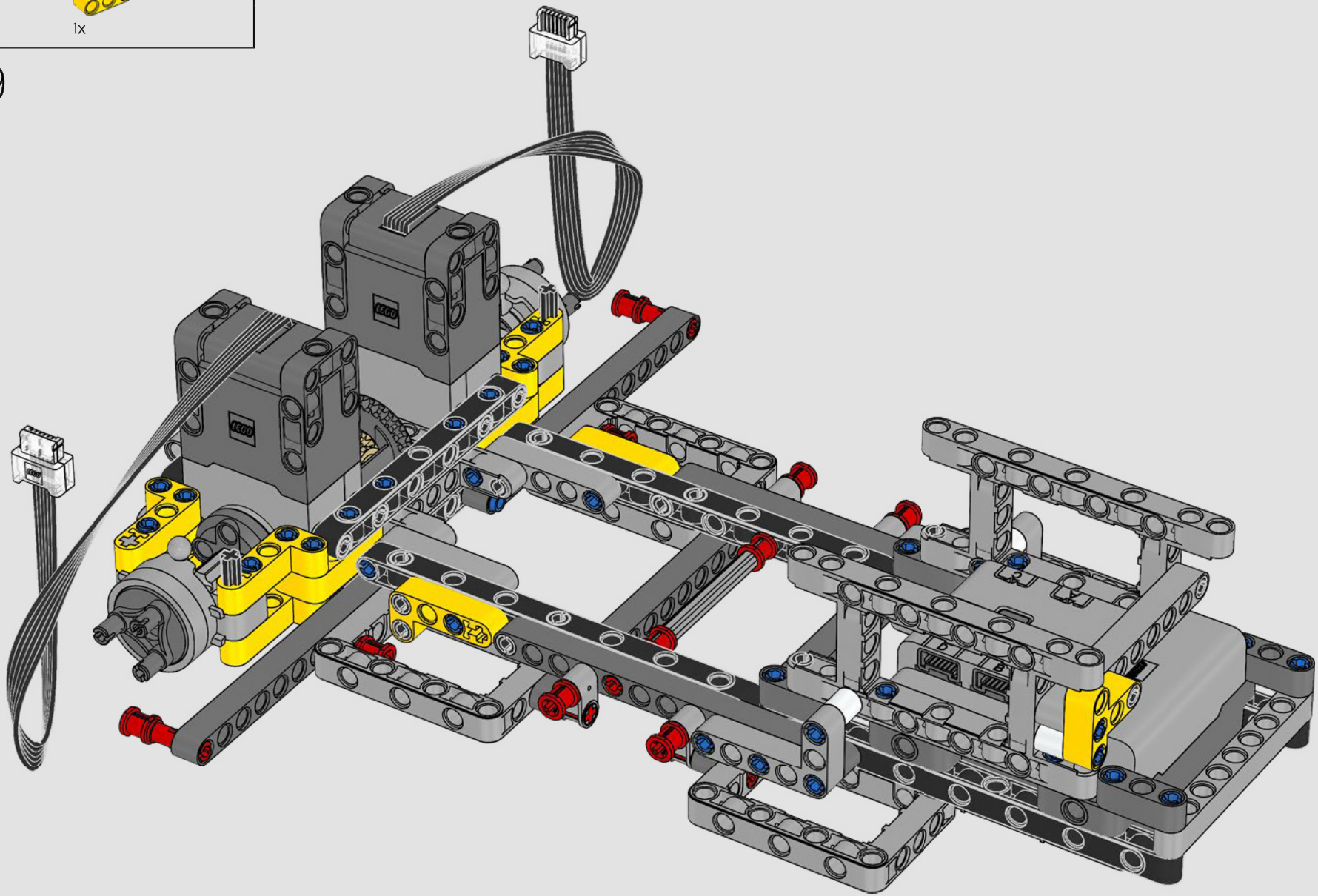

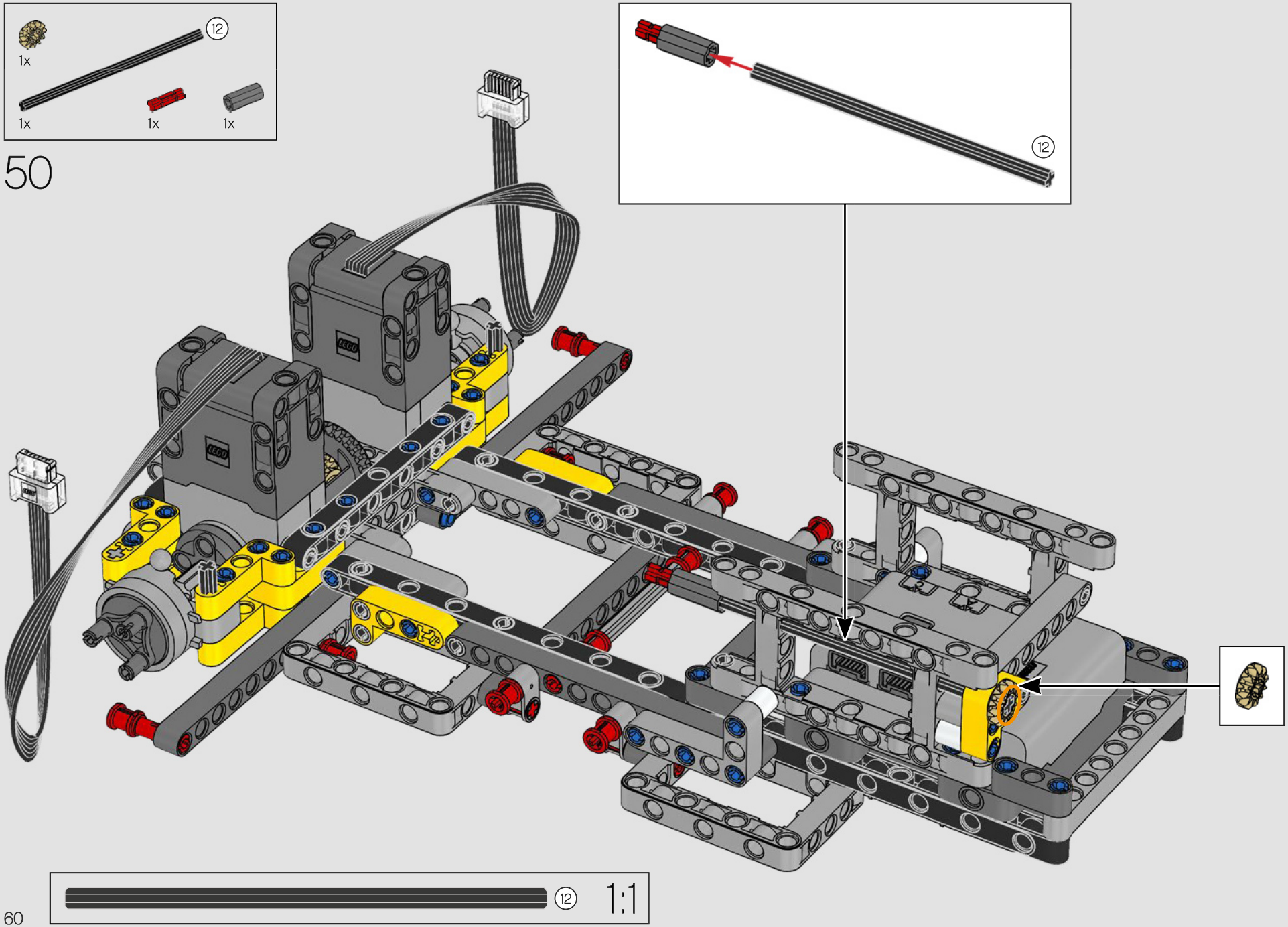
12
1x
1x
1x
1x
50
12
12
1:1

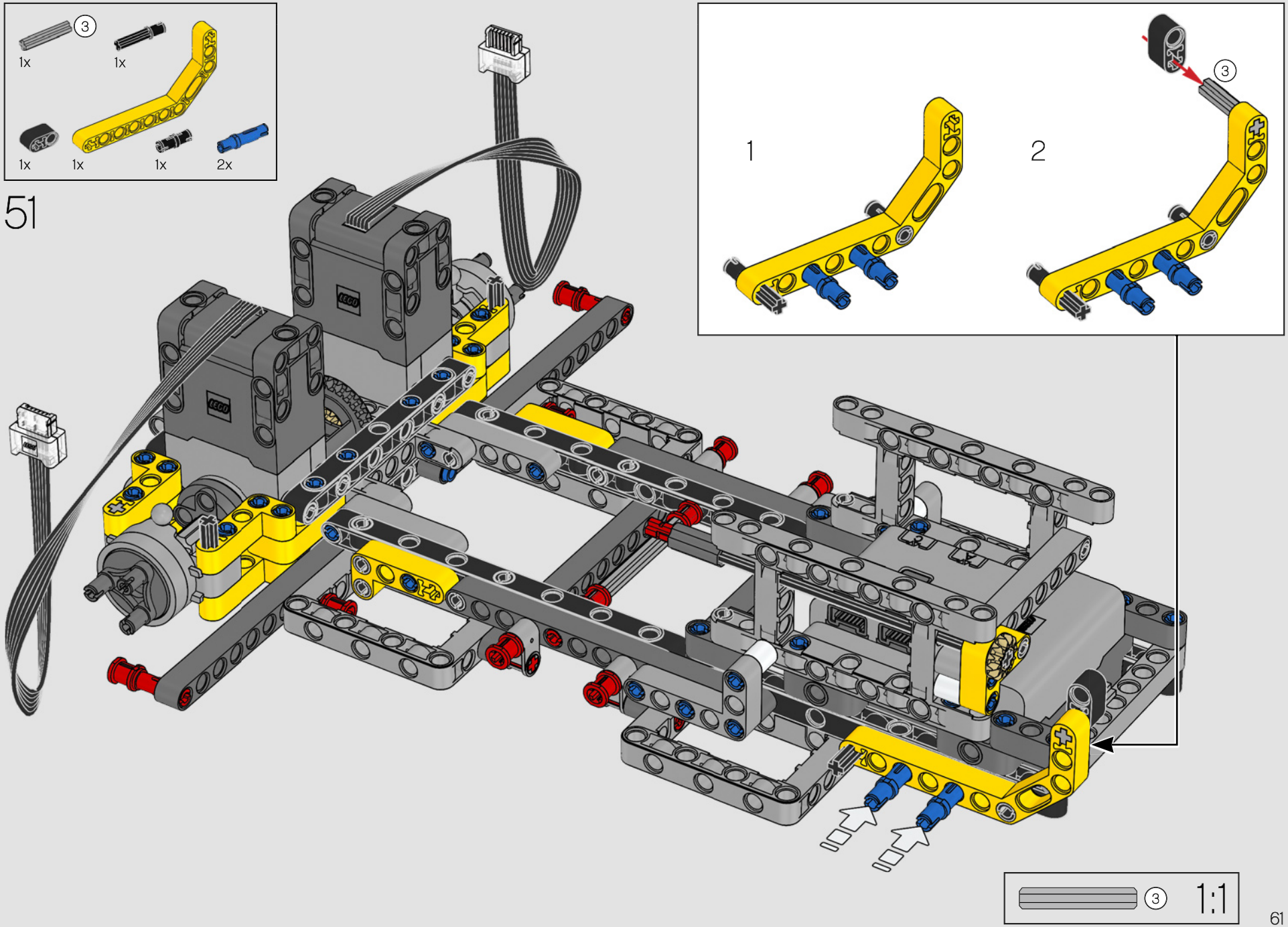
3
1x
1x
1x
1x
1x
2x
51
1
2
3
3
1:1

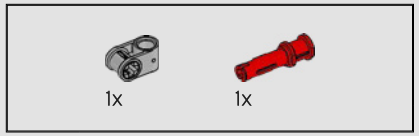

52

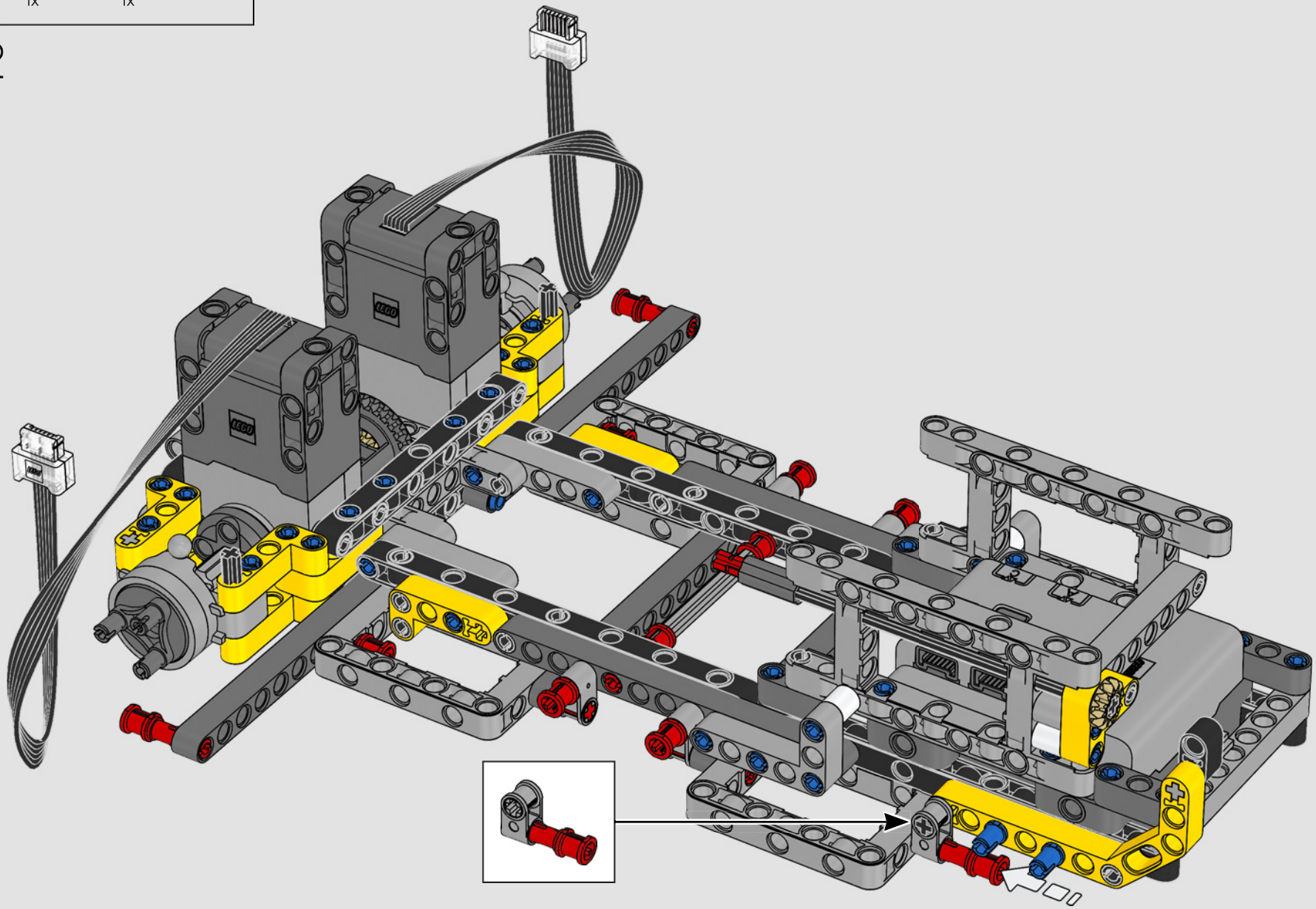

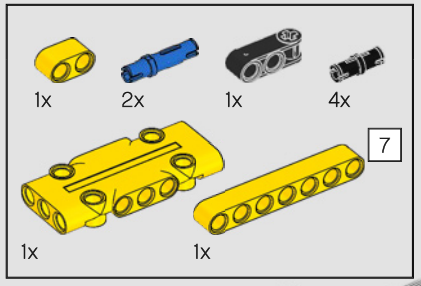

53

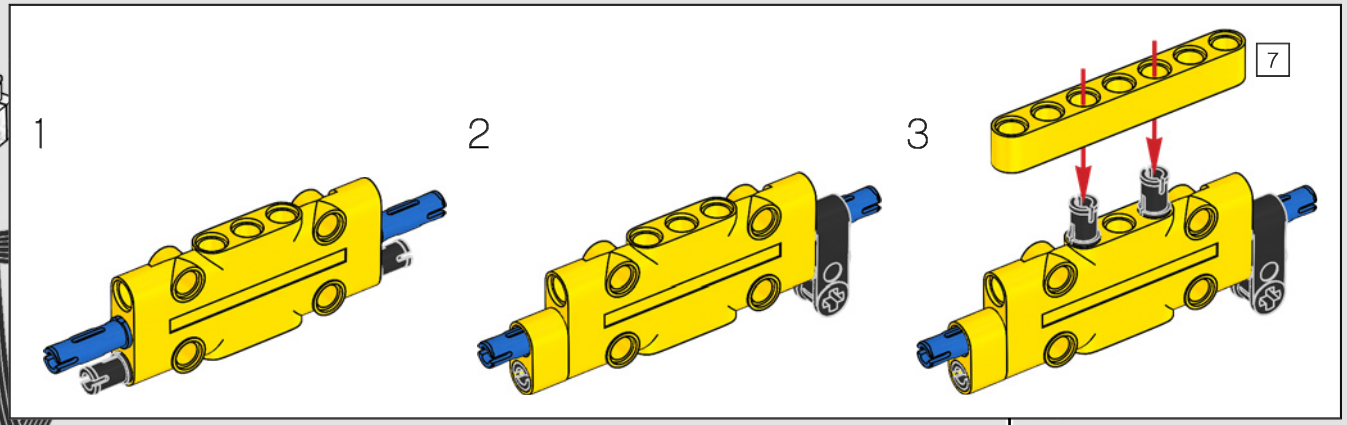

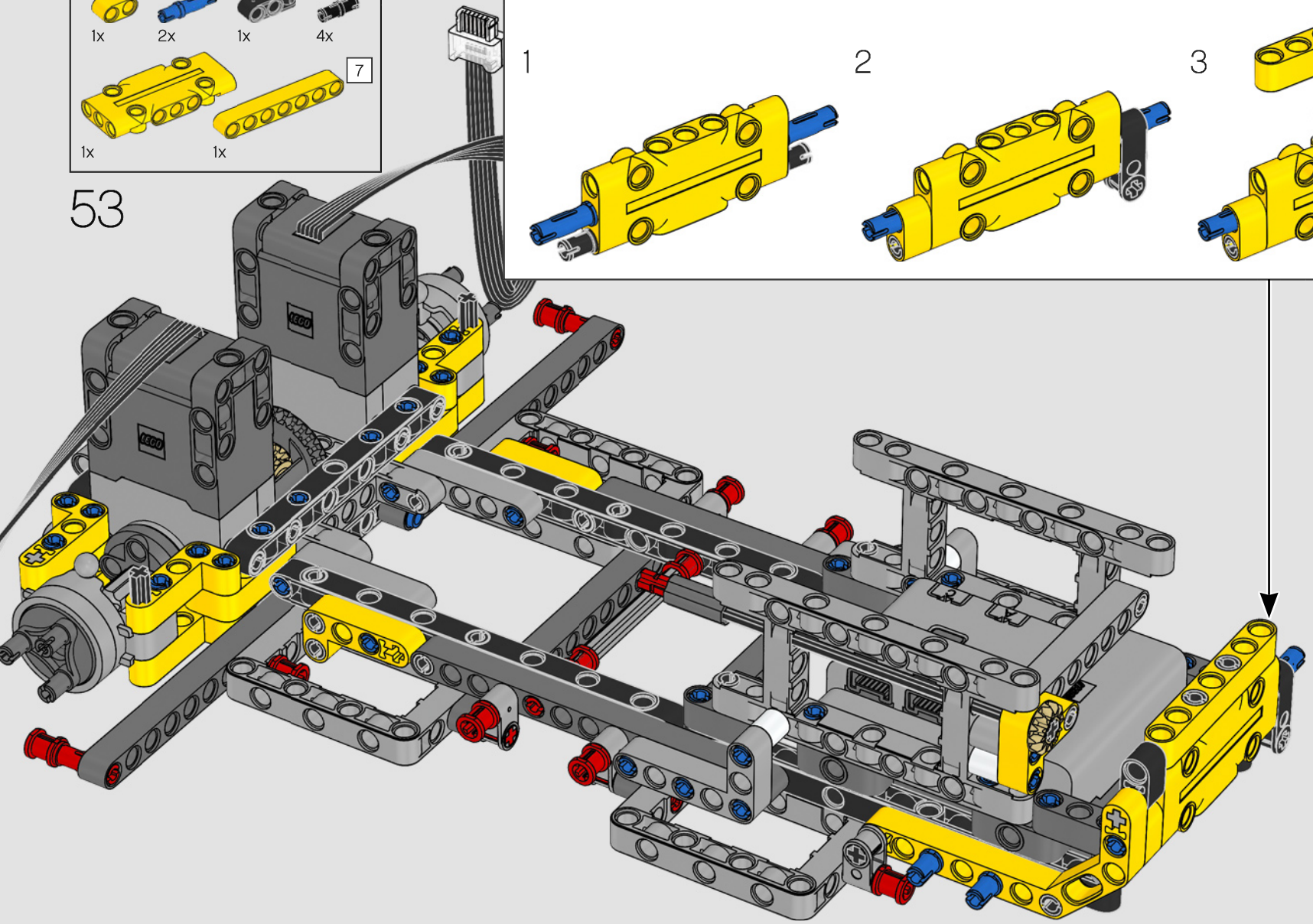

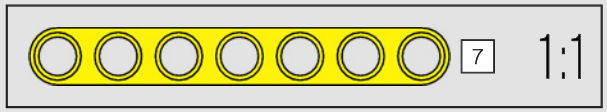

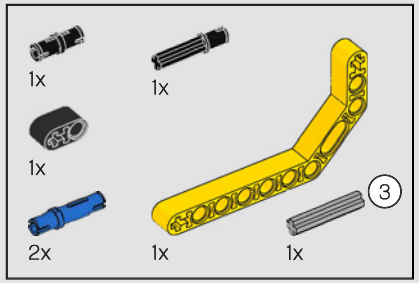

54

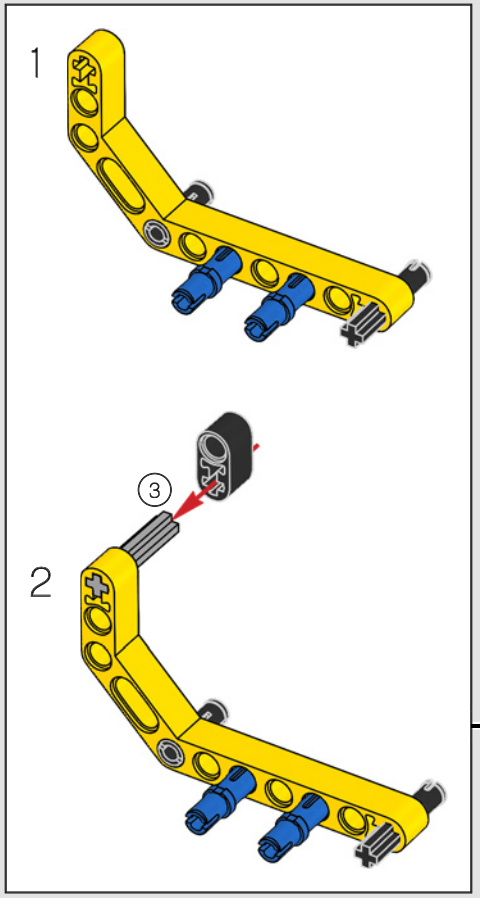

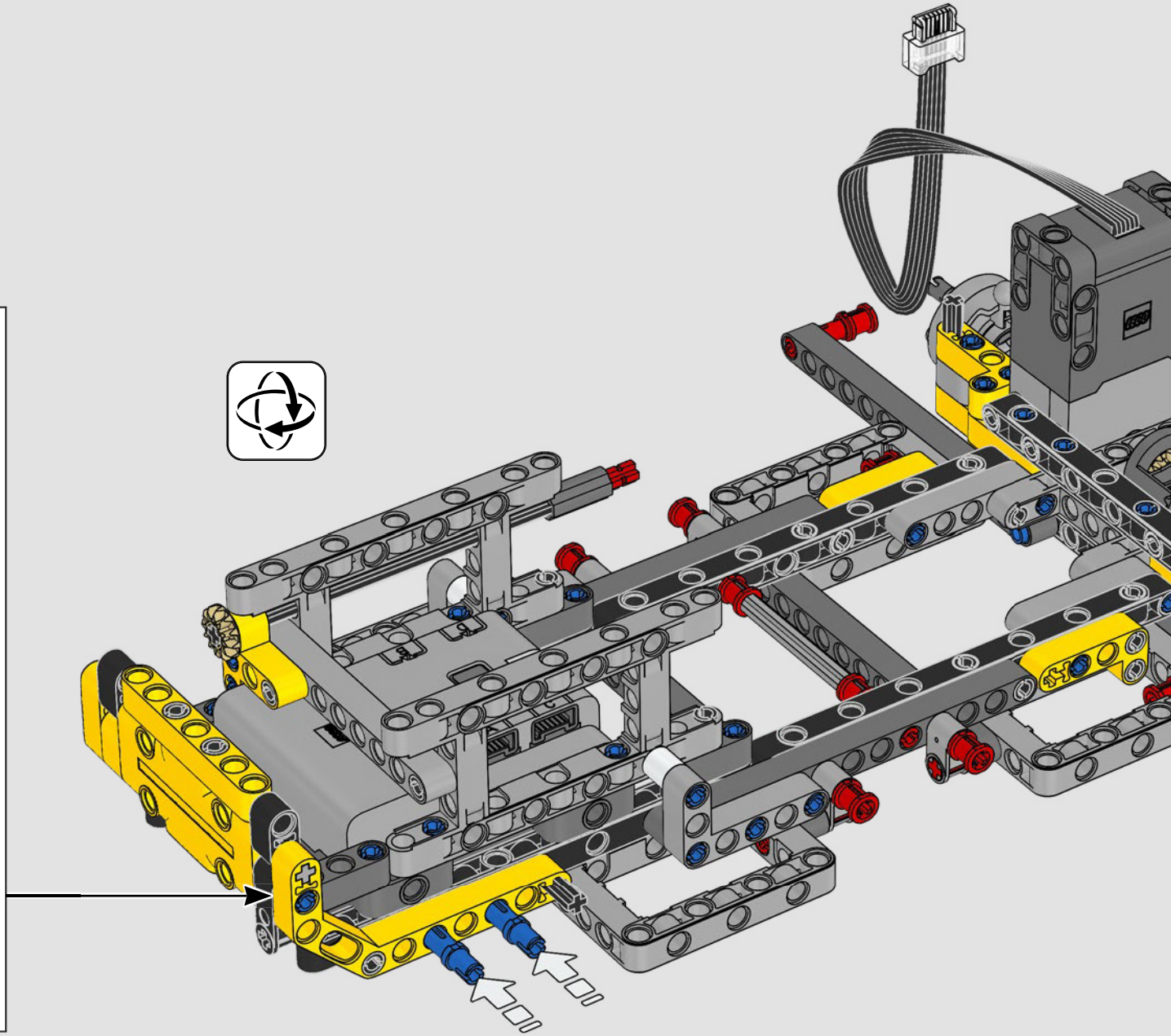

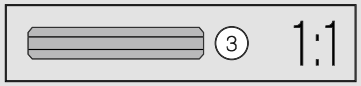

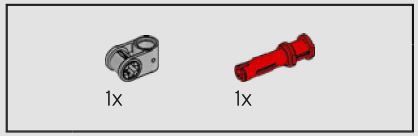

55

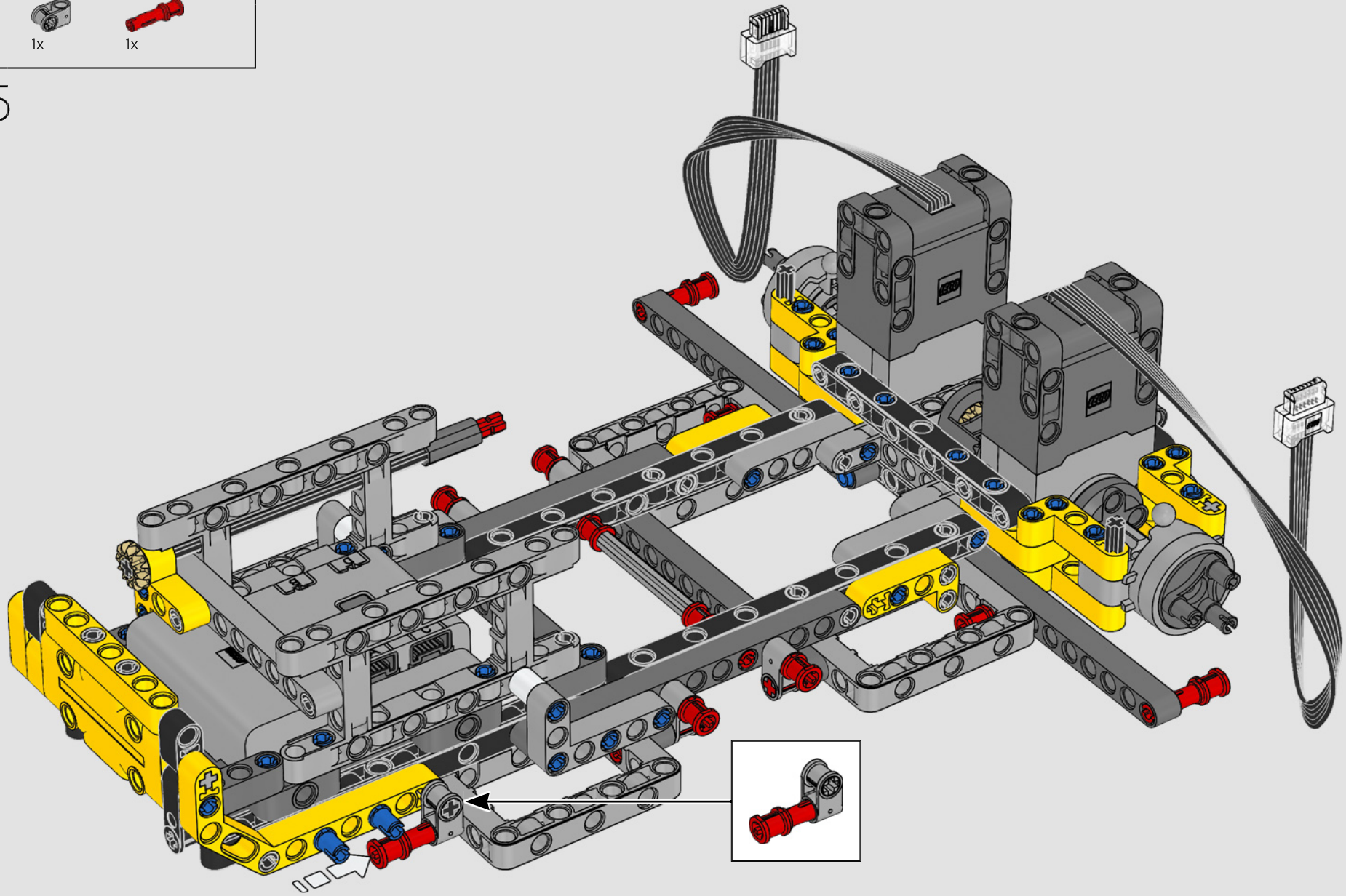

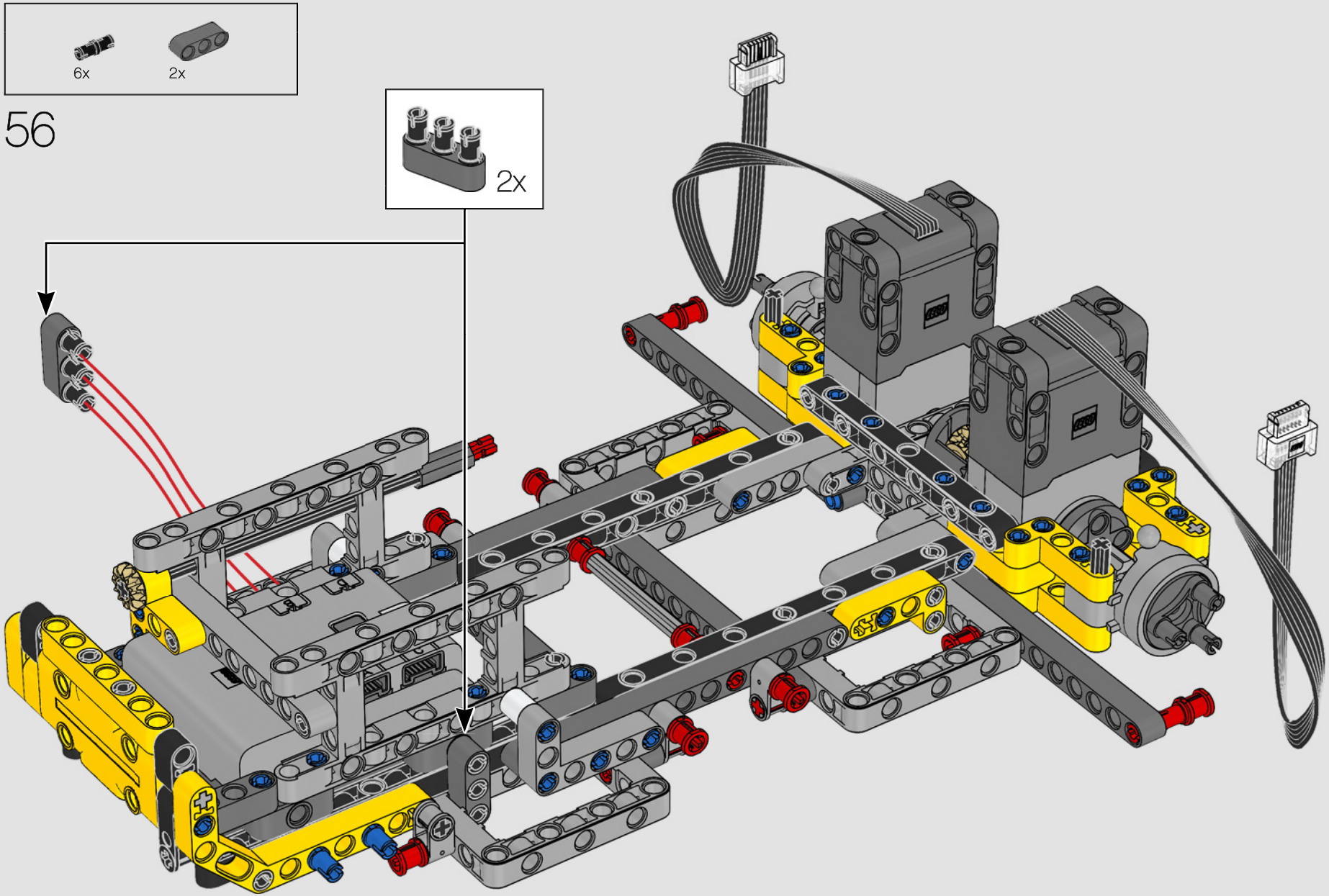
6x
2x
56
2x

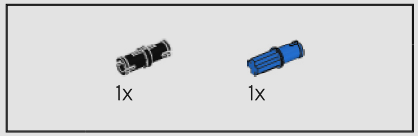

57

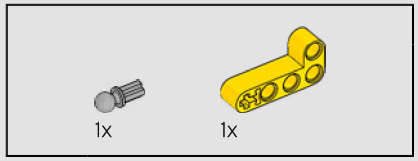

58

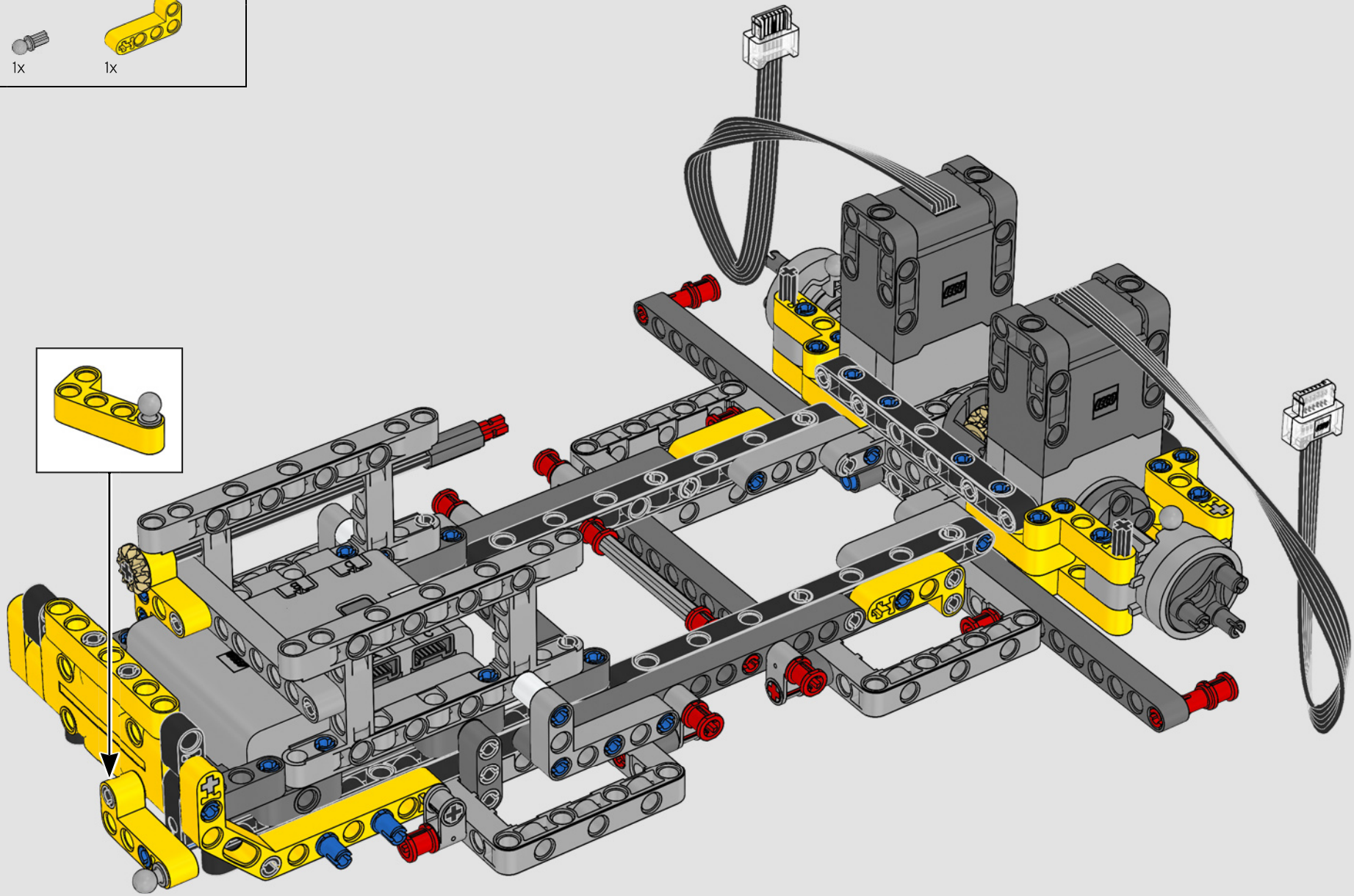

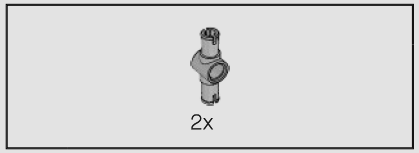

59

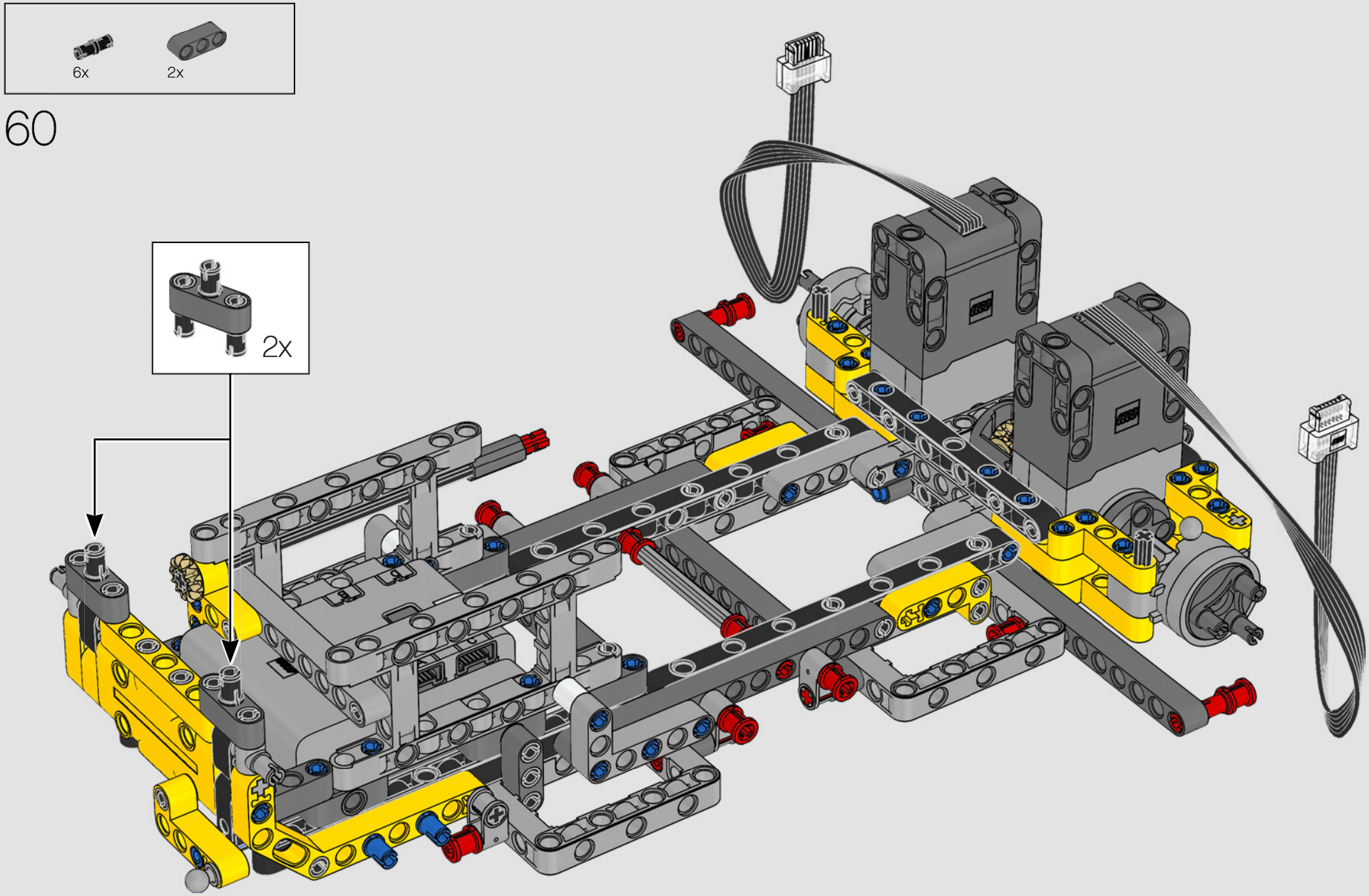
6x
2x
60
2x

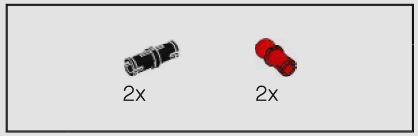

61

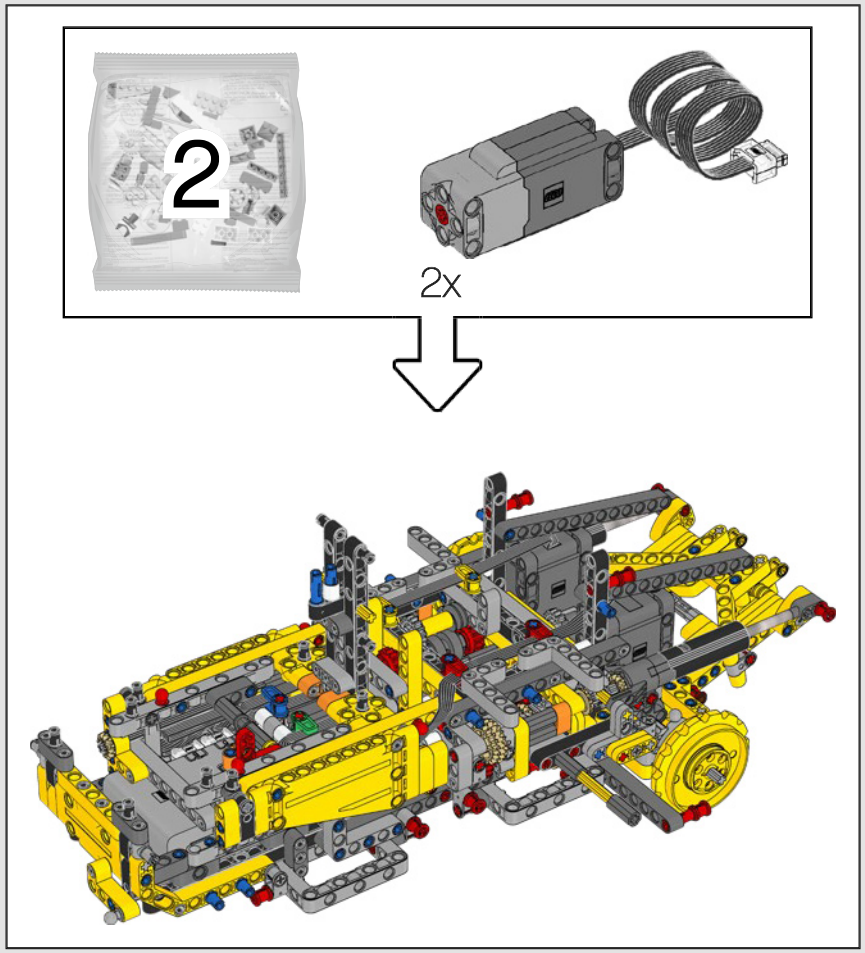
2
2x

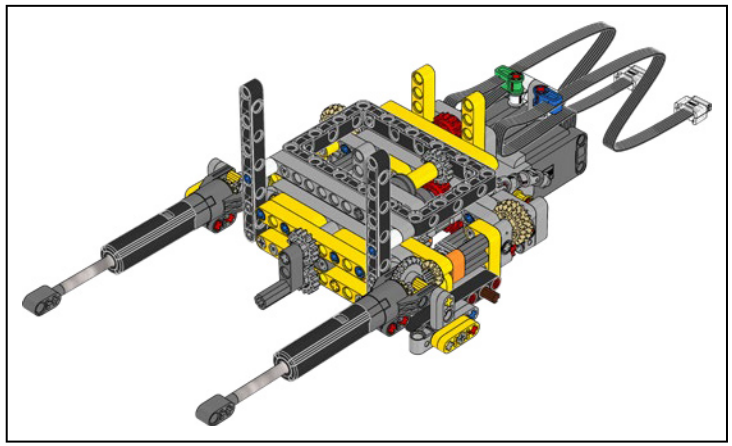

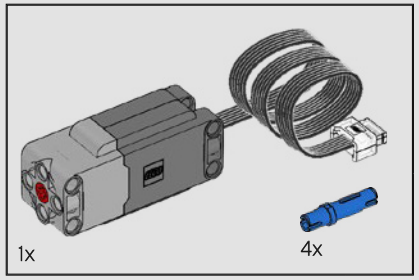

62

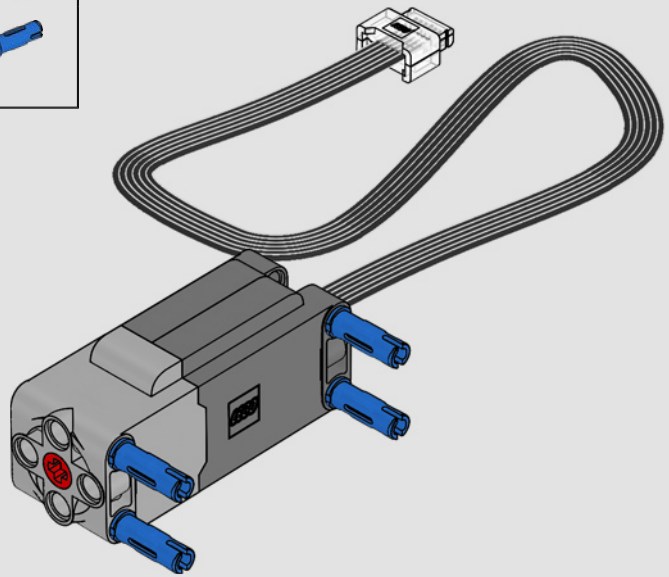

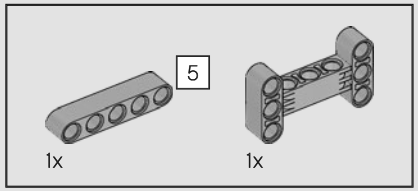

63

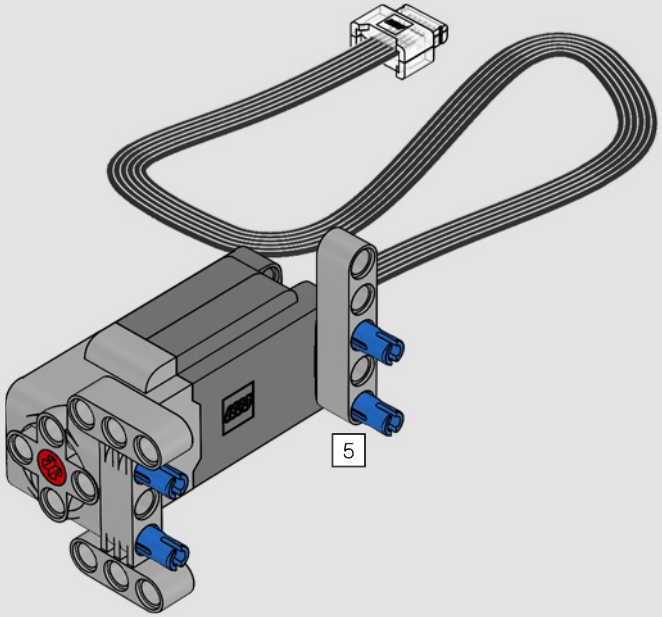

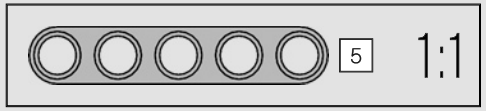

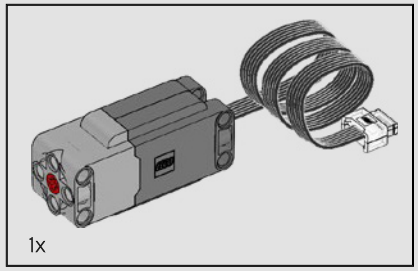

64

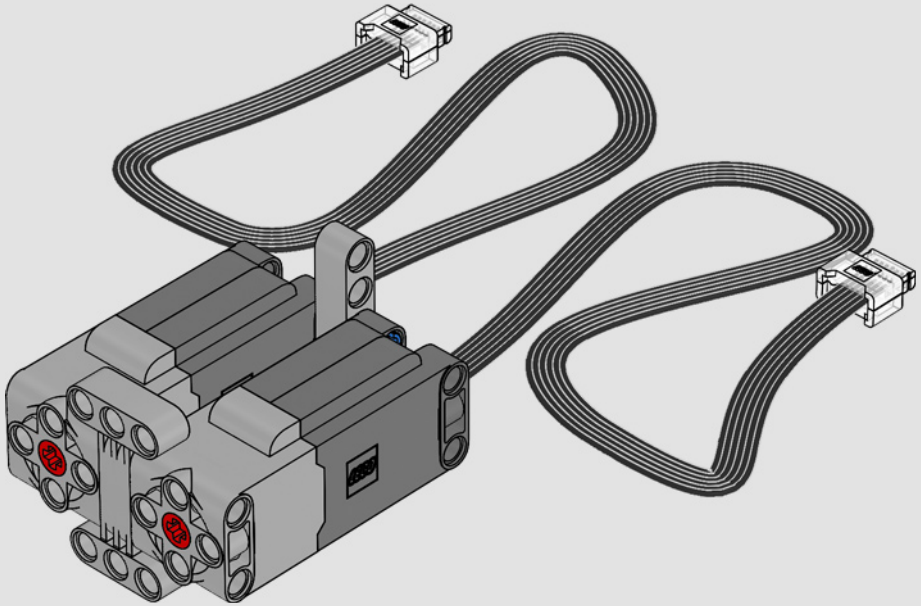

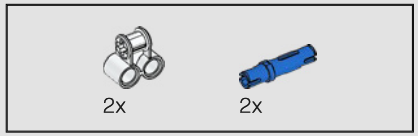

65

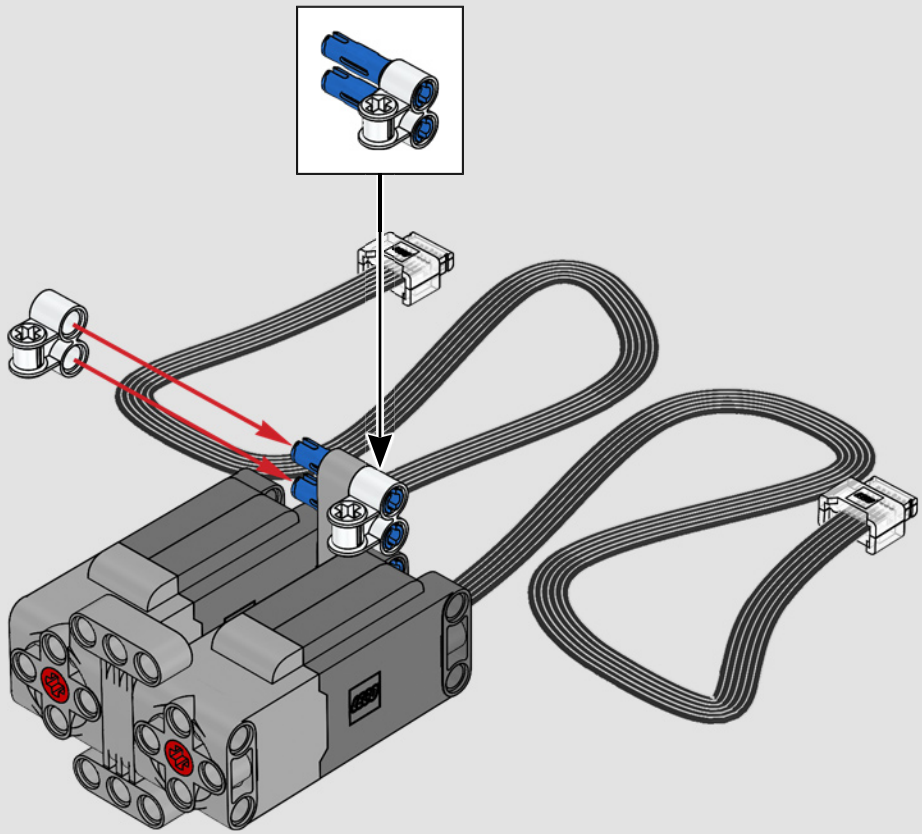

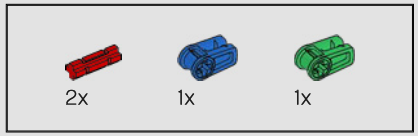

66

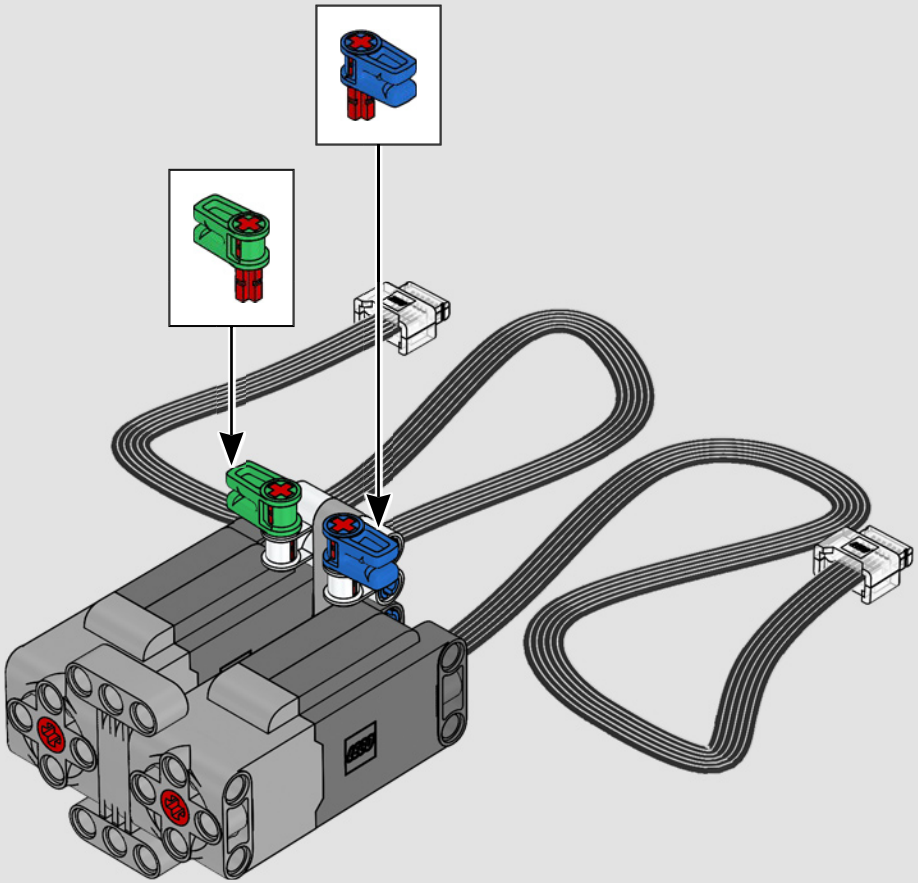

67

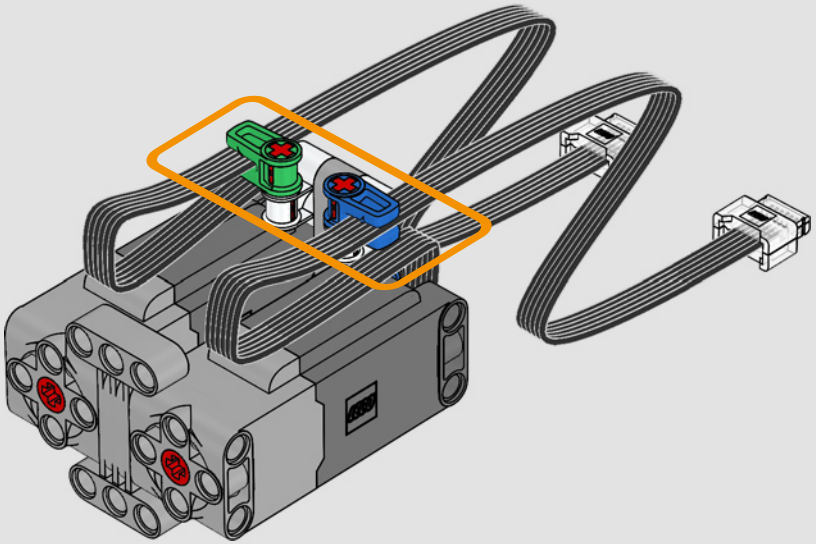

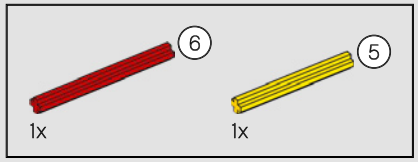

68

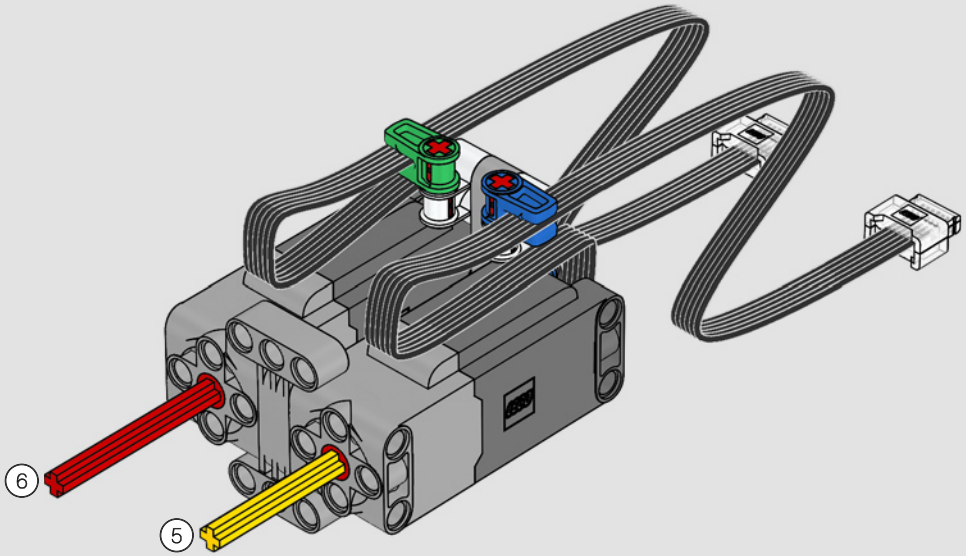

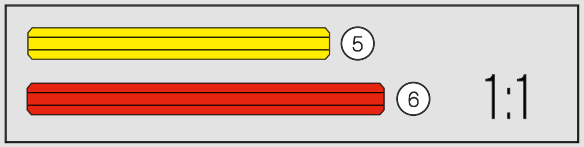

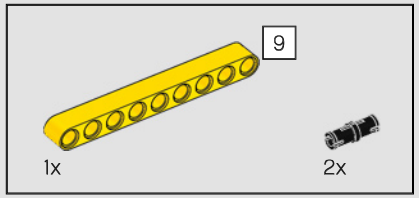

69

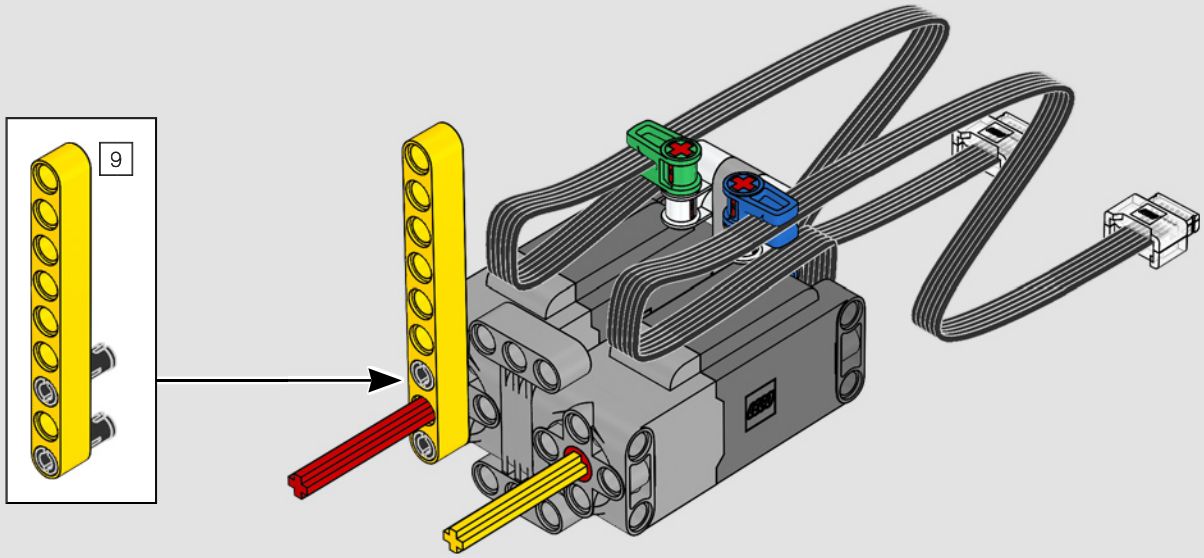

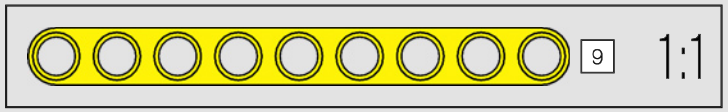

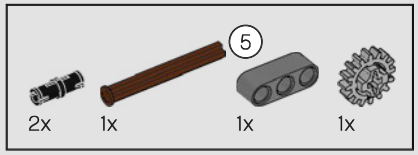

70

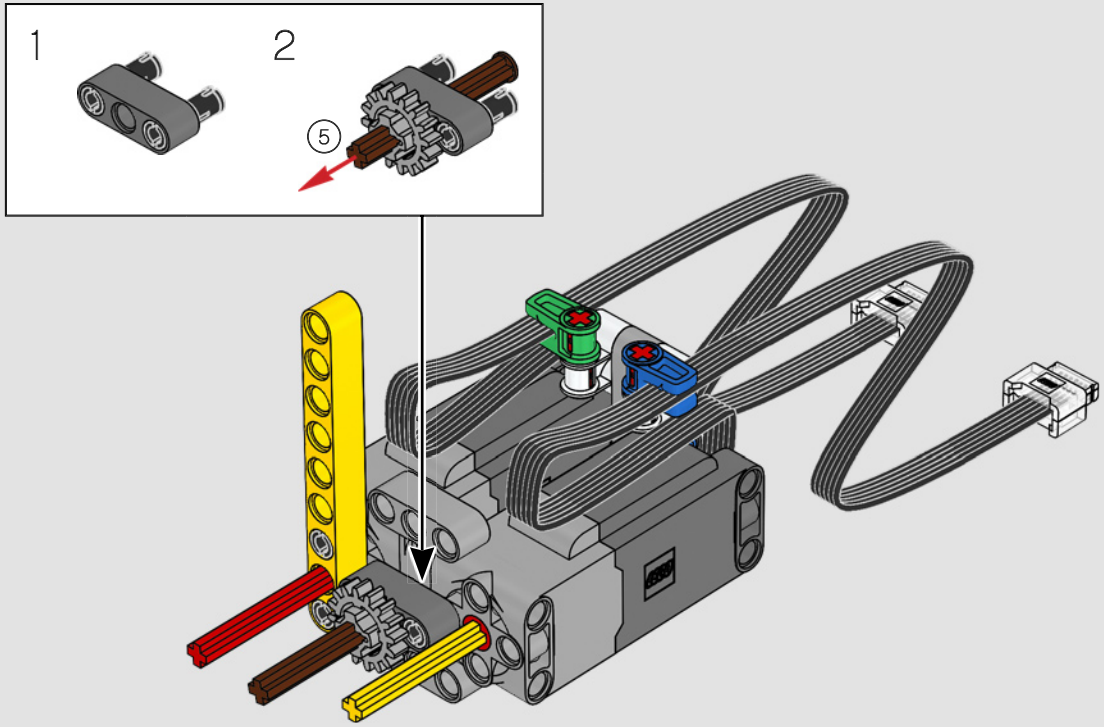

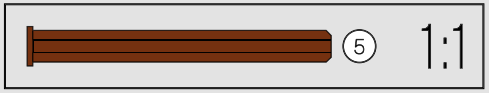

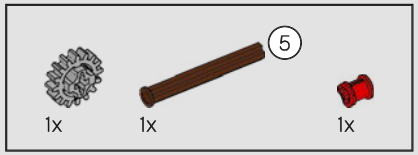

71

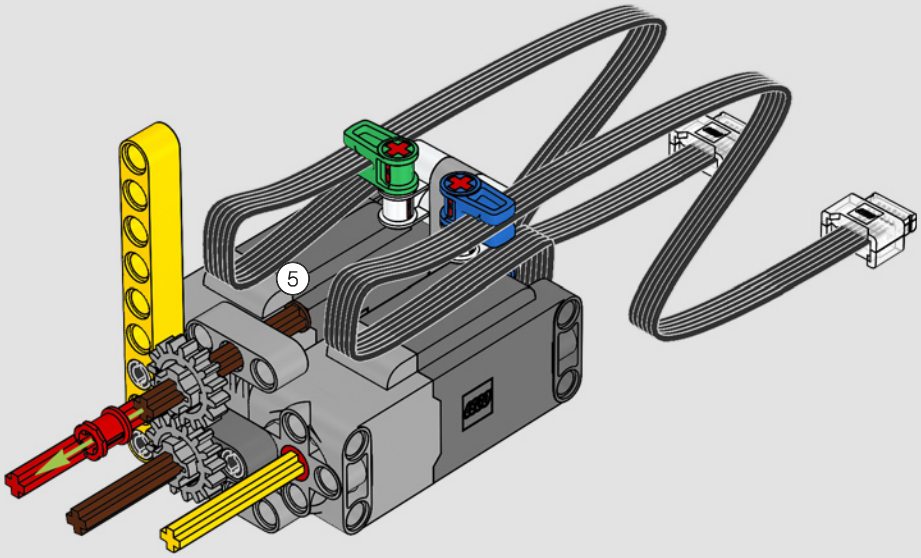

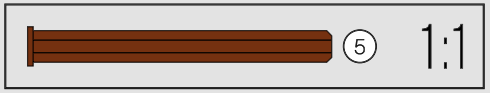

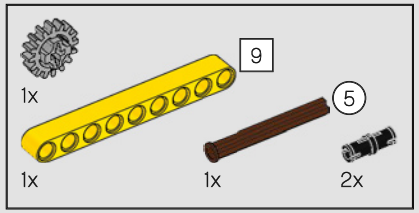

72

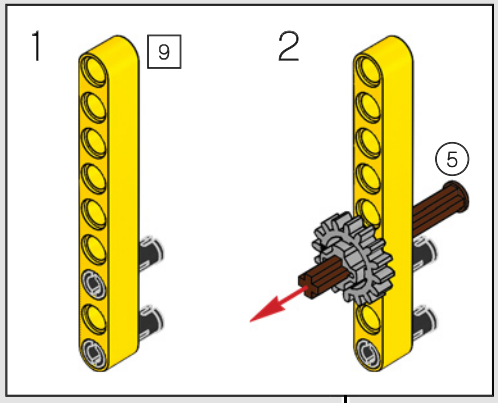

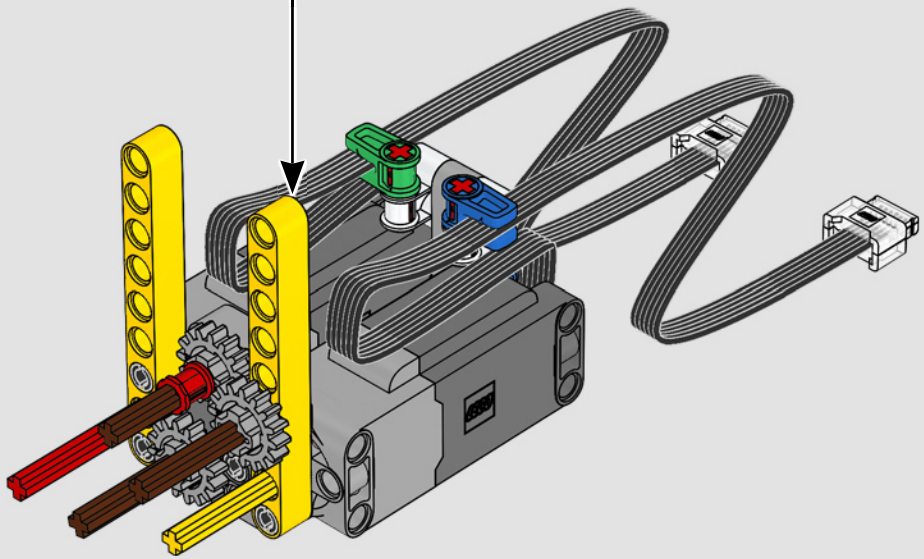

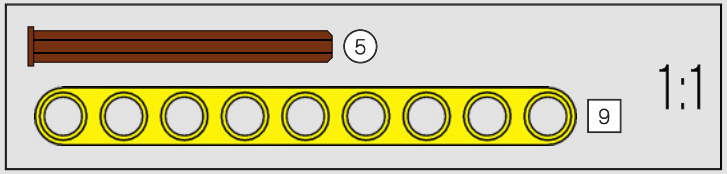

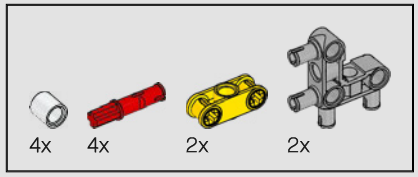

73

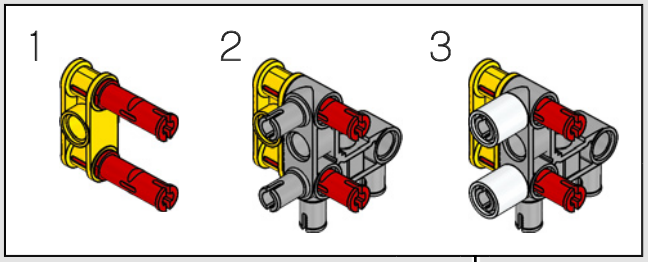

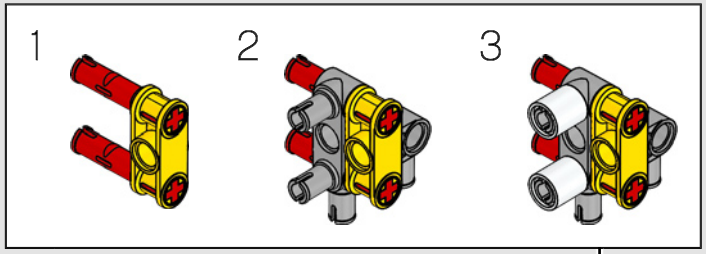

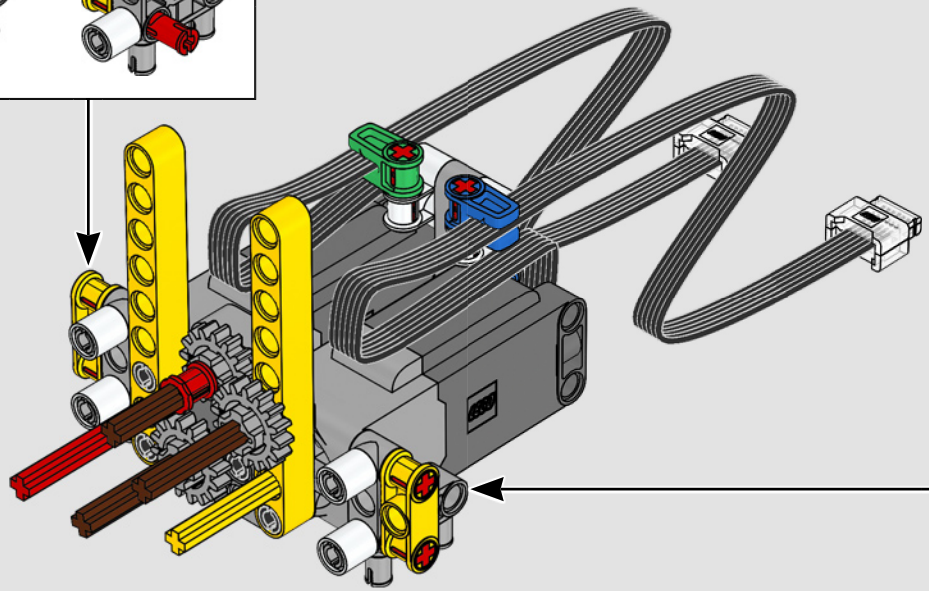

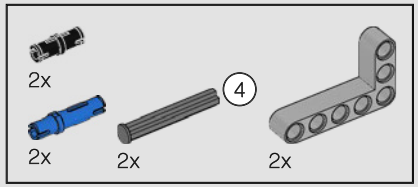

74

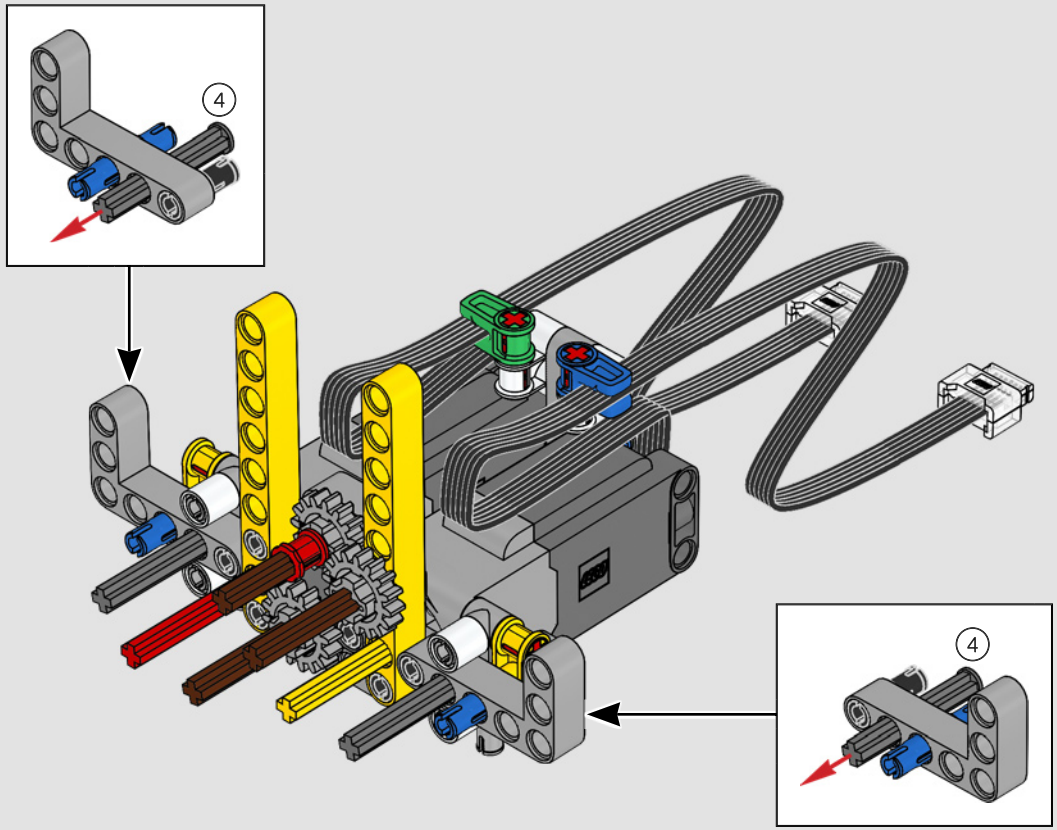

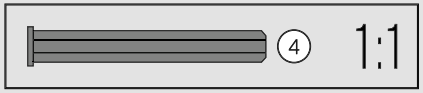

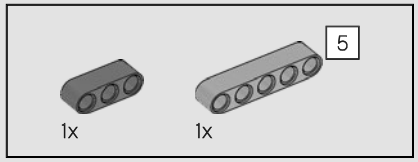

75

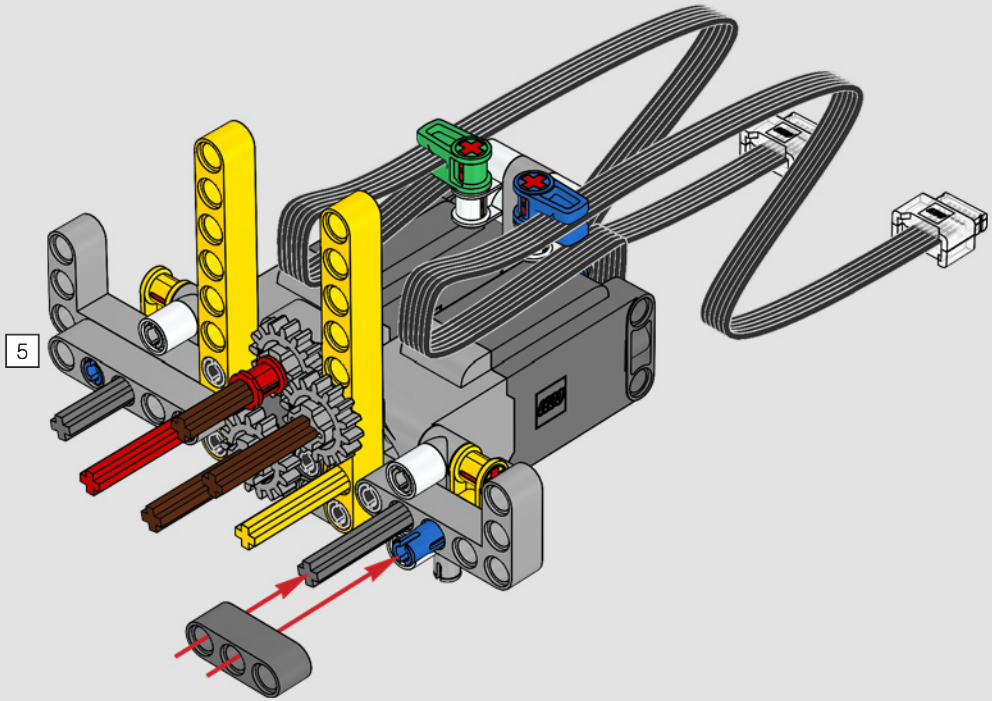

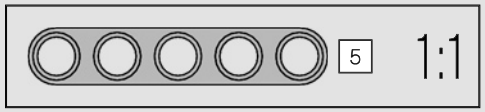

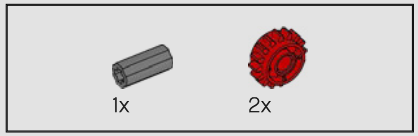

76

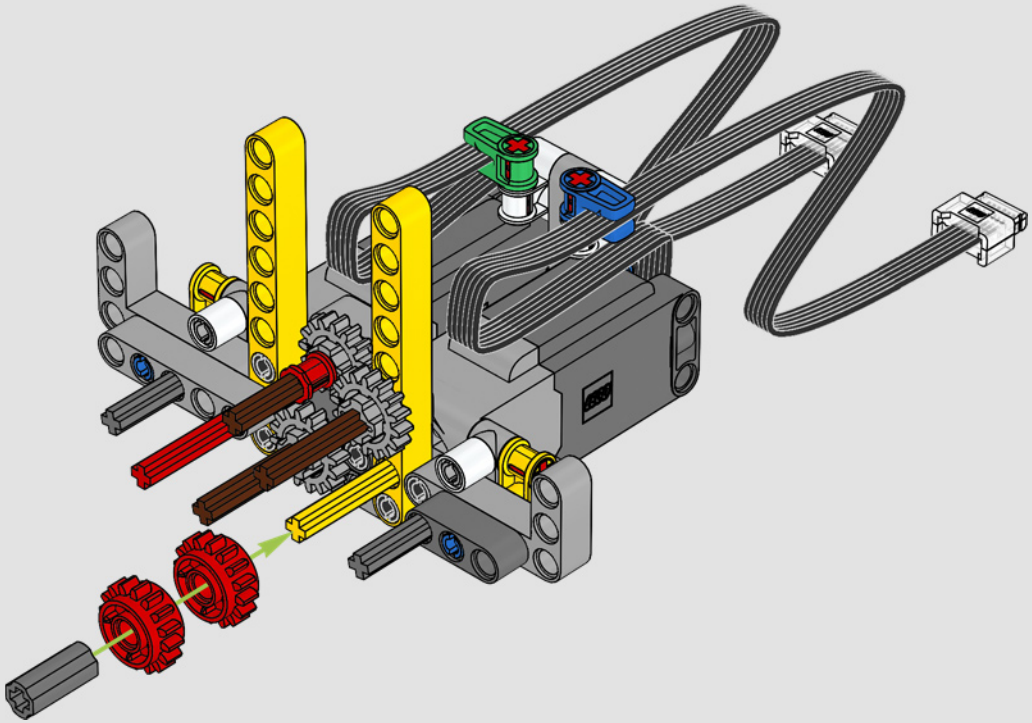

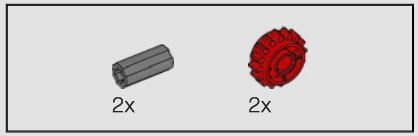

77

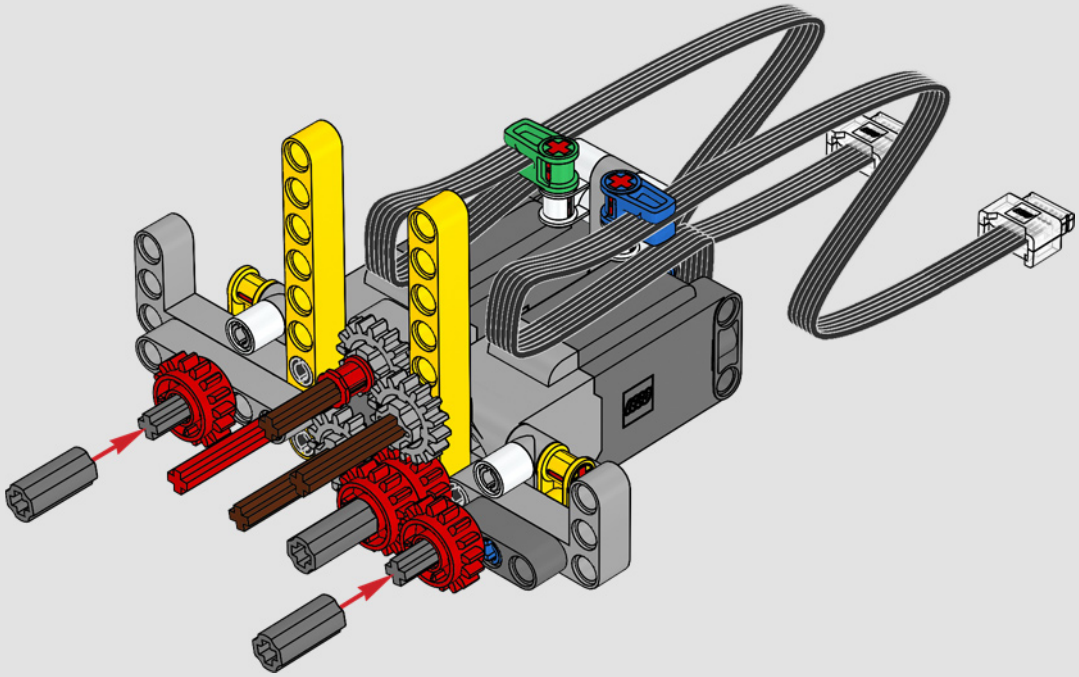

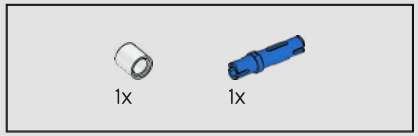

78

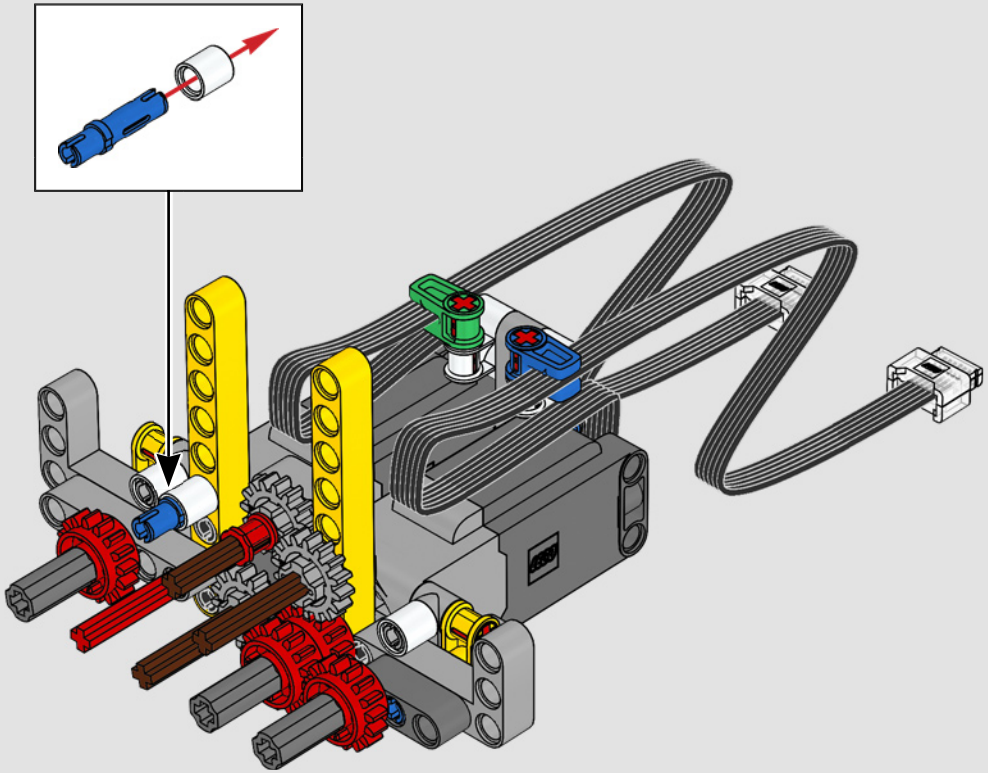

2x

79

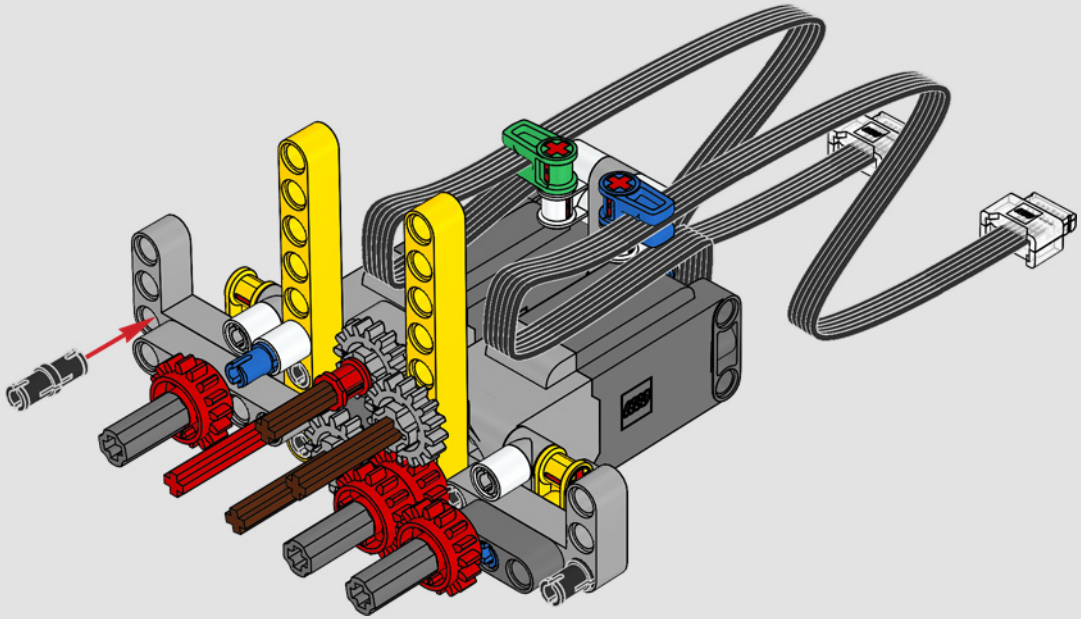

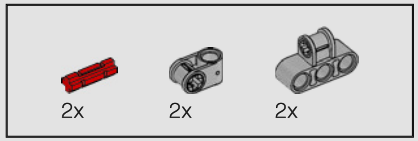

80

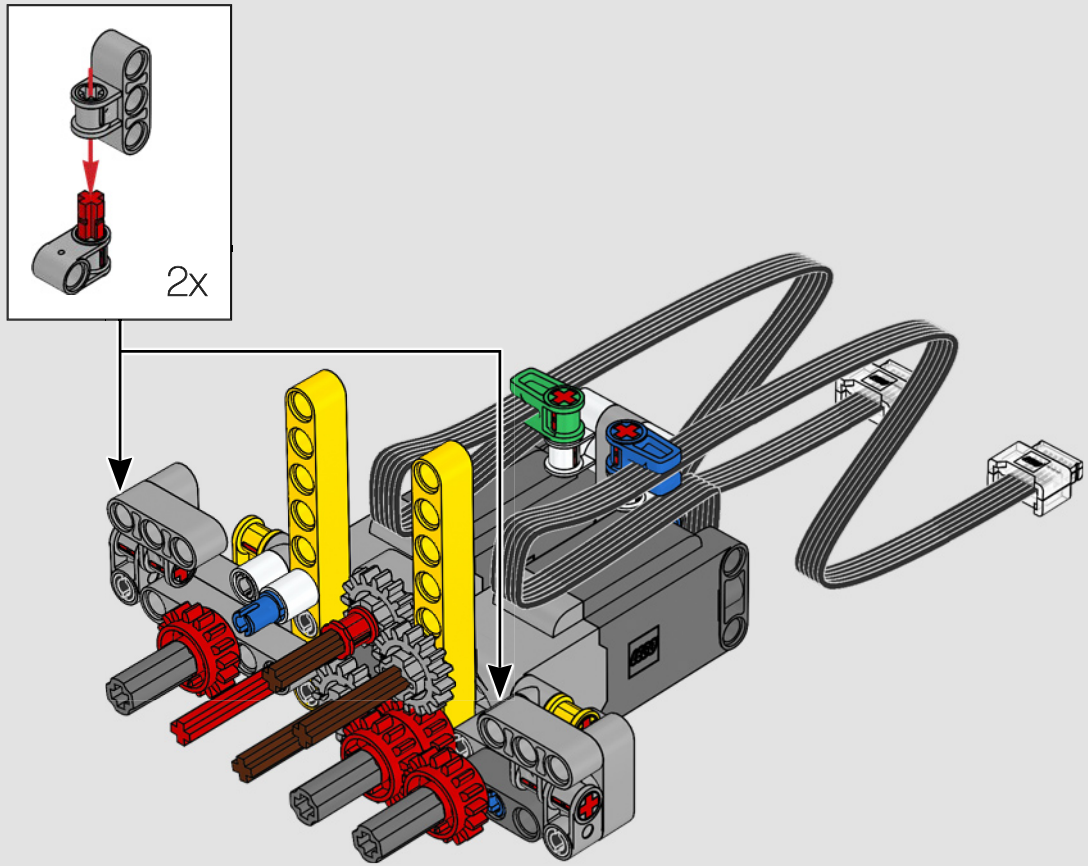

81

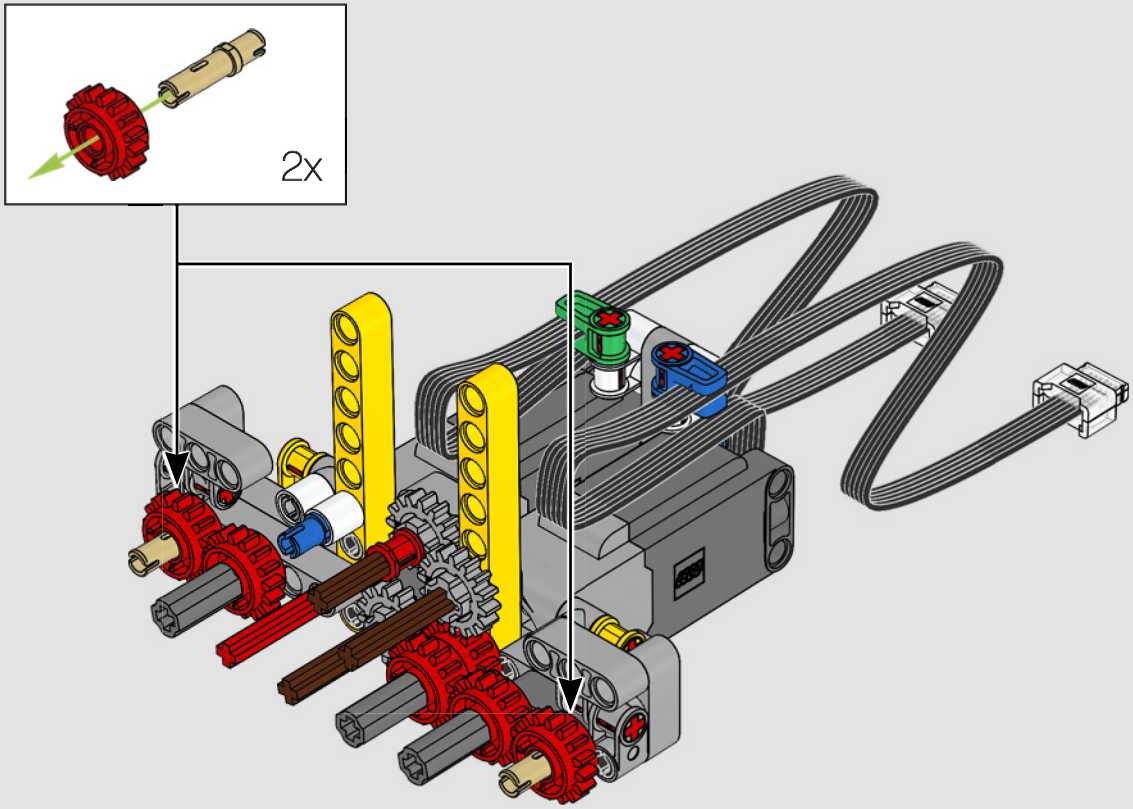

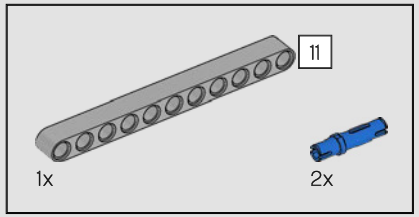

82

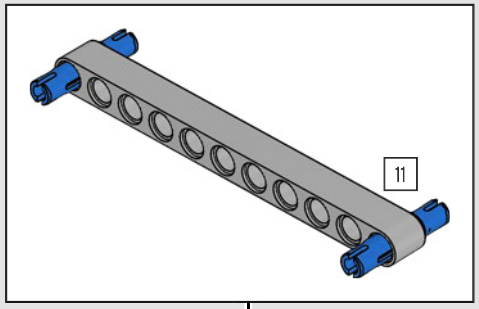

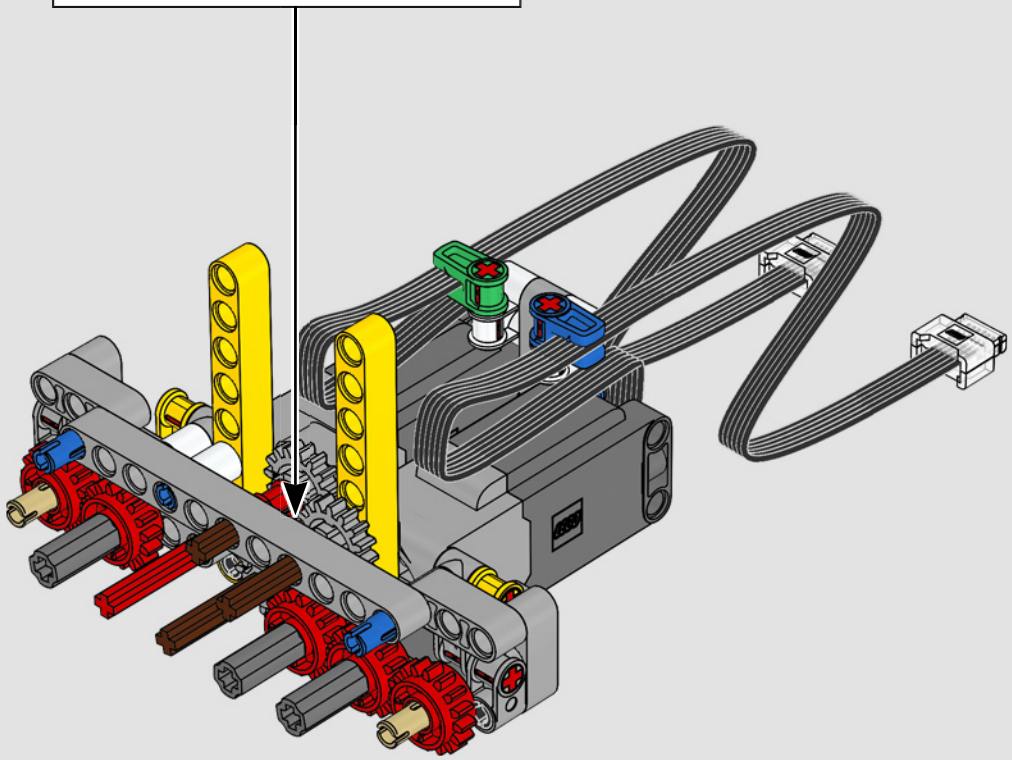

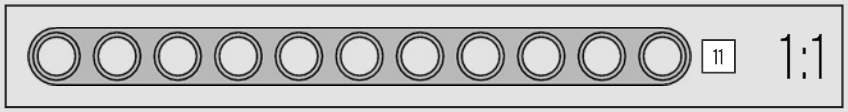

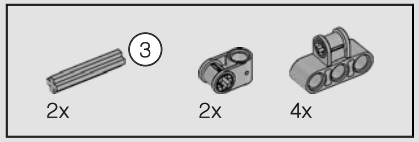

83

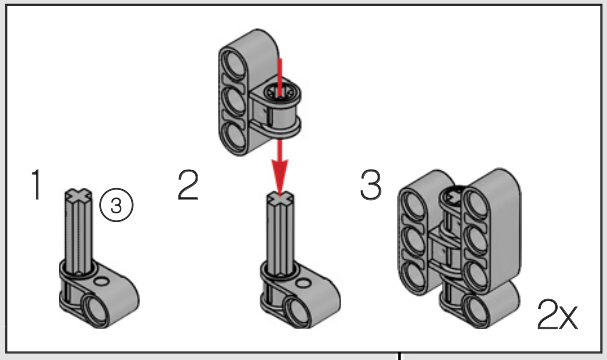

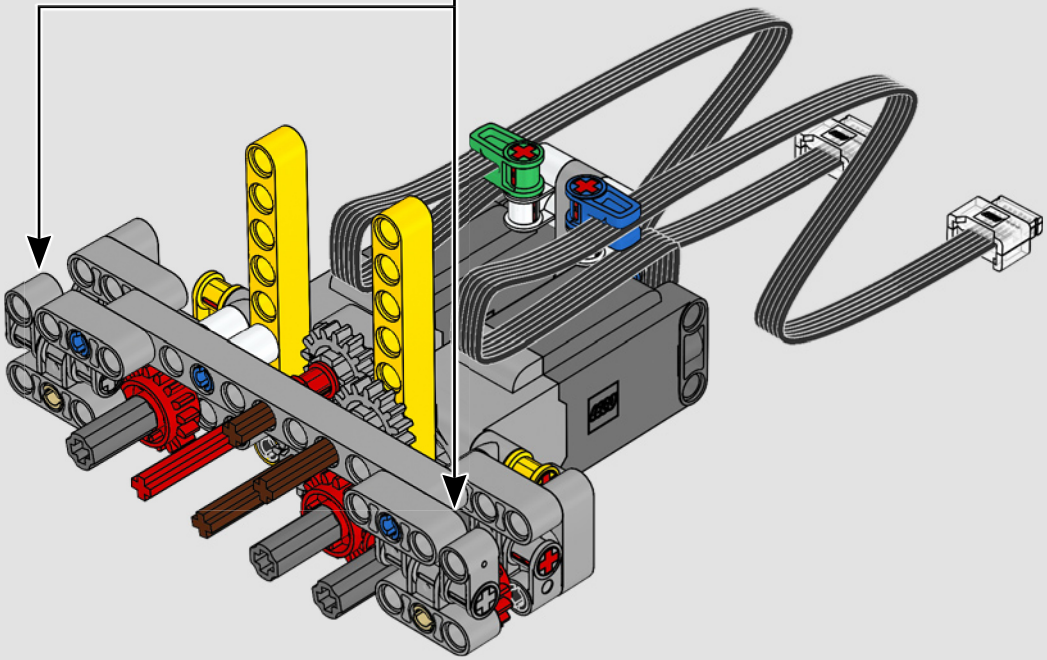

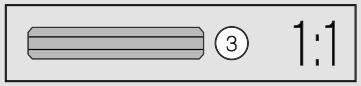

4x

84

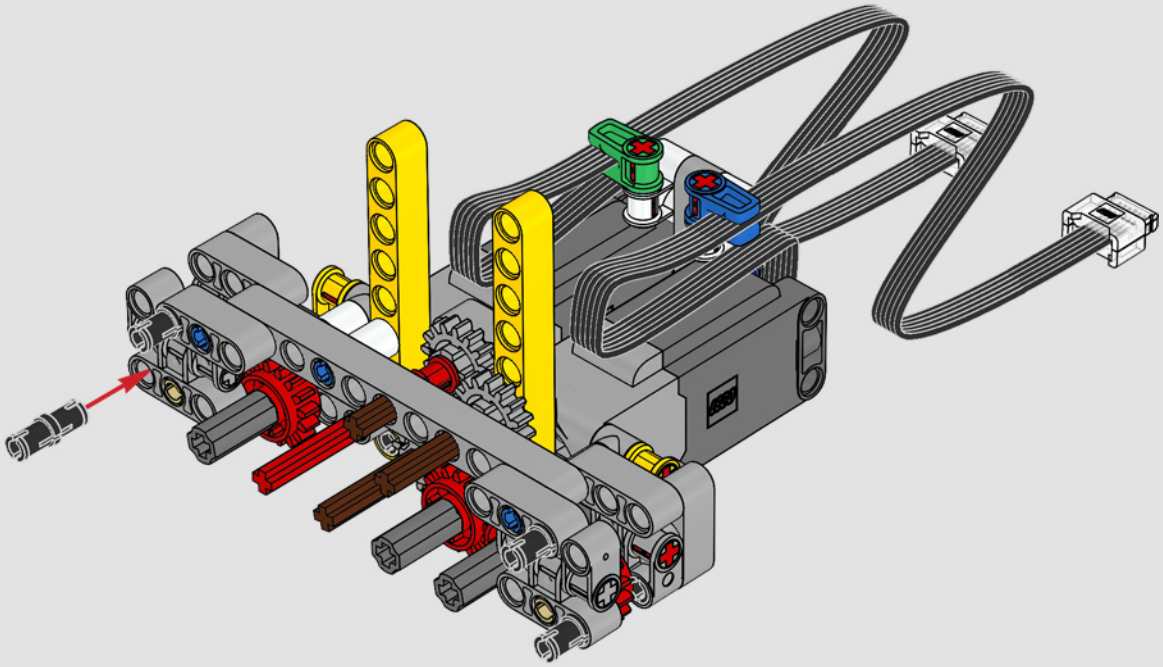

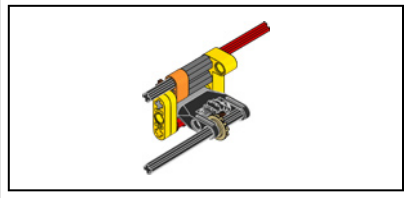

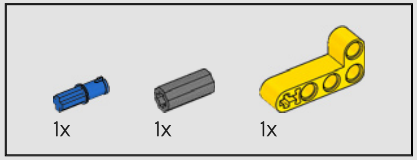

85

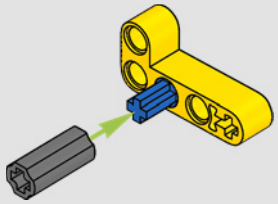

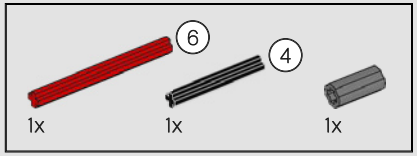

86

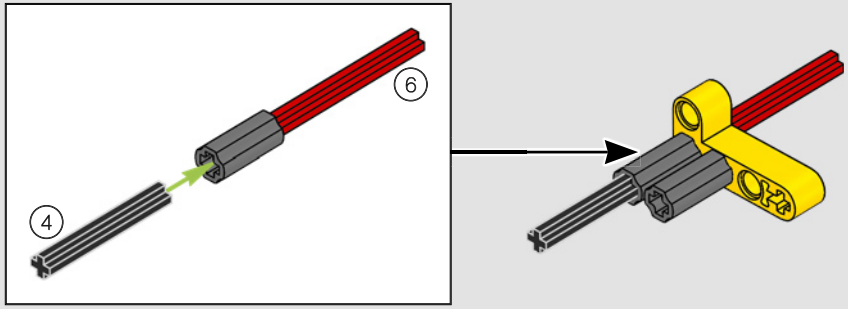

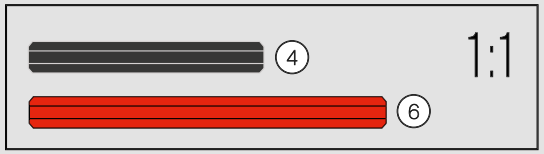

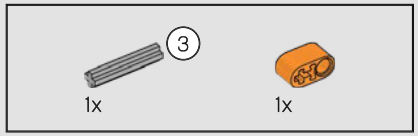

87

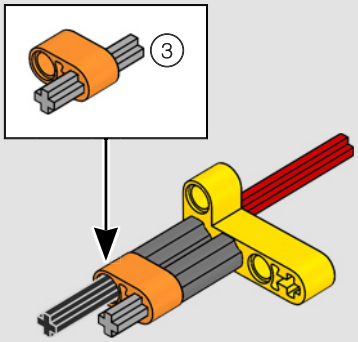

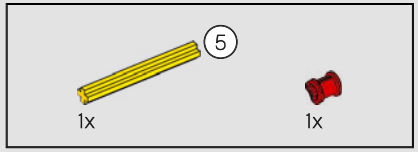

88

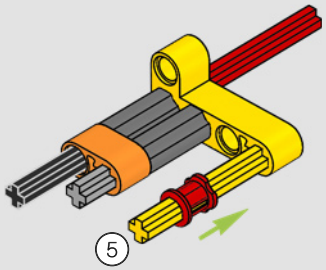

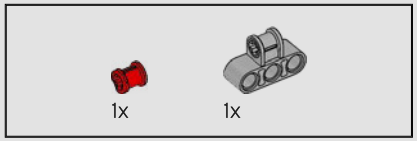

89

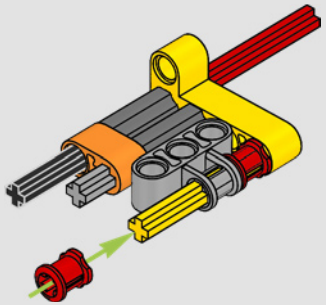

90

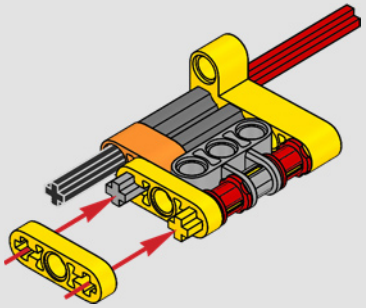

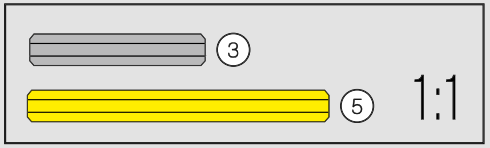

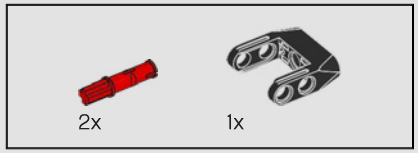

91

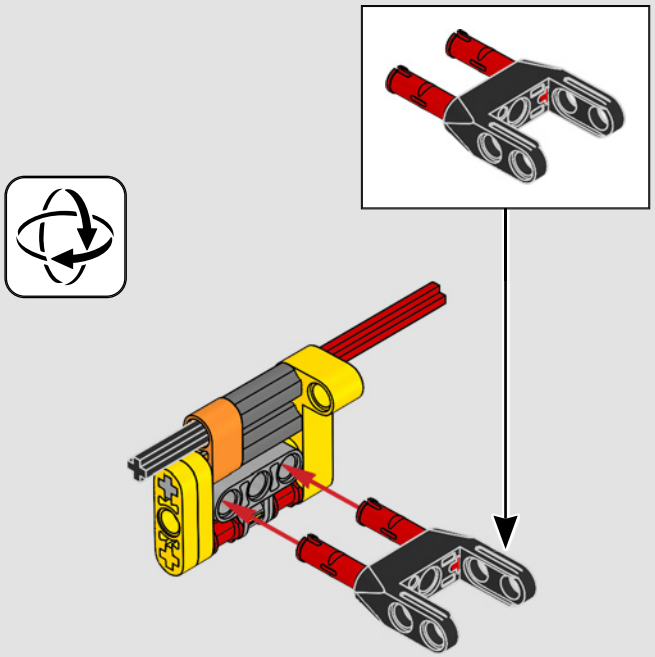

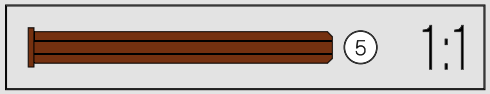

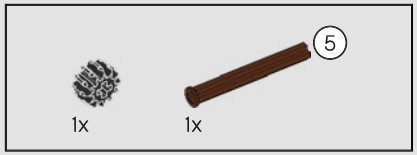

92

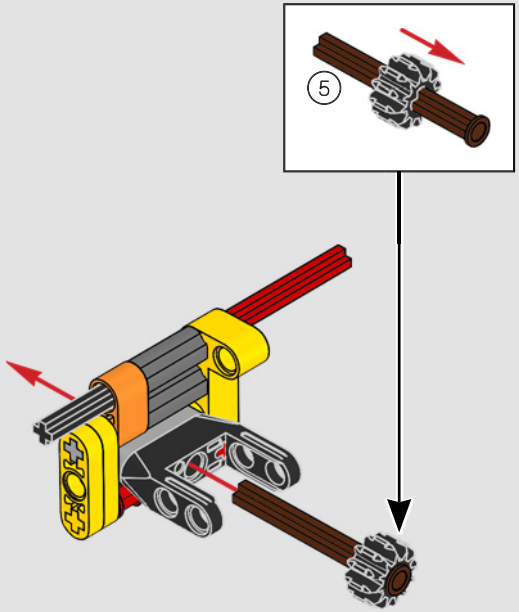

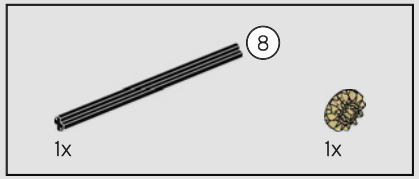

93

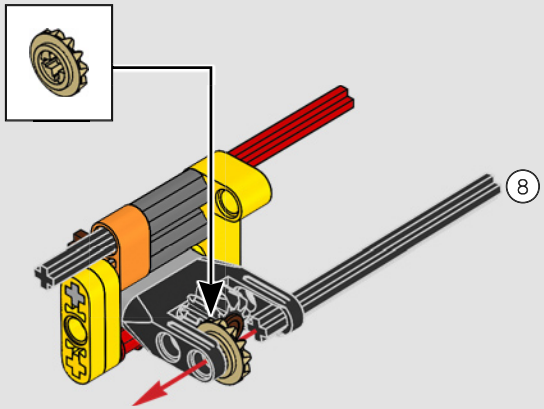

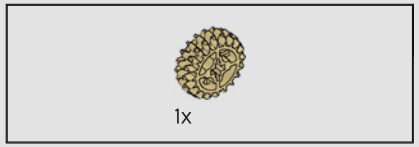

94

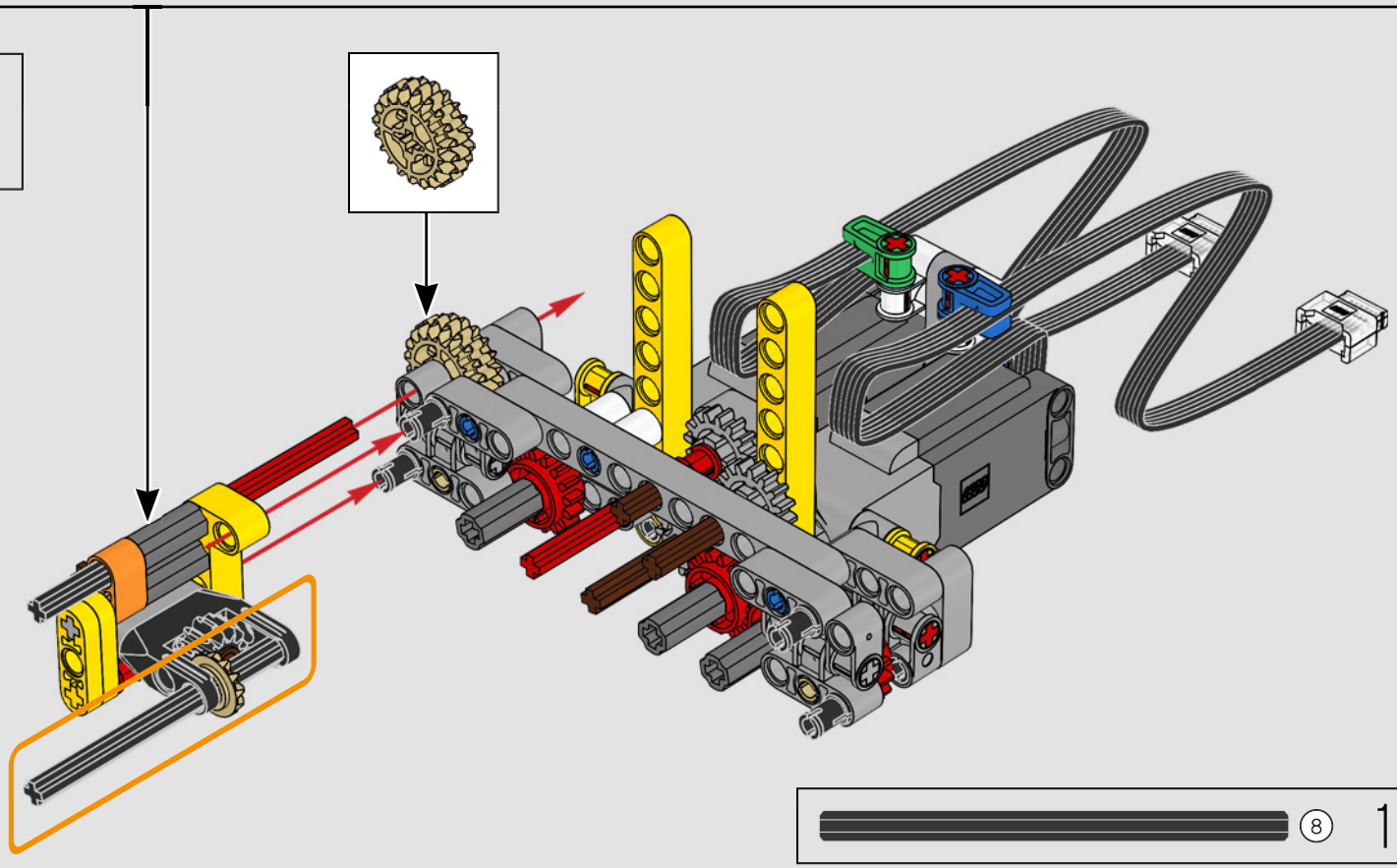

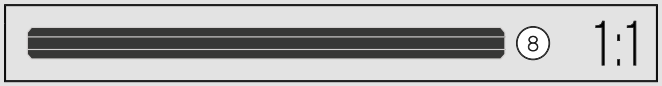

95

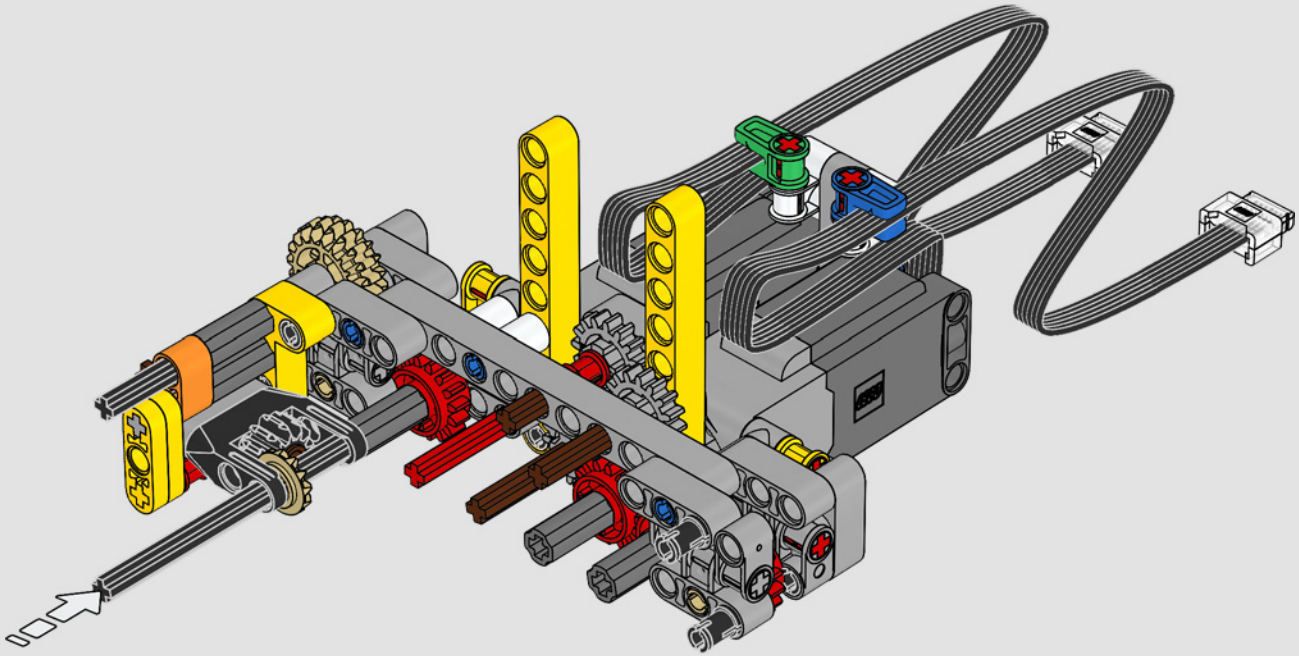

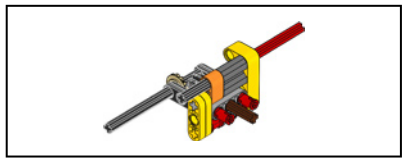

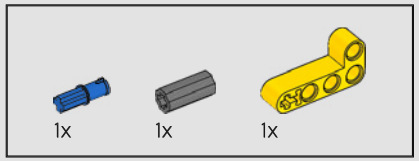

96

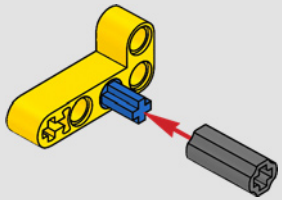

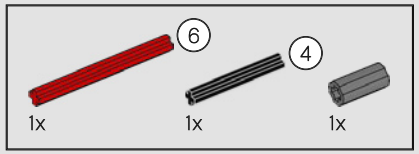

97

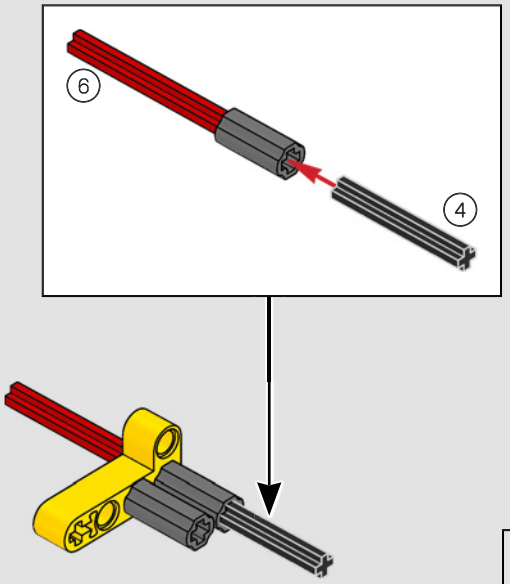

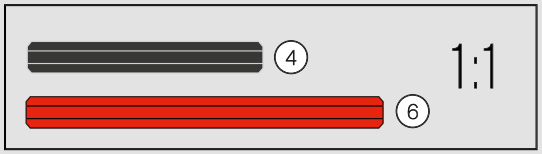

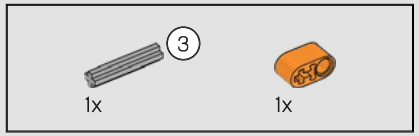

98

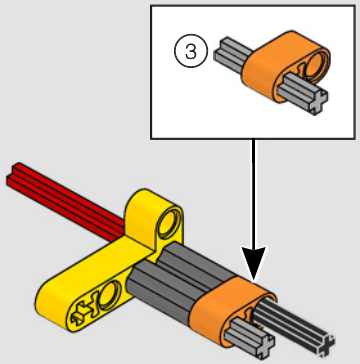

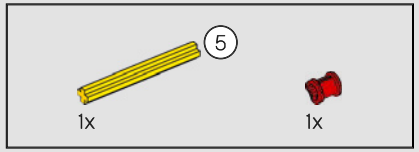

99

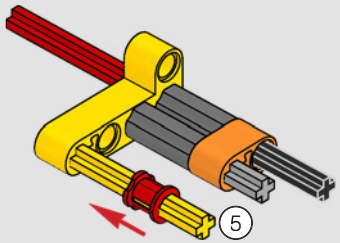

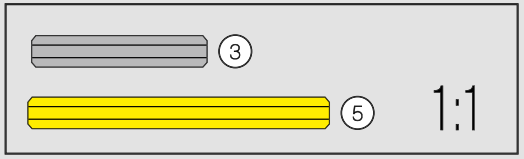

100

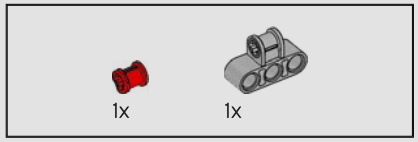

100

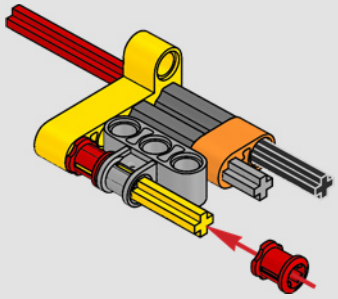

101

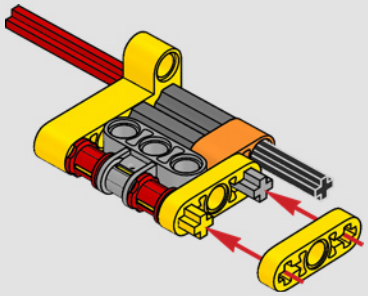

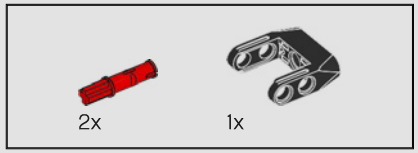

102

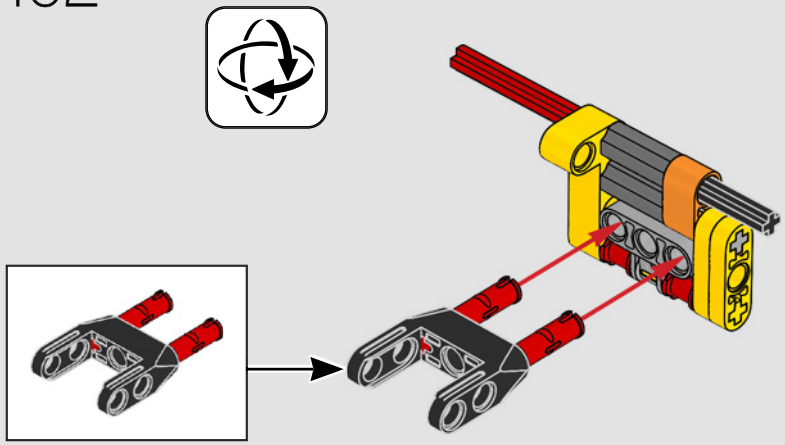

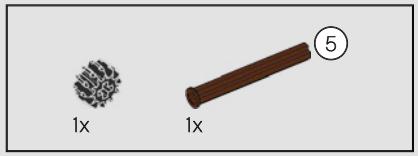

103

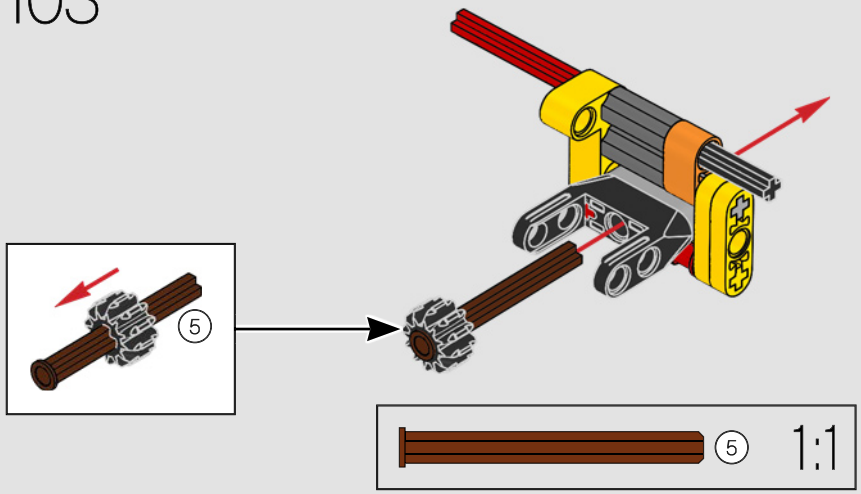

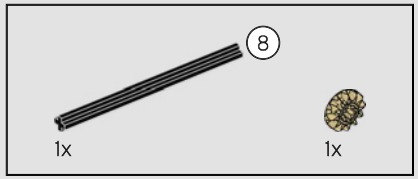

104

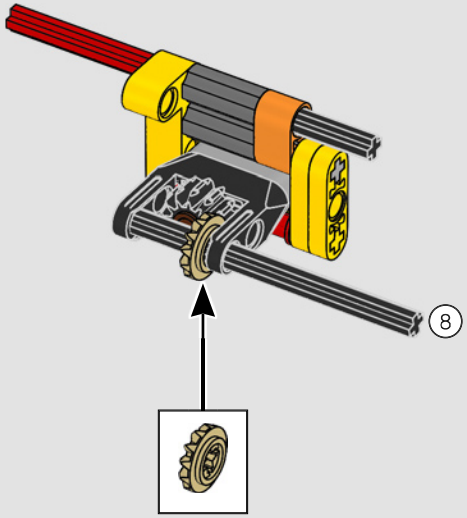

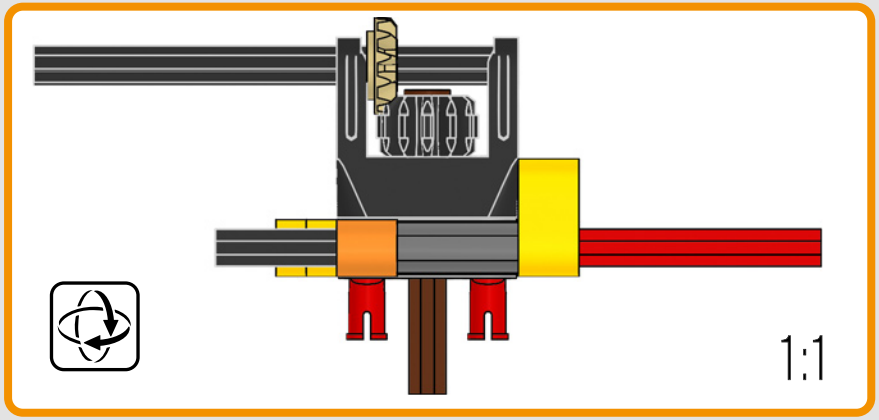

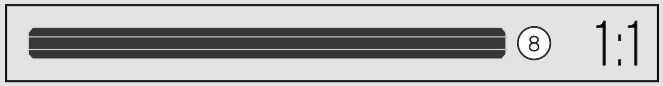

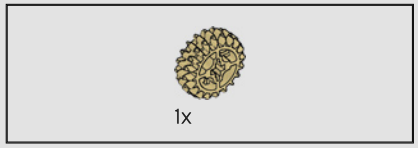

105

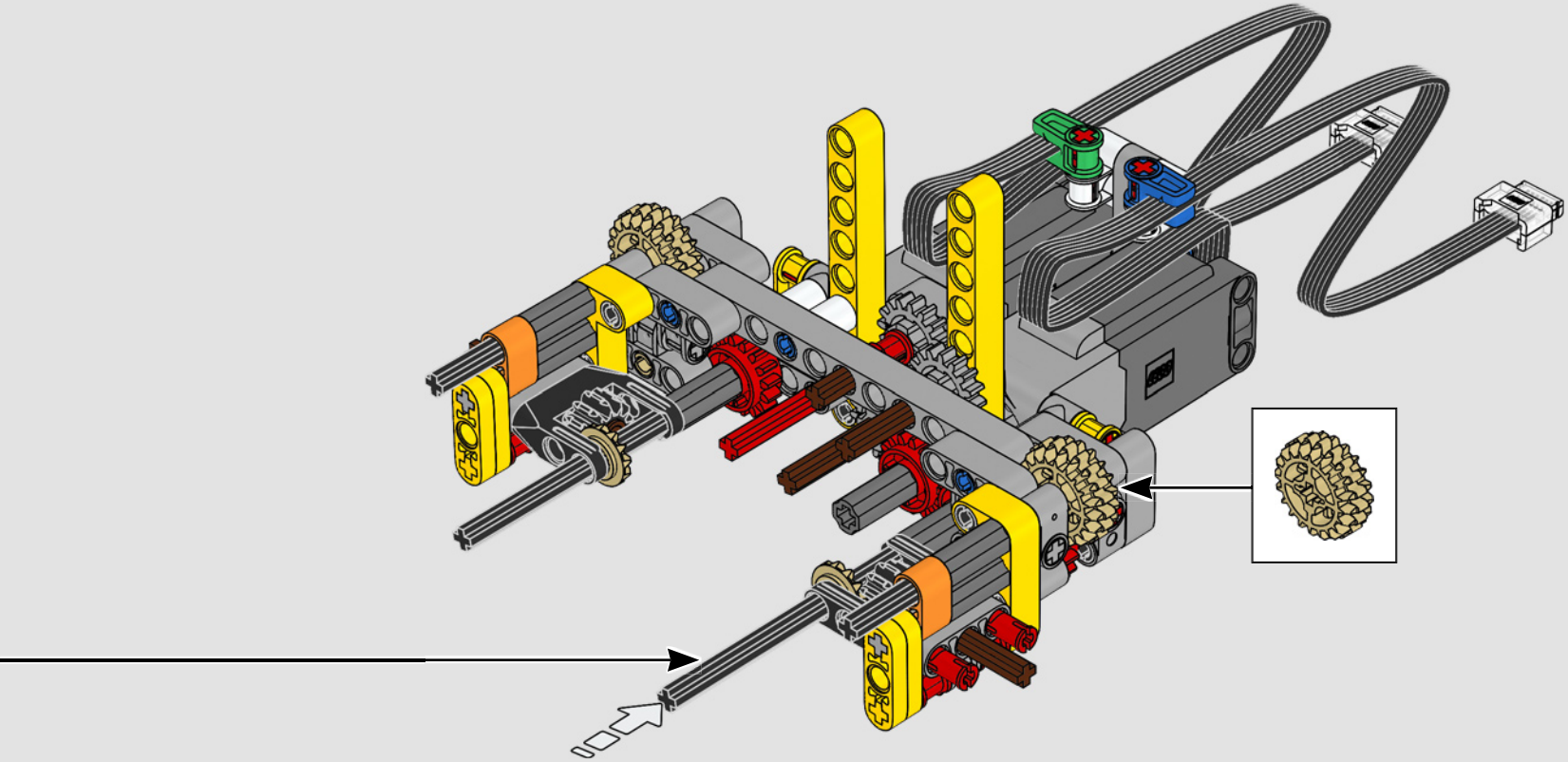

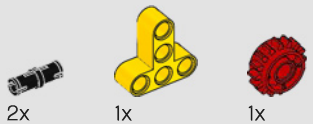

106

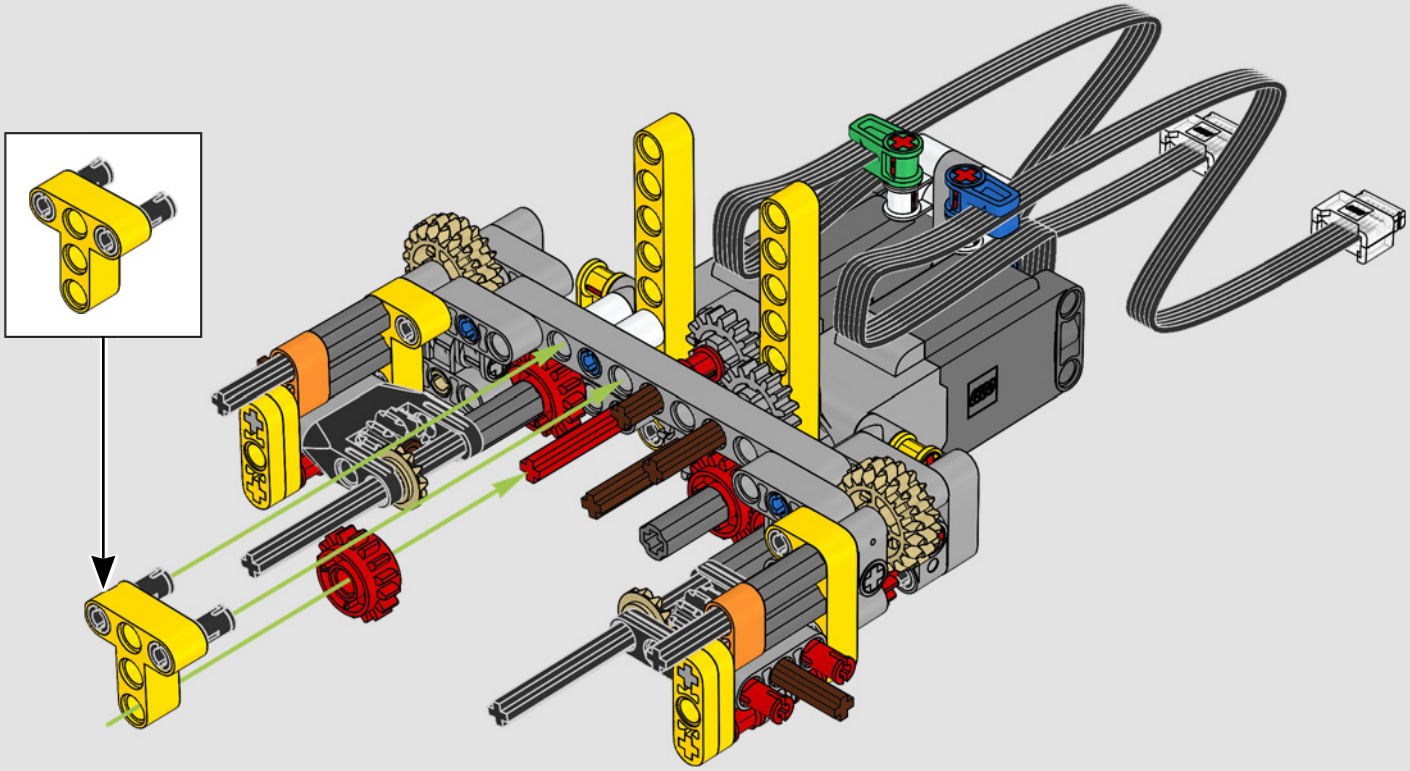

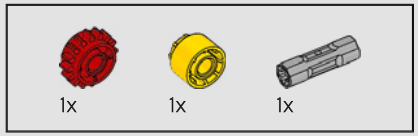

107

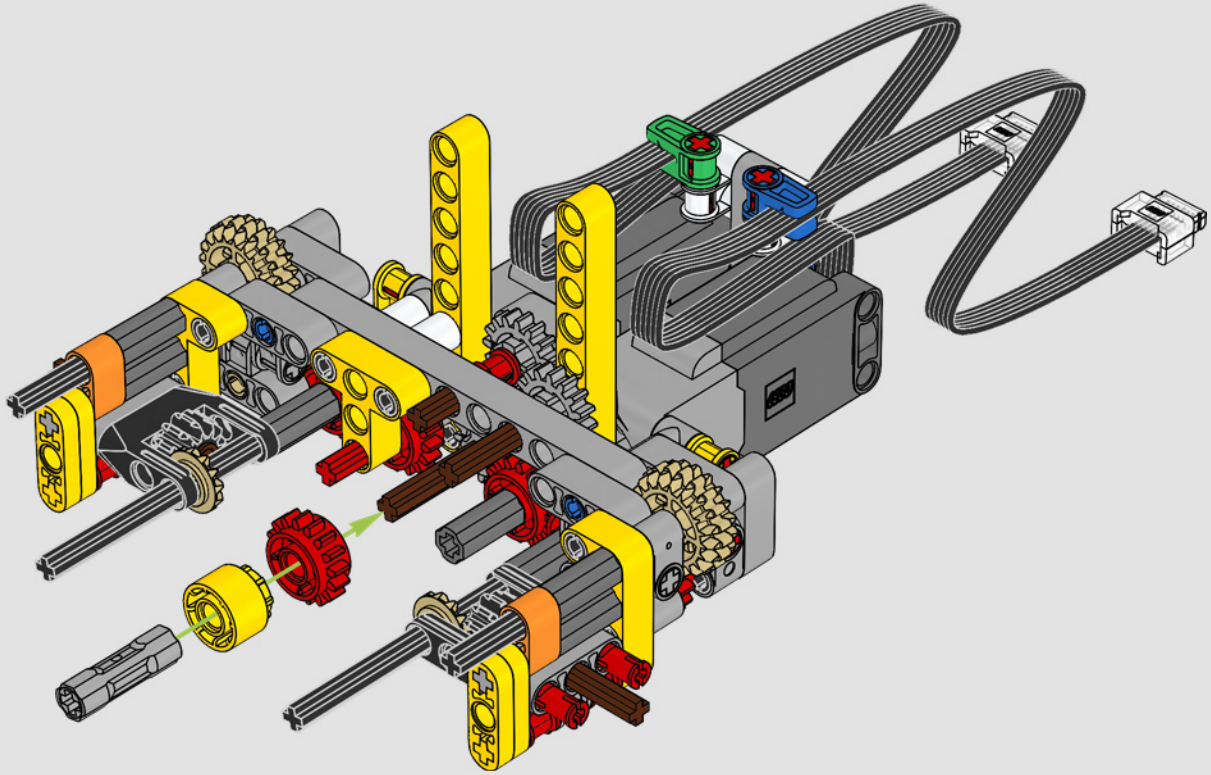

108

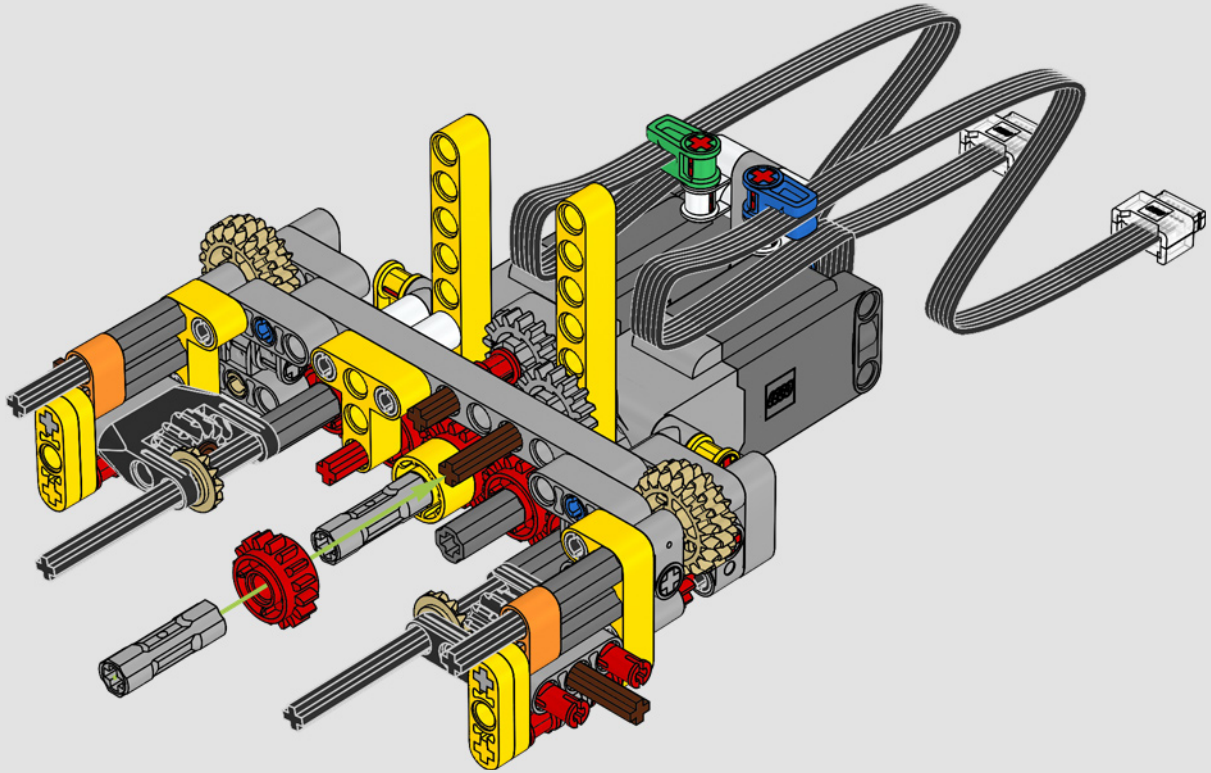

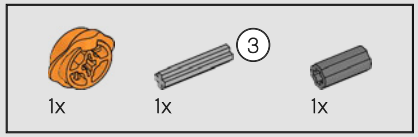

109

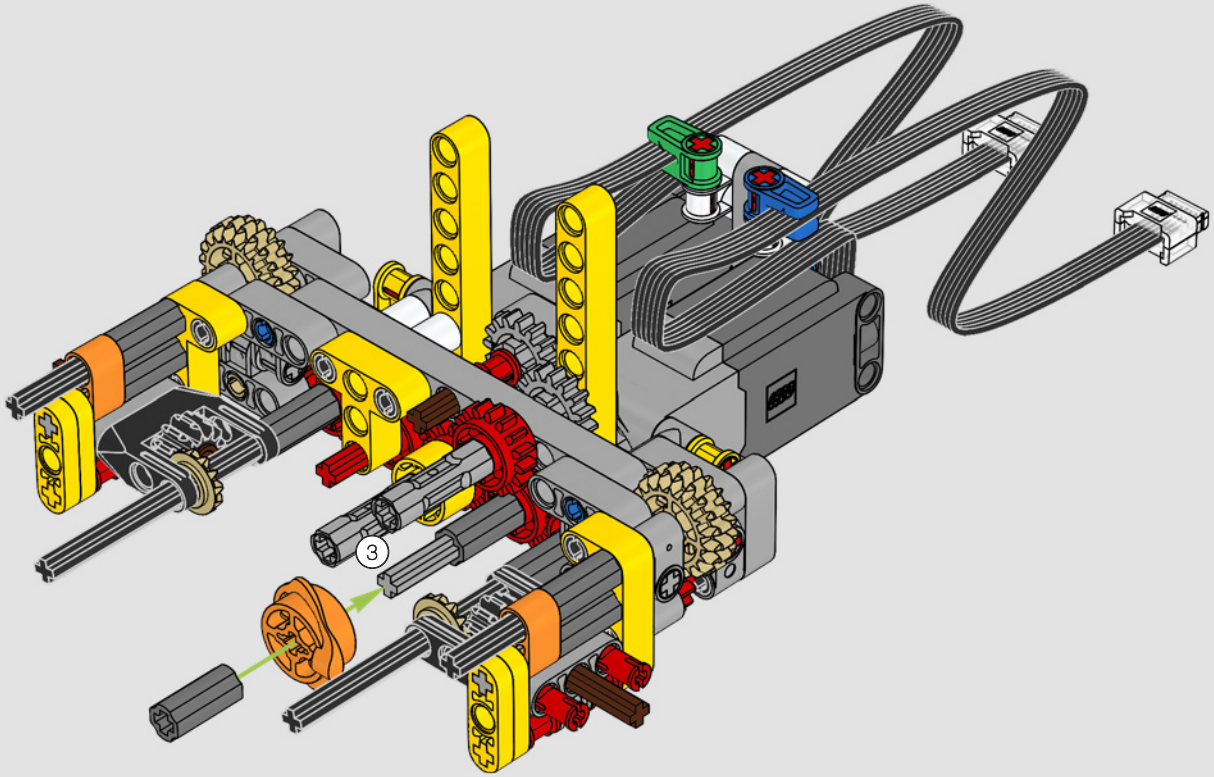

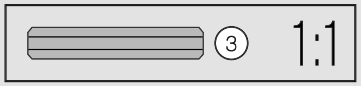

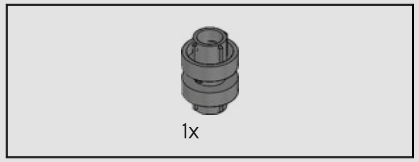

110

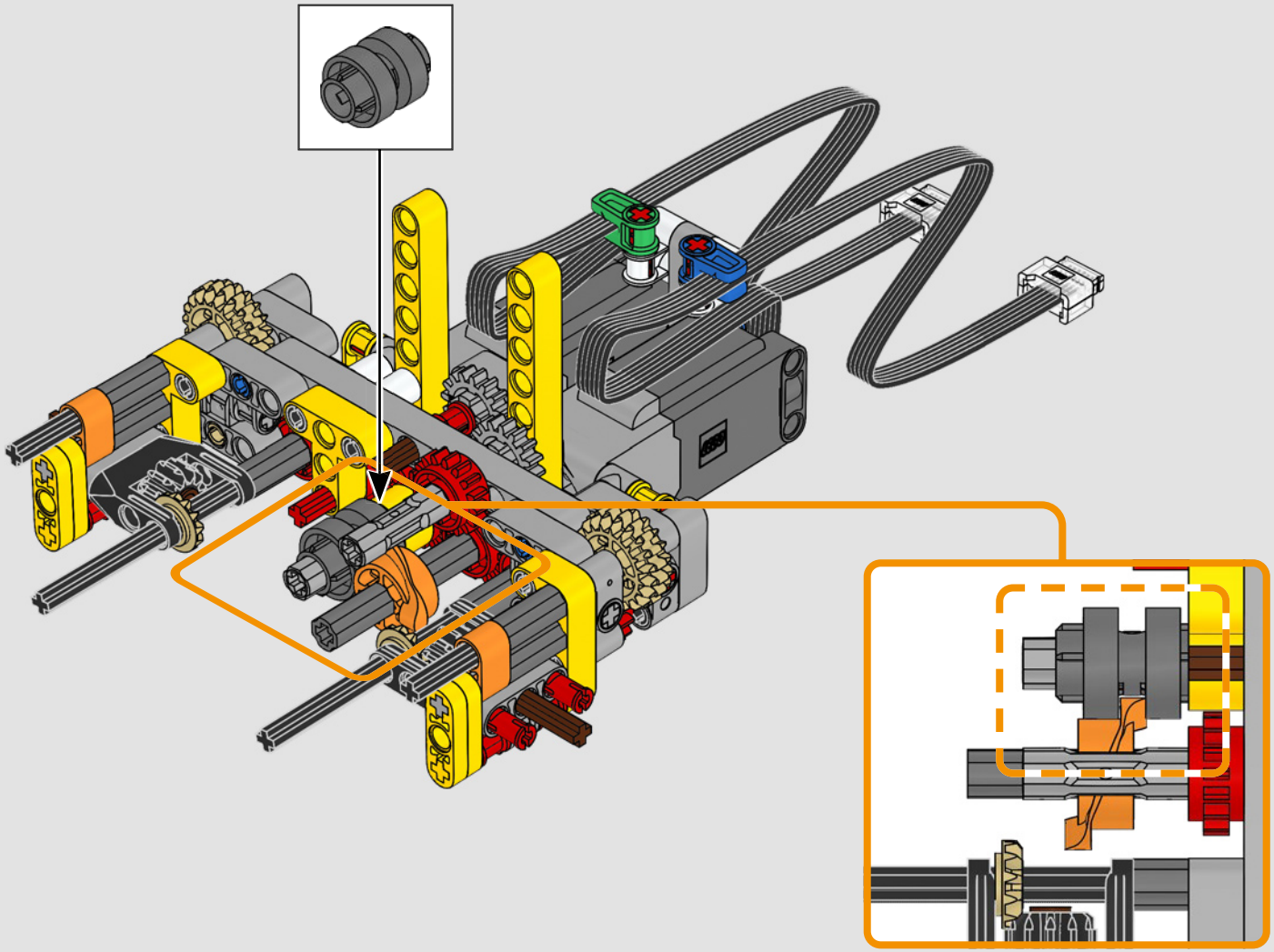

2x

111

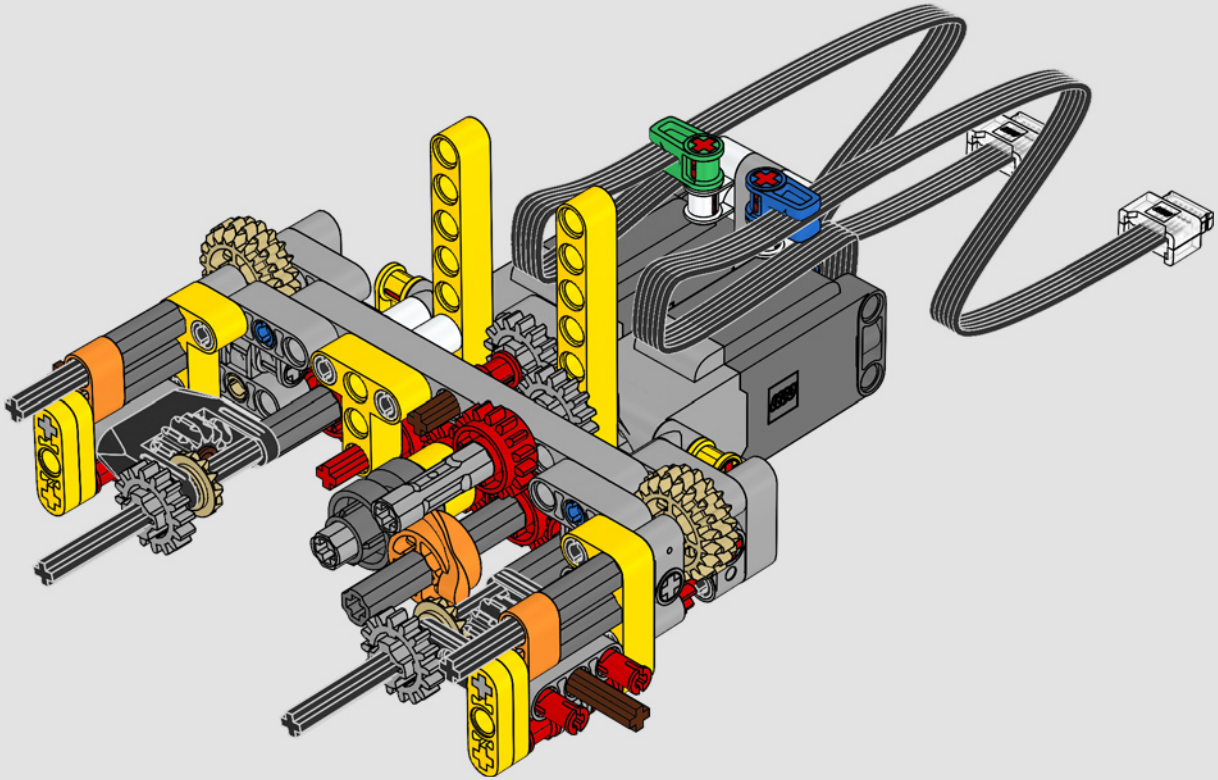

112

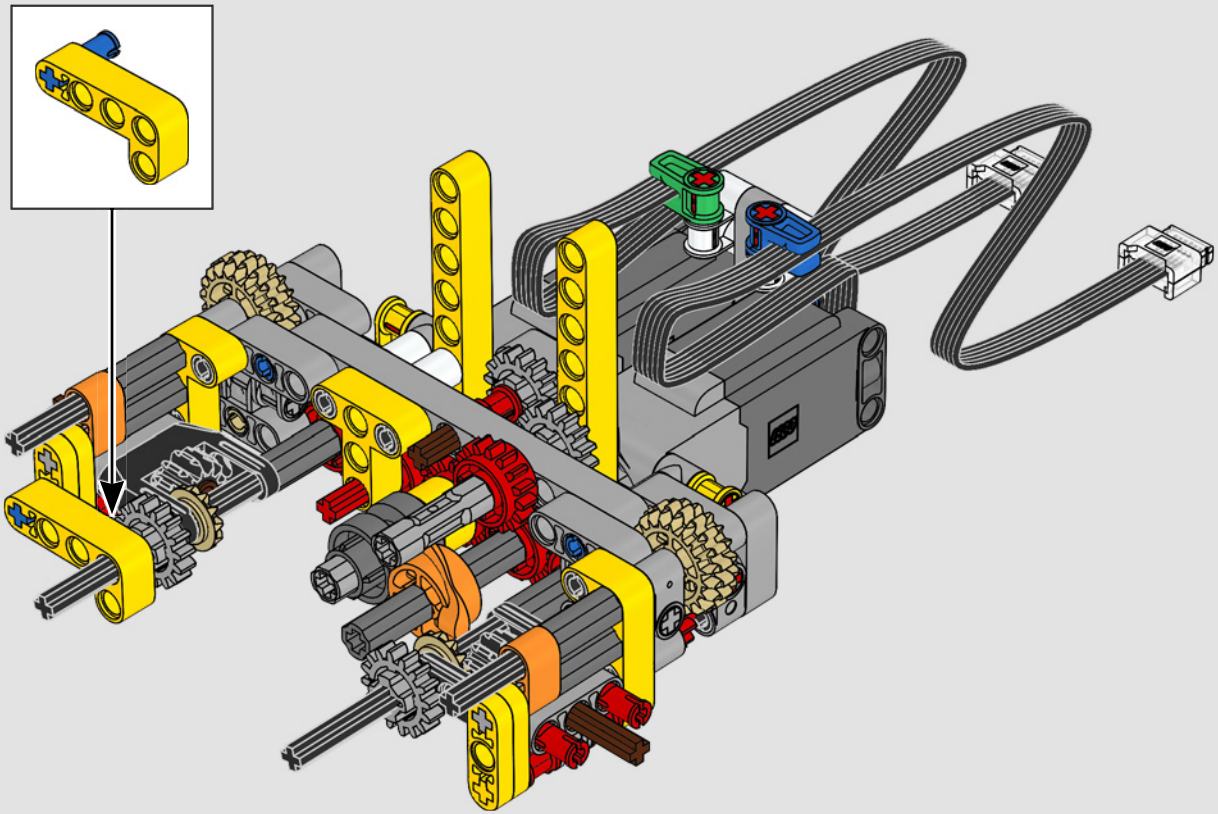

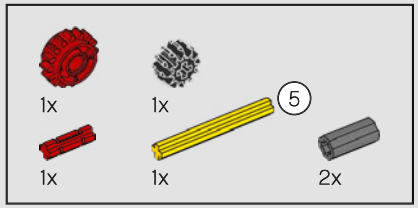

113

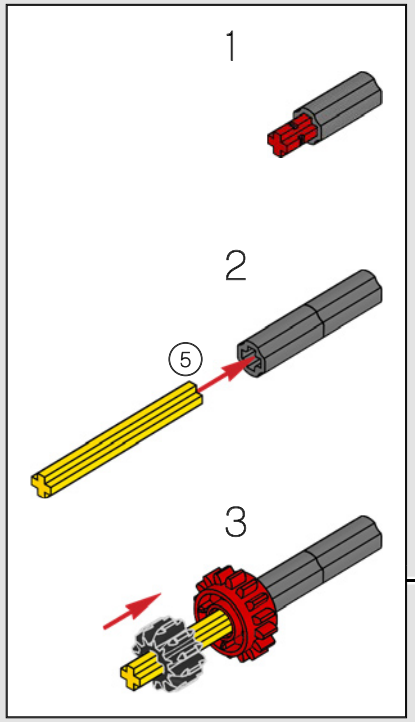

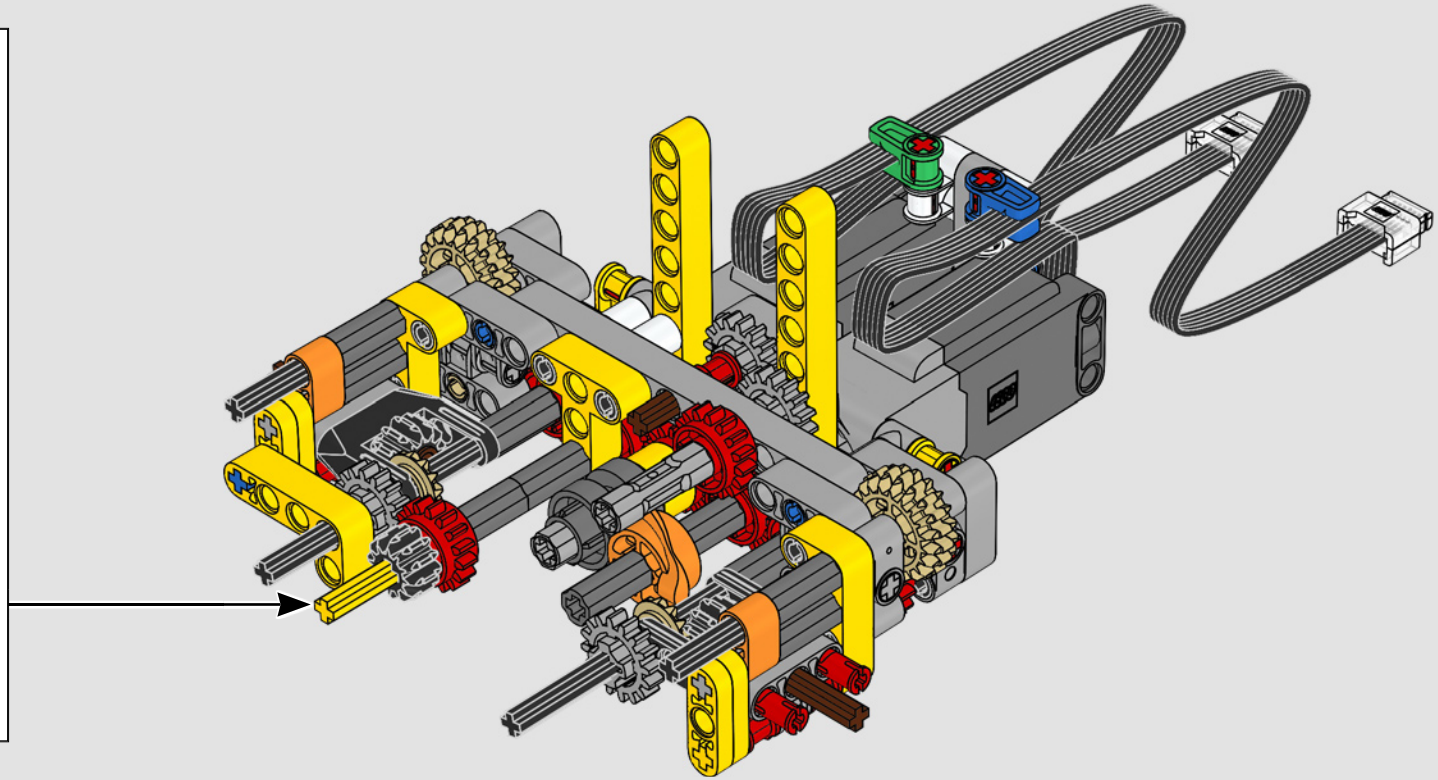

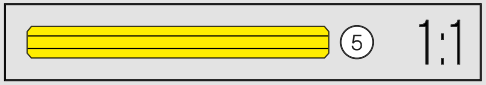

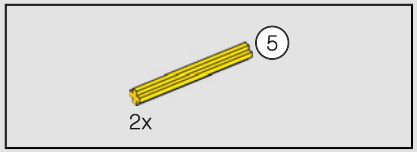

114

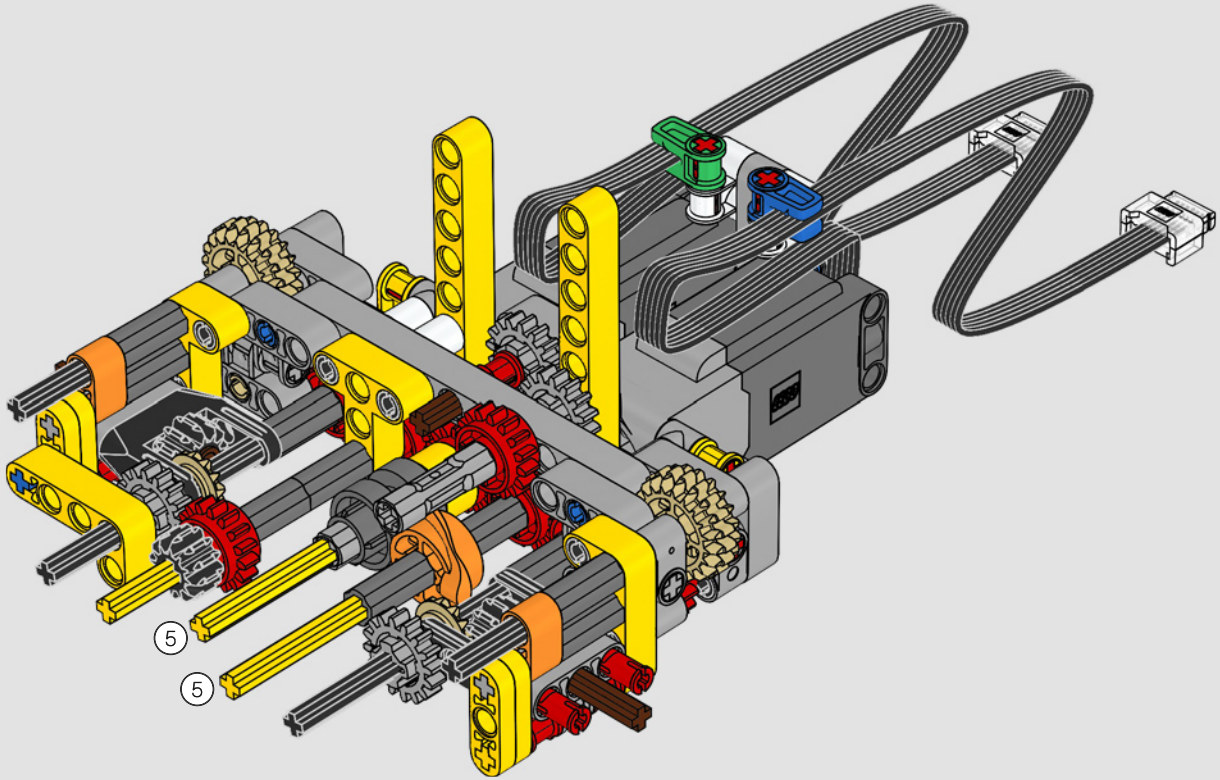

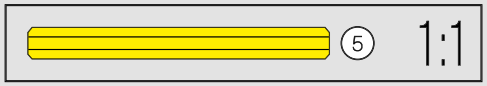

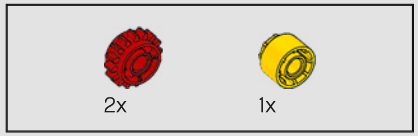

115

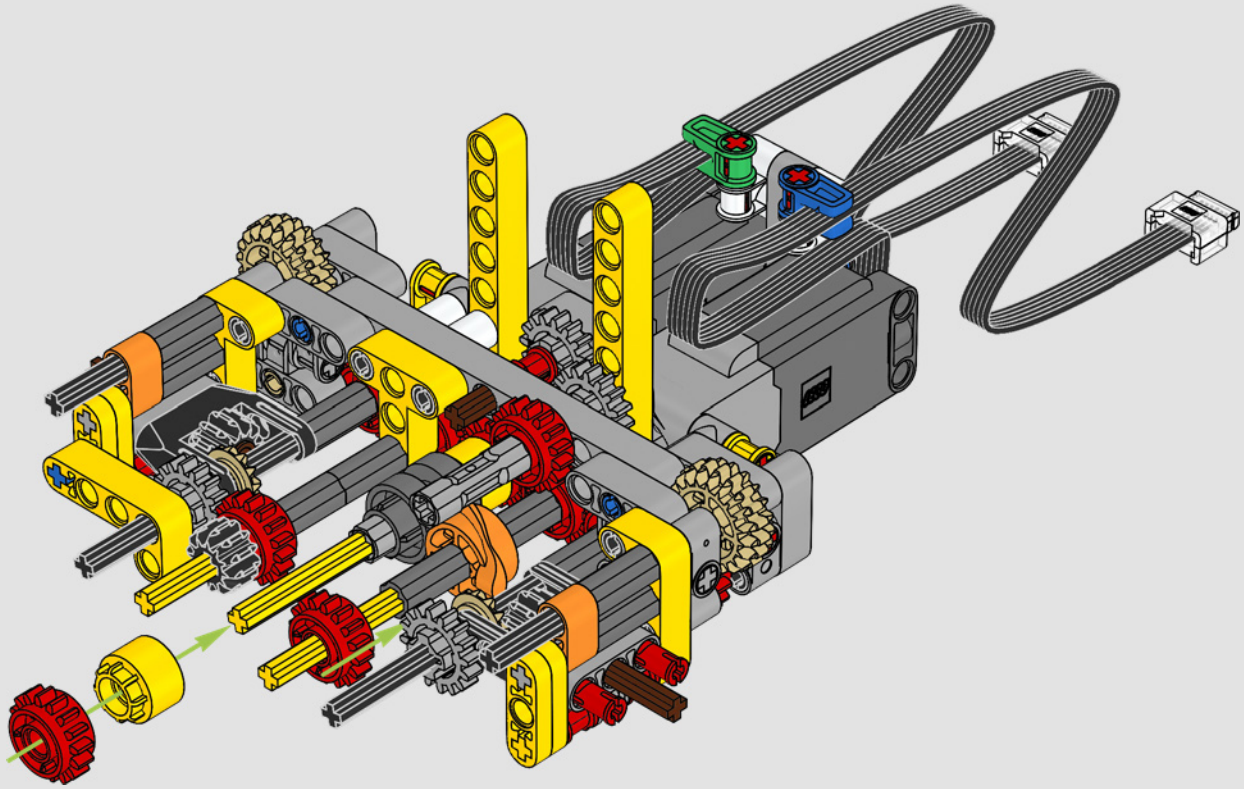

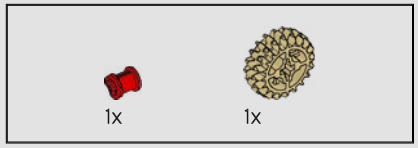

116

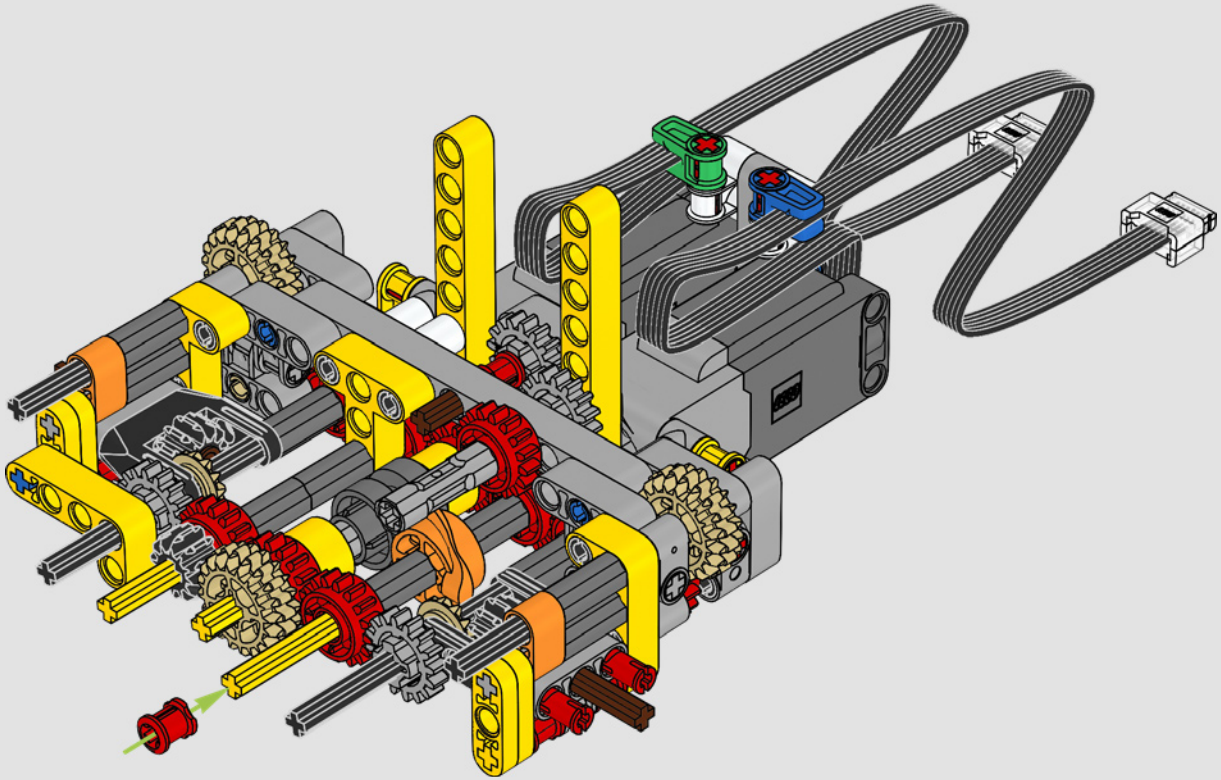

1x

117

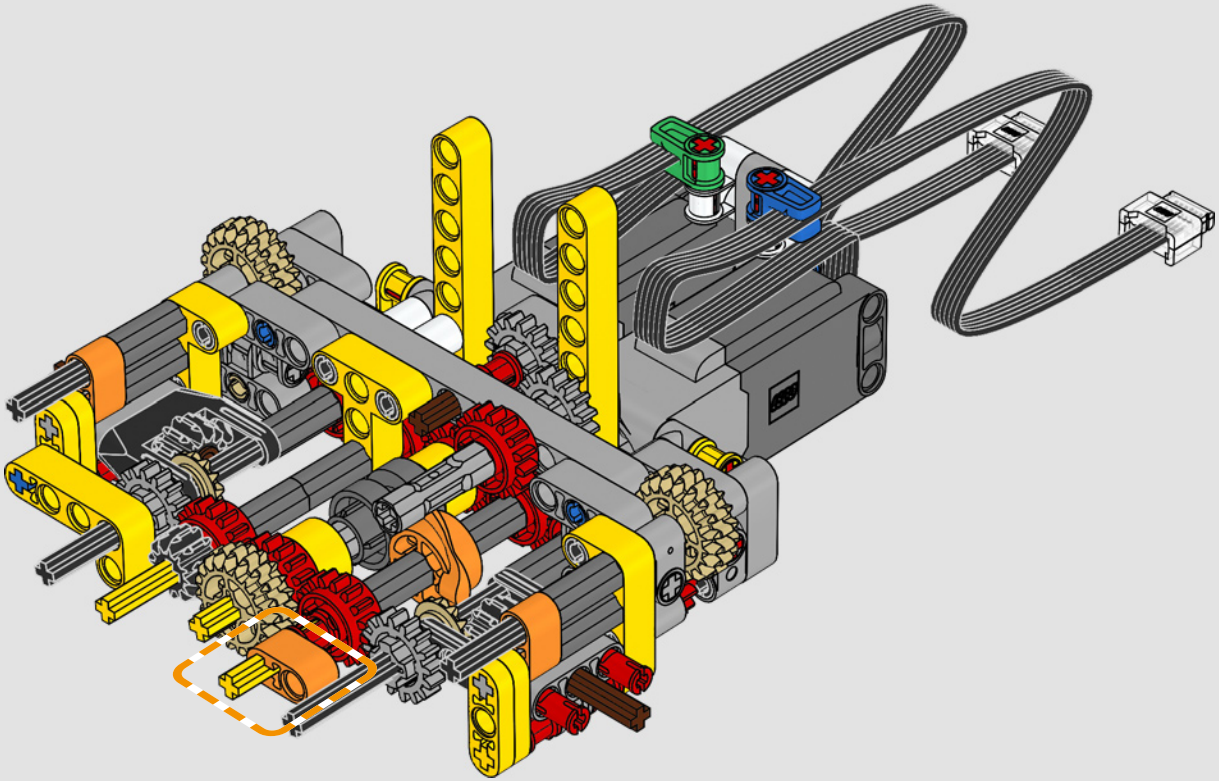

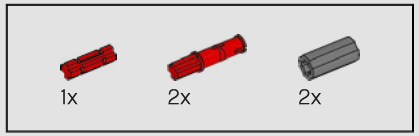

118

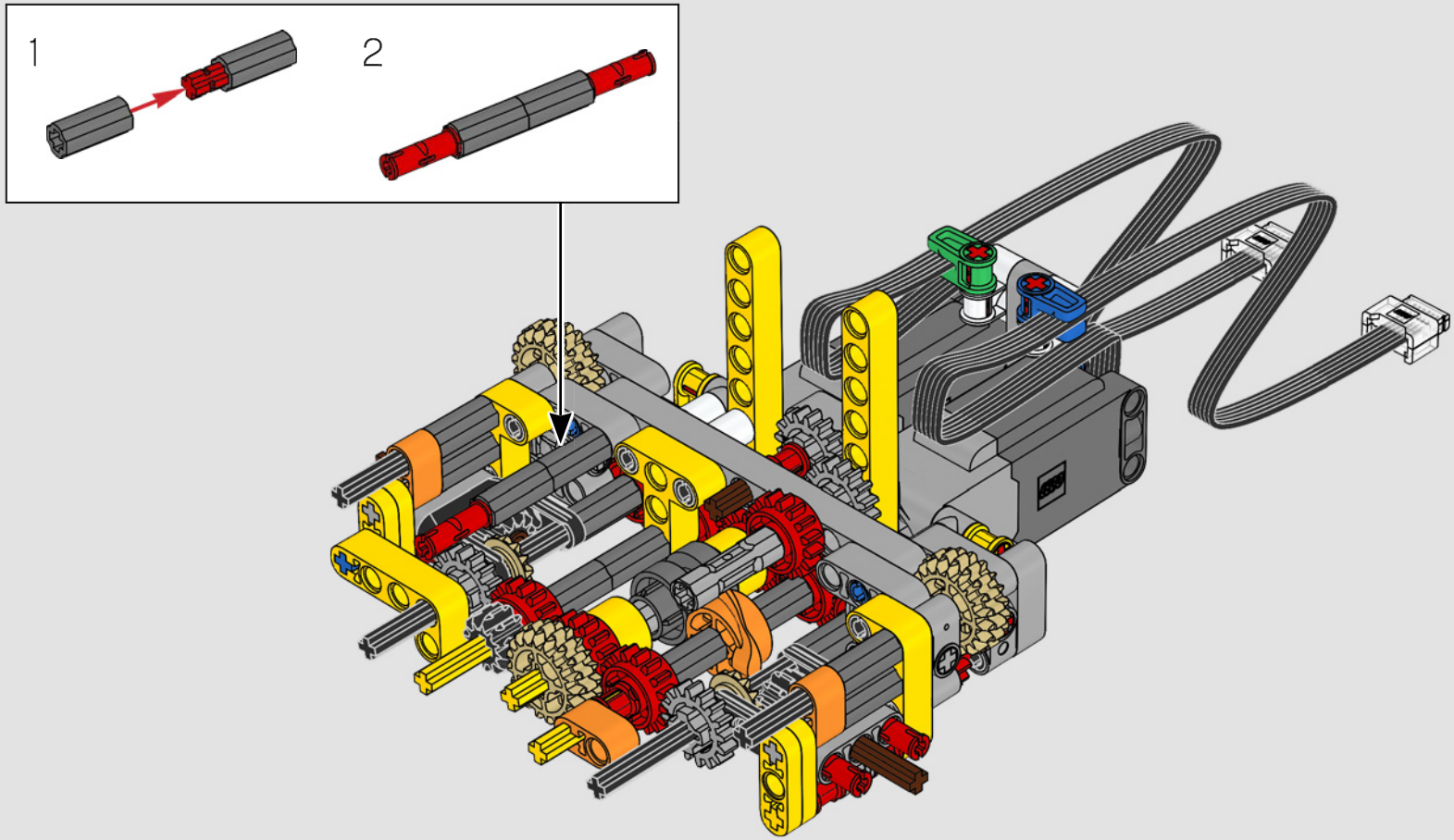

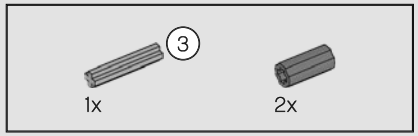

119

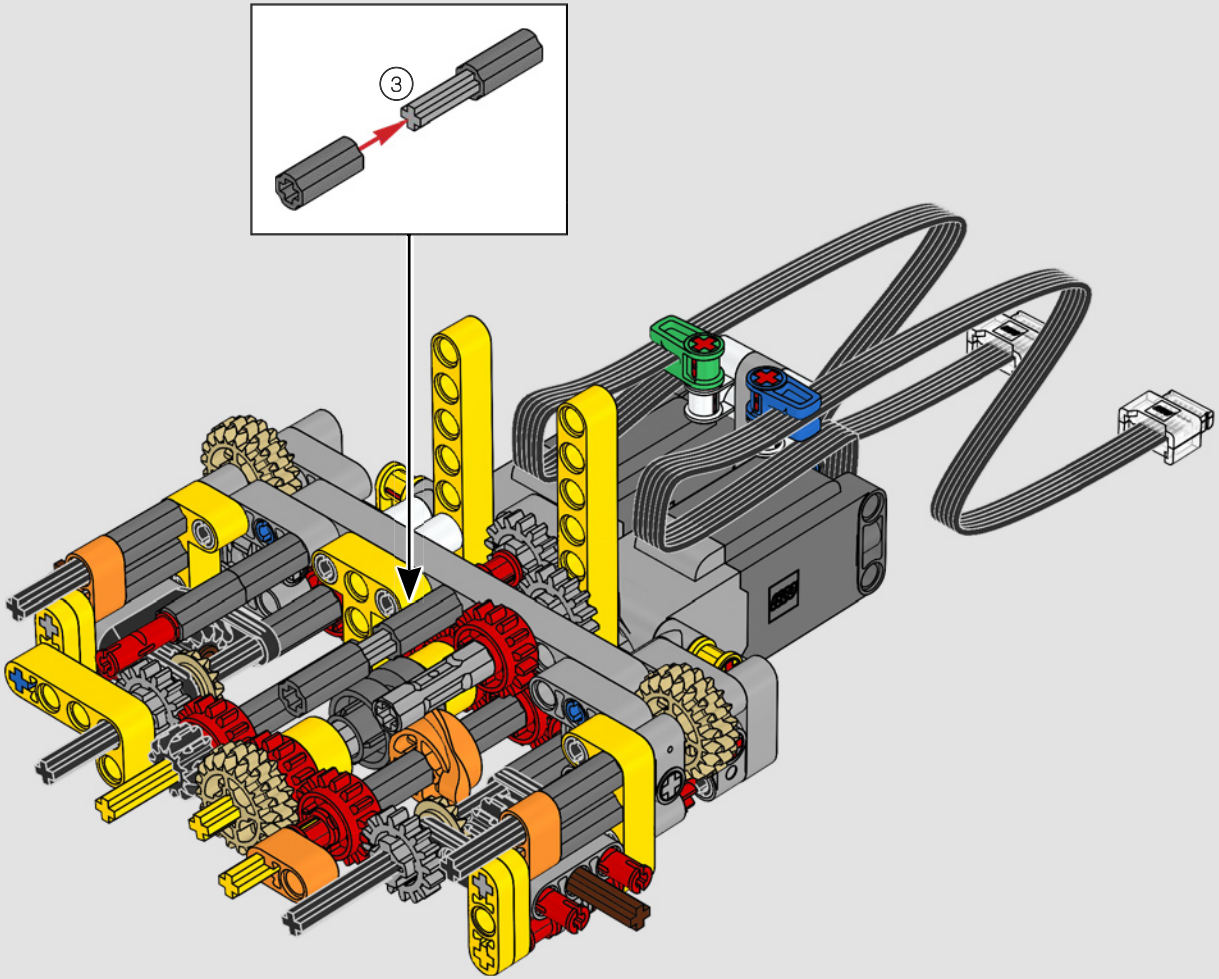

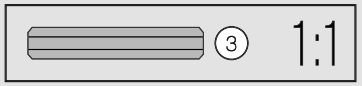

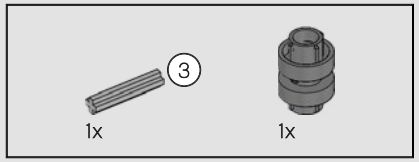

120

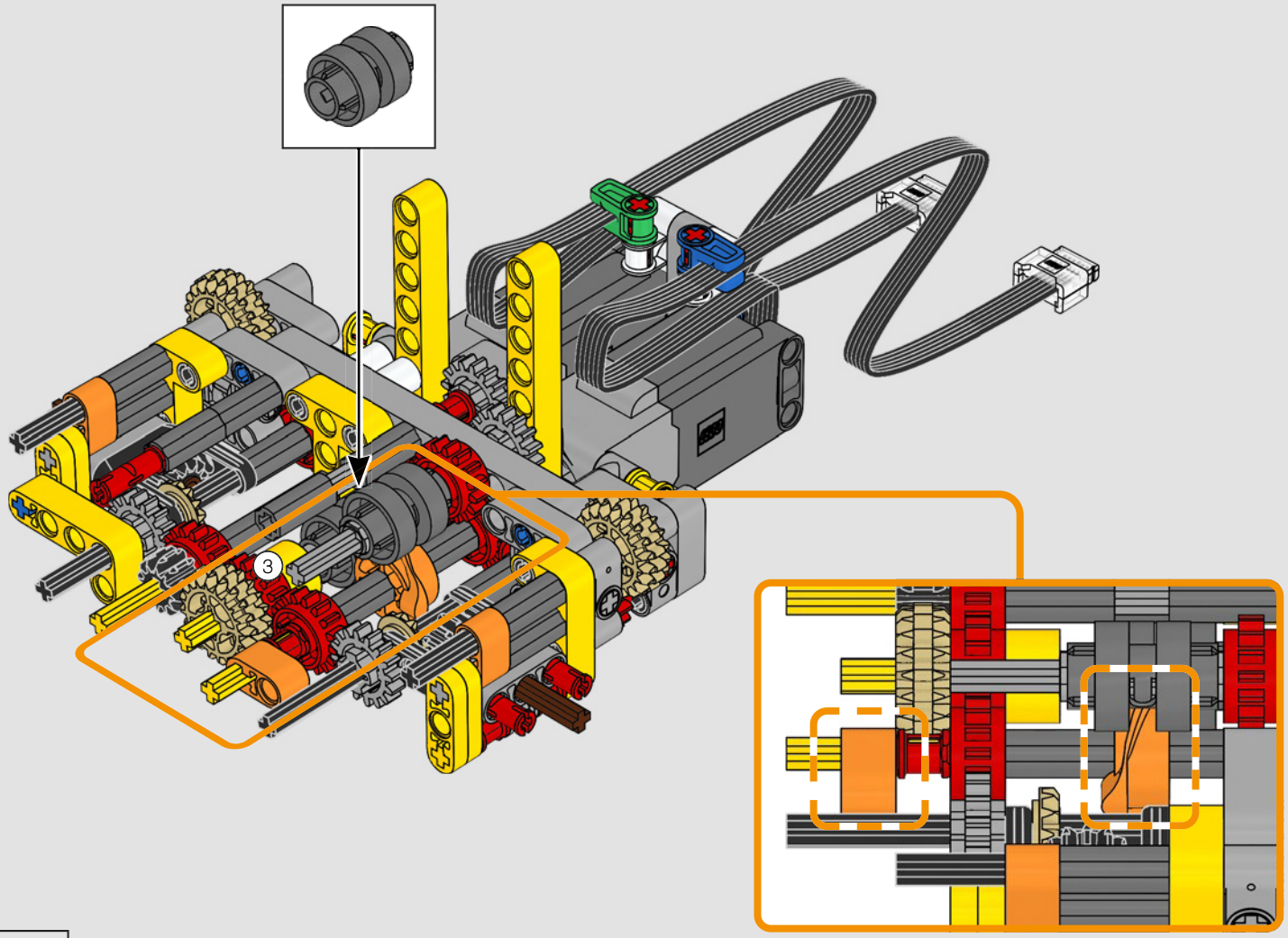

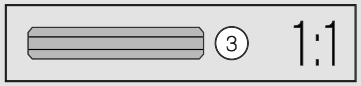

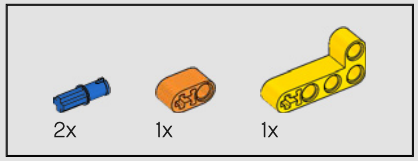

121

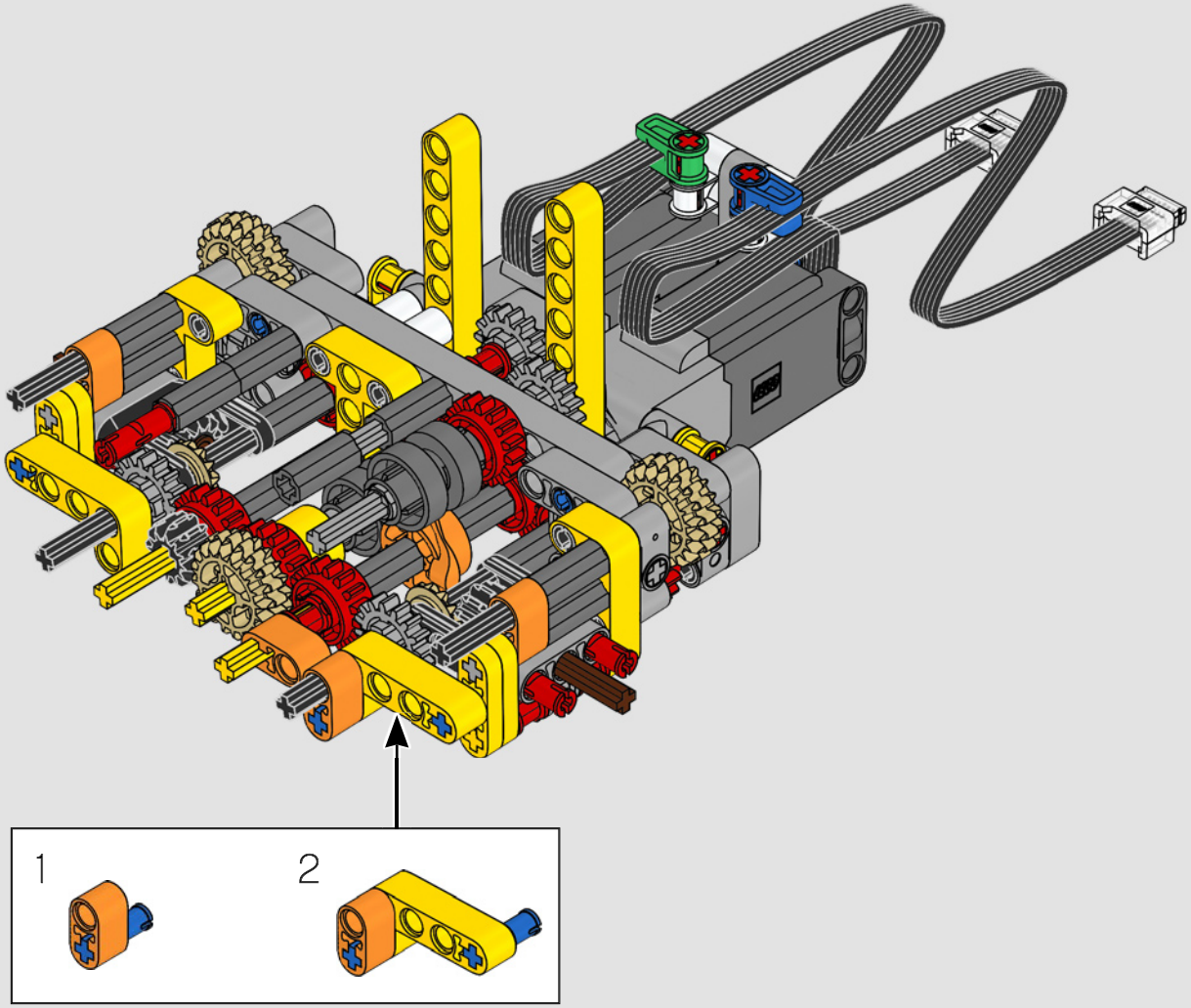

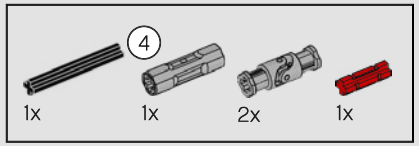

122

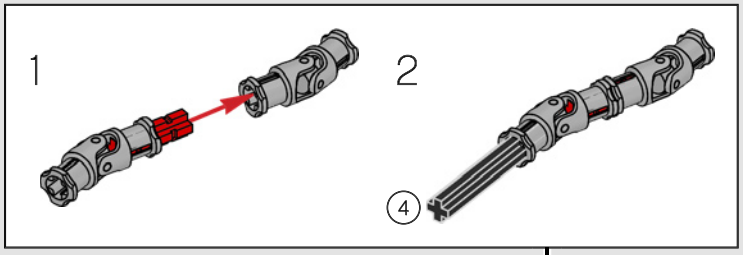

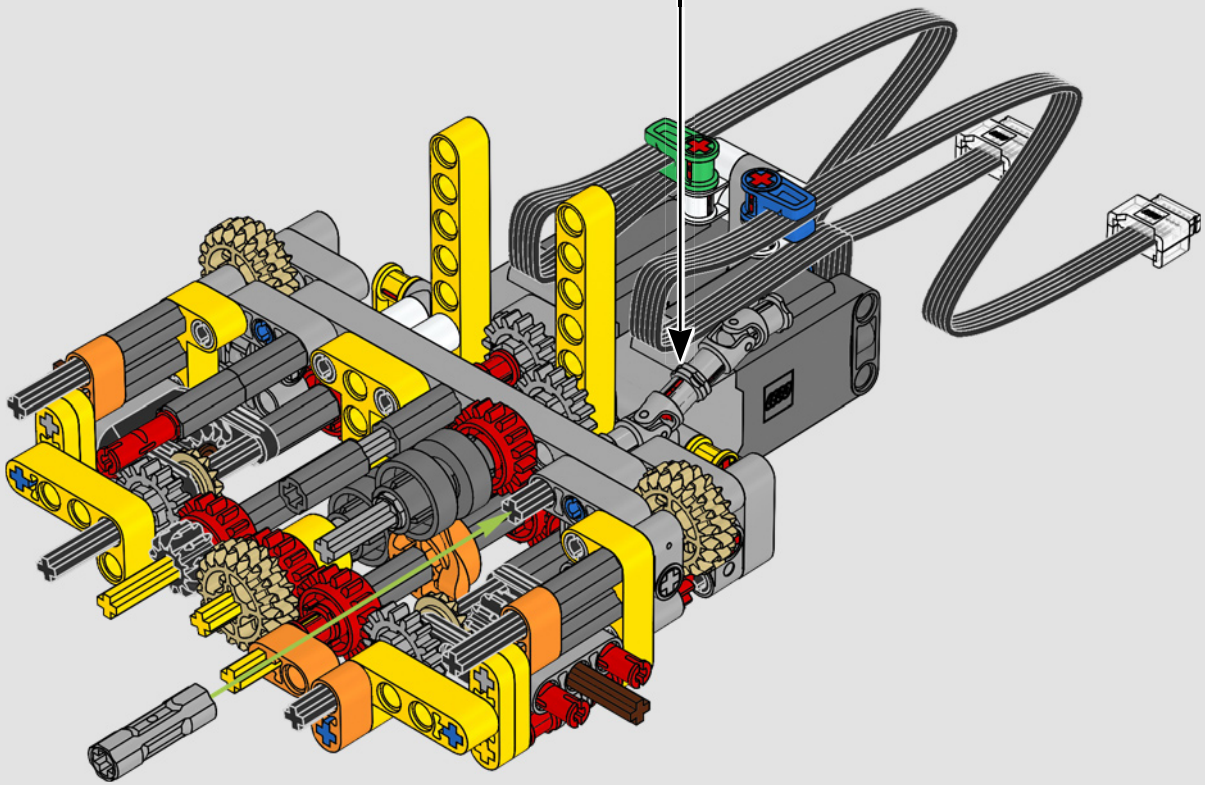

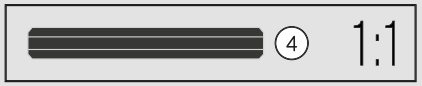

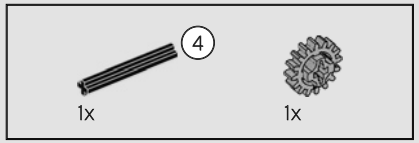

123

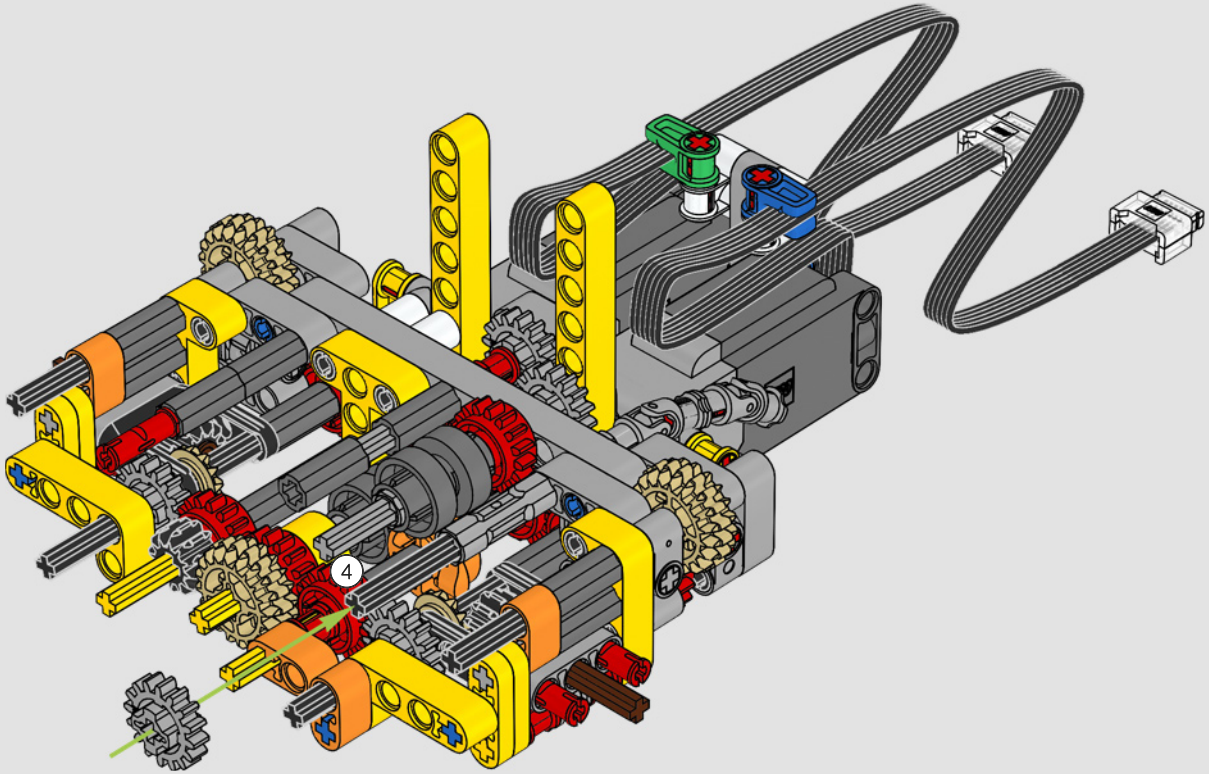

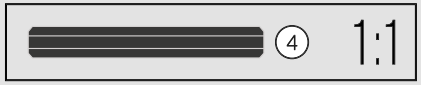

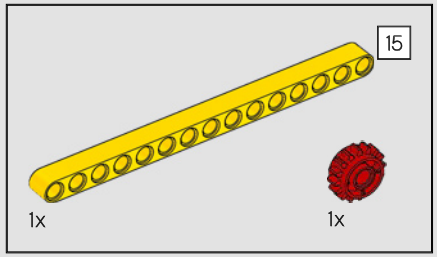

124

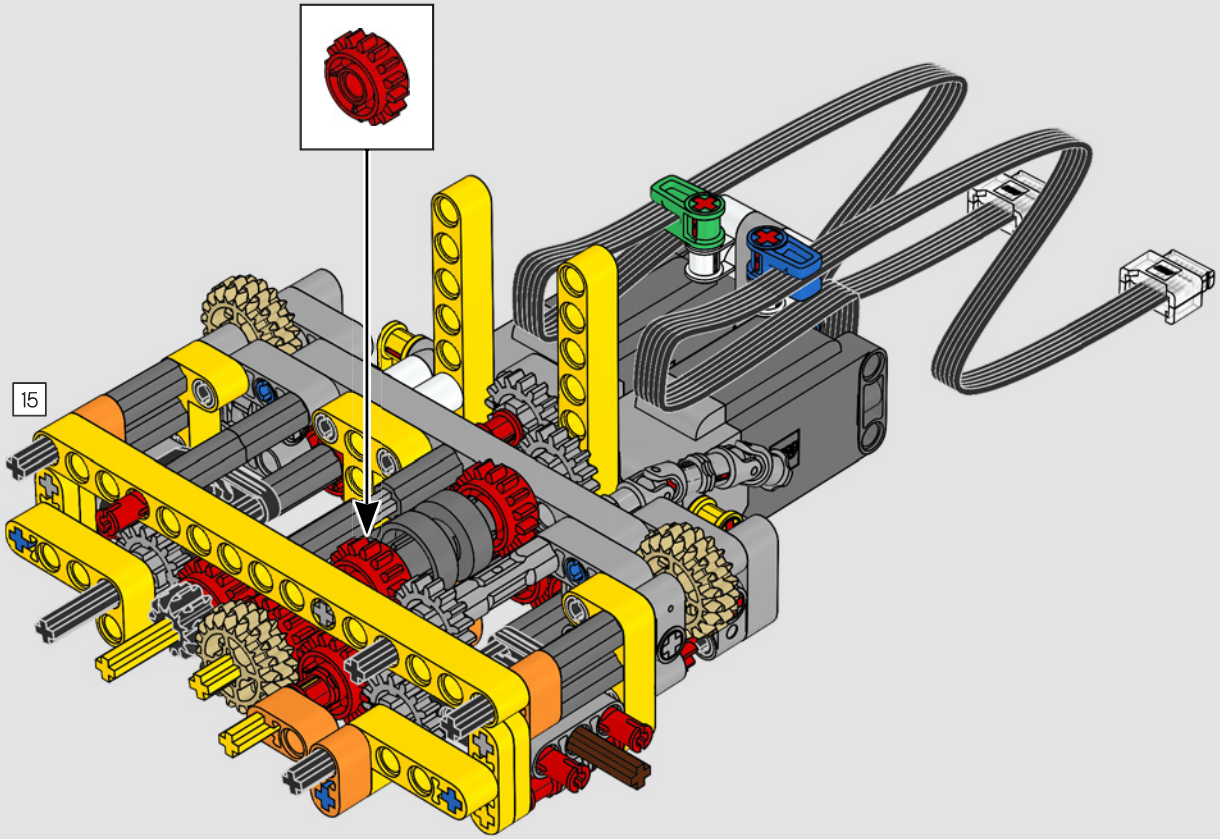

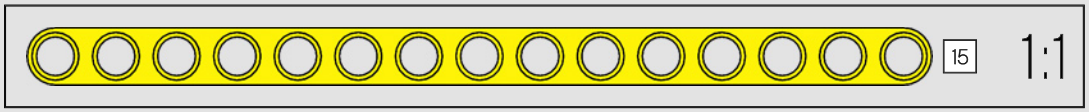

2x

125

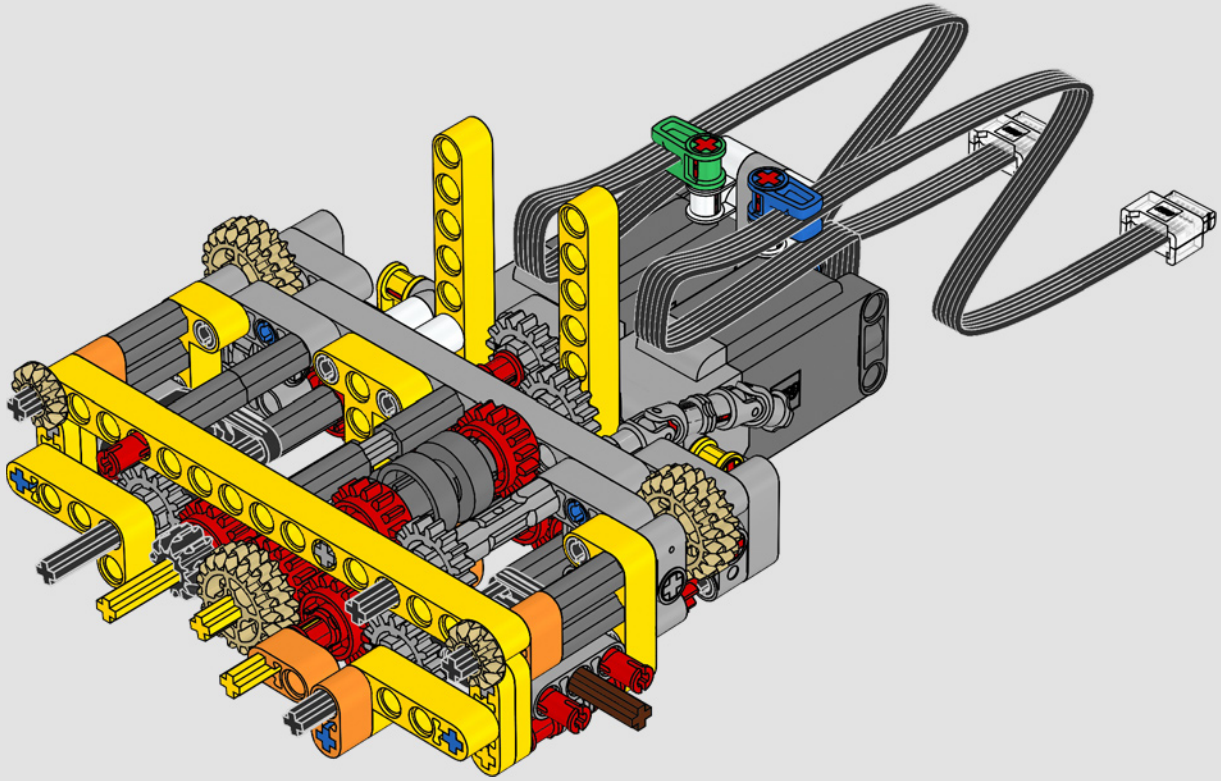

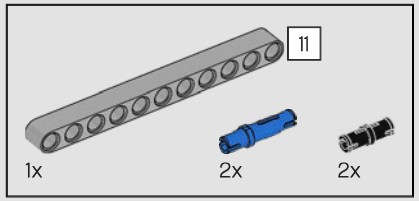

126

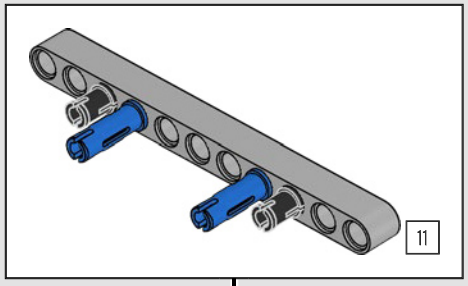

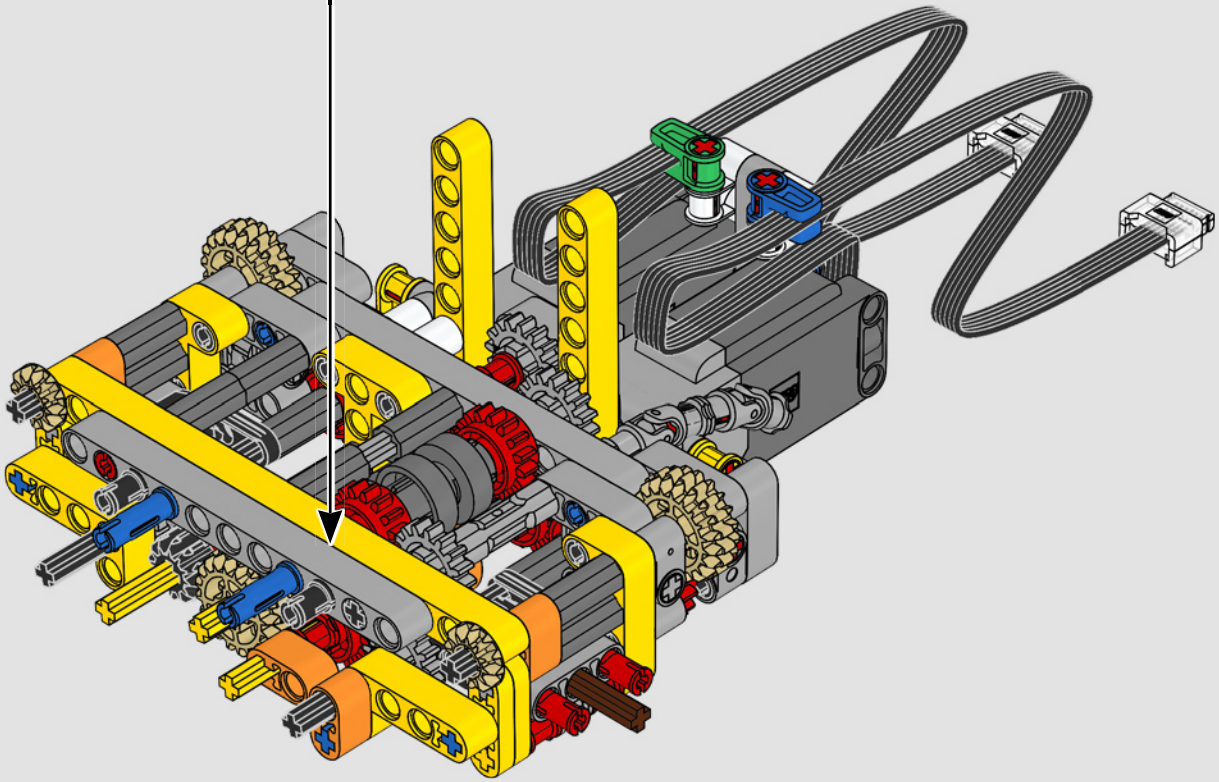

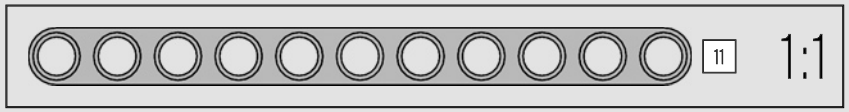

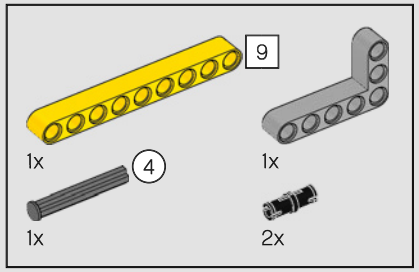

127

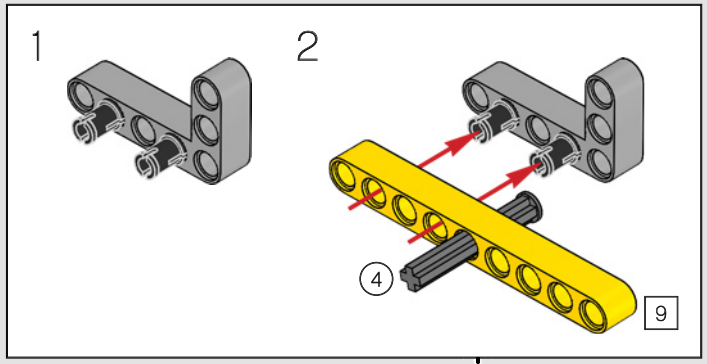

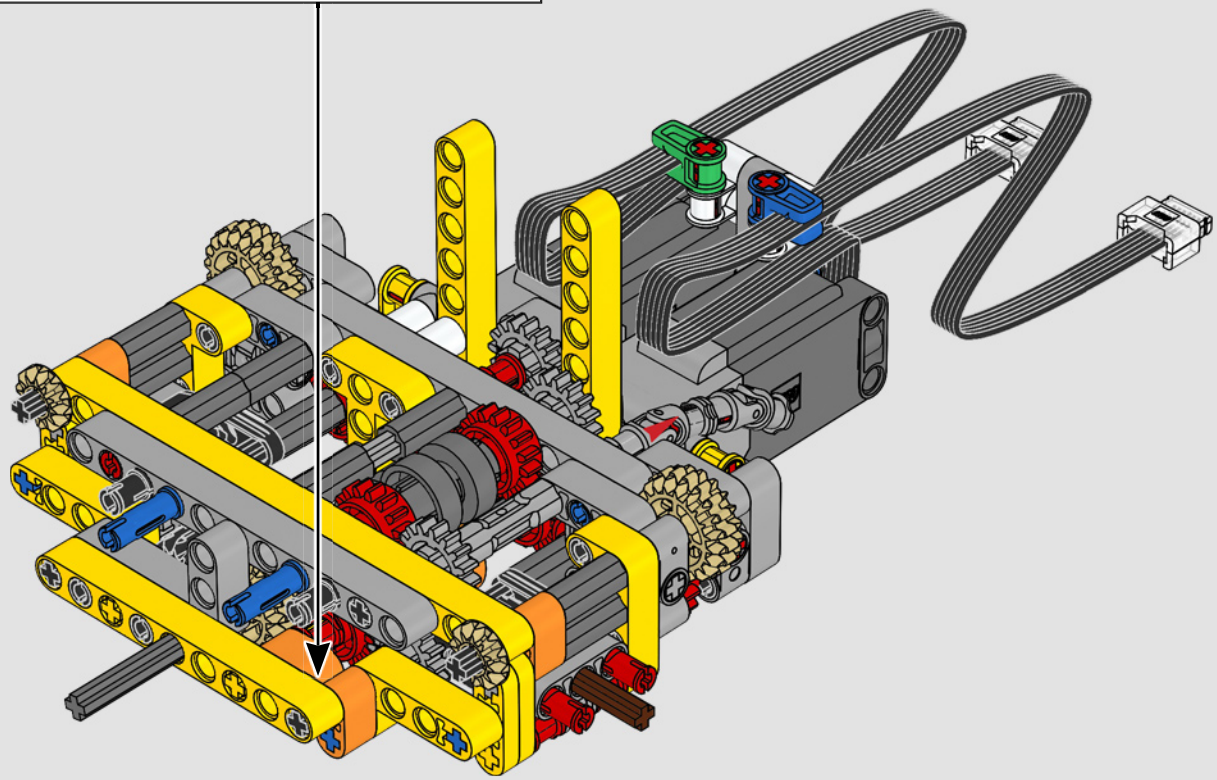

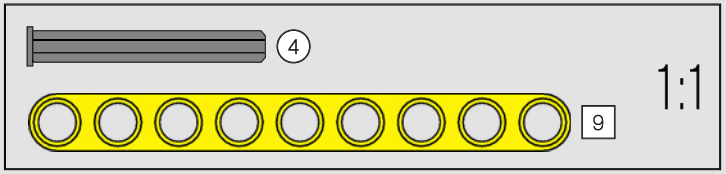

128

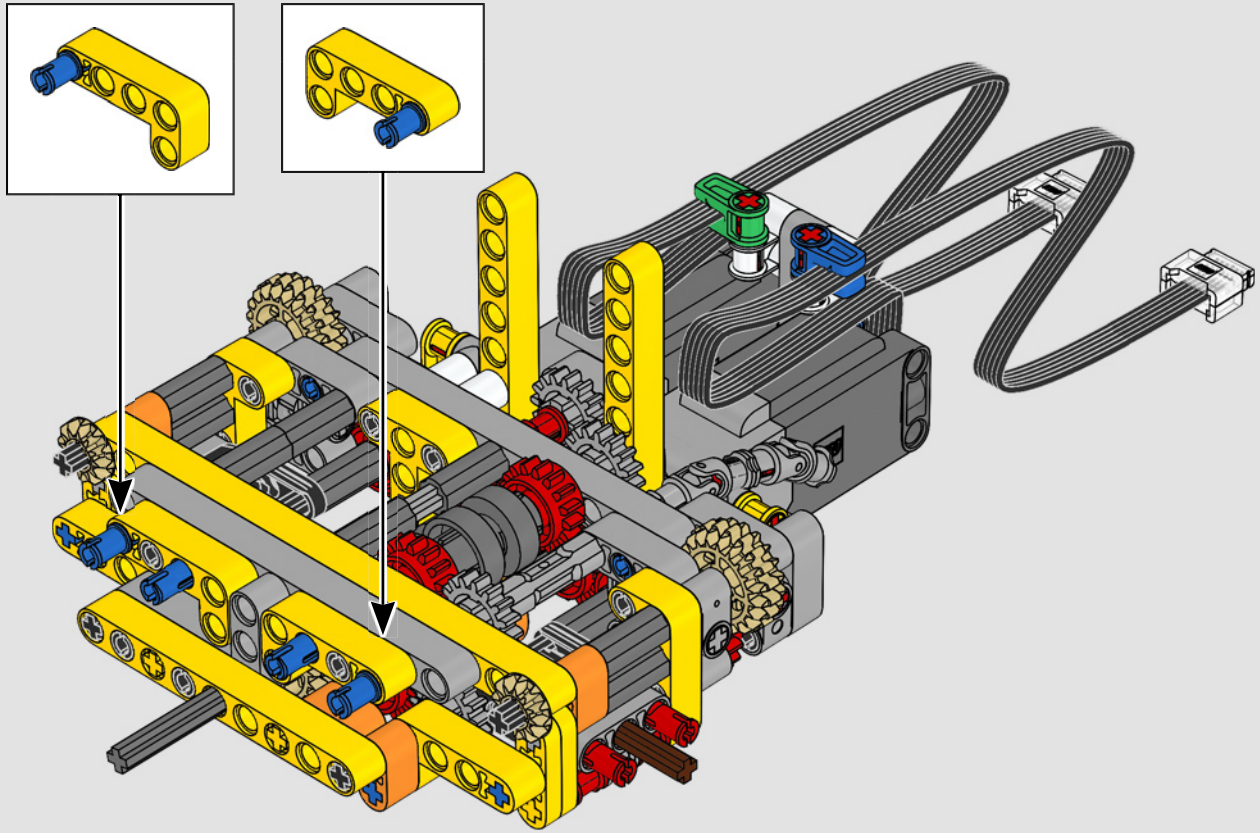

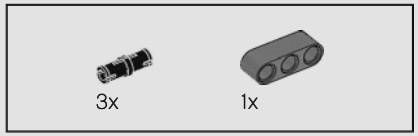

129

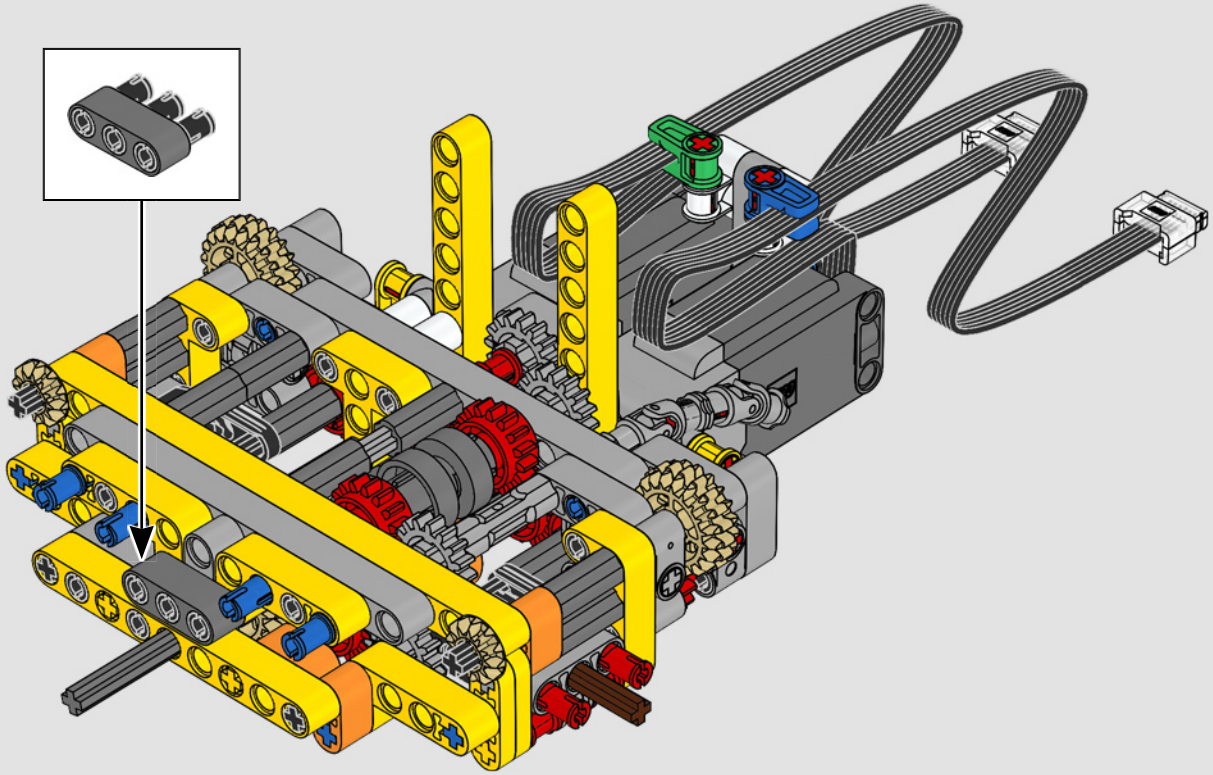

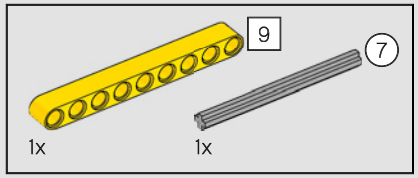

130

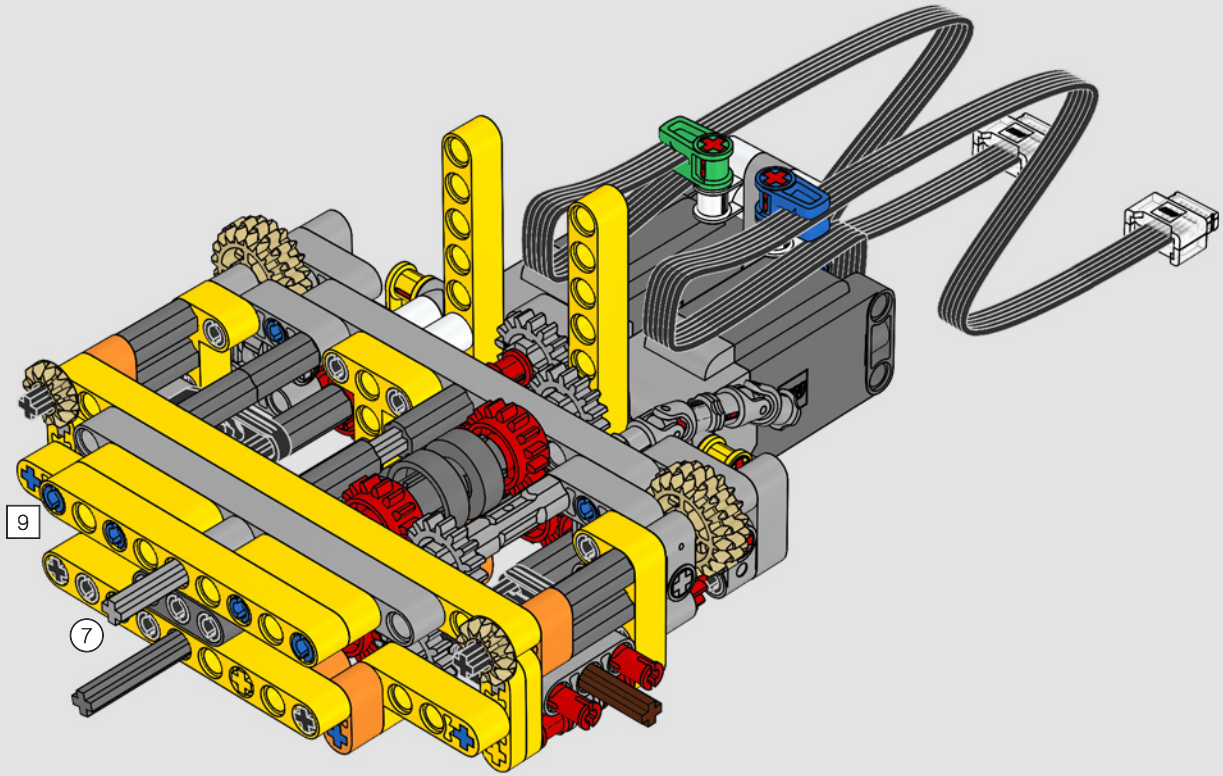

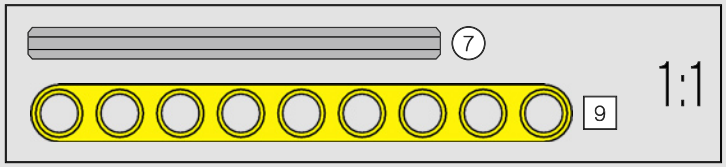

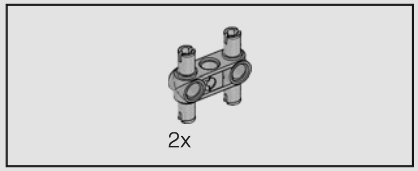

131

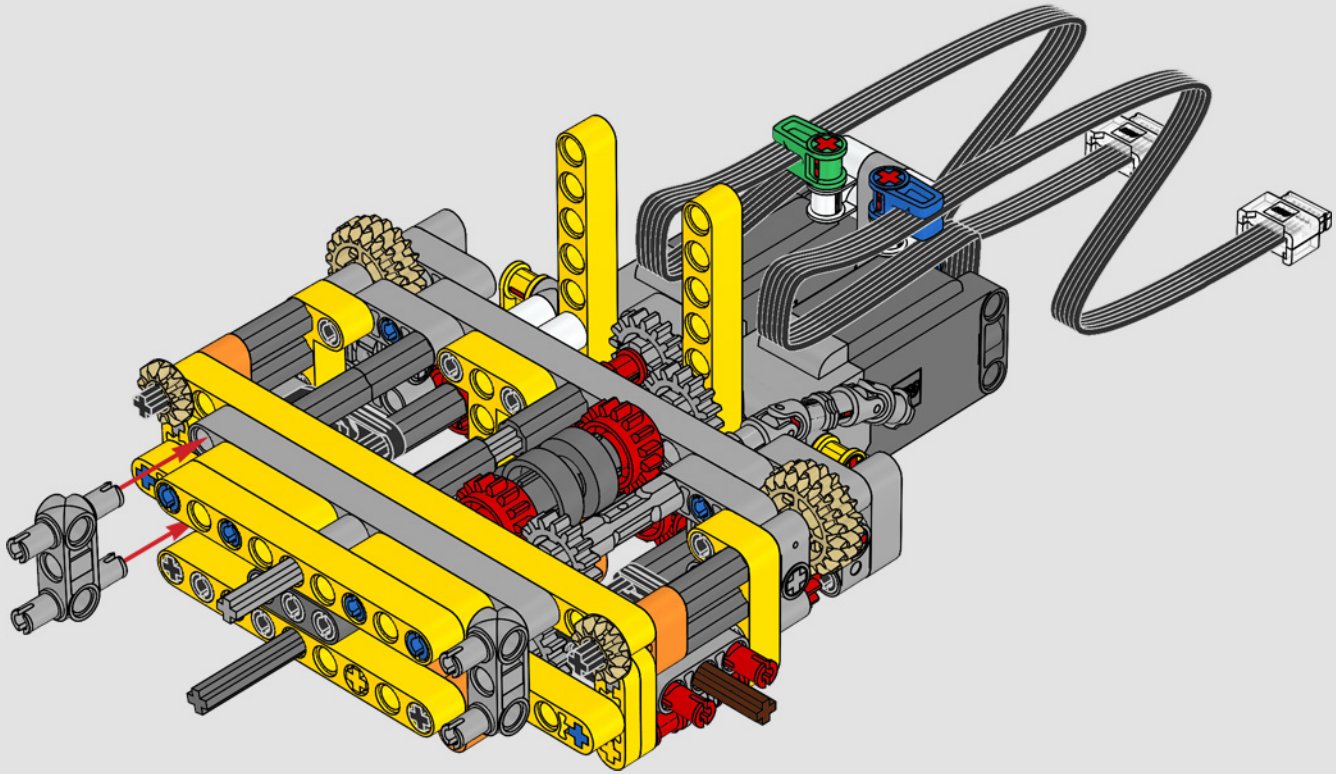

132

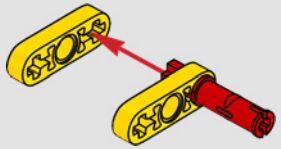

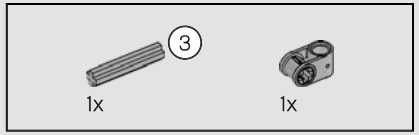

133

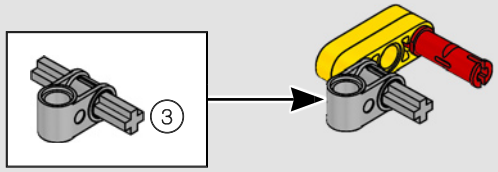

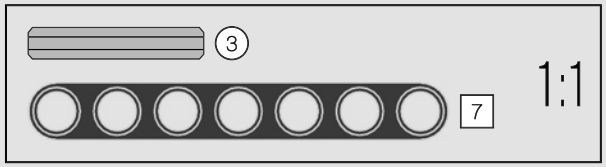

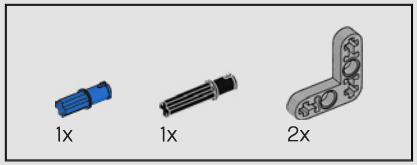

134

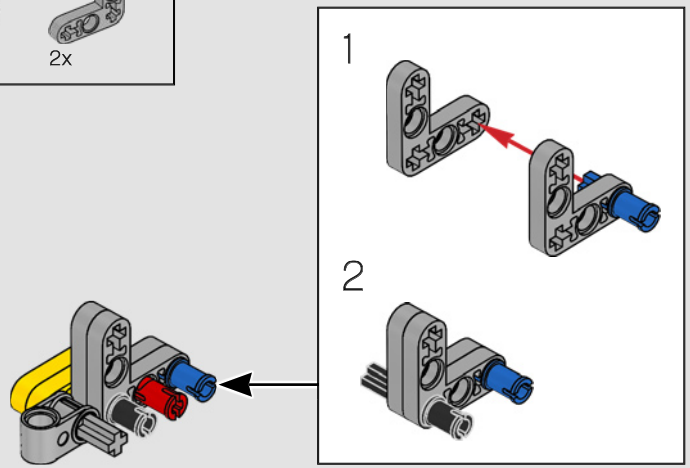

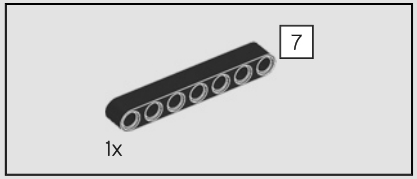

135

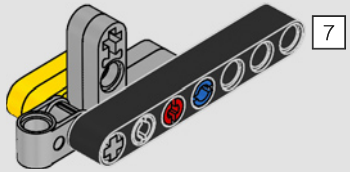

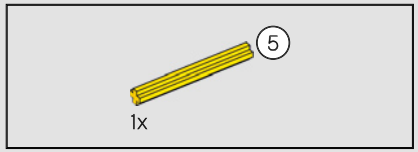

136

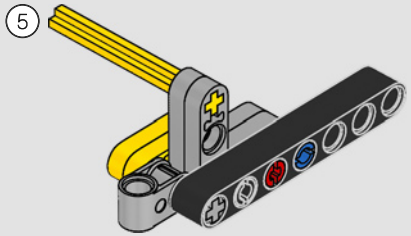

137

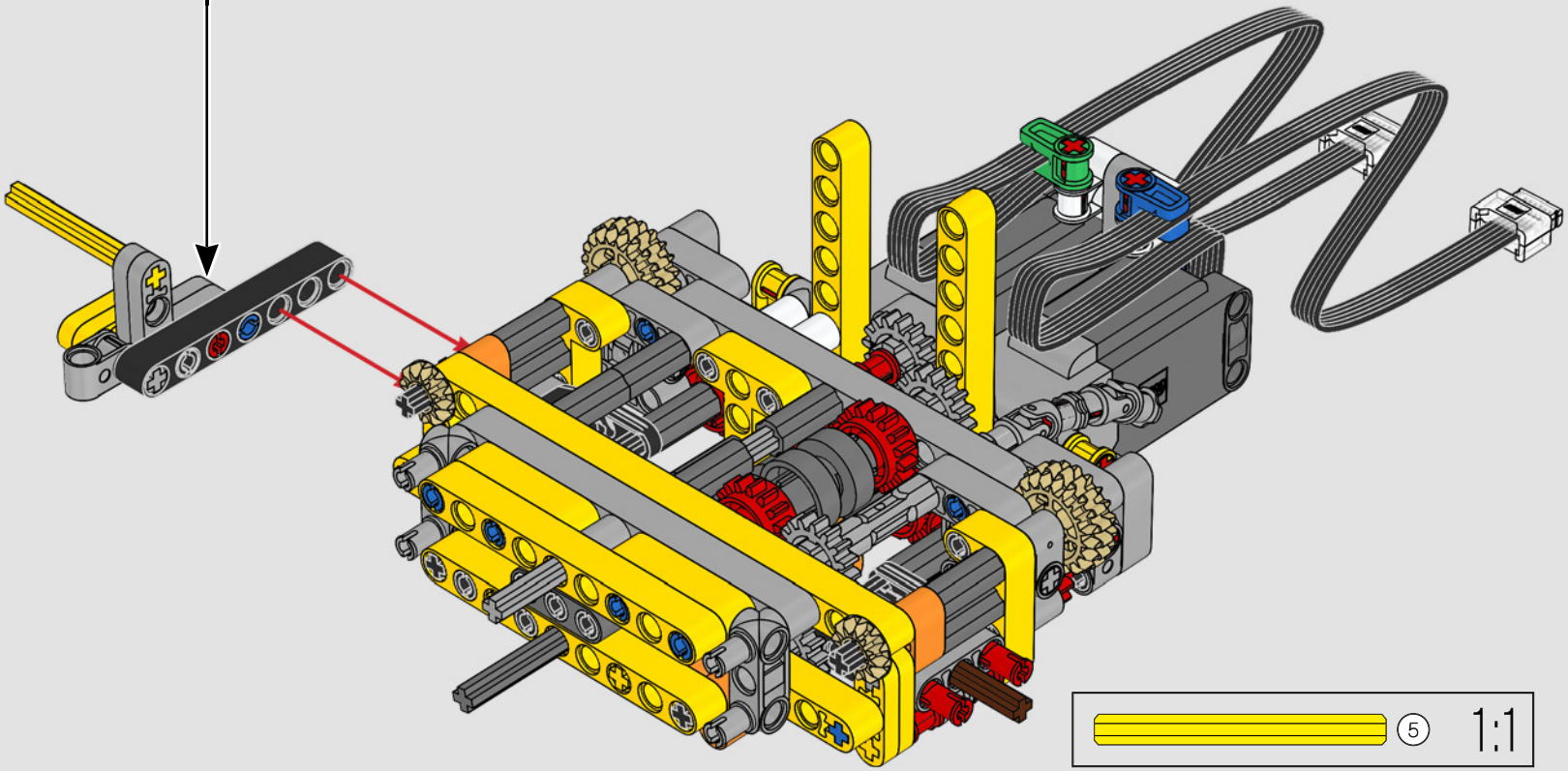

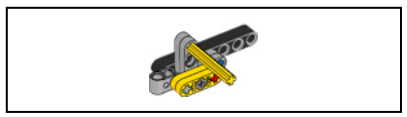

138

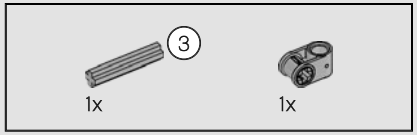

139

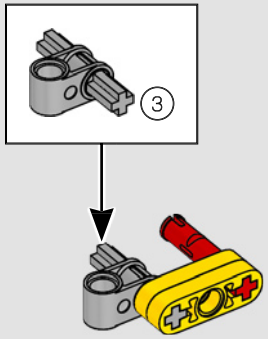

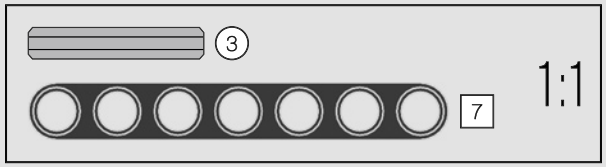

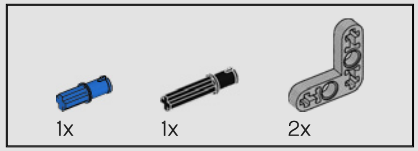

140

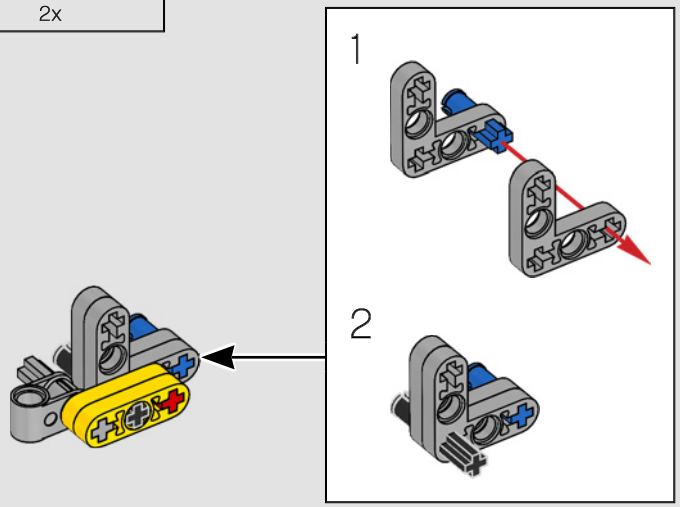

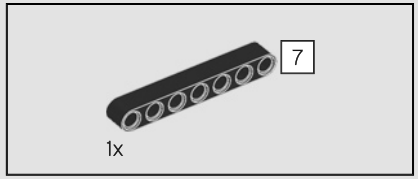

141

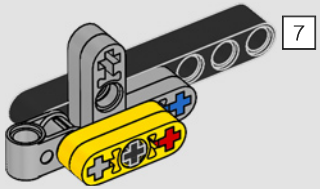

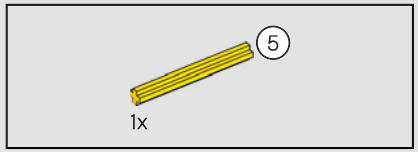

142

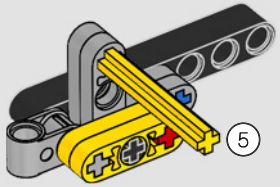

143

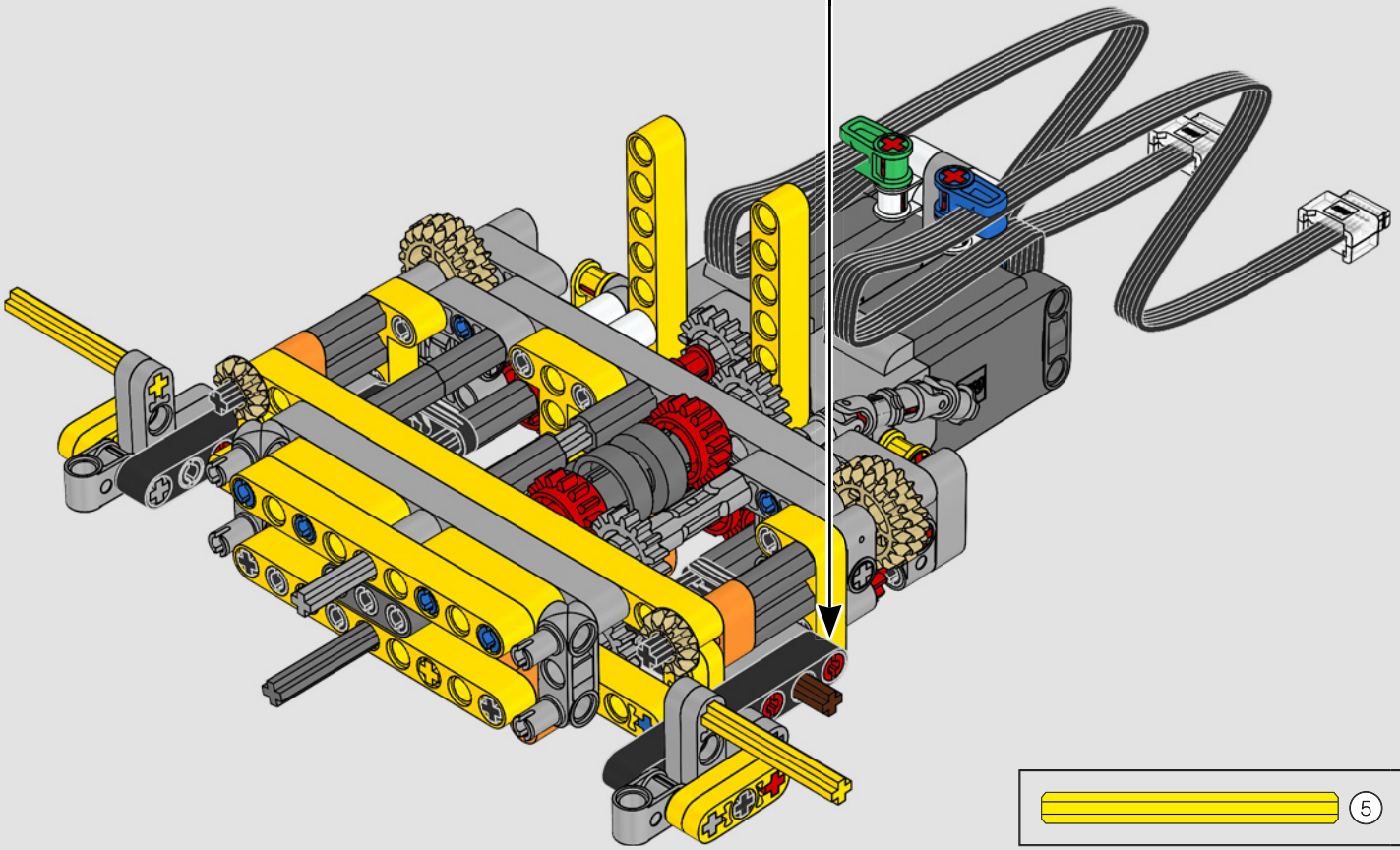

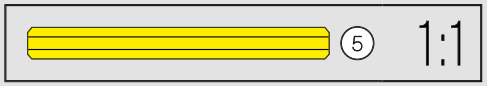

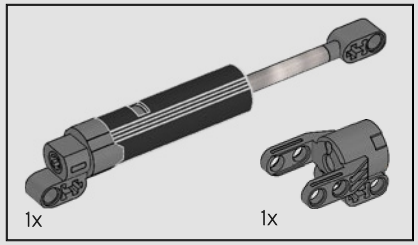

144

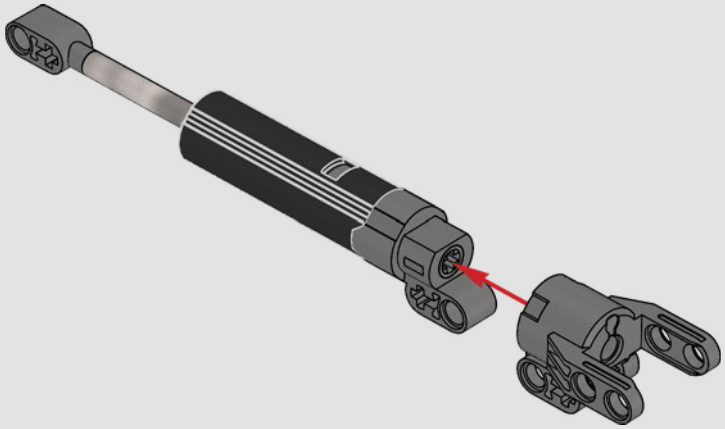

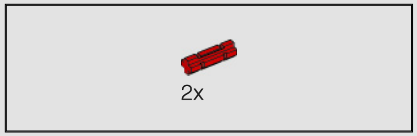

145

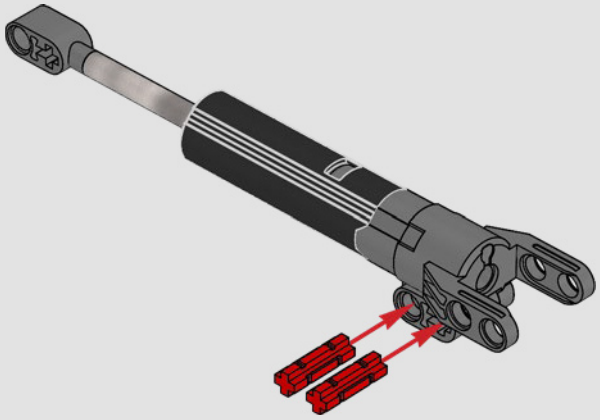

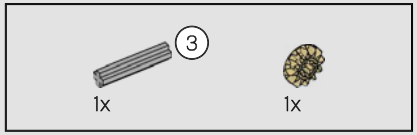

146

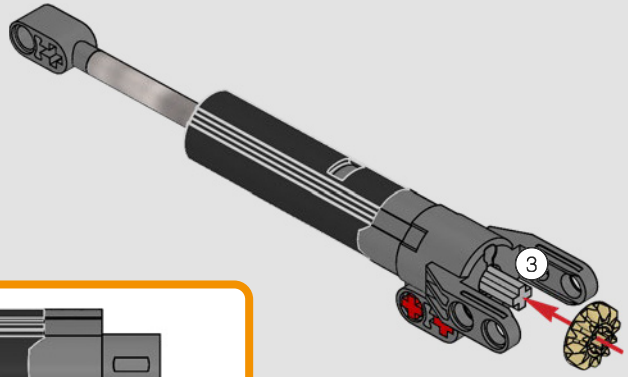

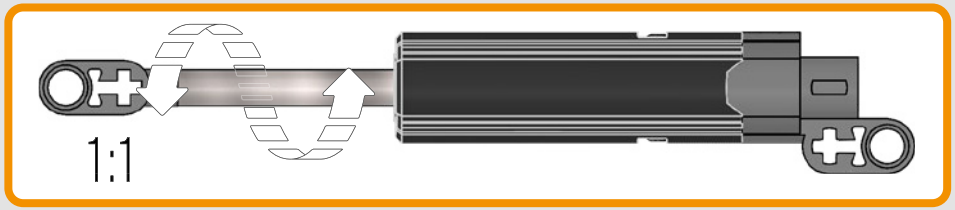

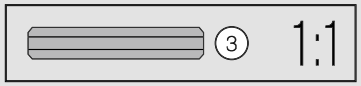

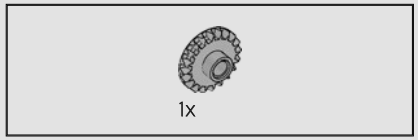

147

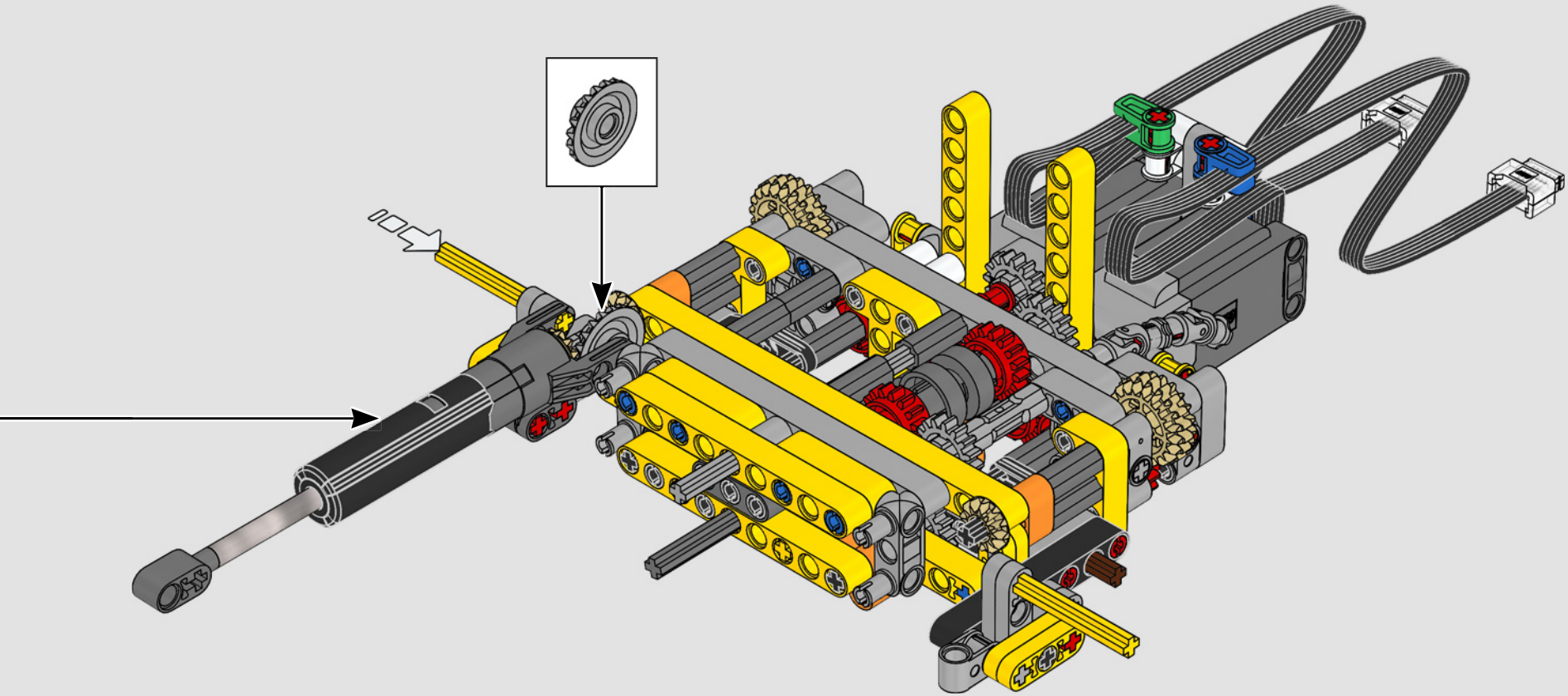

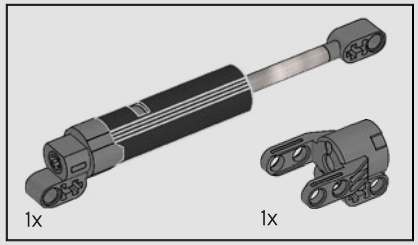

148

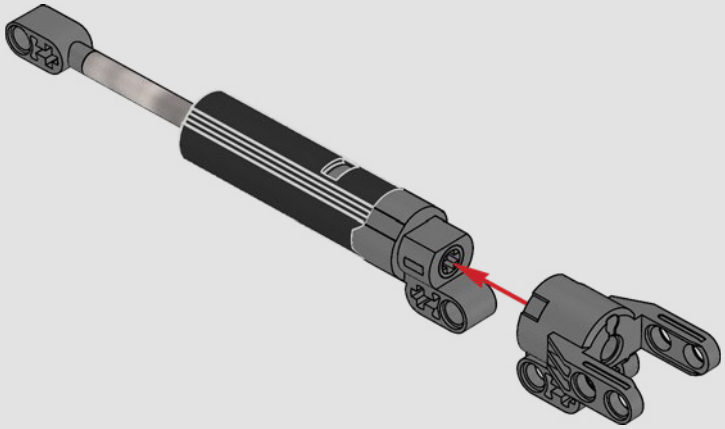

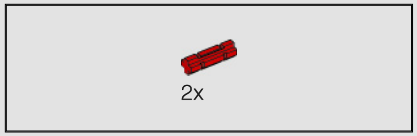

149

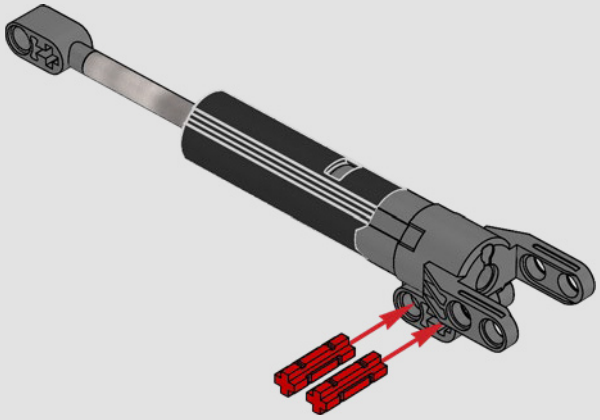

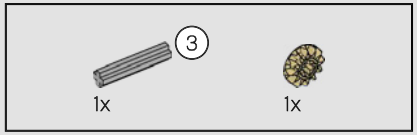

150

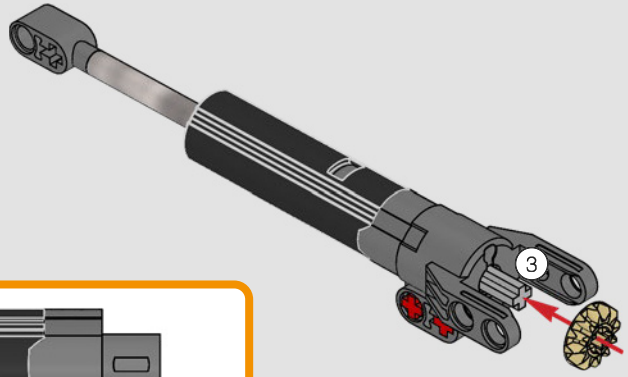

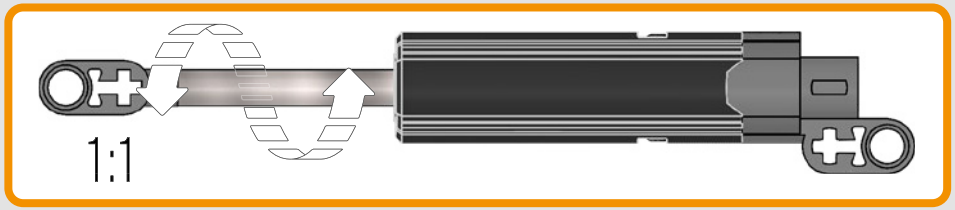

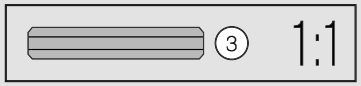

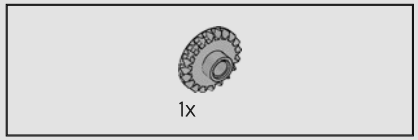

151

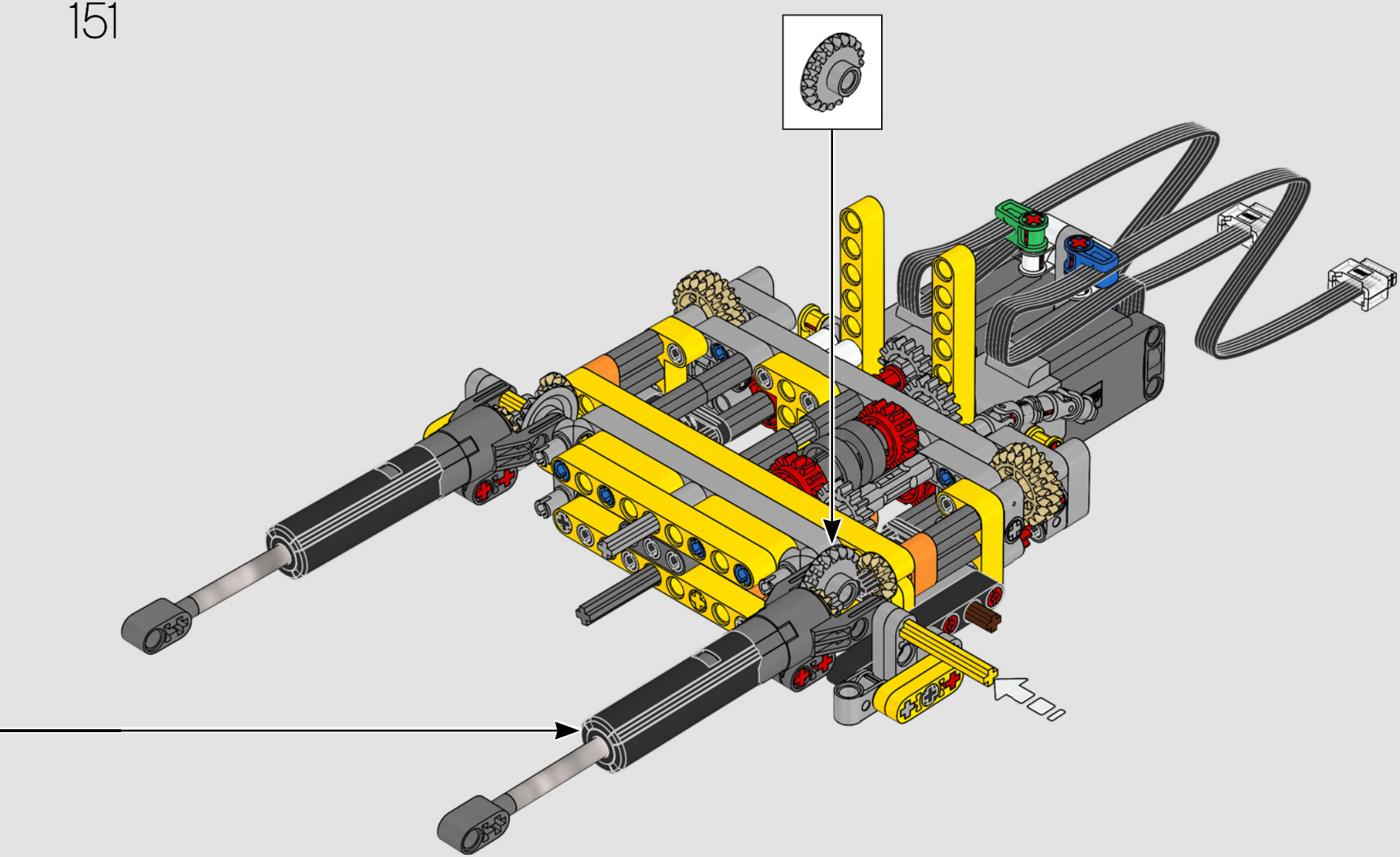

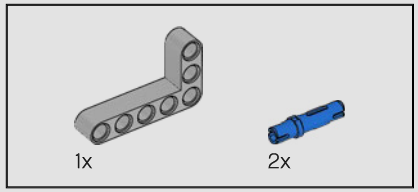

152

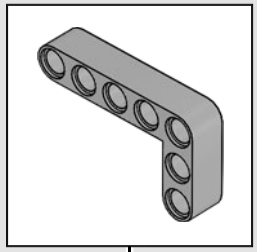

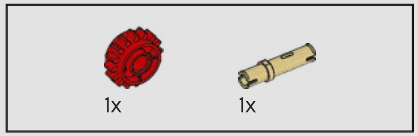

153

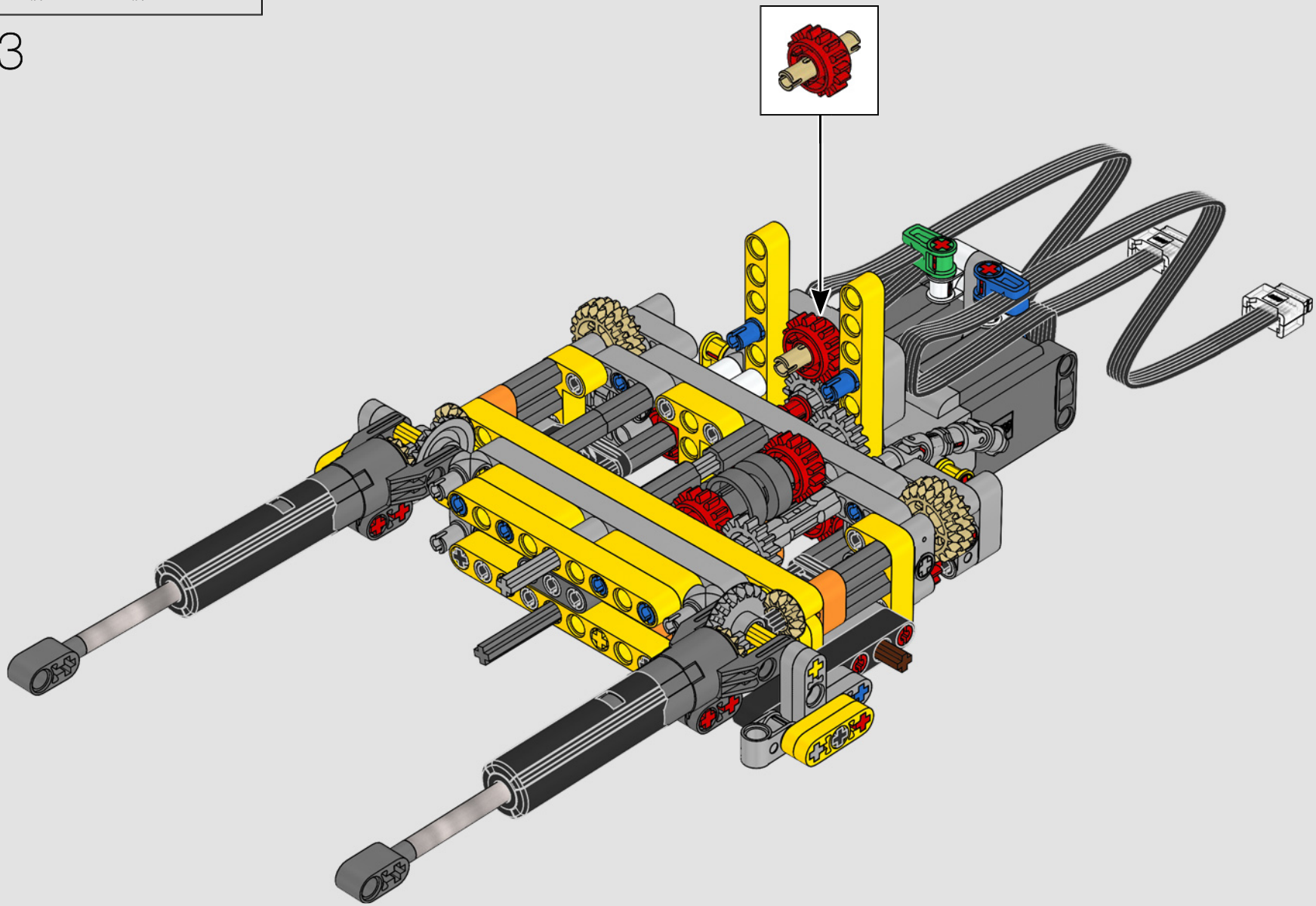

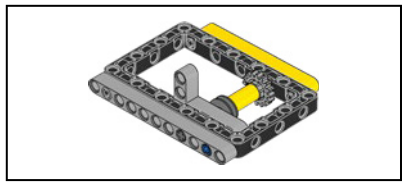

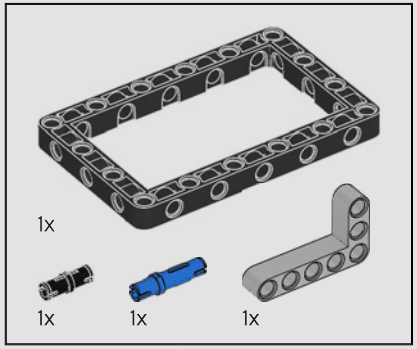

154

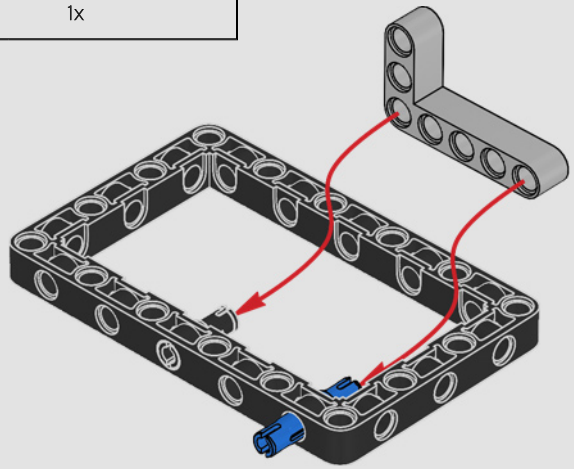

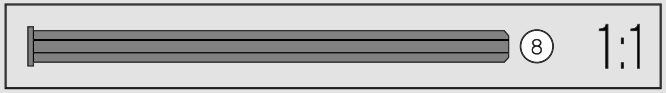

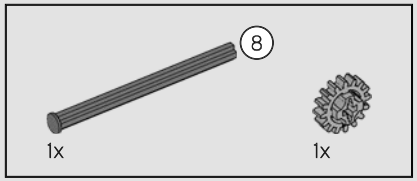

155

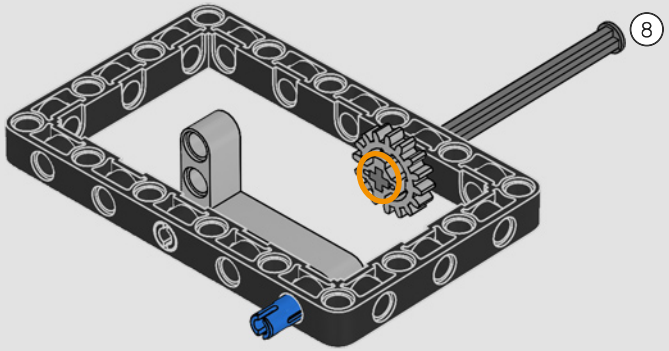

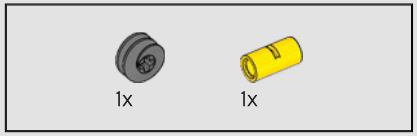

156

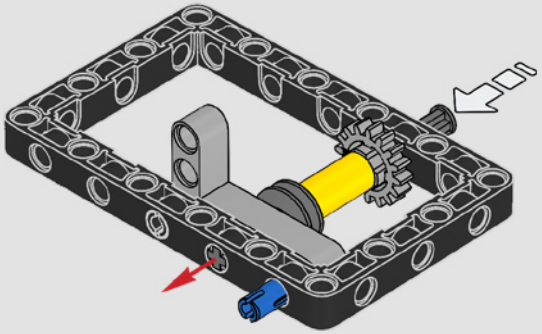

157

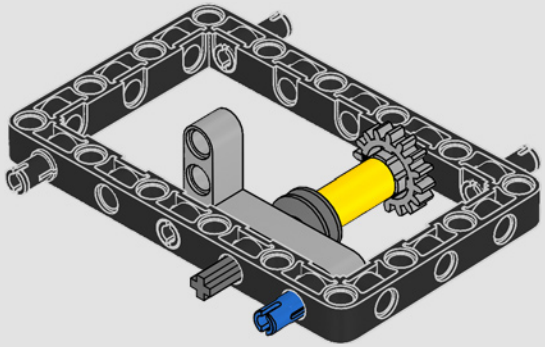

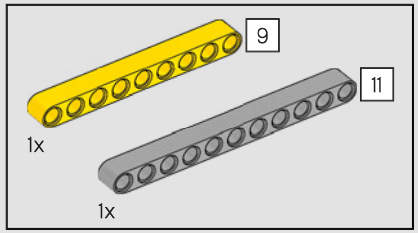

158

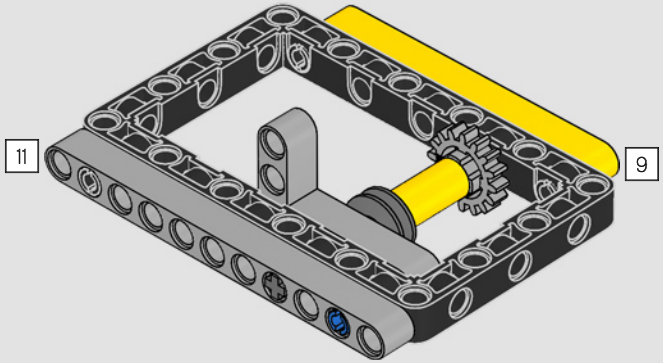

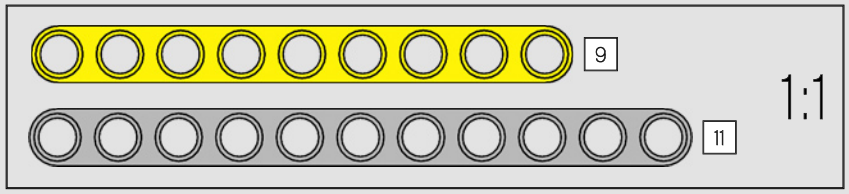

159

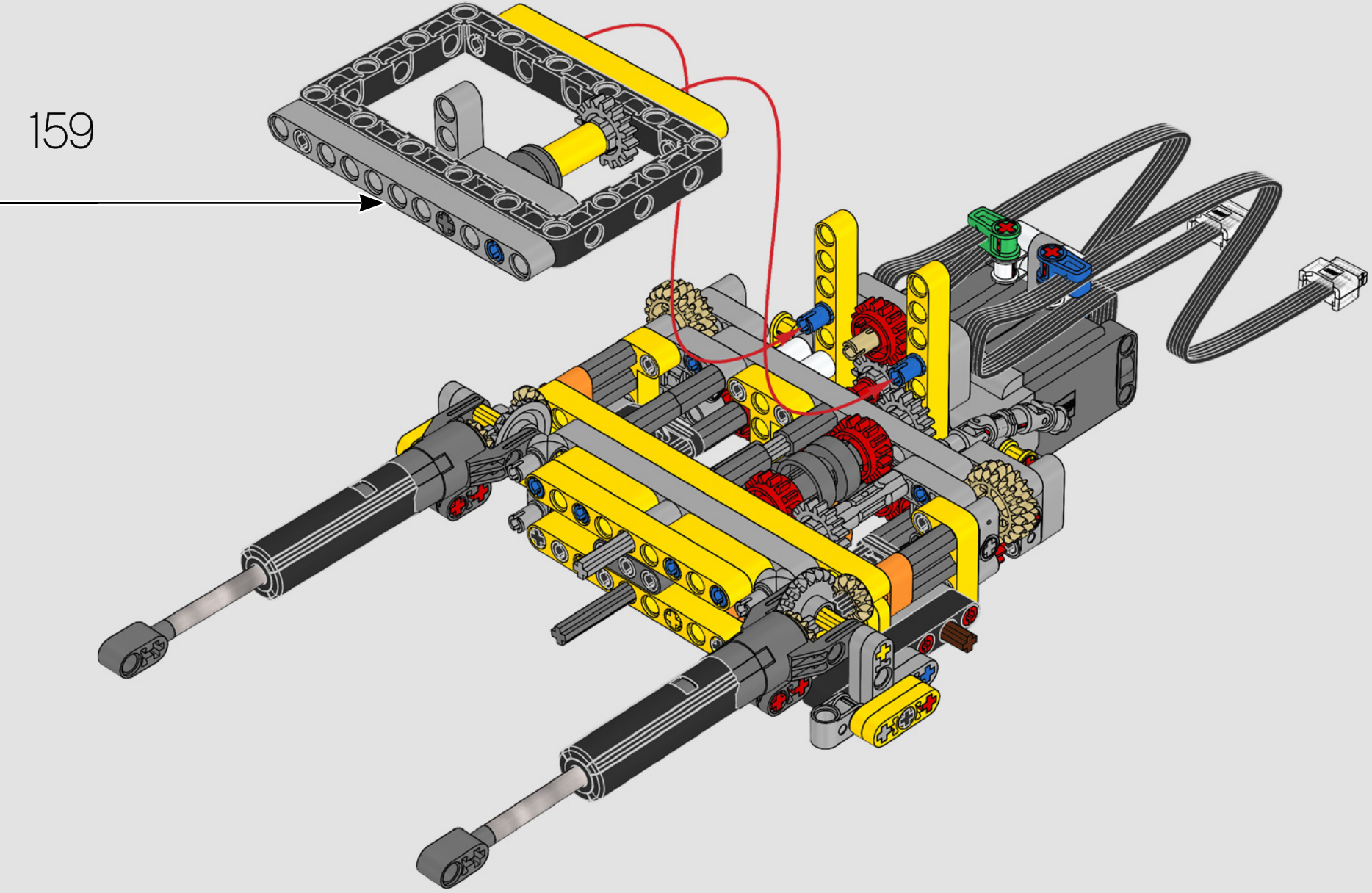

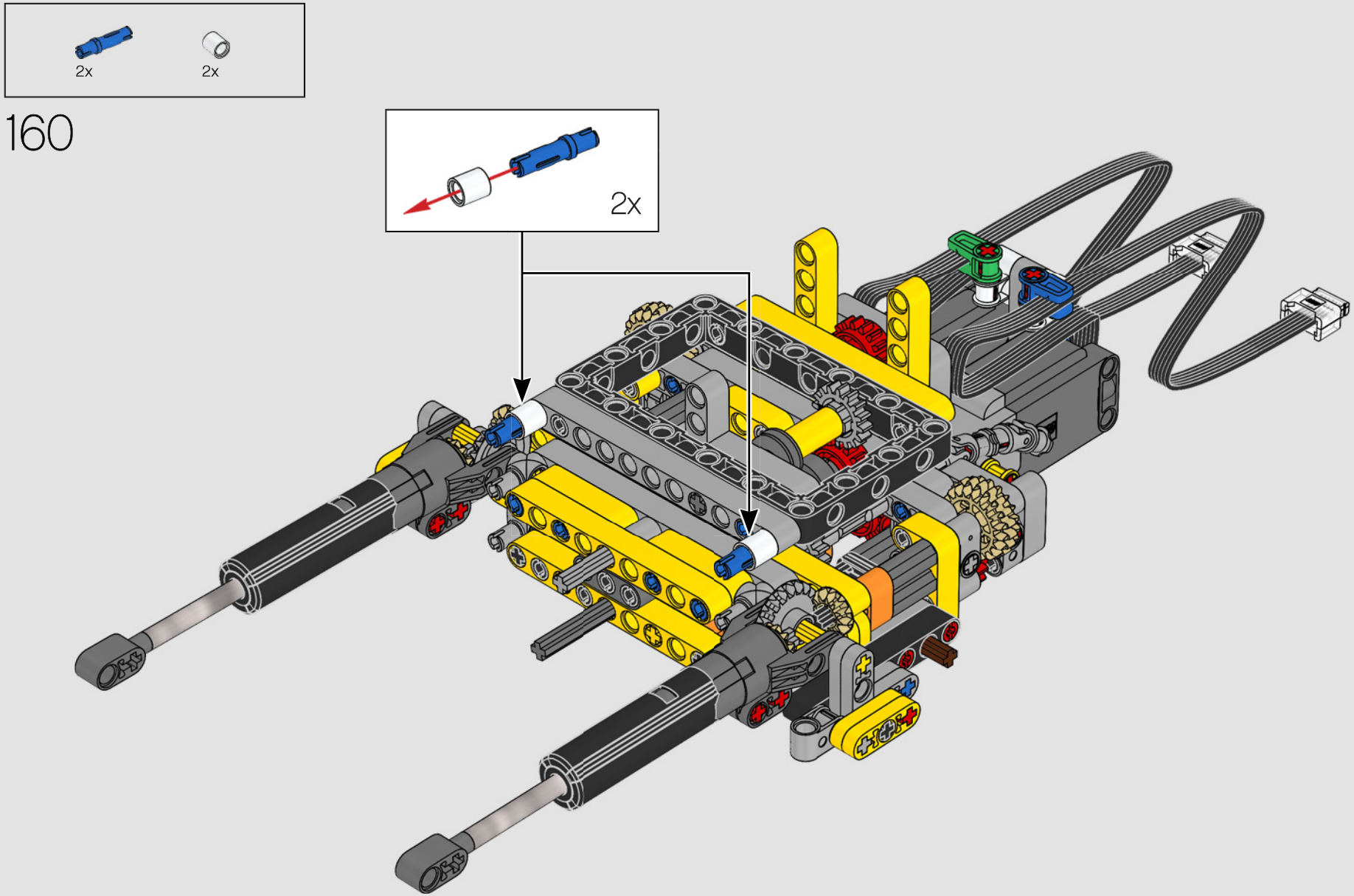
2x
2x
160
2x

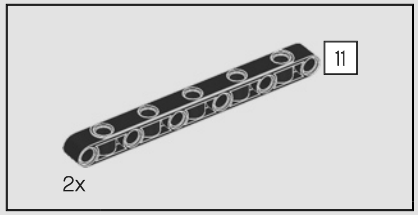

161

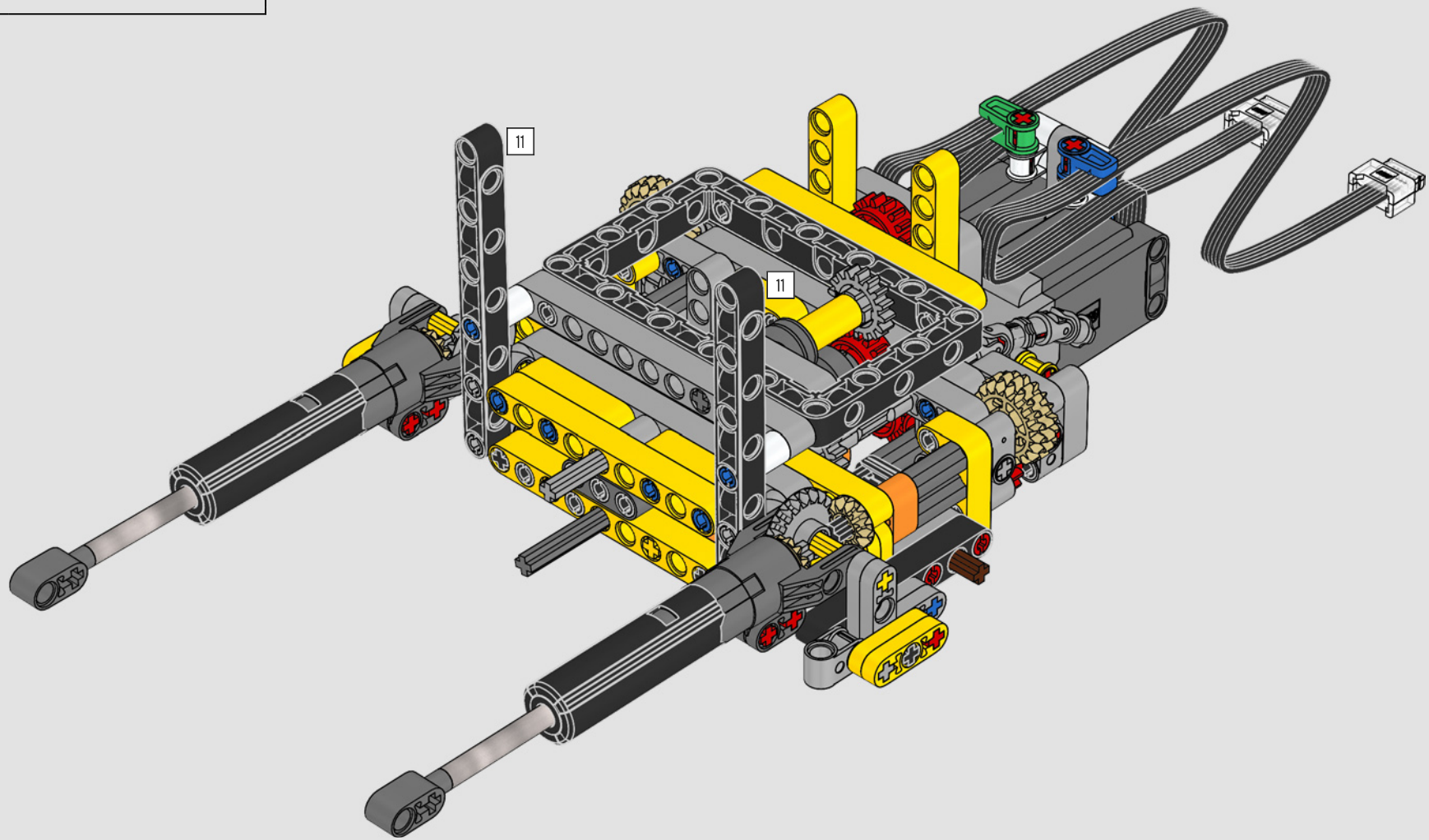

2x

162

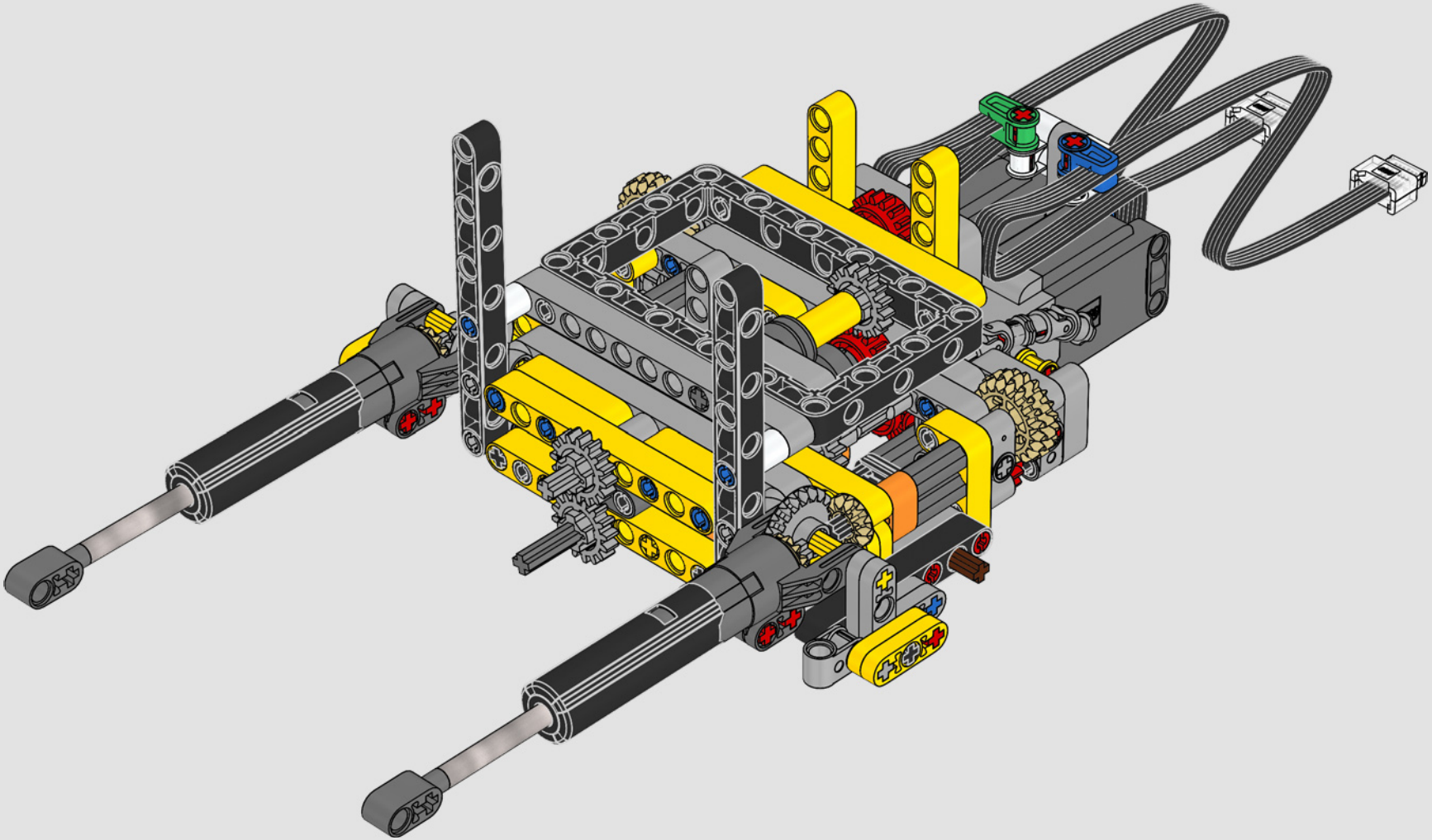

163

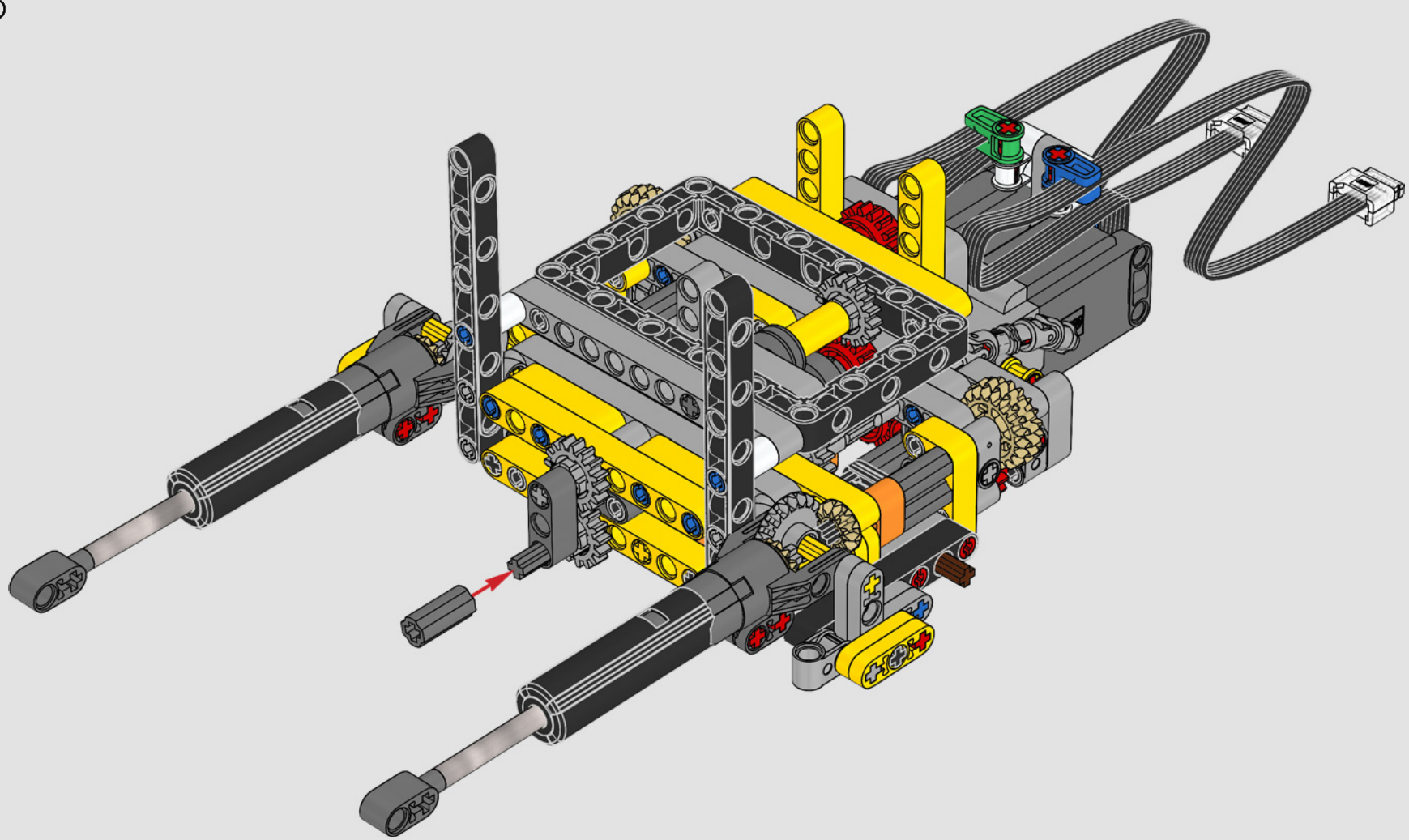

164

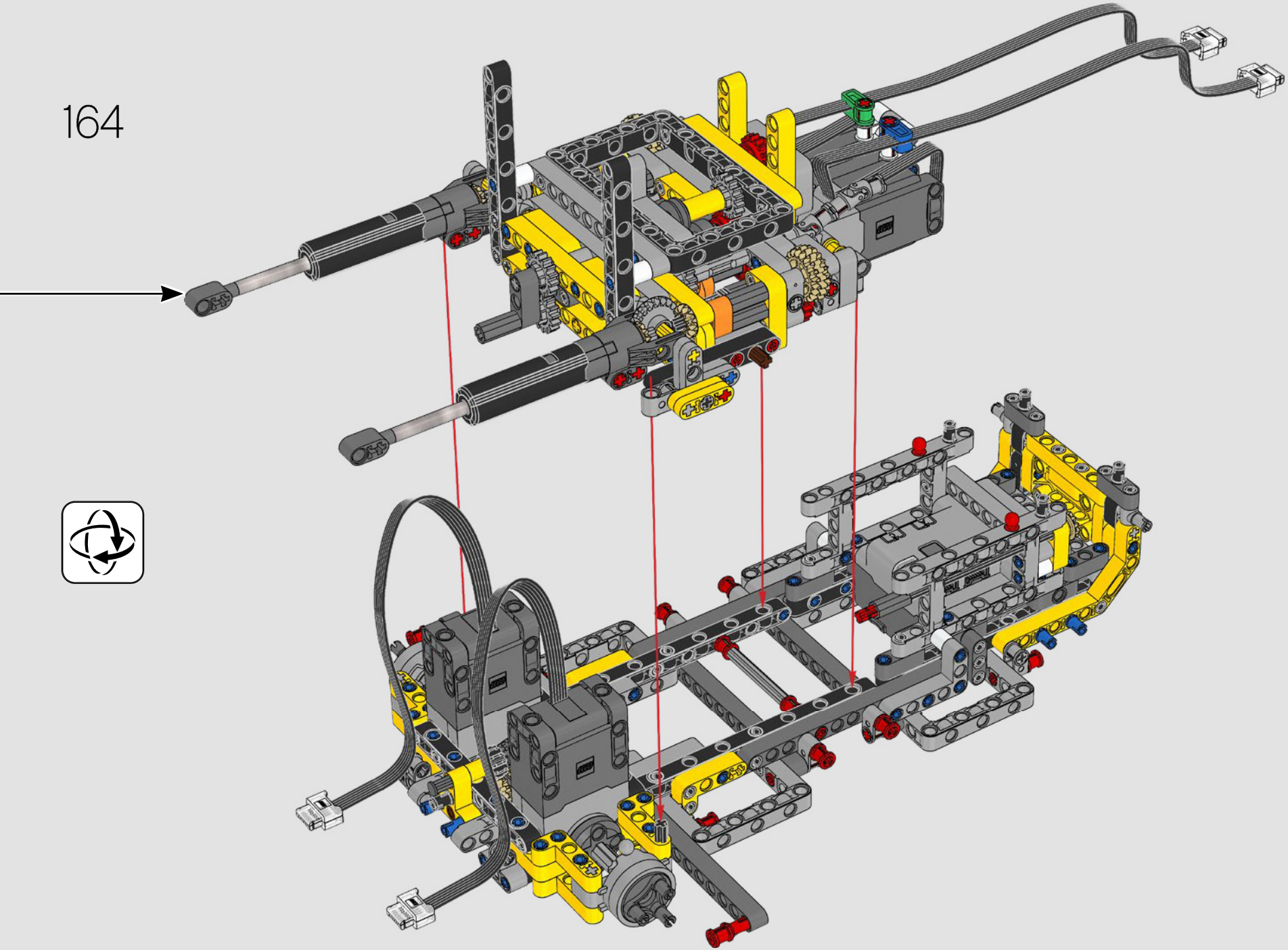

165

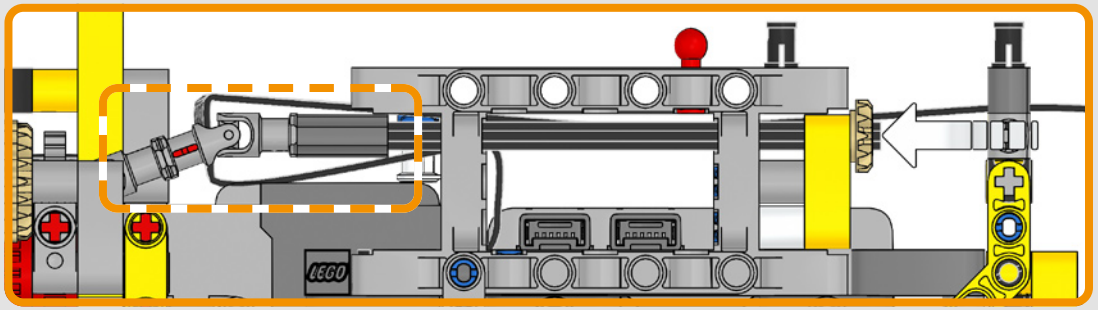

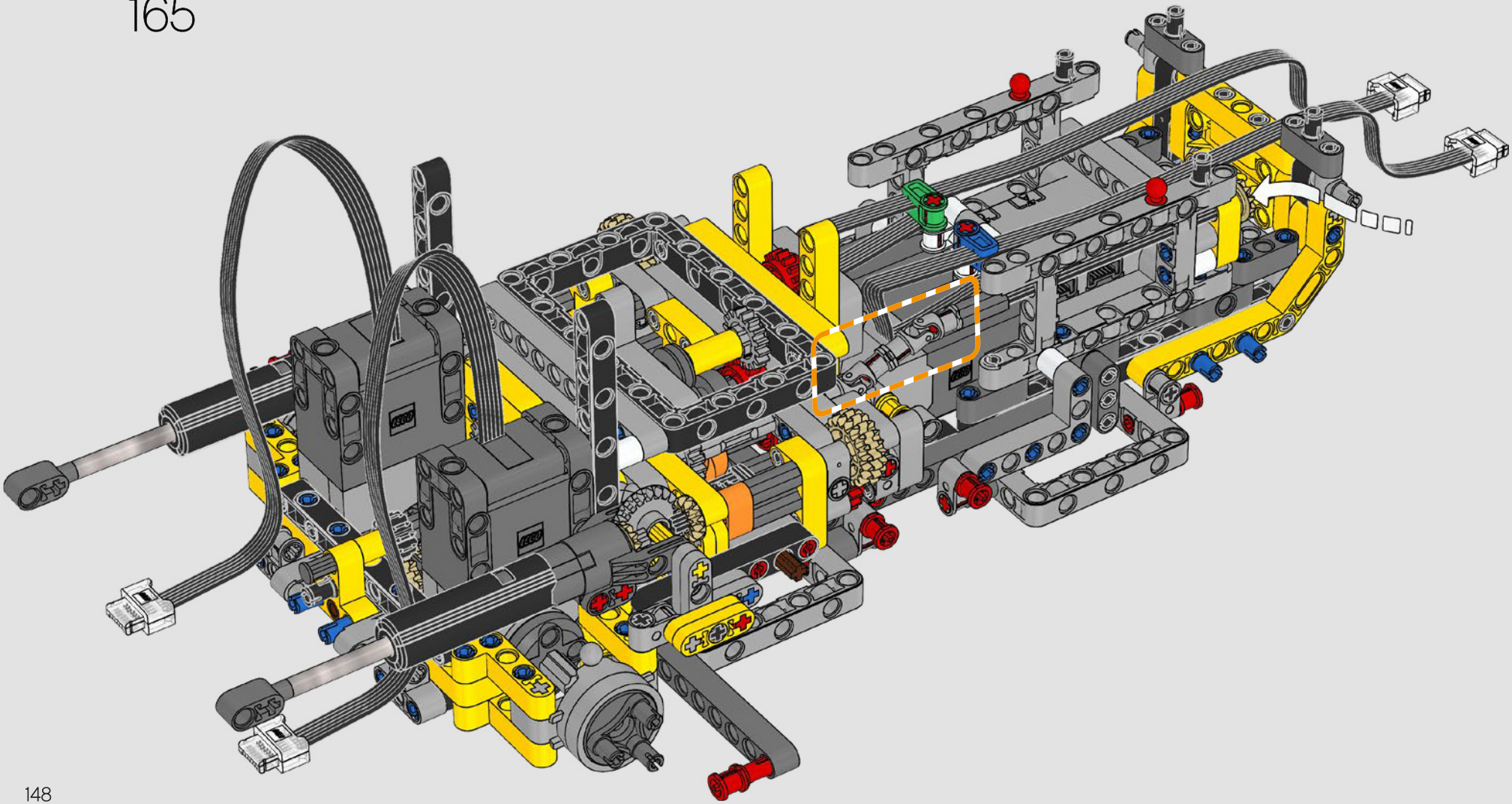

166

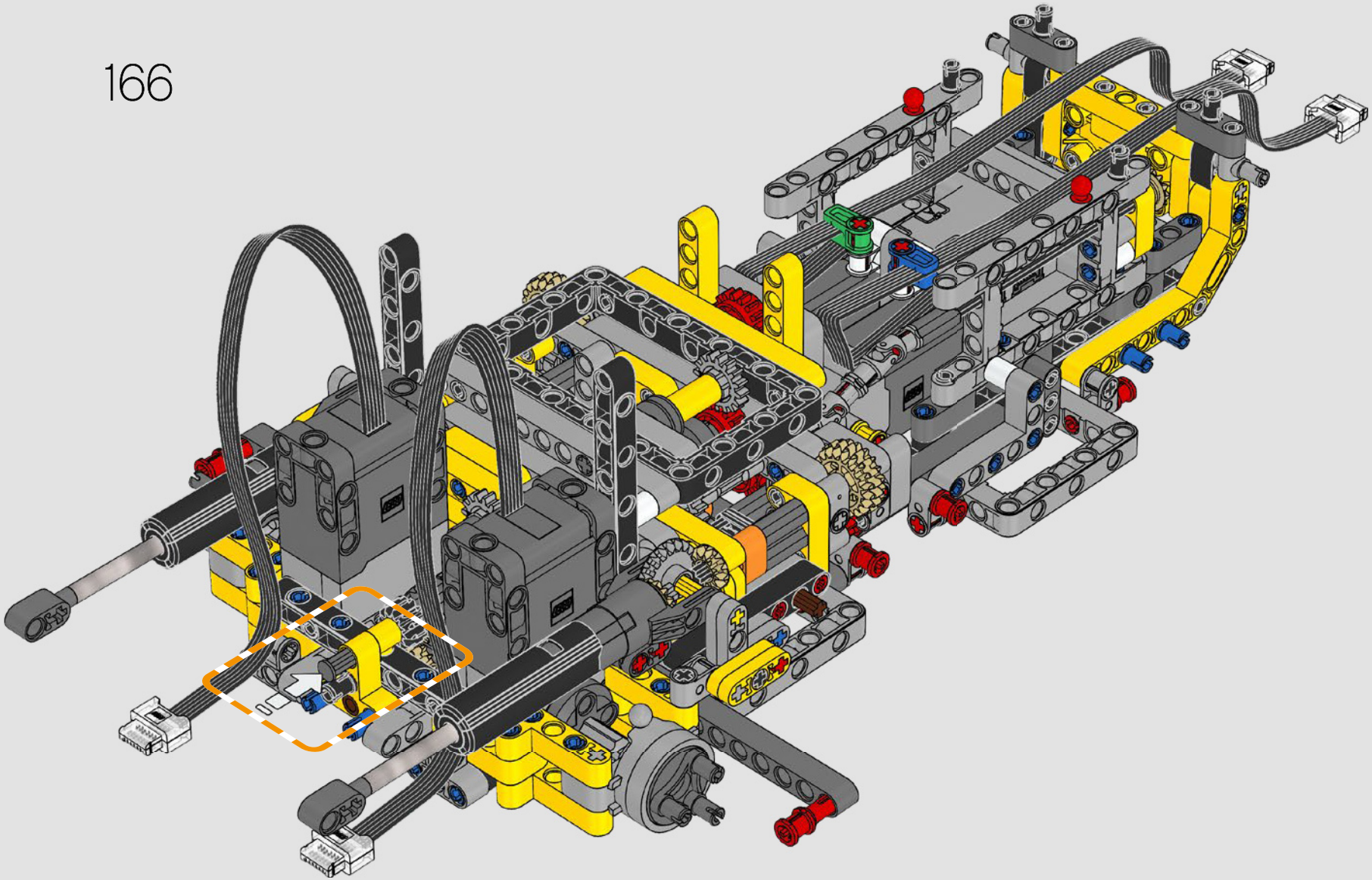

1x

167

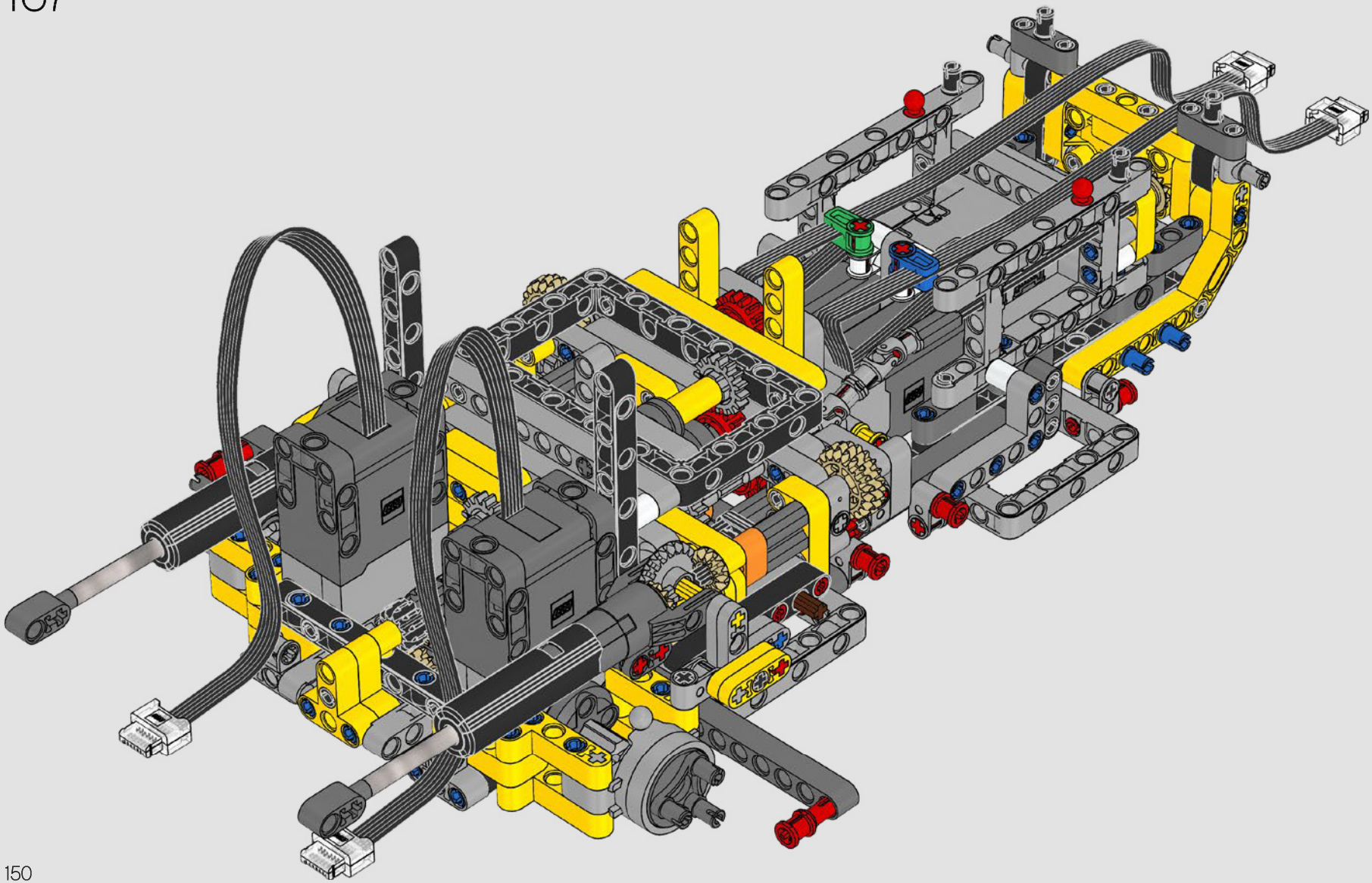

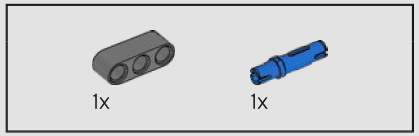

168

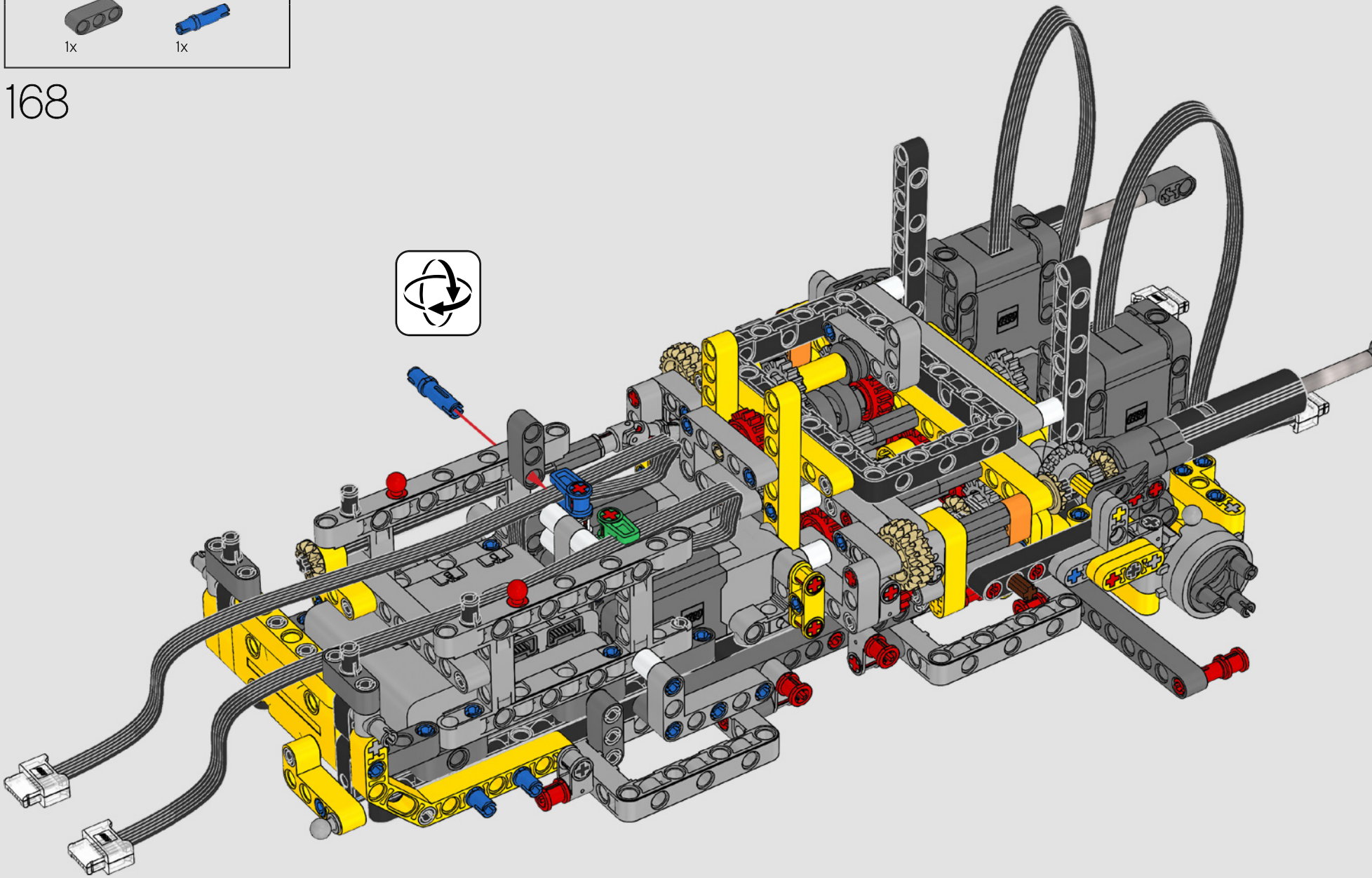

169

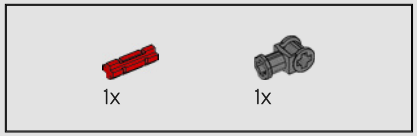

170

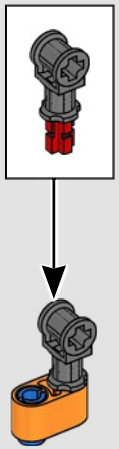

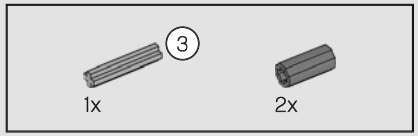

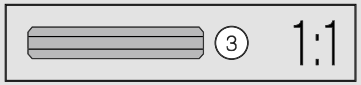

171

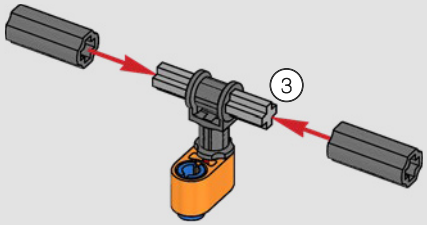

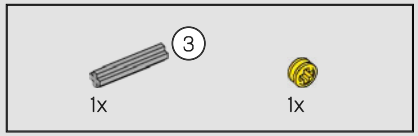

172

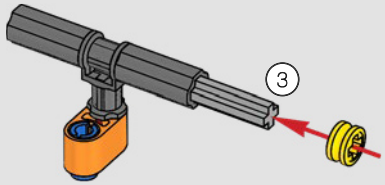

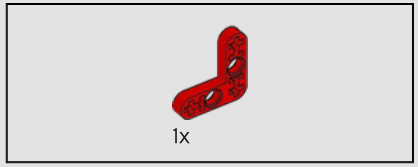

173

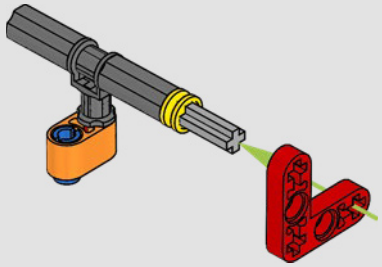

174

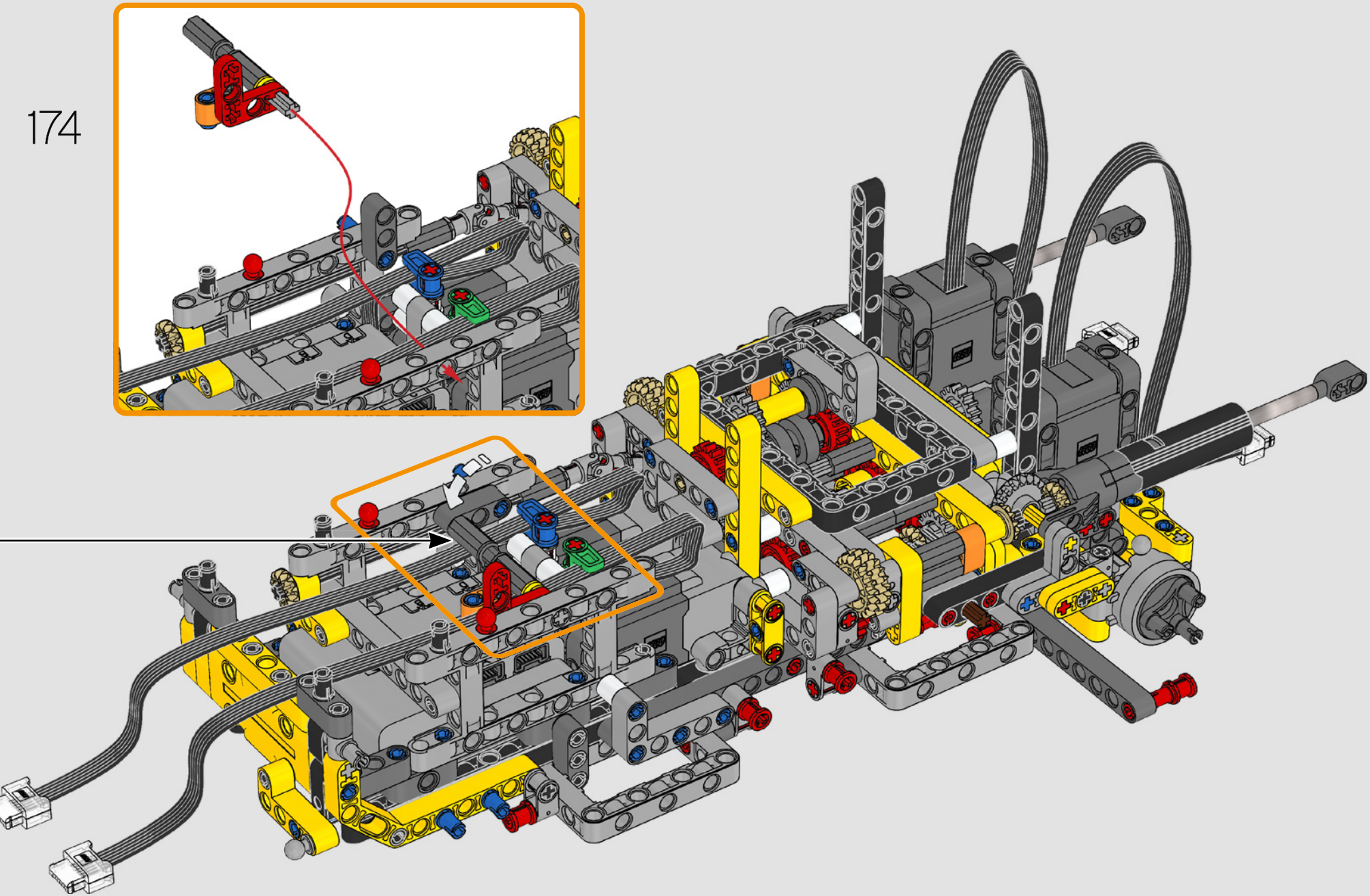

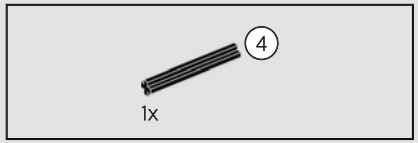

175

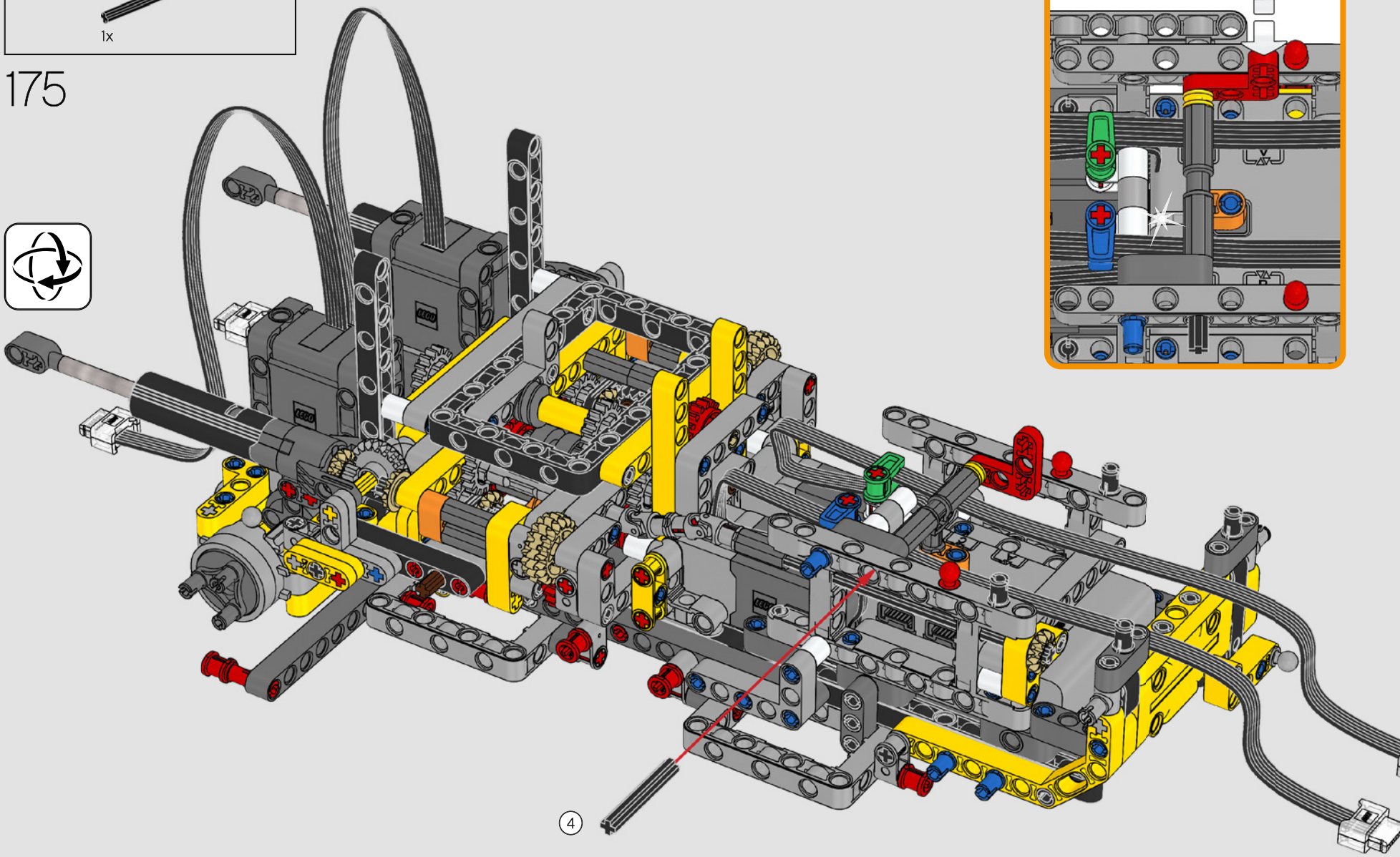

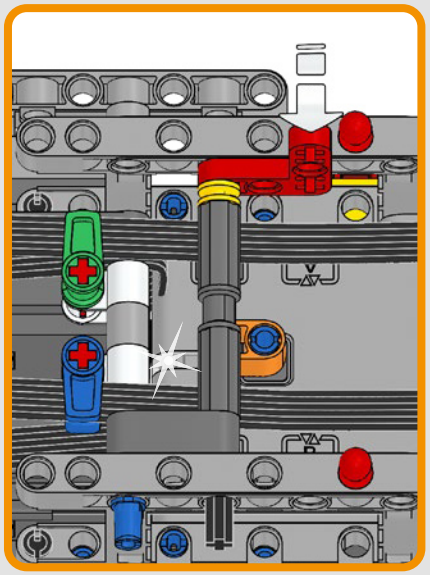

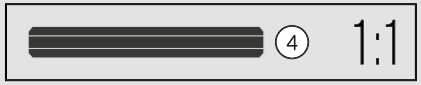

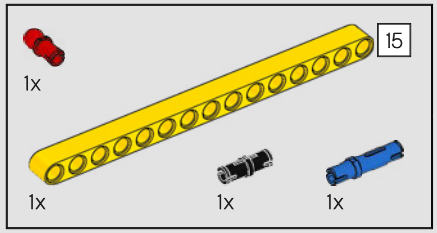

176

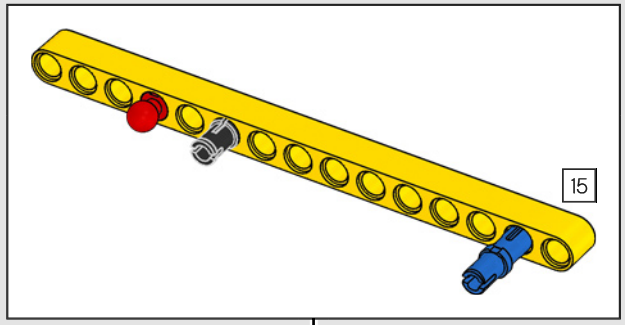

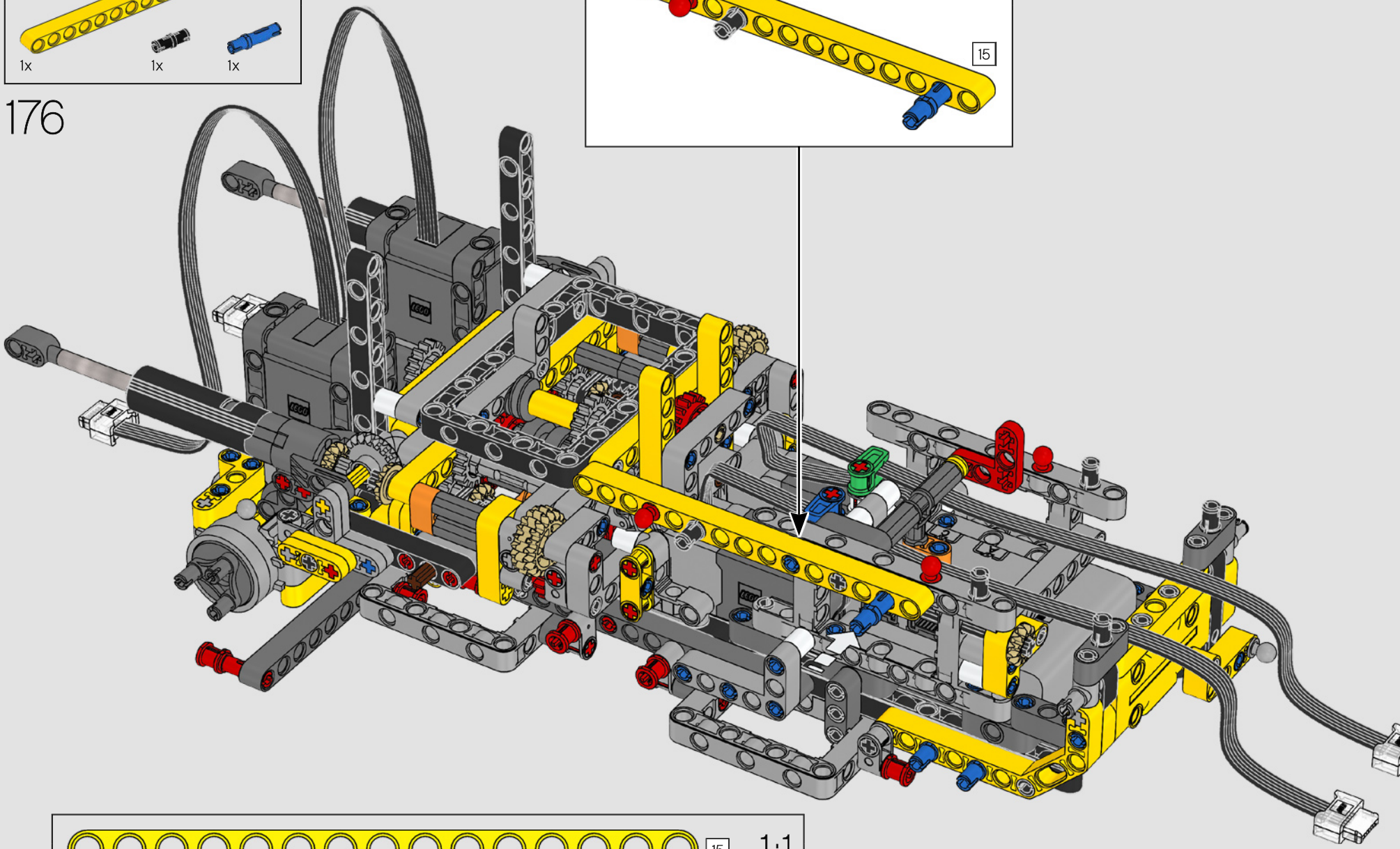

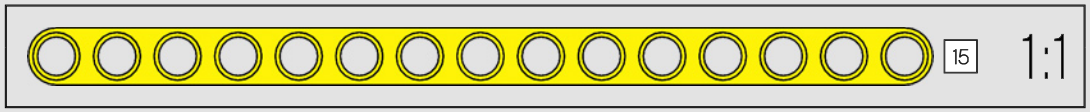

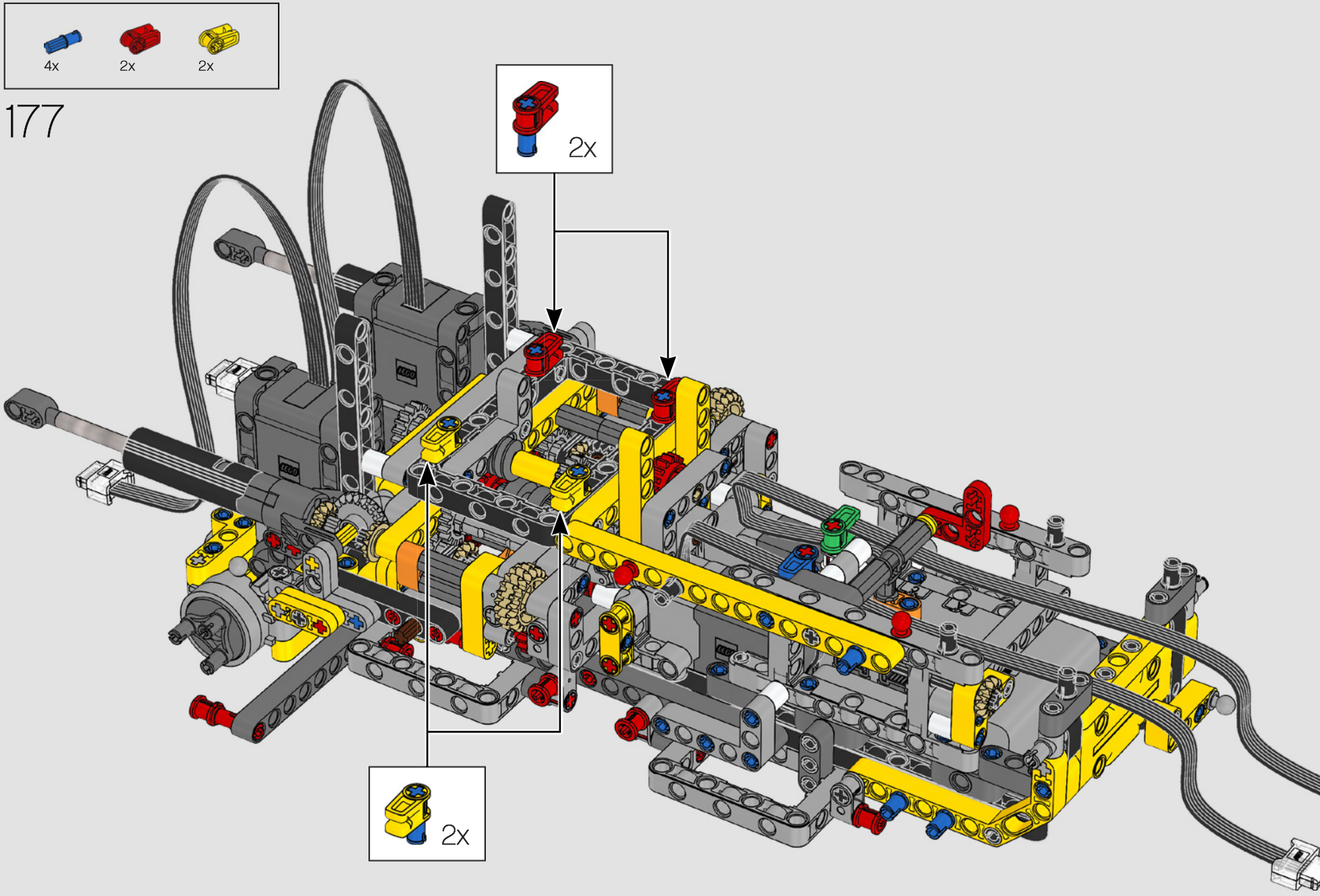
4x
2x
2x
177
2x
2x

178

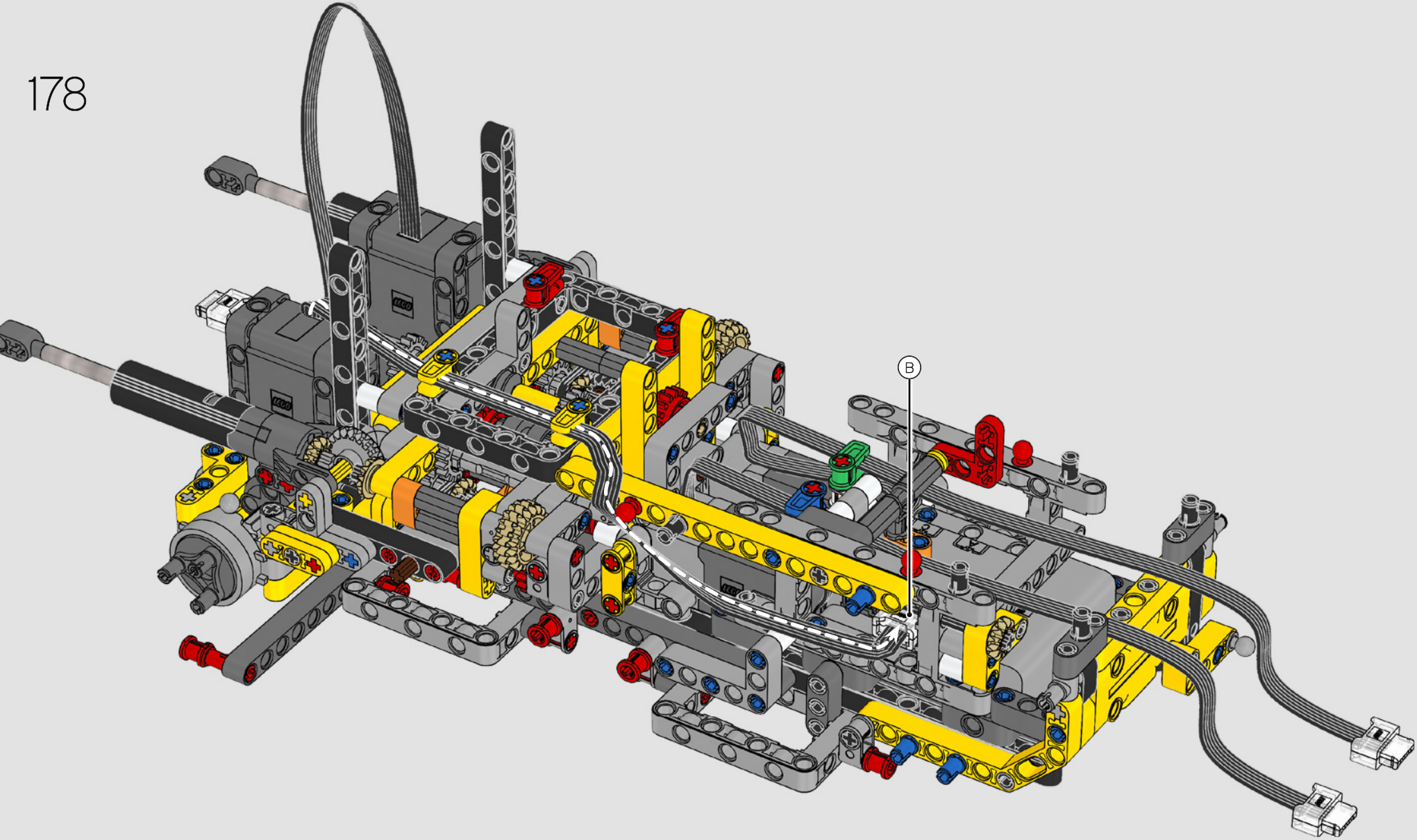

179

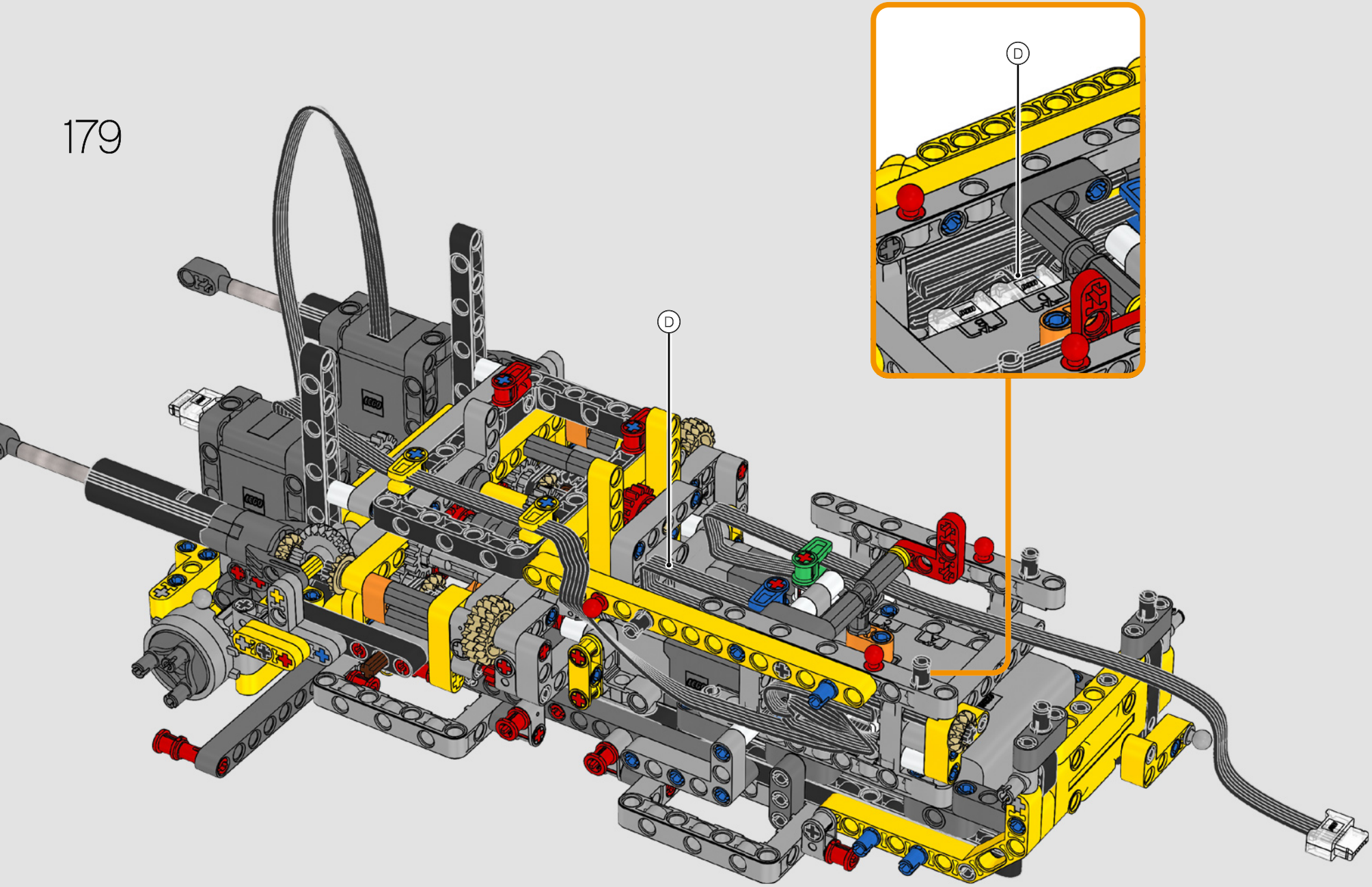

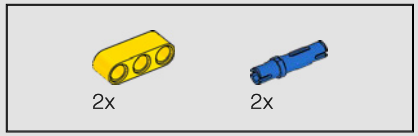

180

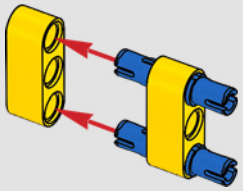

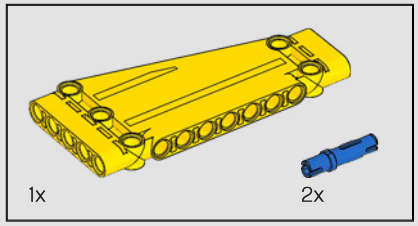

181

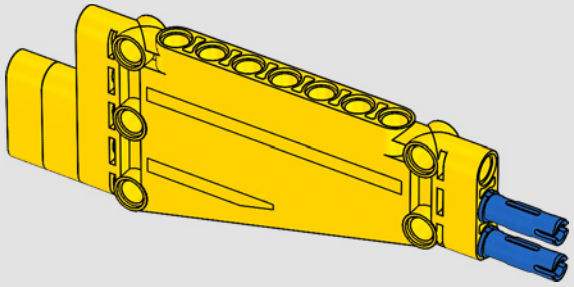

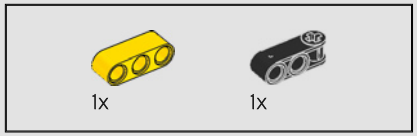

182

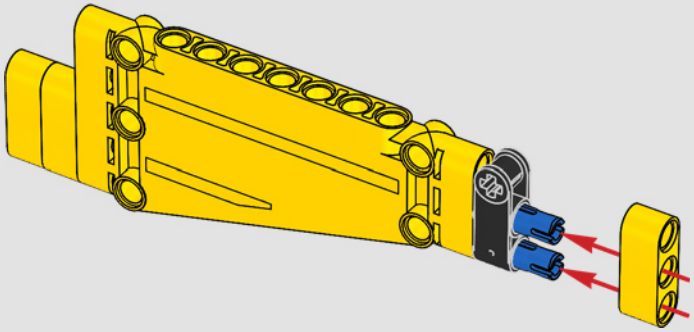

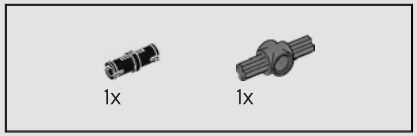

183

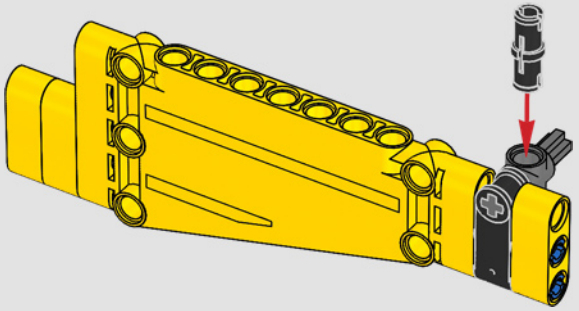

184

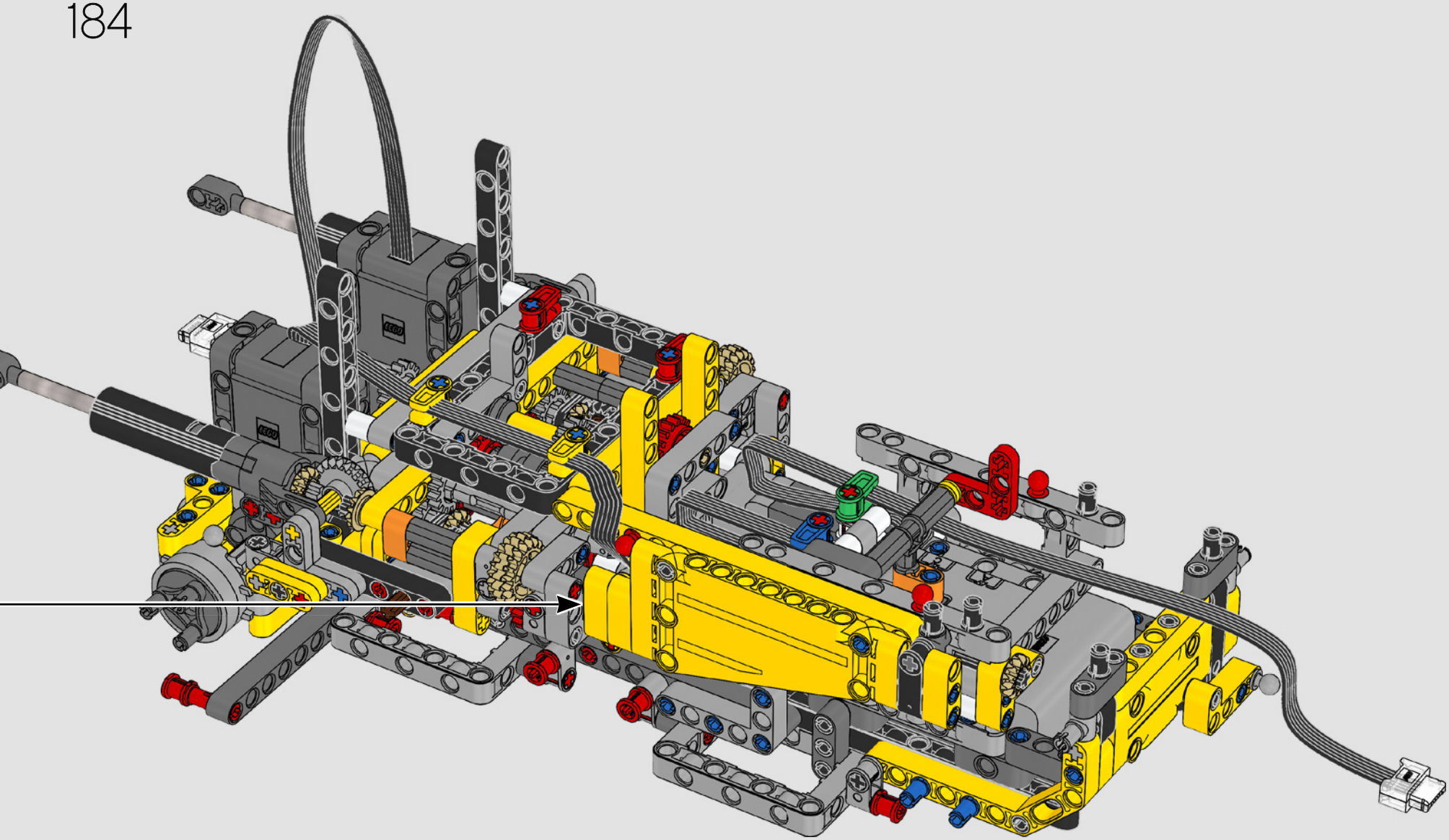

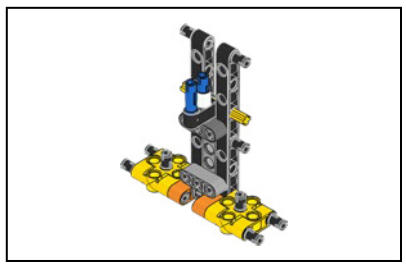

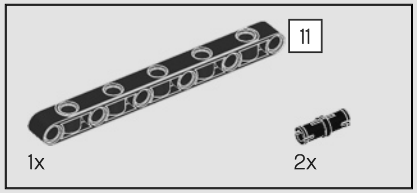

185

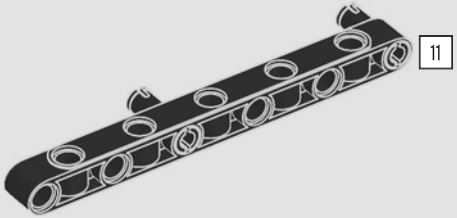

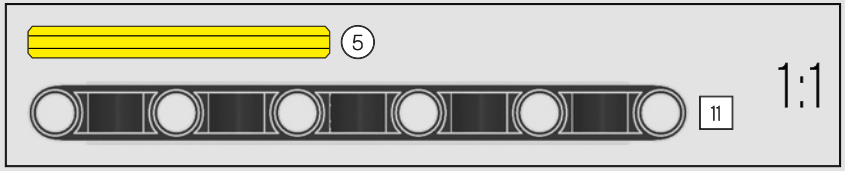

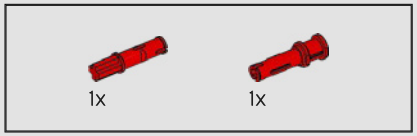

186

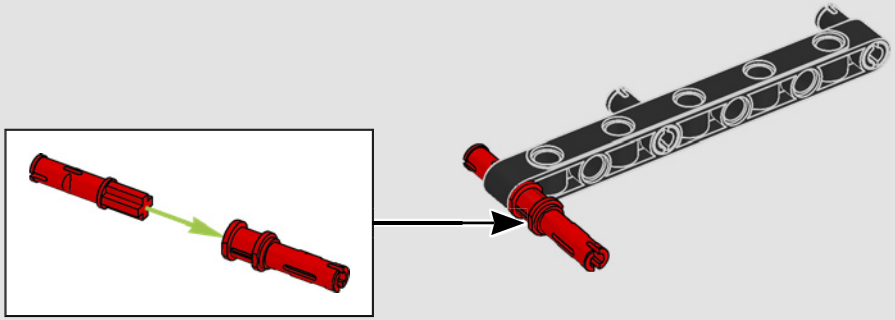

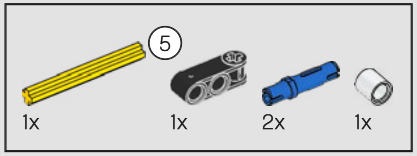

187

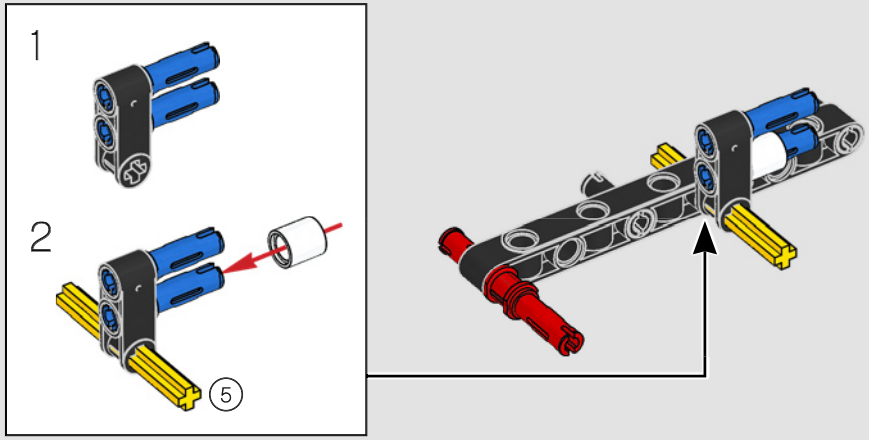

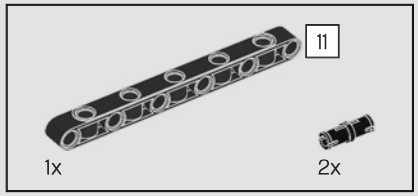

188

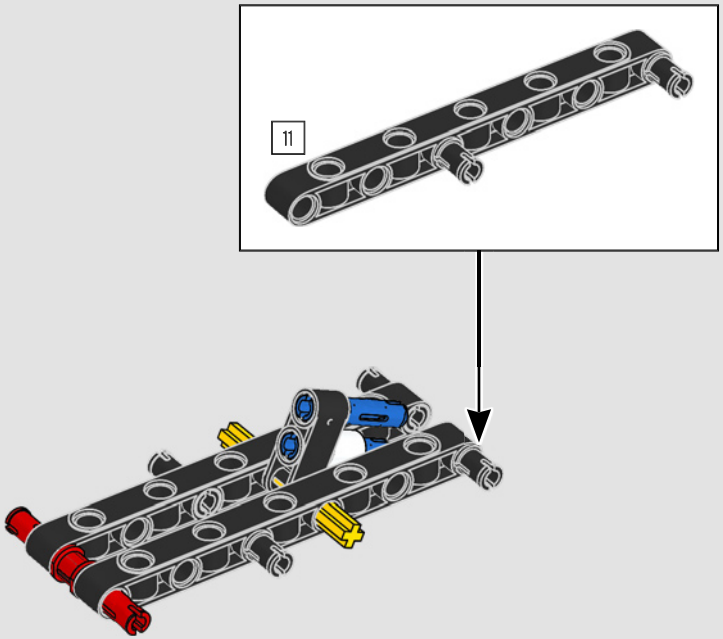

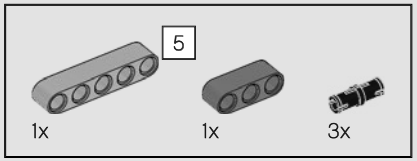

189

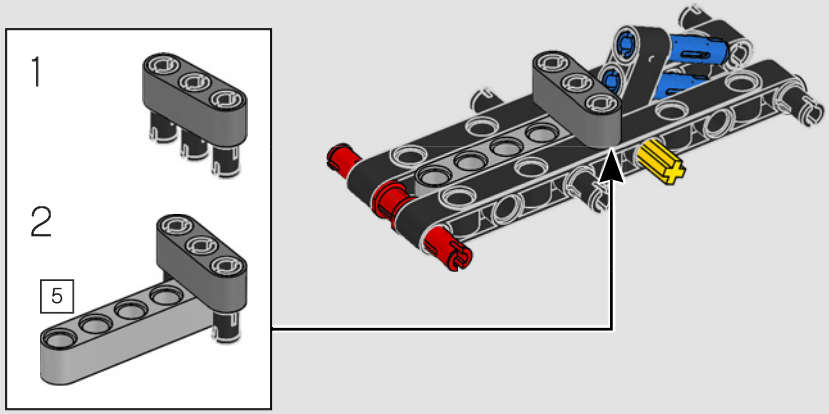

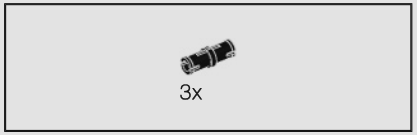

190

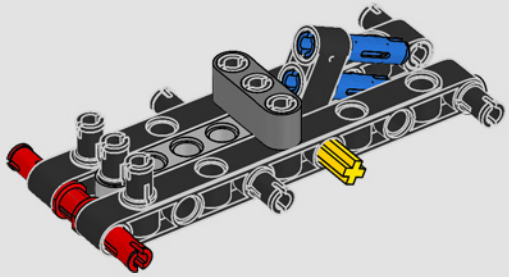

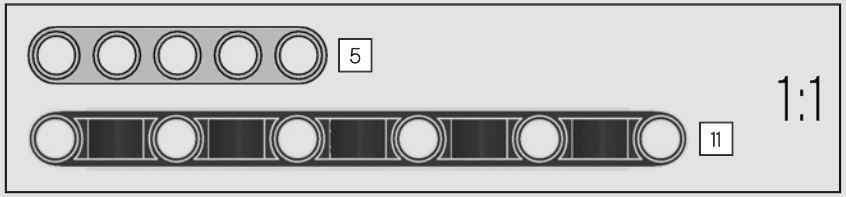

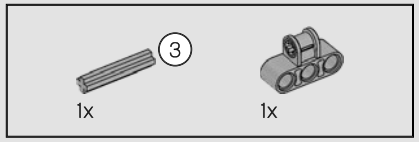

191

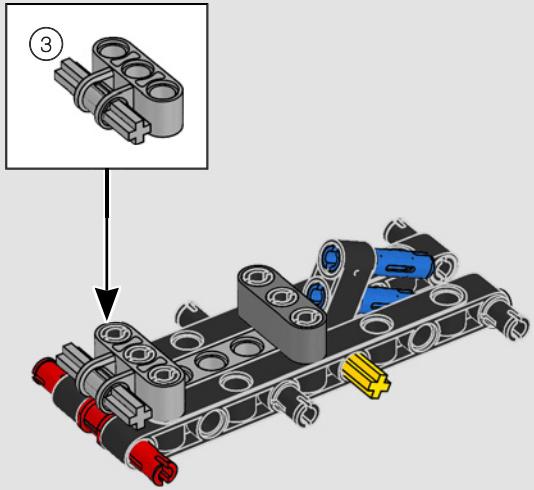

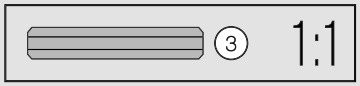

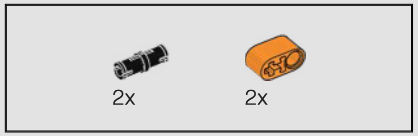

192

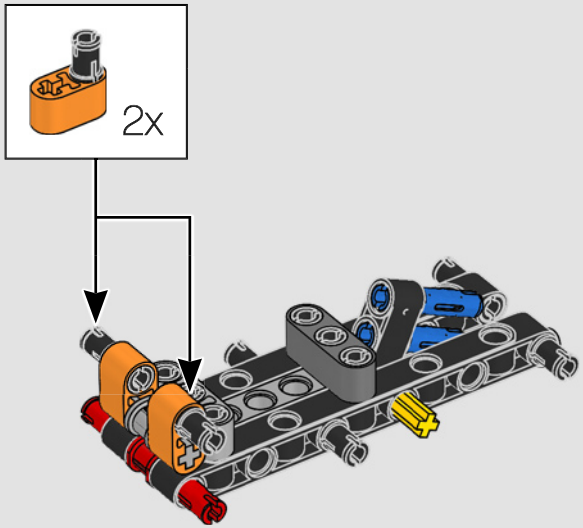

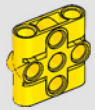

2x

193

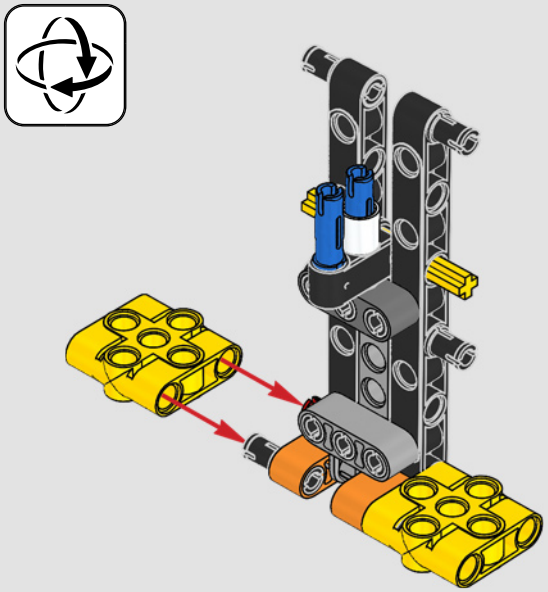

6x

194

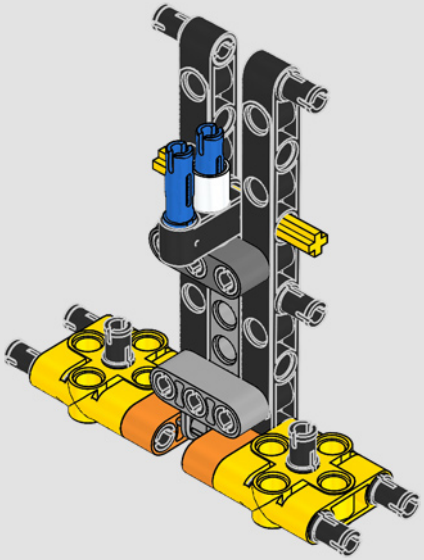

195

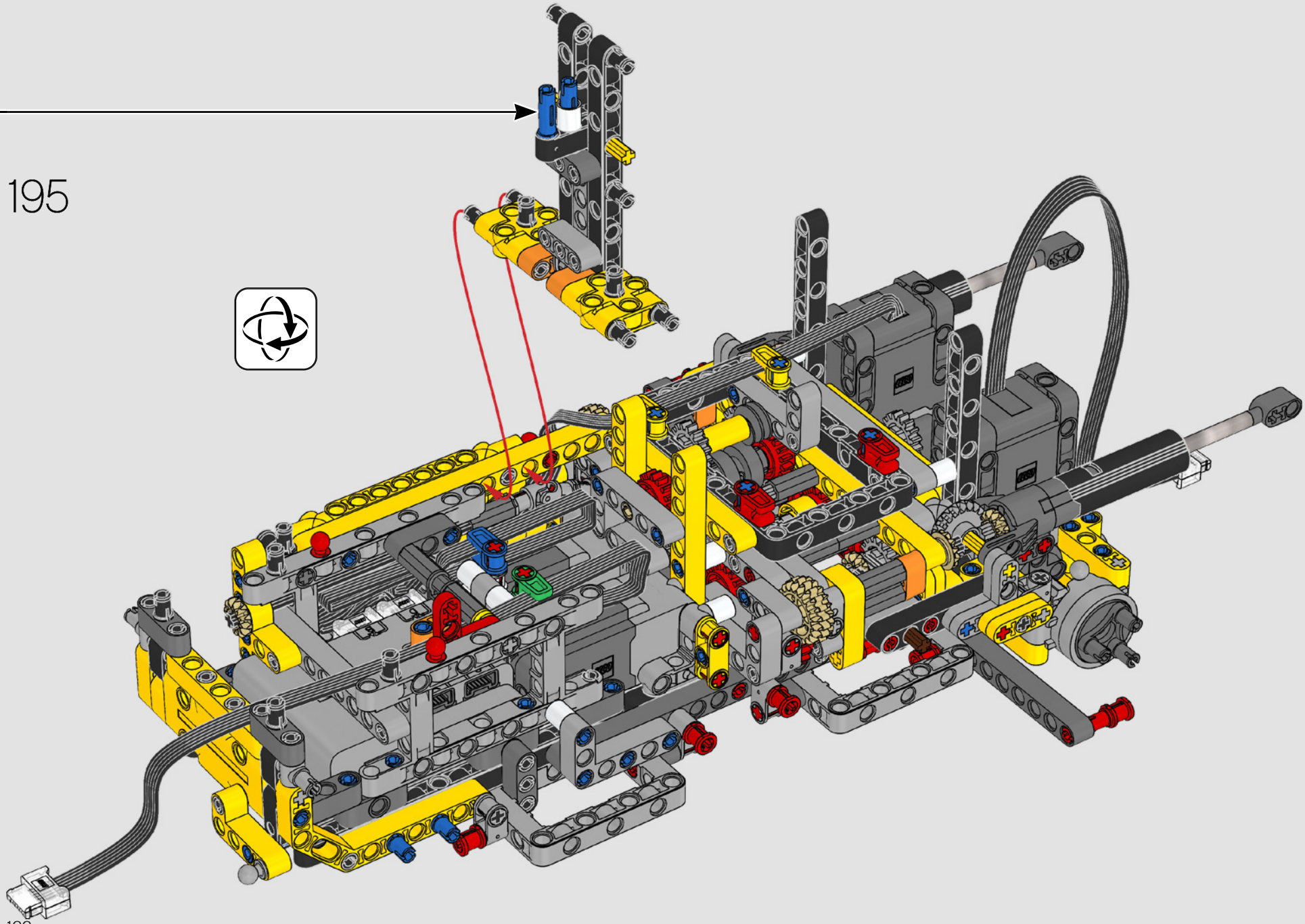

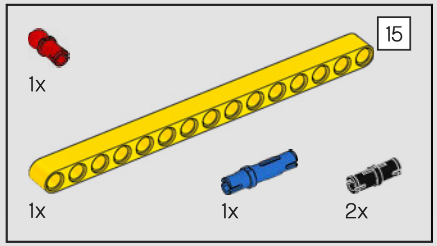

196

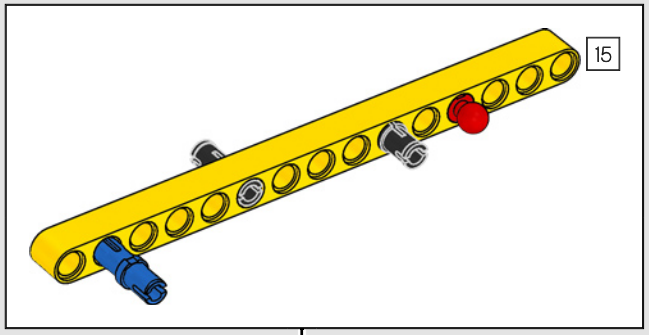

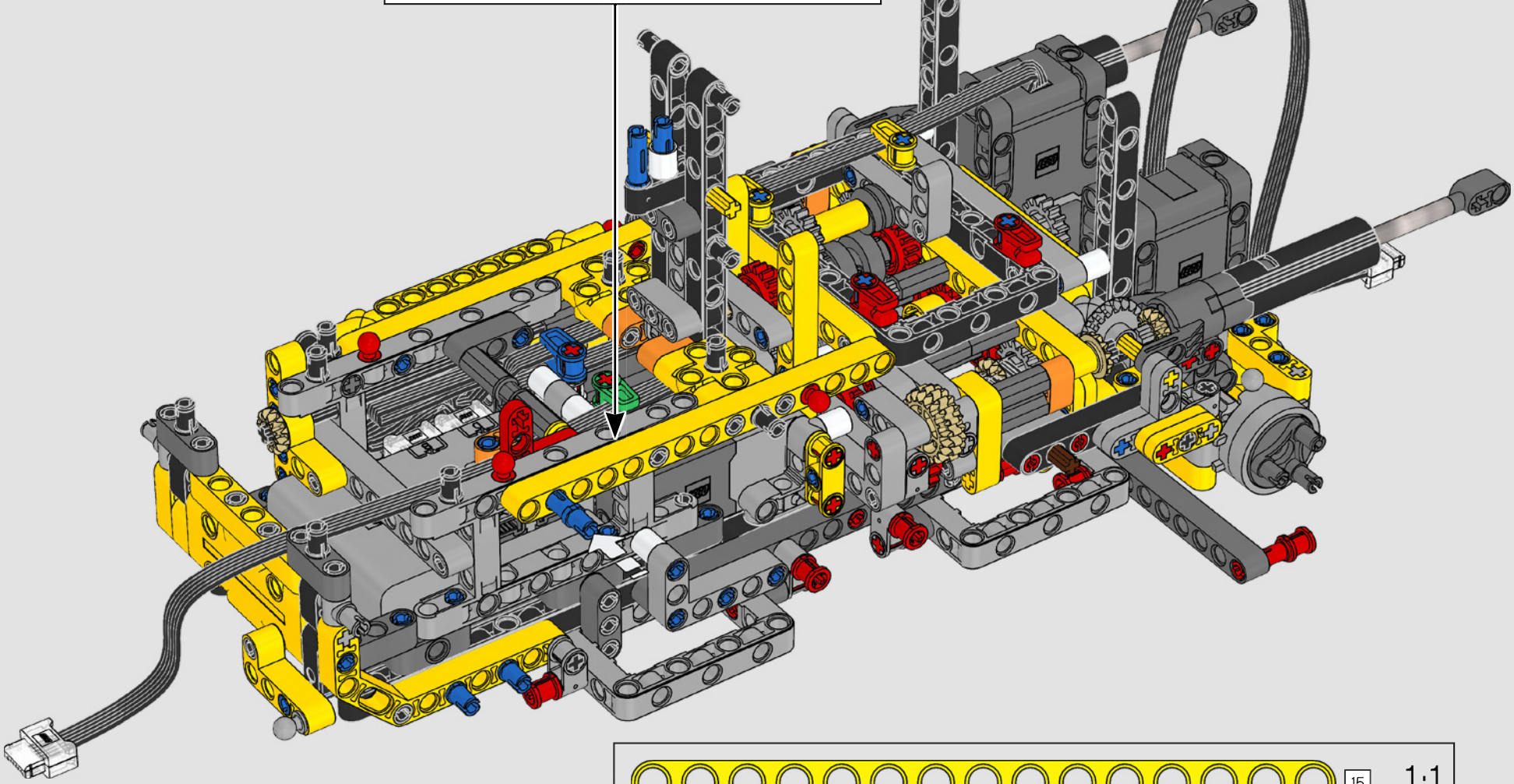

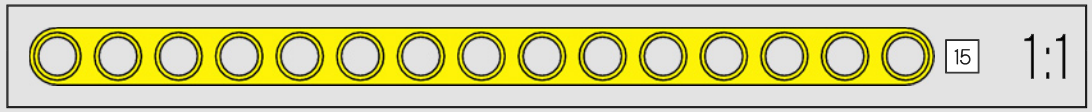

197

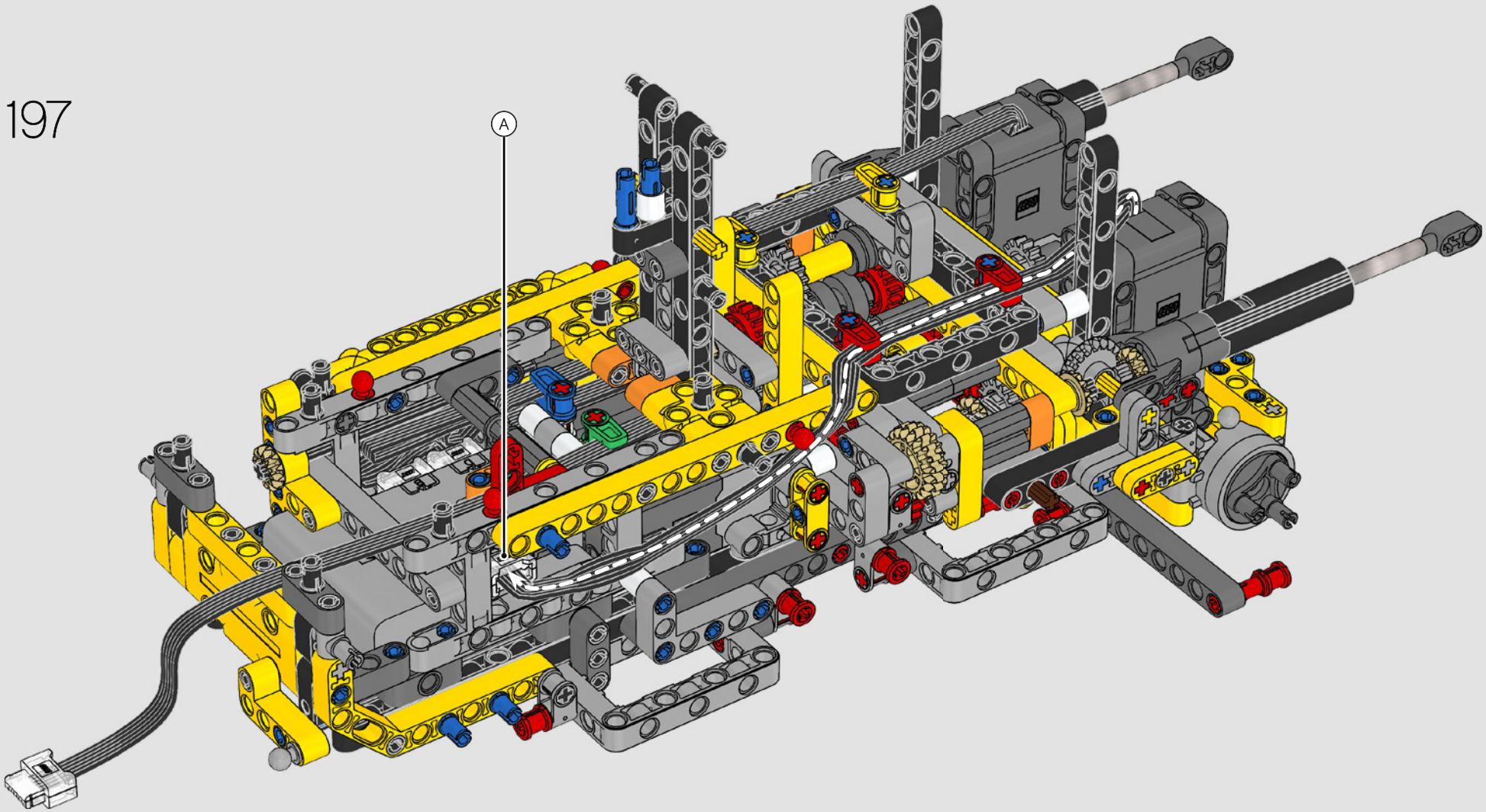

198

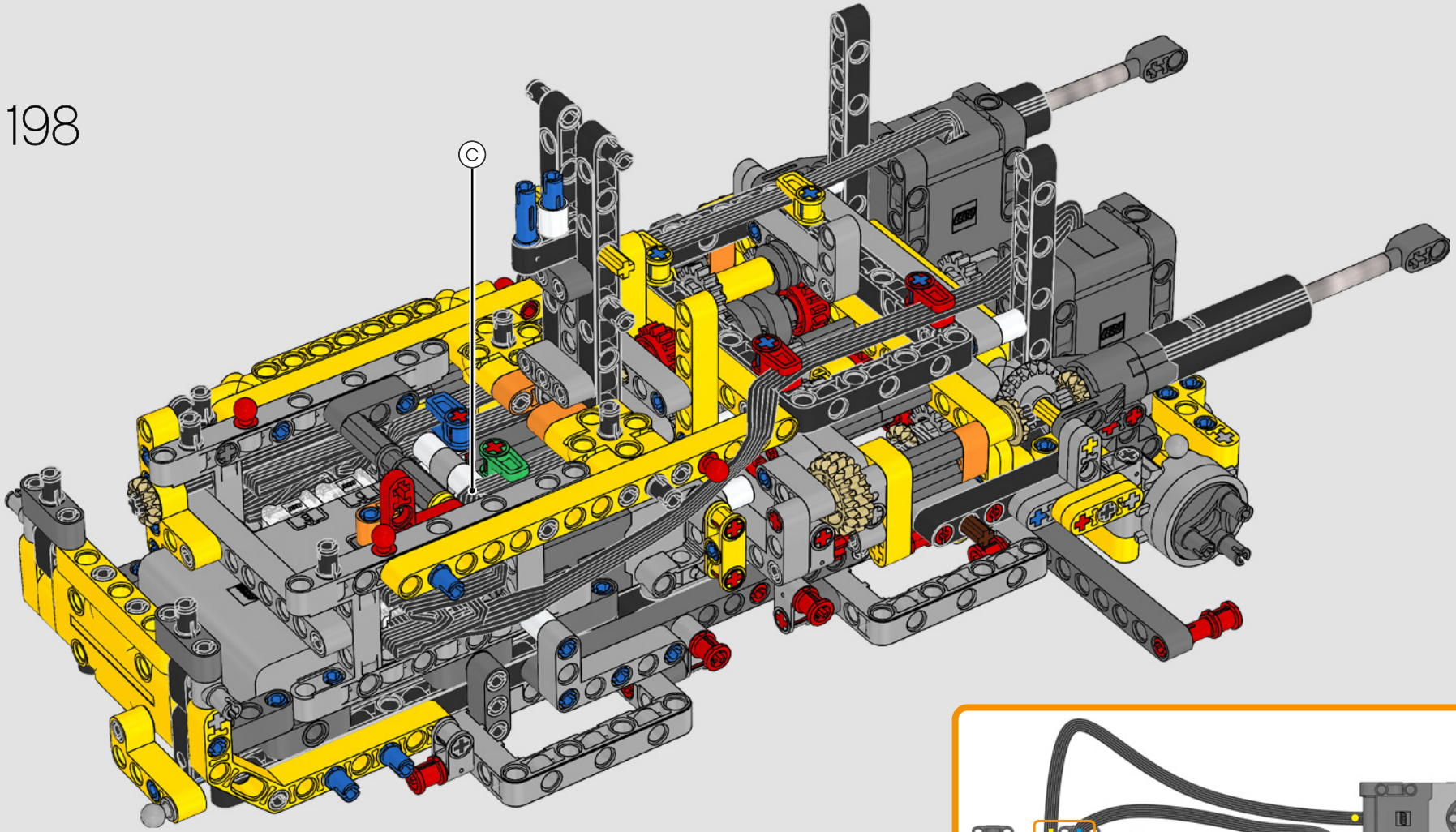

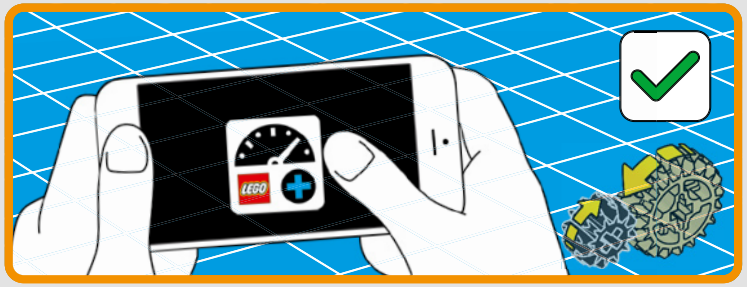

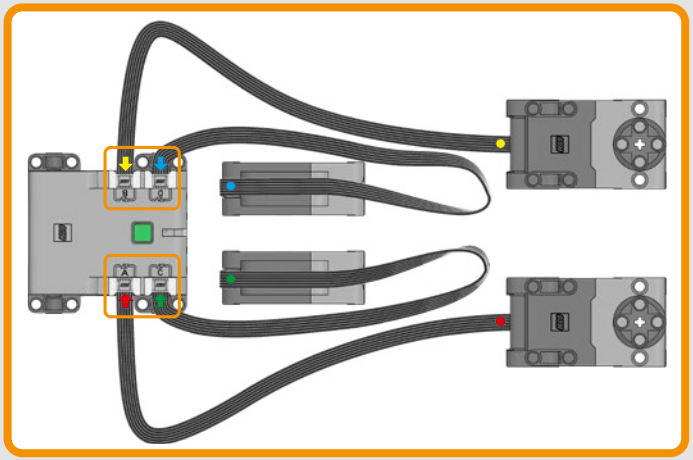

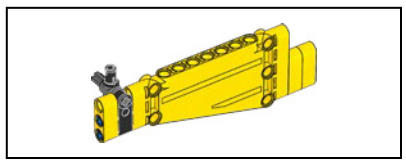

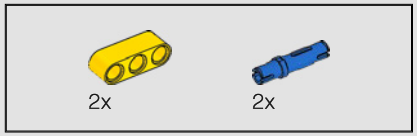

199

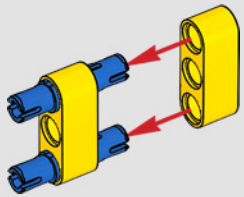

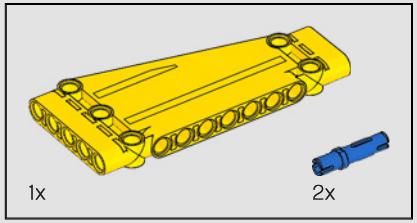

200

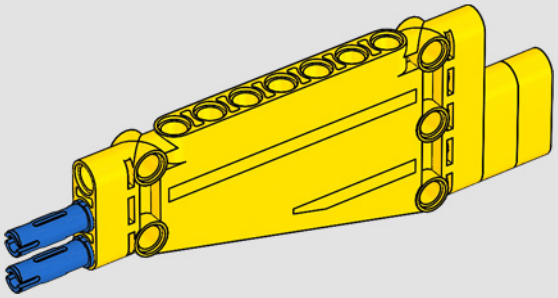

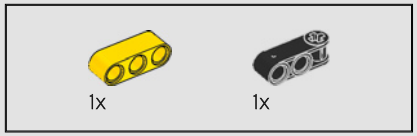

201

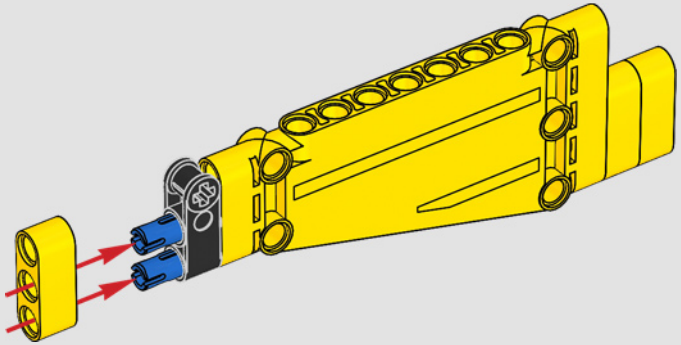

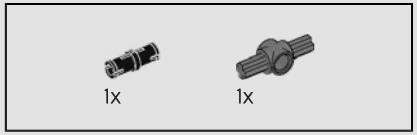

202

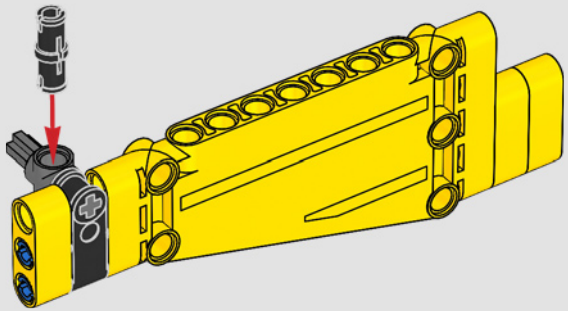

203

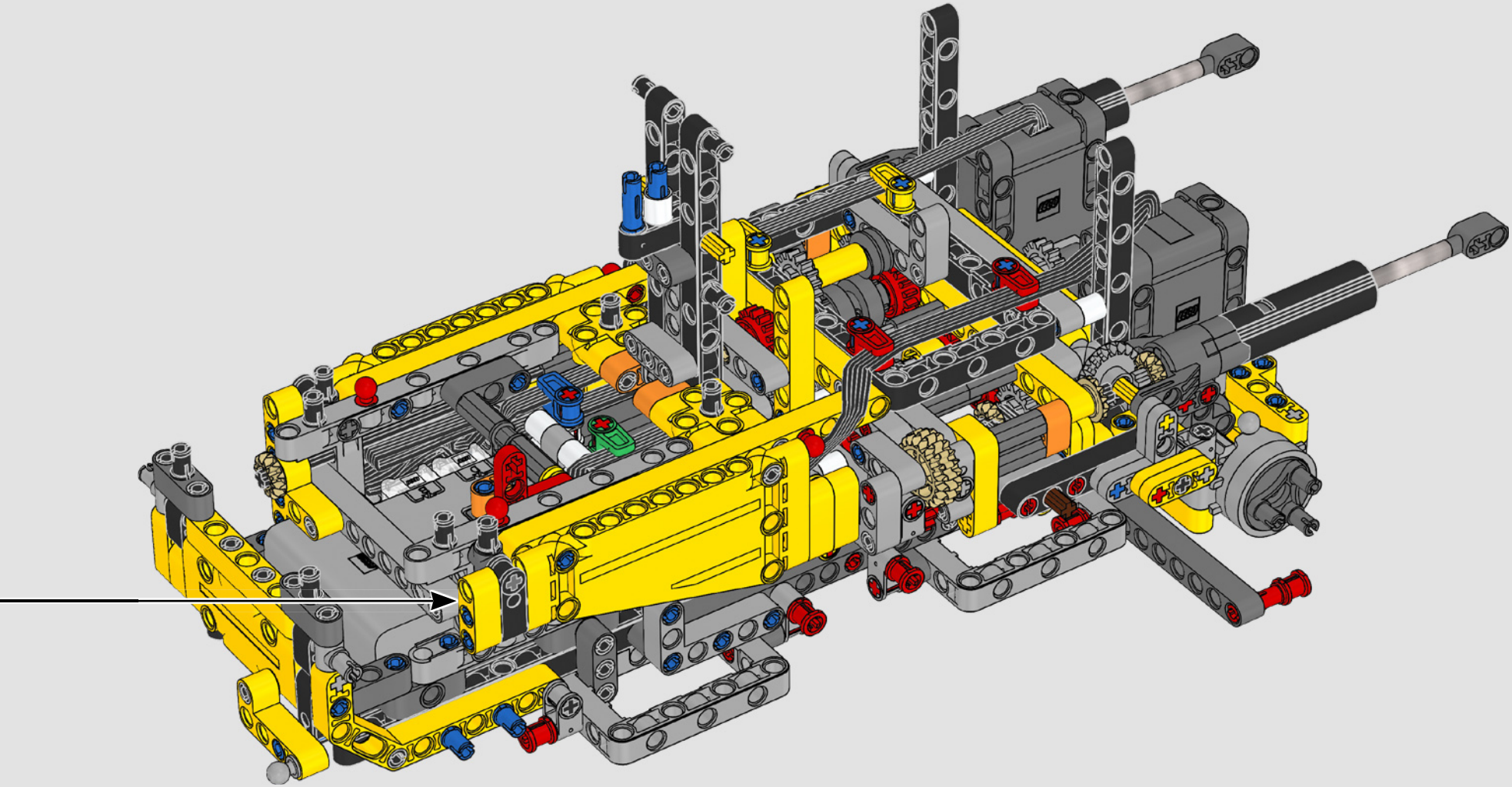

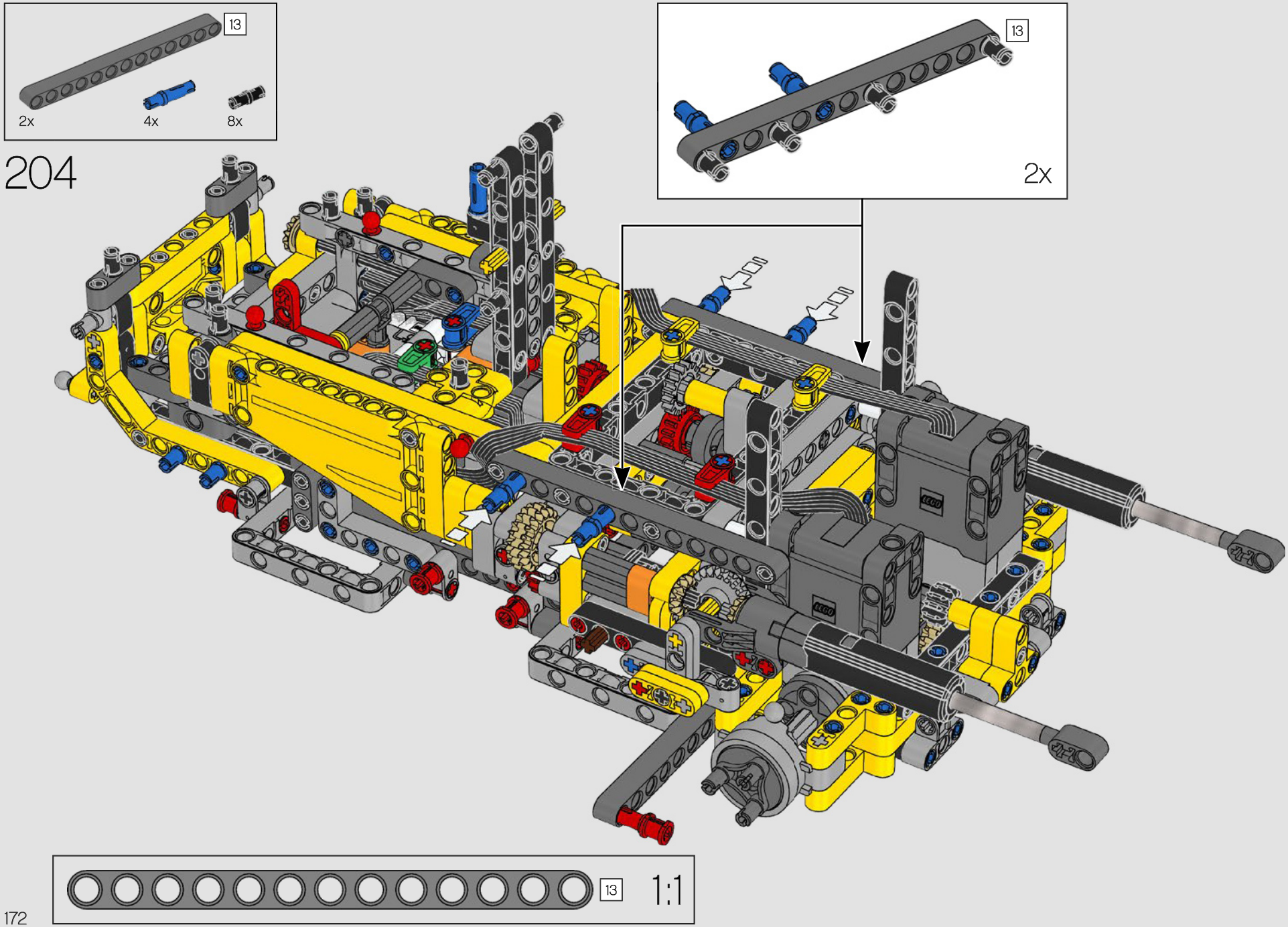
13
2x
4x
8x
204
13
2x
13
1:1

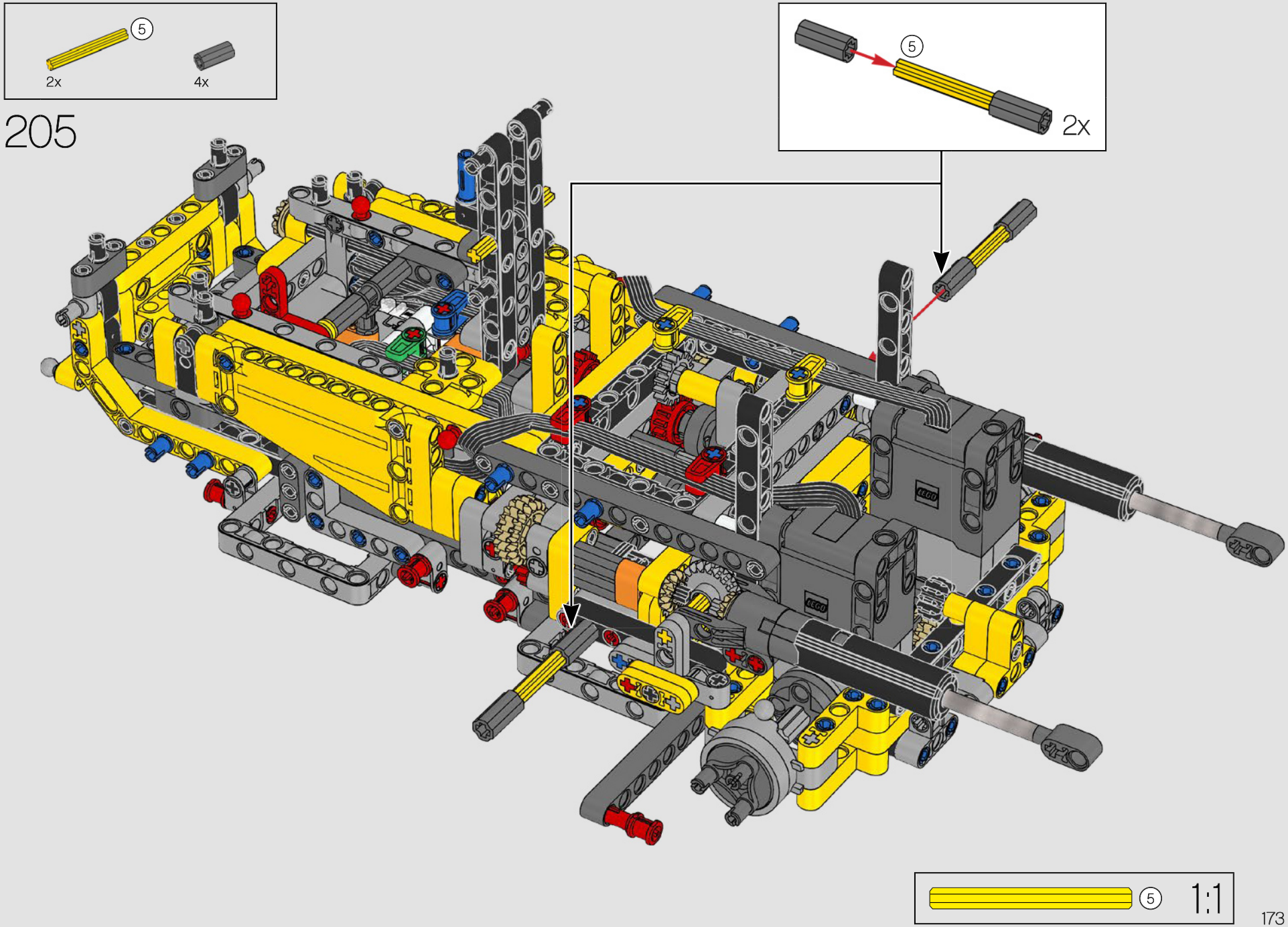
5
2x
4x
205
5
2x
5
1:1

206

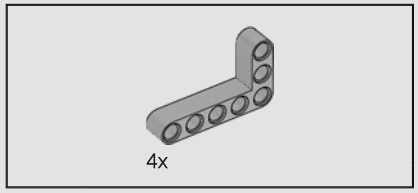

207

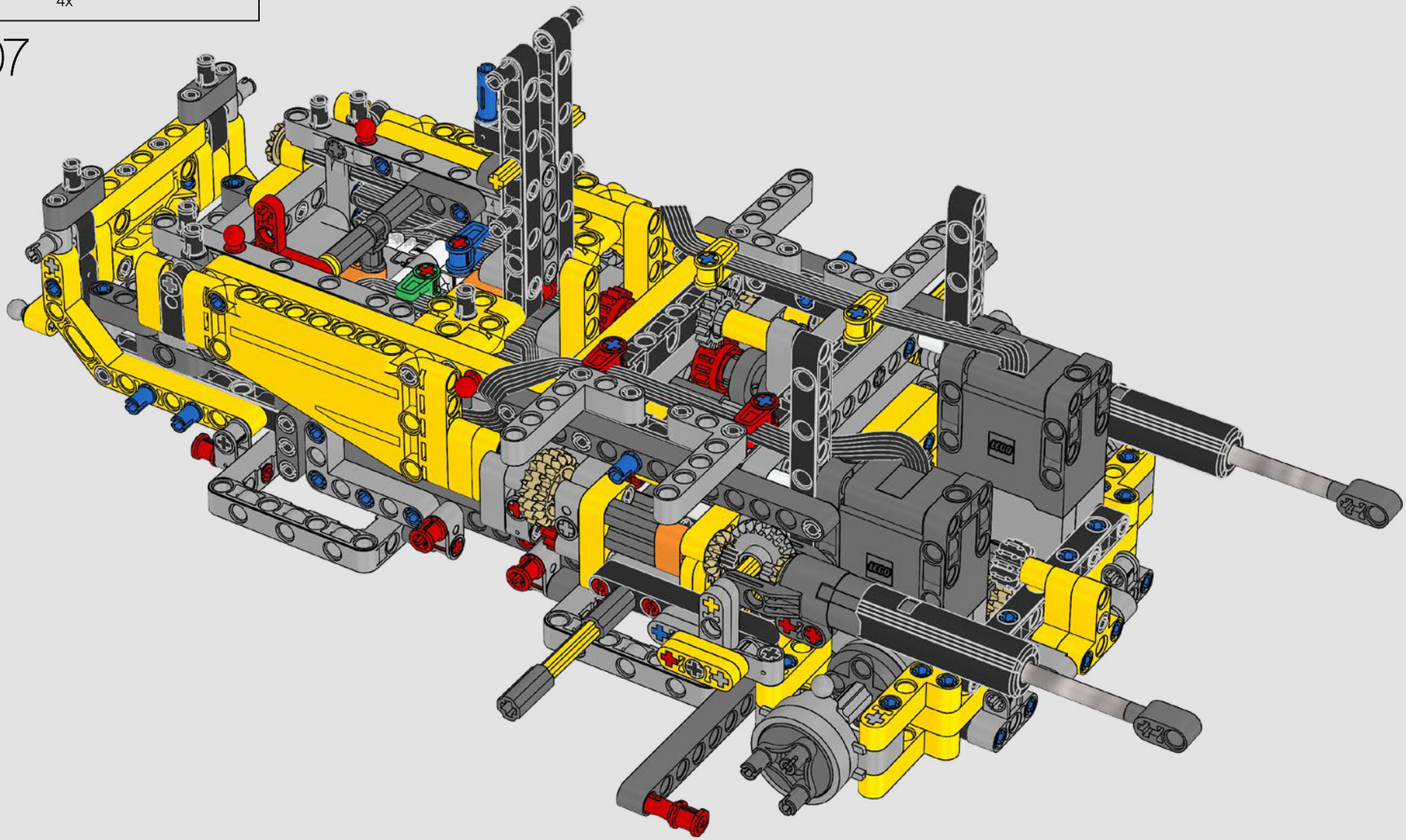

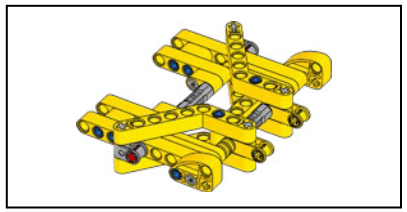

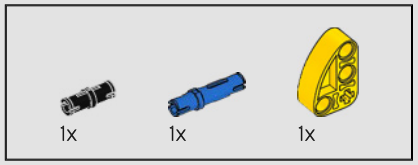

208

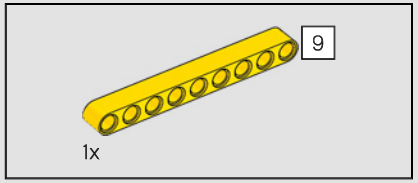

209

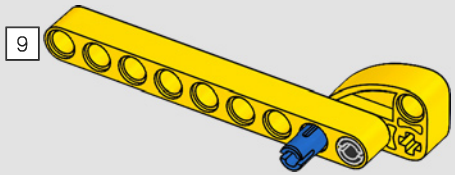

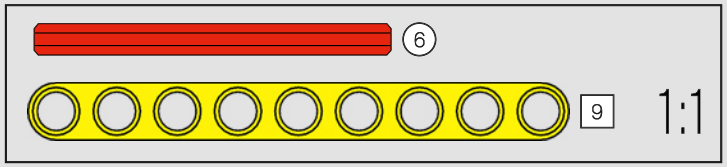

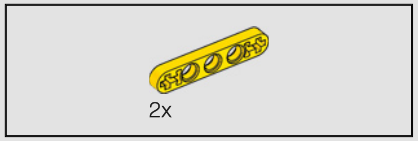

210

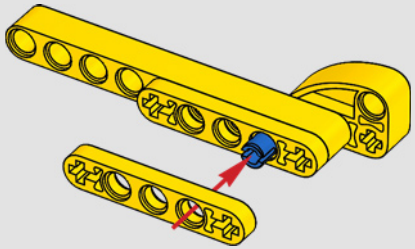

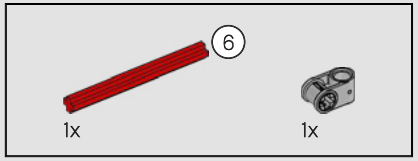

211

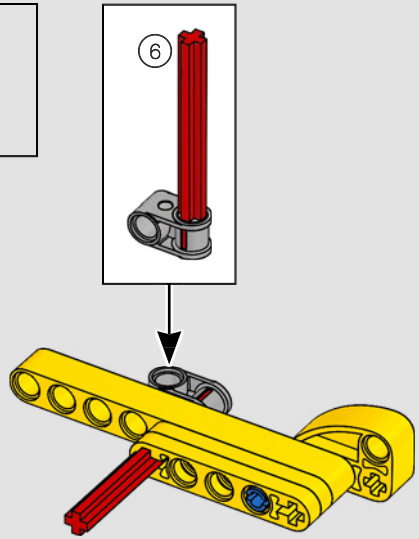

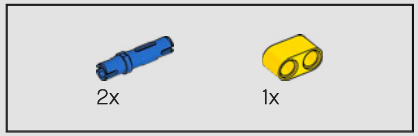

212

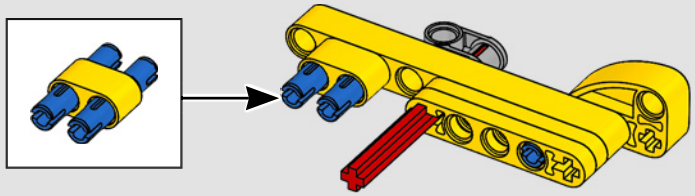

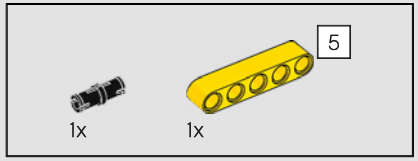

213

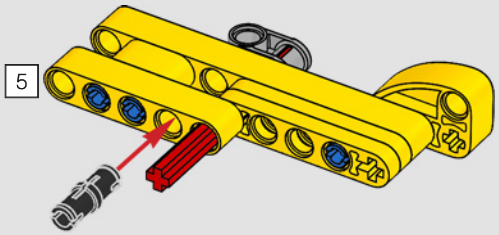

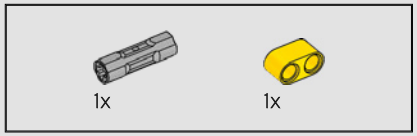

214

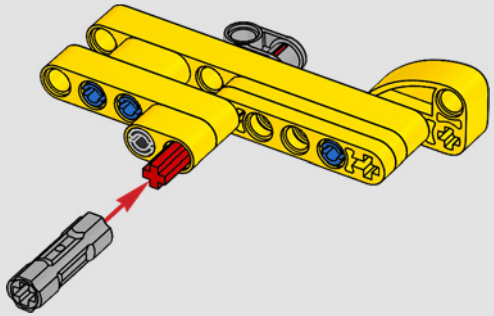

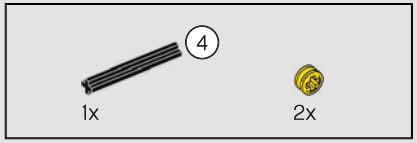

215

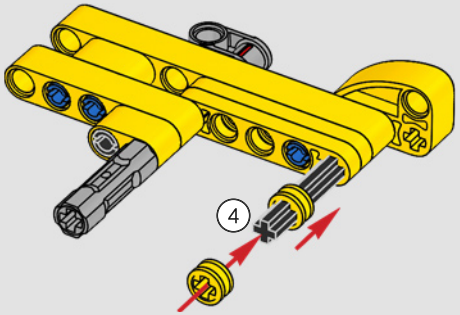

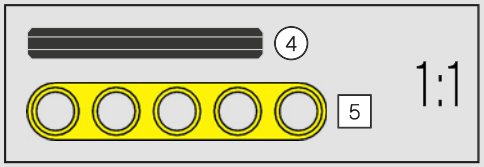

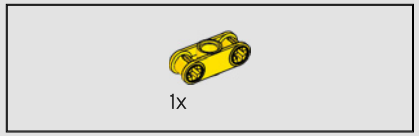

216

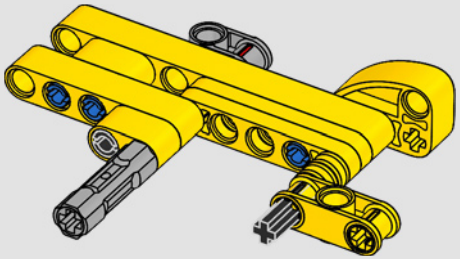

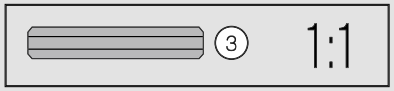

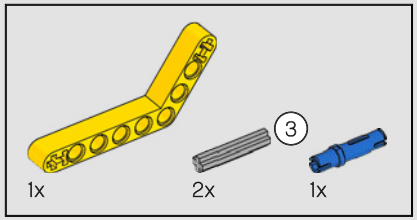

217

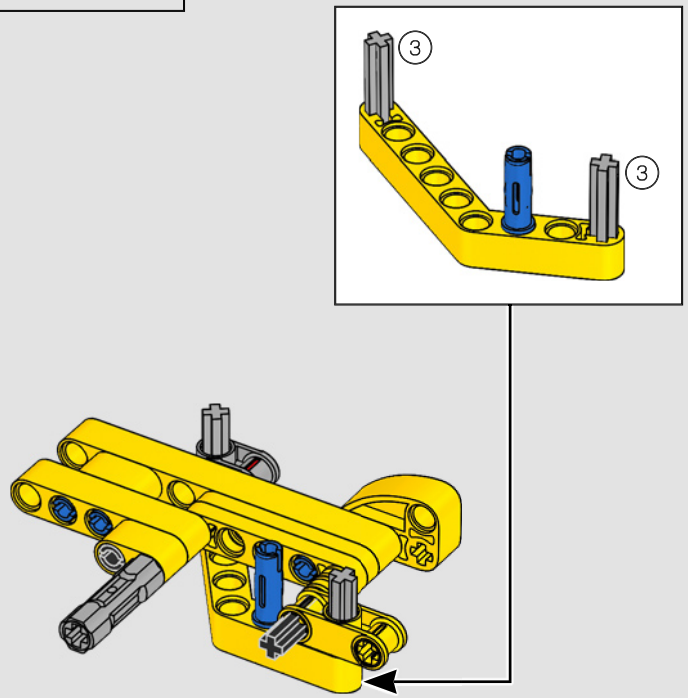

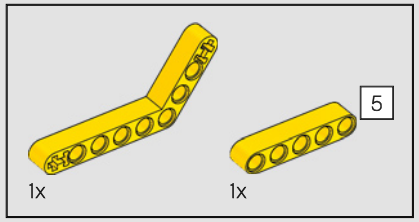

218

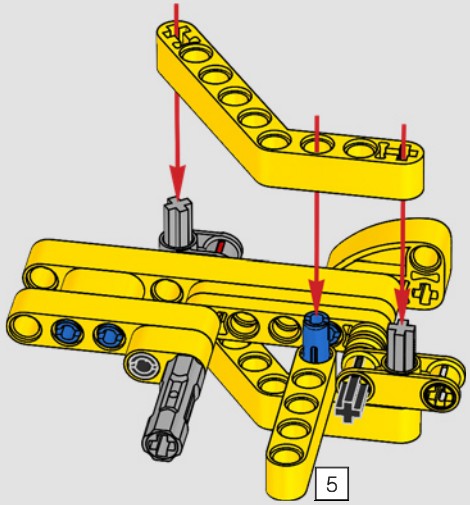

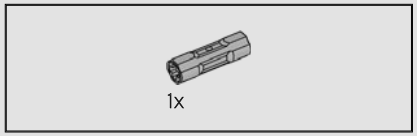

219

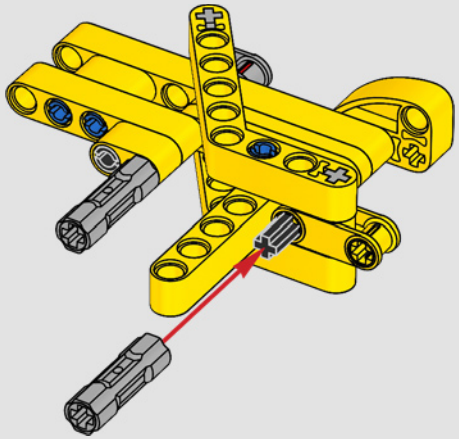

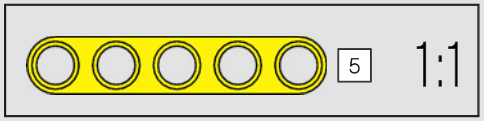

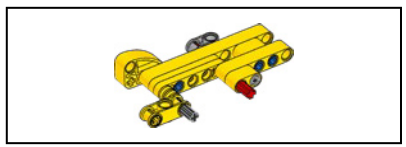

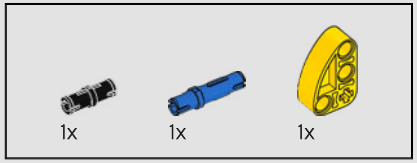

220

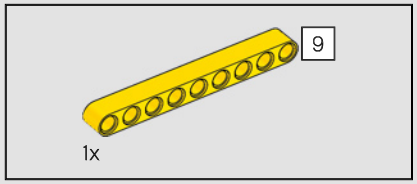

221

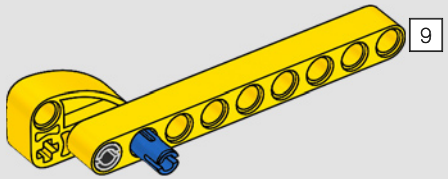

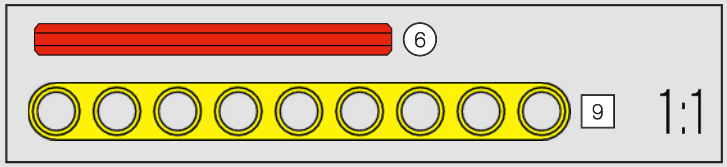

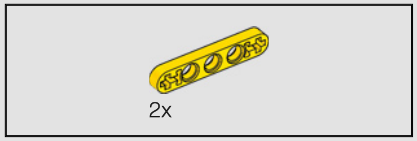

222

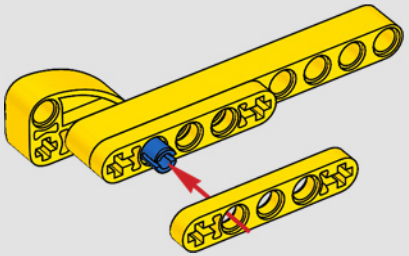

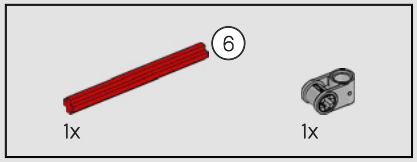

223

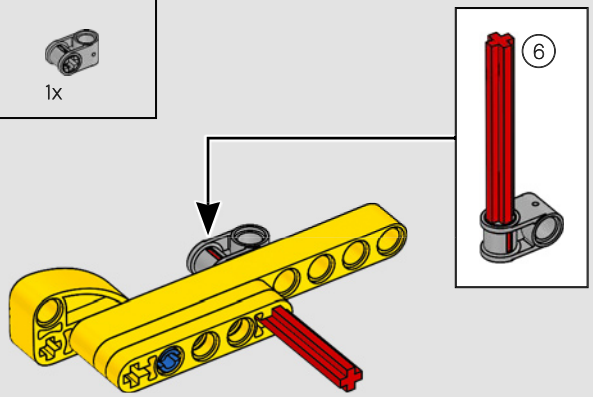

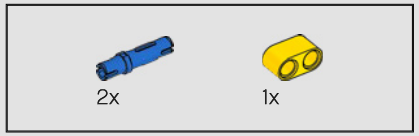

224

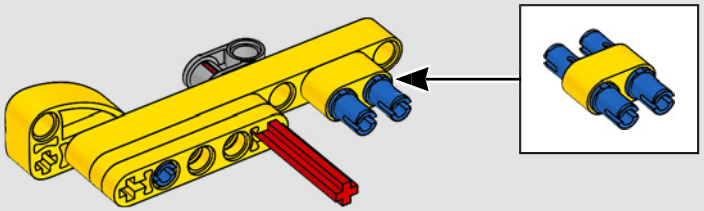

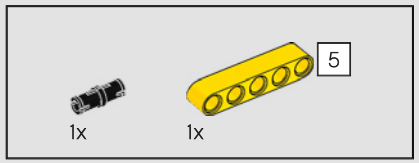

225

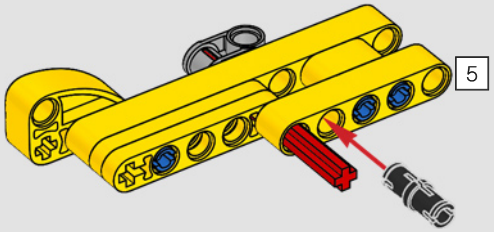

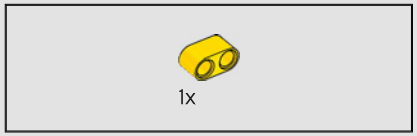

226

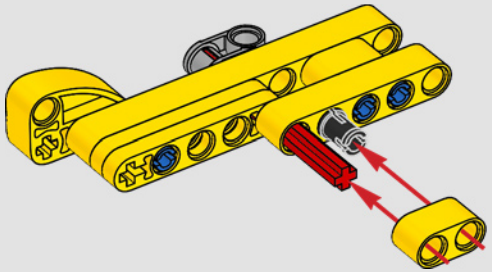

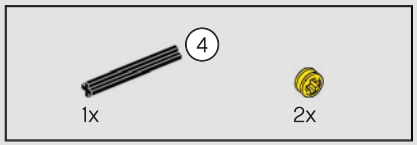

227

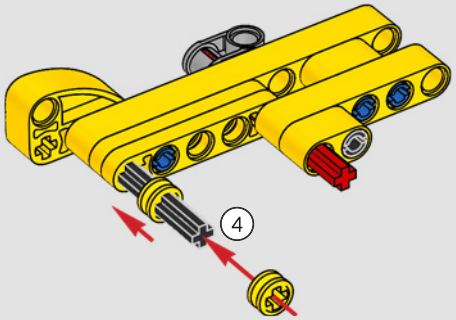

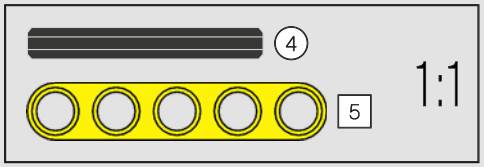

1x

228

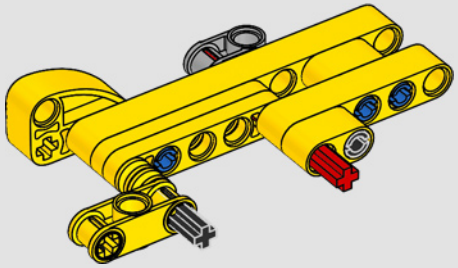

229

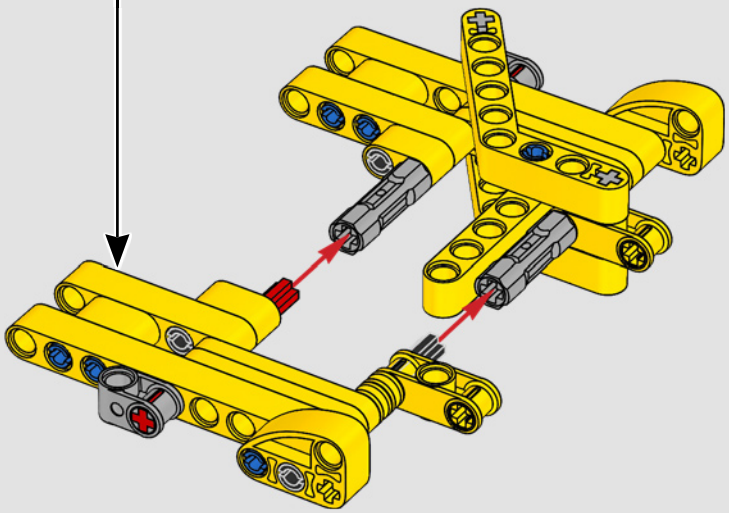

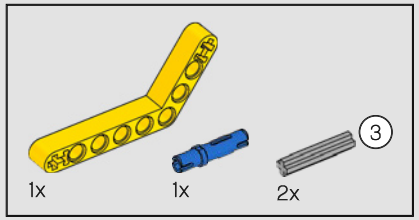

230

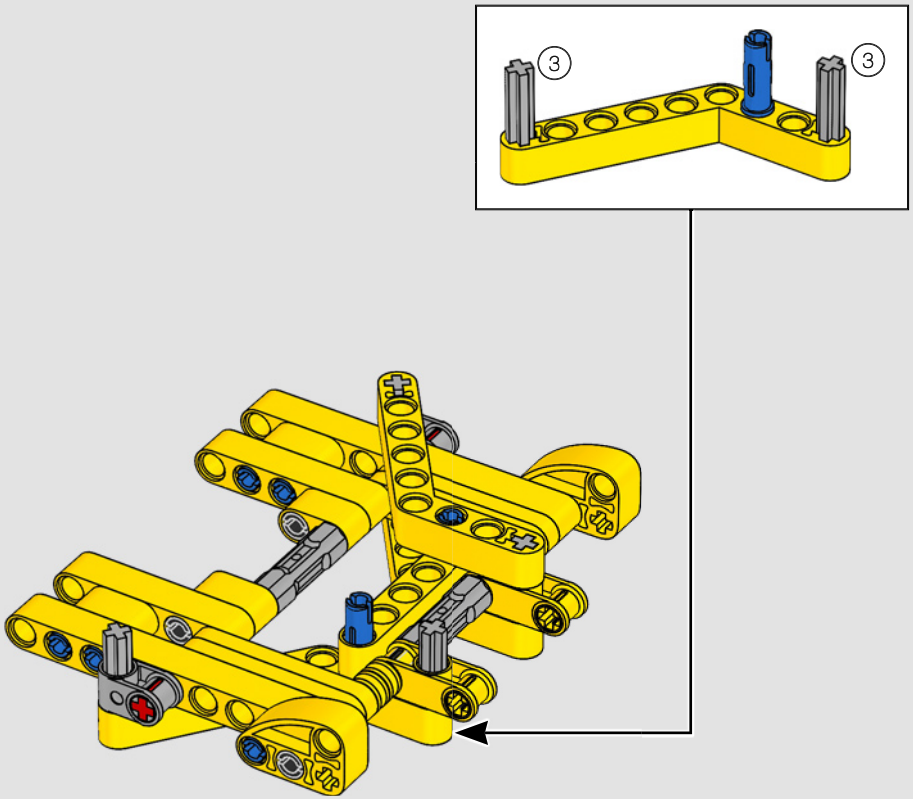

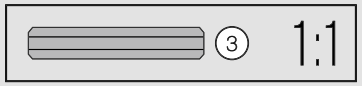

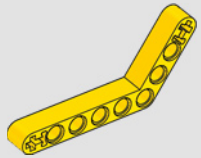

231

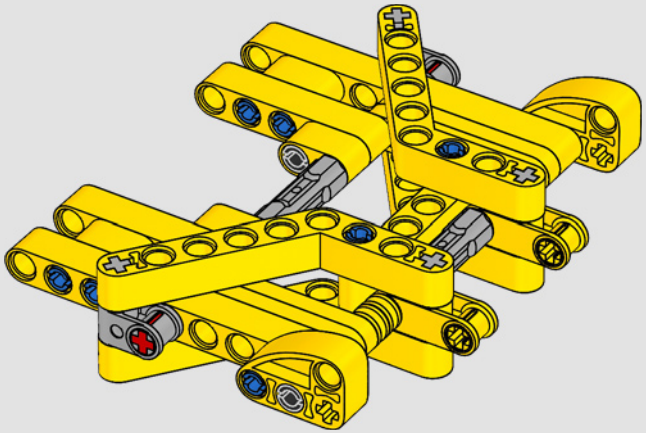

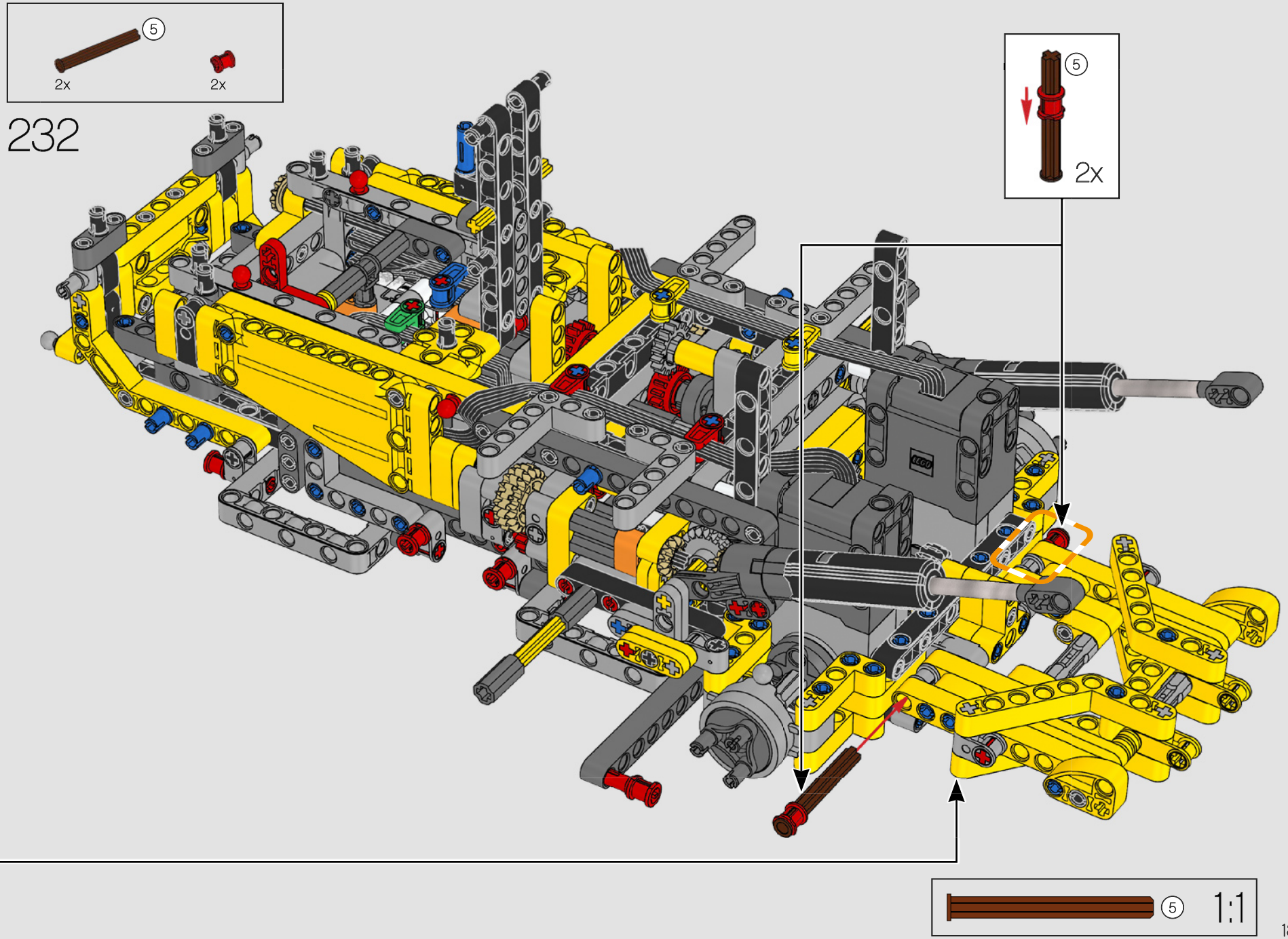
5
2x
2x
232
5
2x
5
1:1

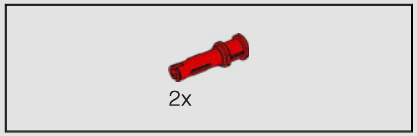

233

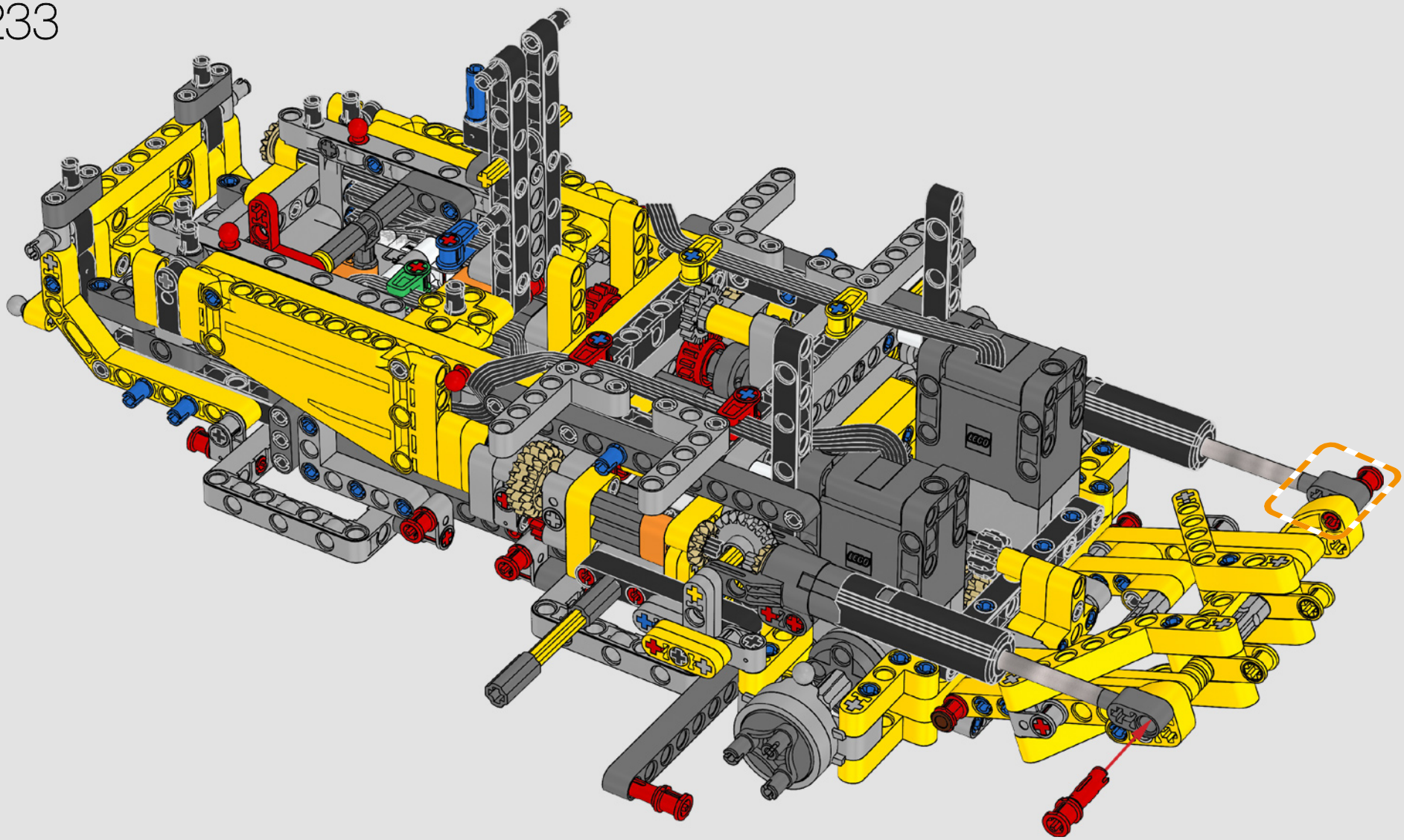

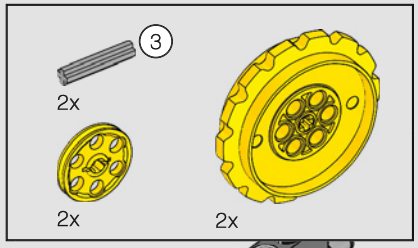

234

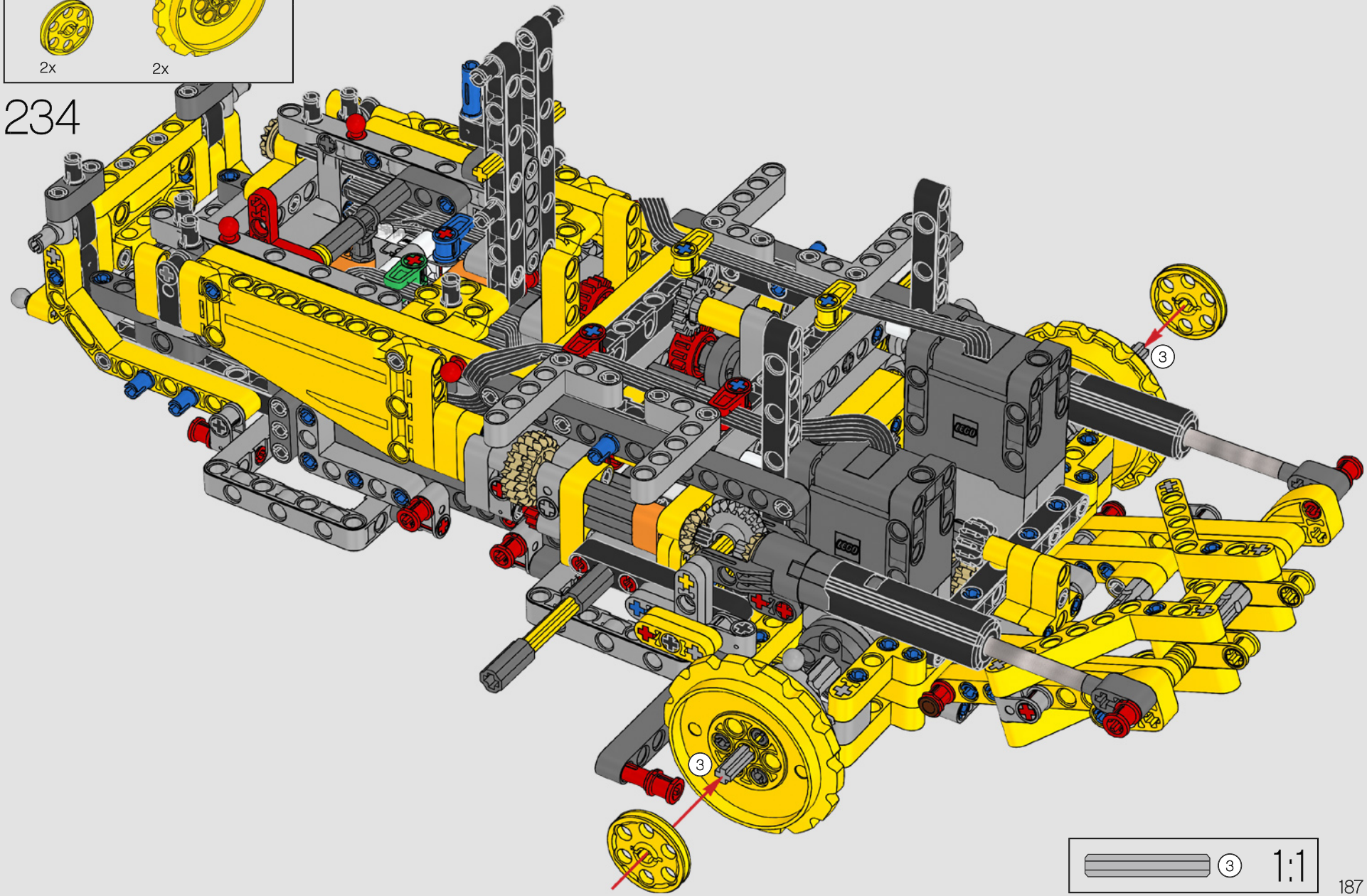

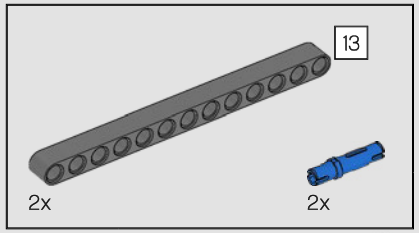

235

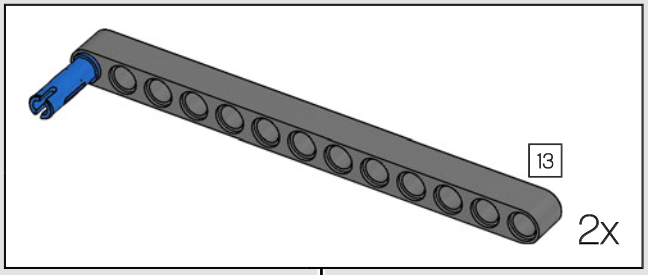

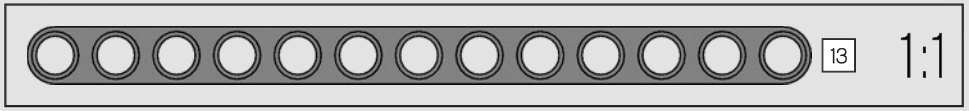

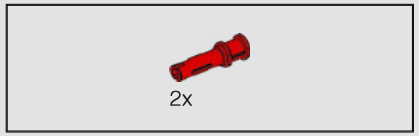

236

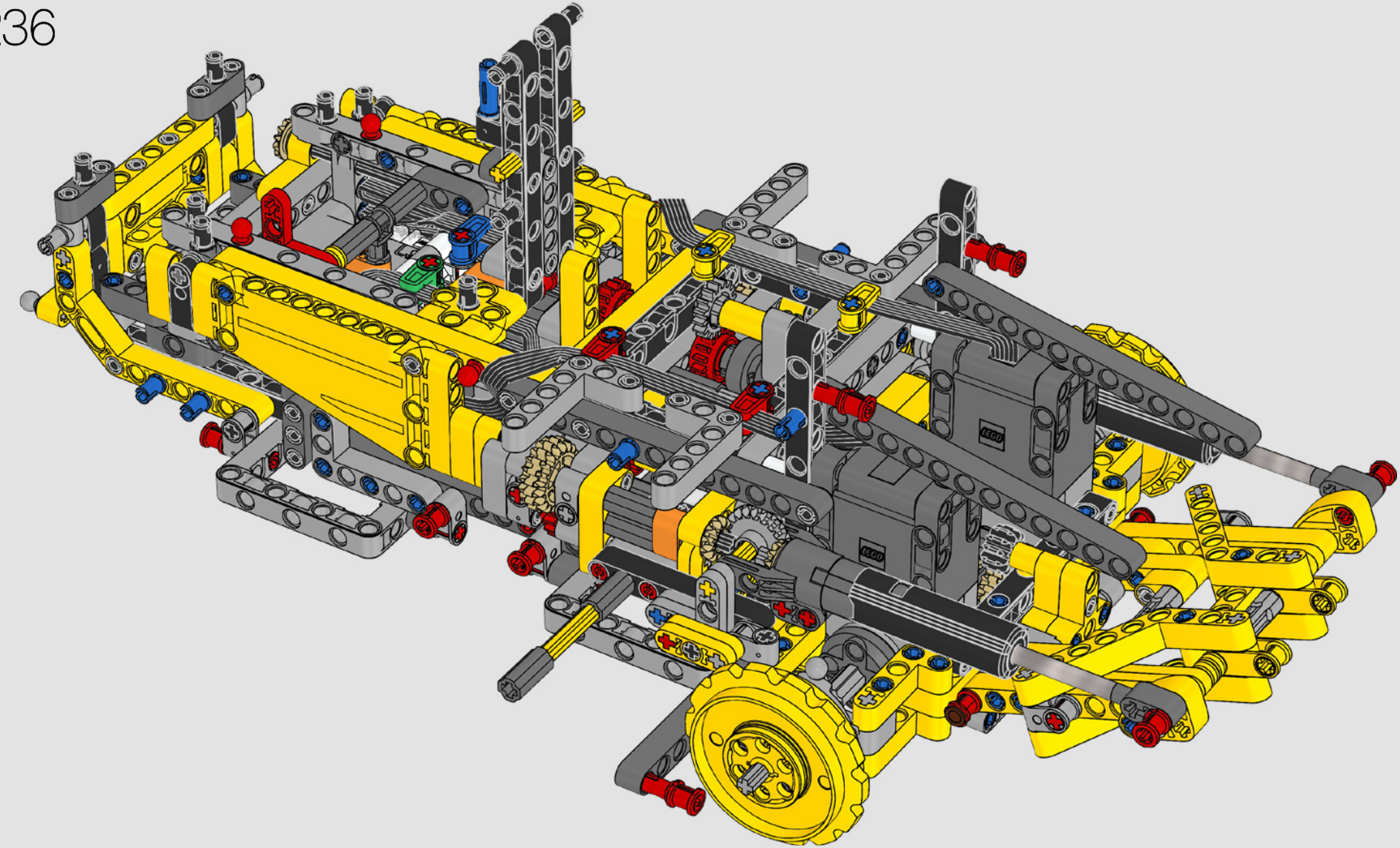

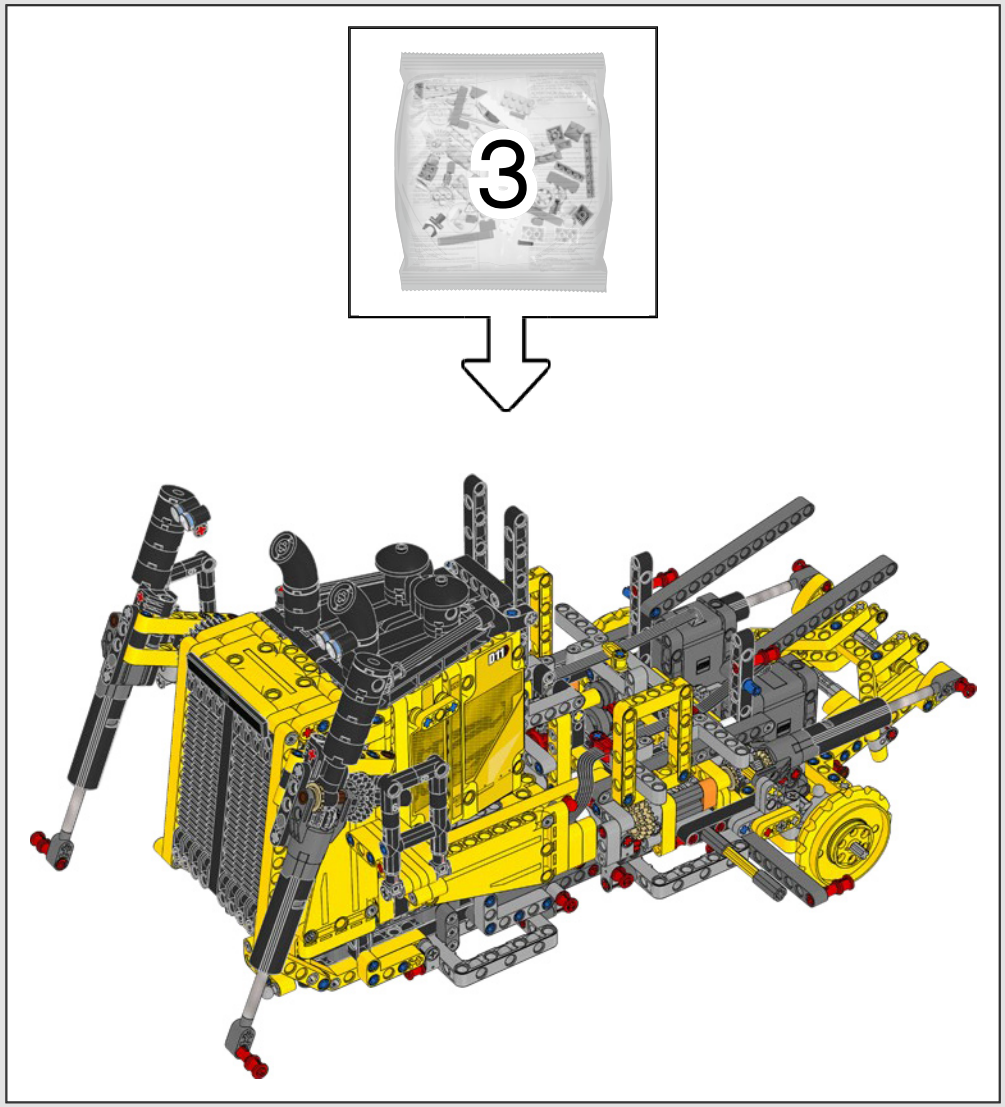
3

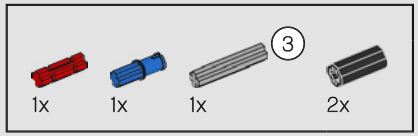

237

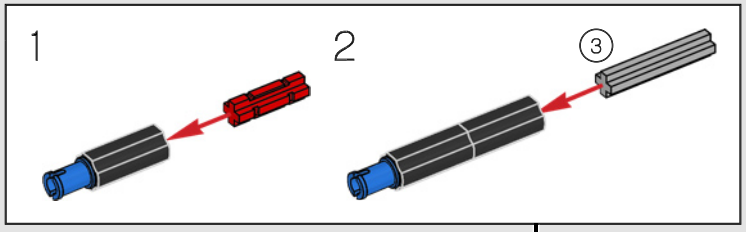

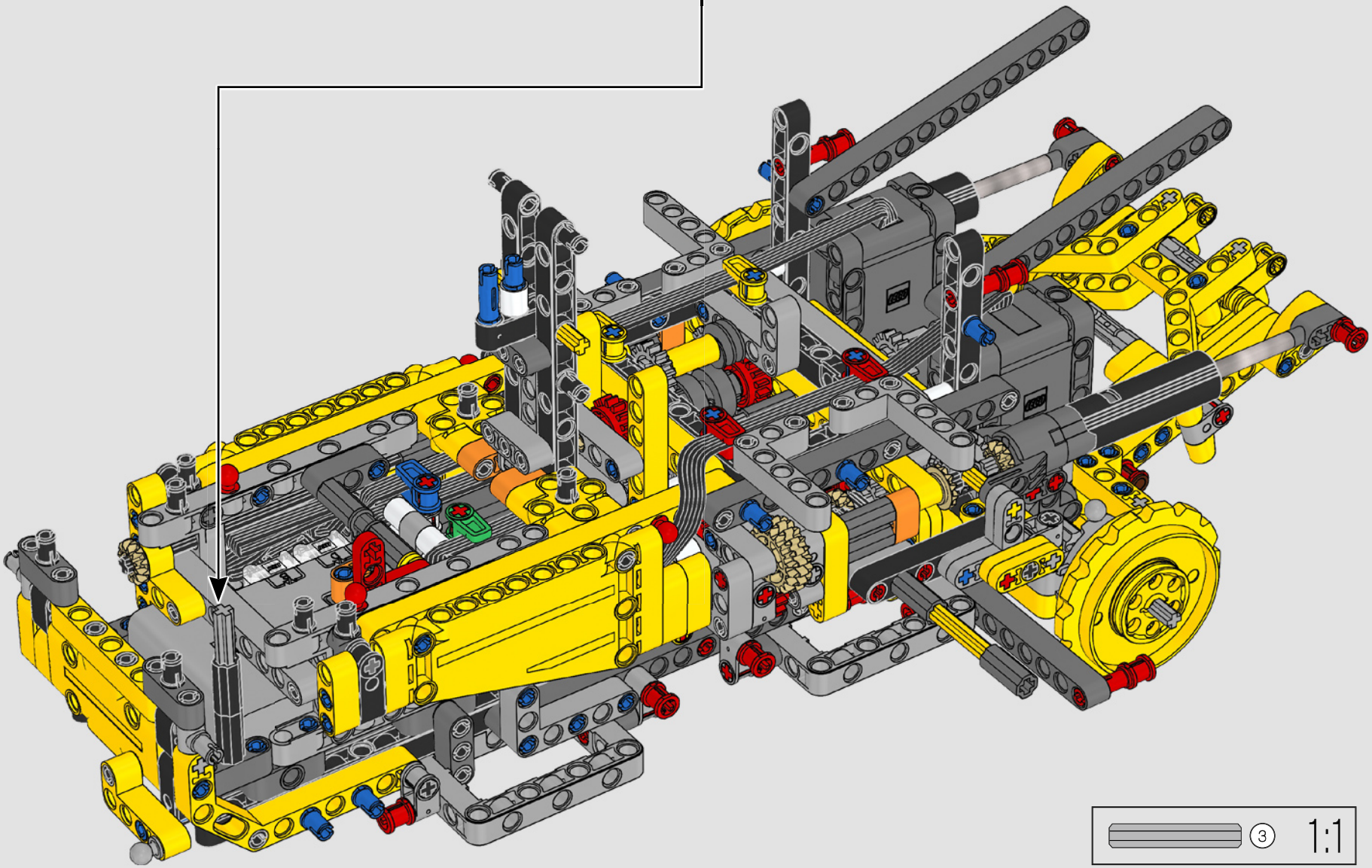

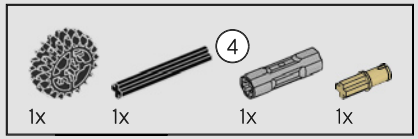

238

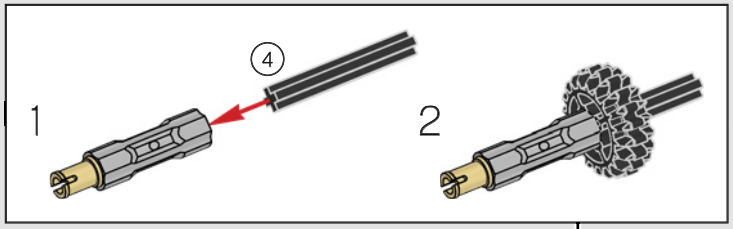

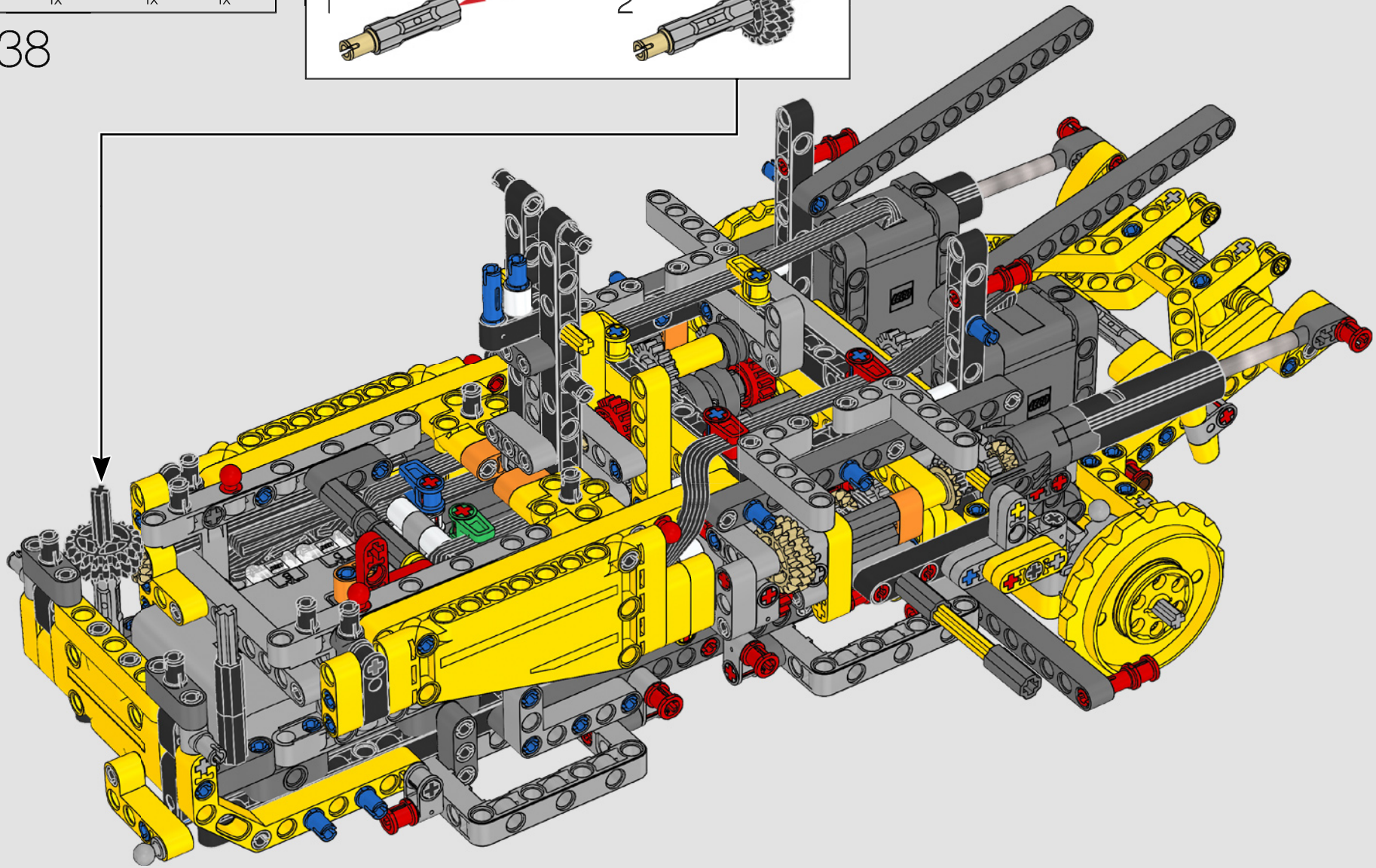

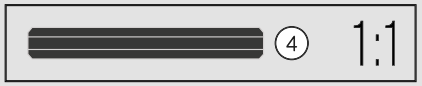

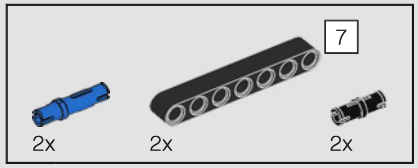

239

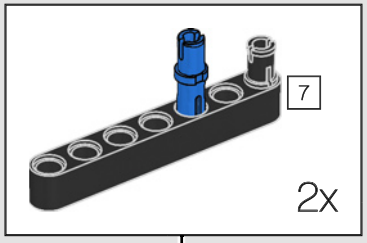

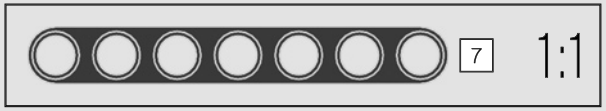

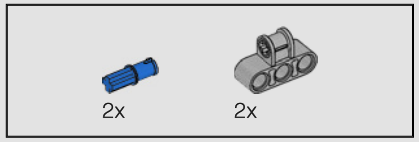

240

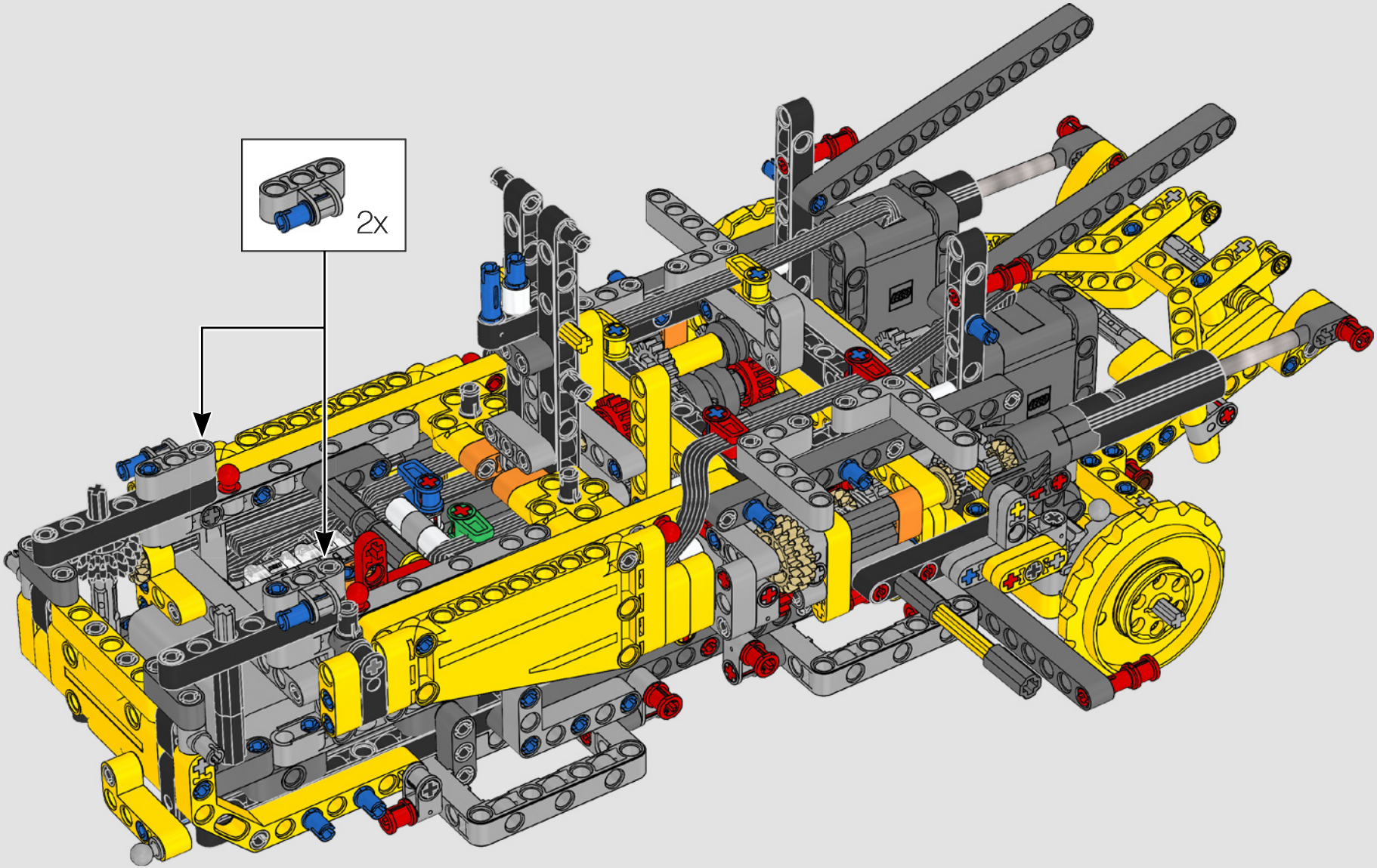

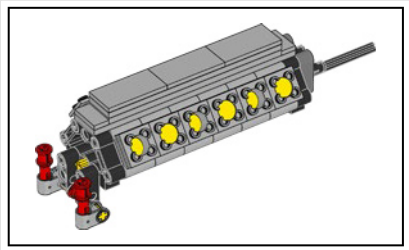

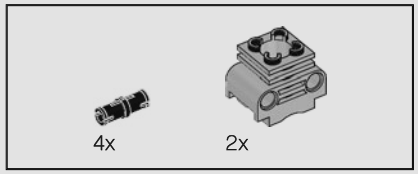

241

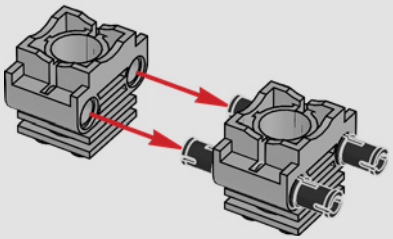

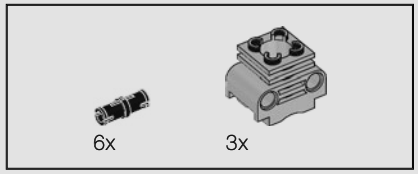

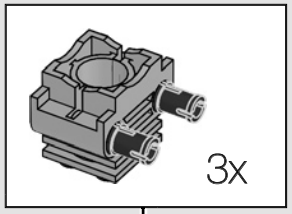

242

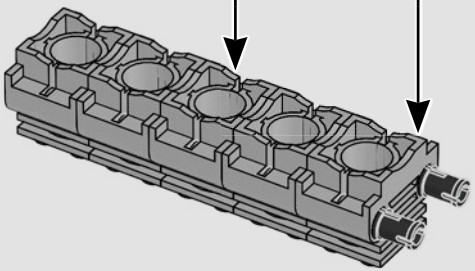

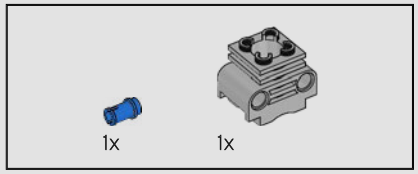

243

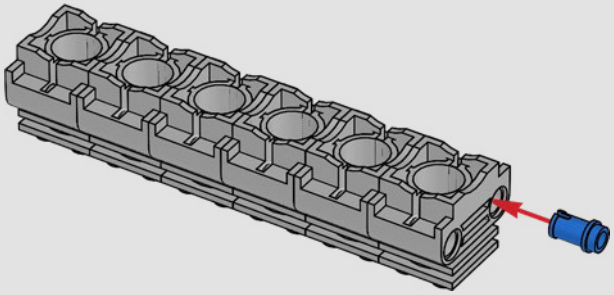

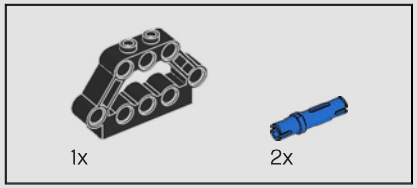

244

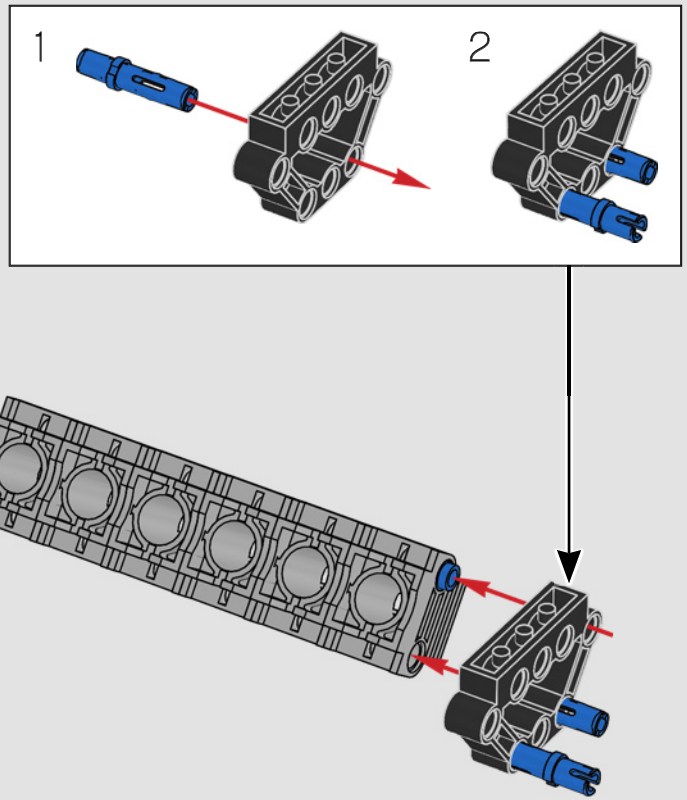

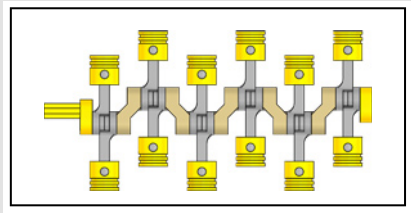

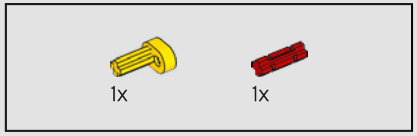

245

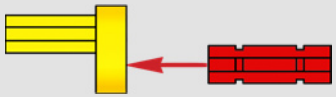

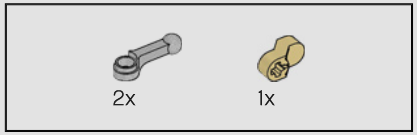

246

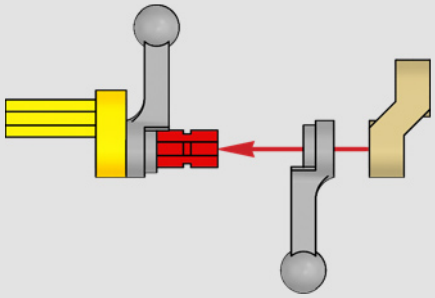

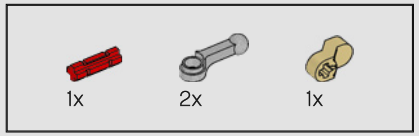

247

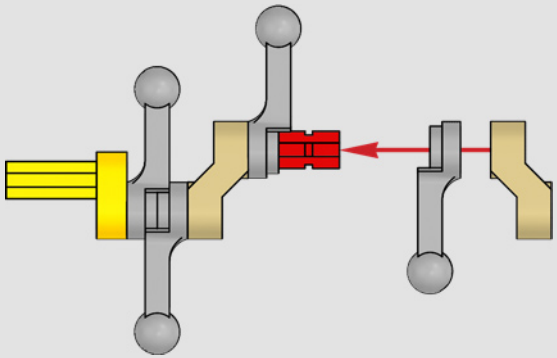

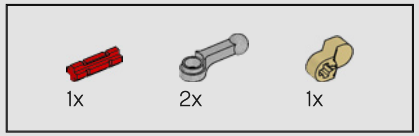

248

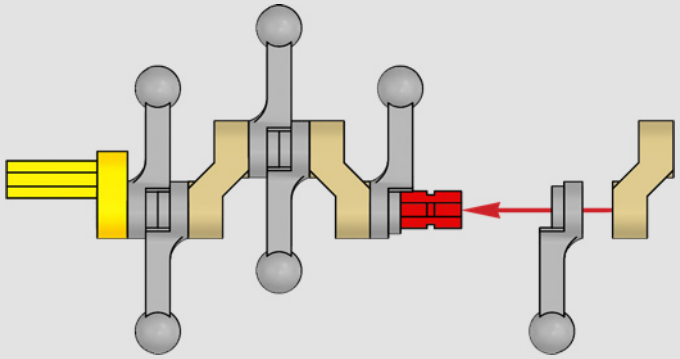

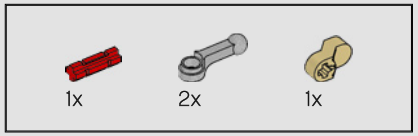

249

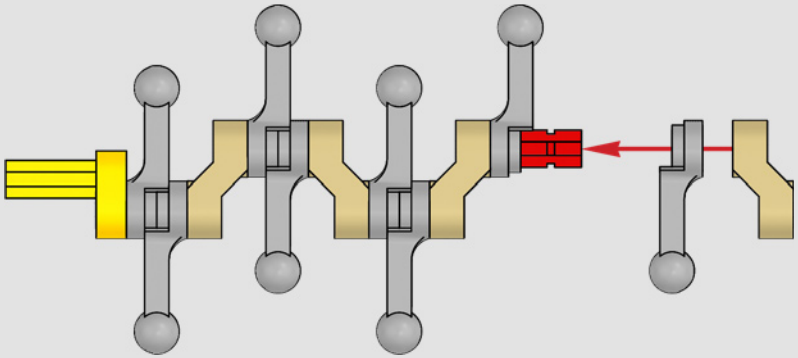

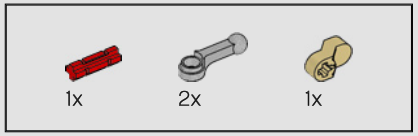

250

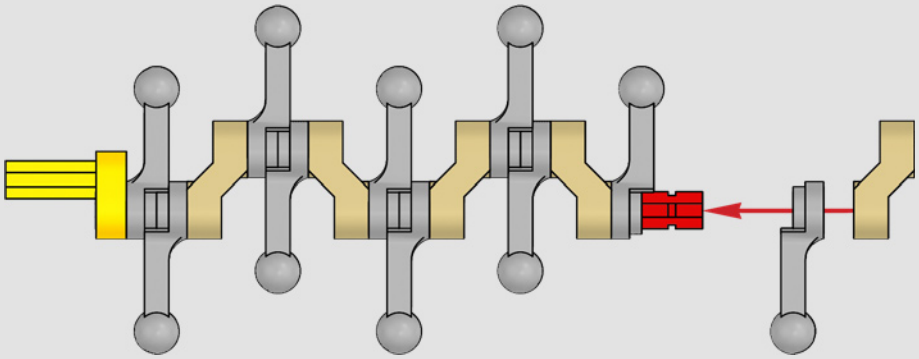

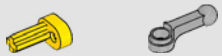

251

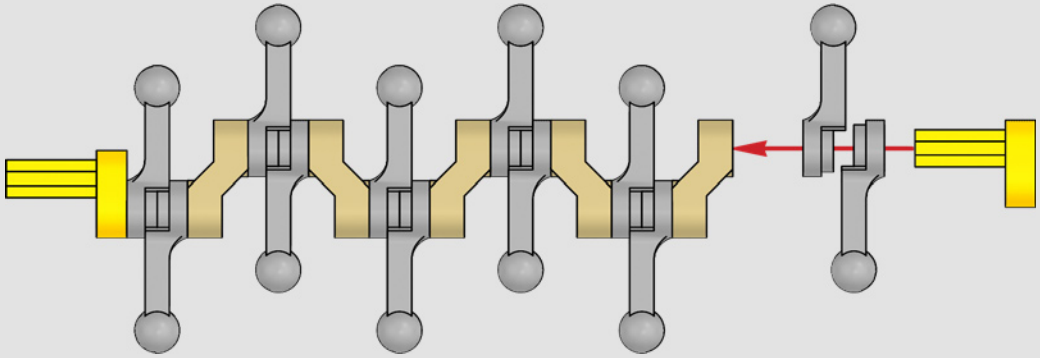

252

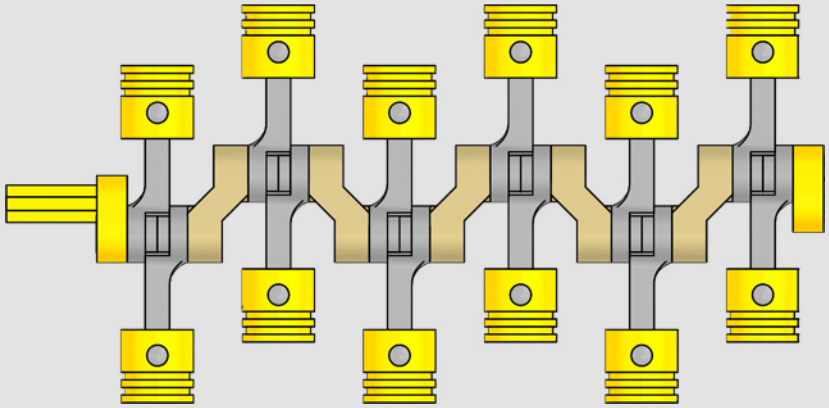

1:1

253

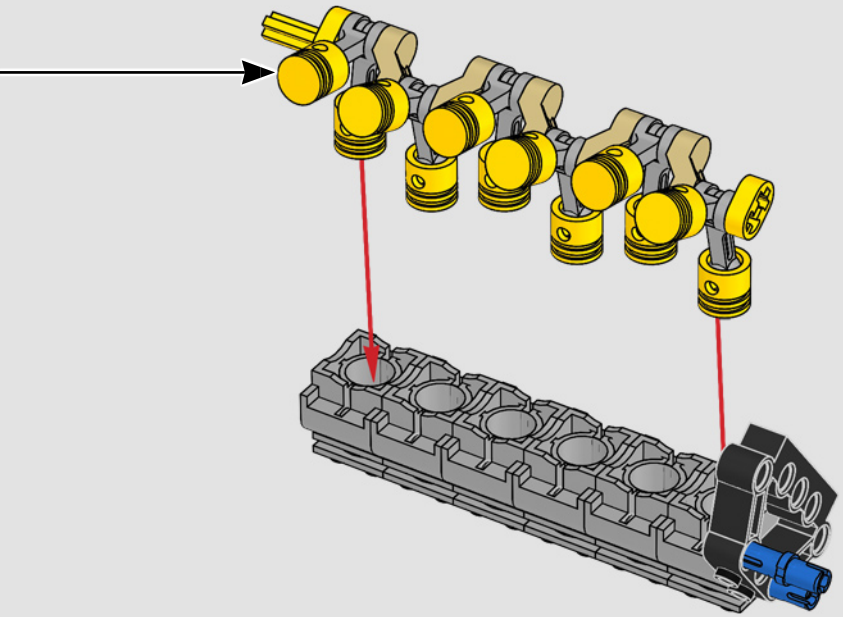

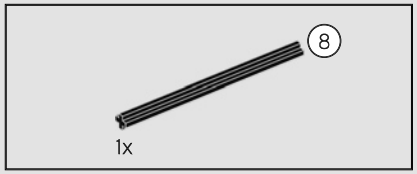

254

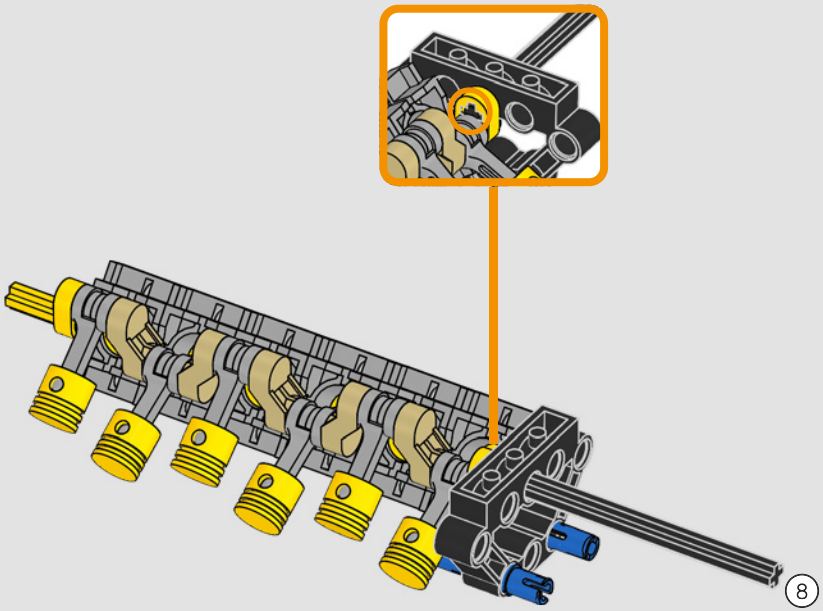

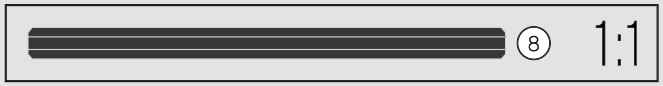

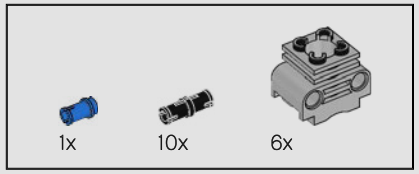

255

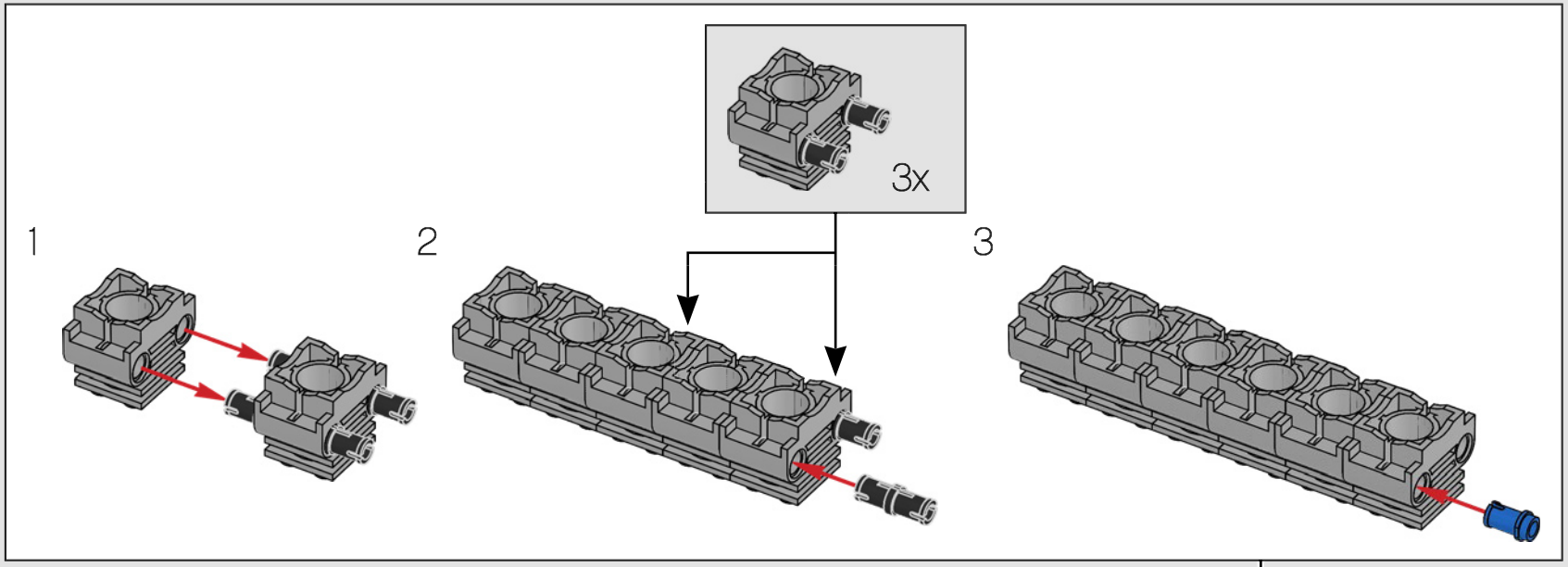

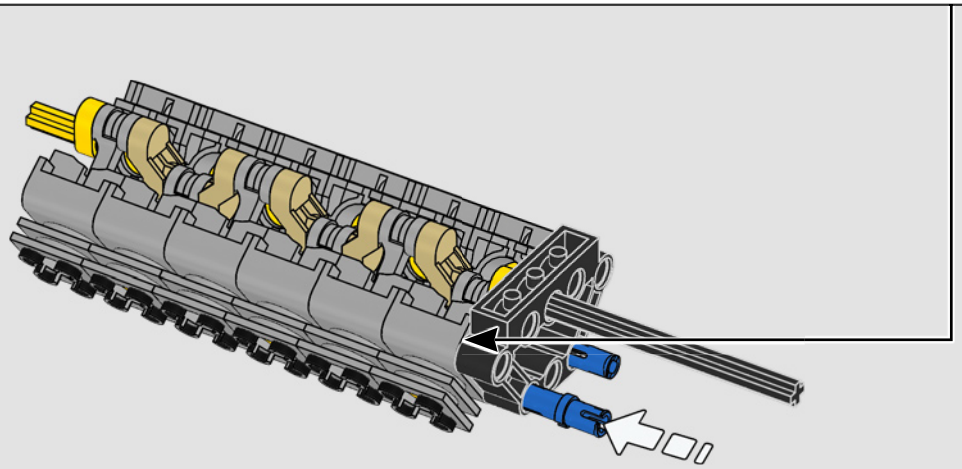

256

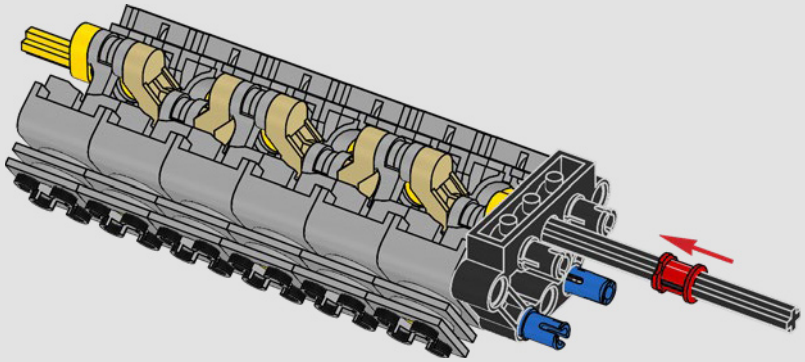

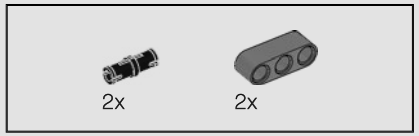

257

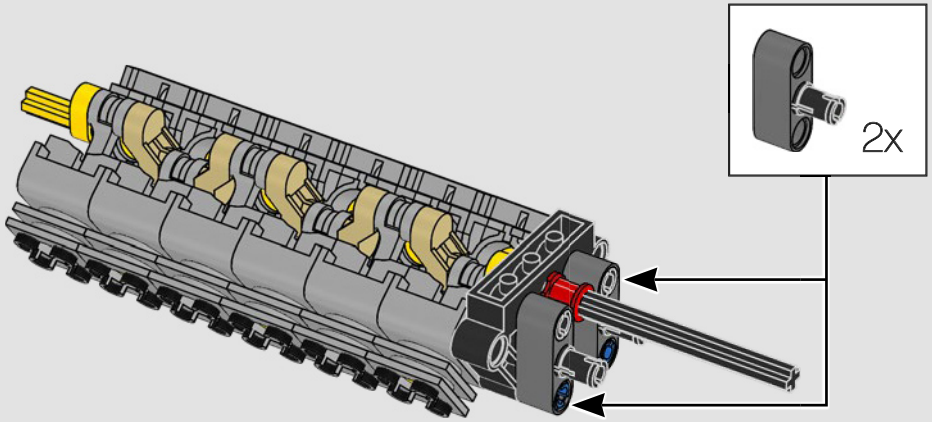

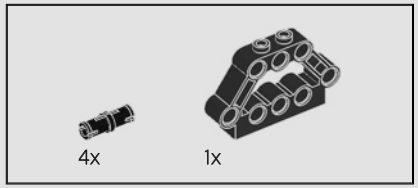

258

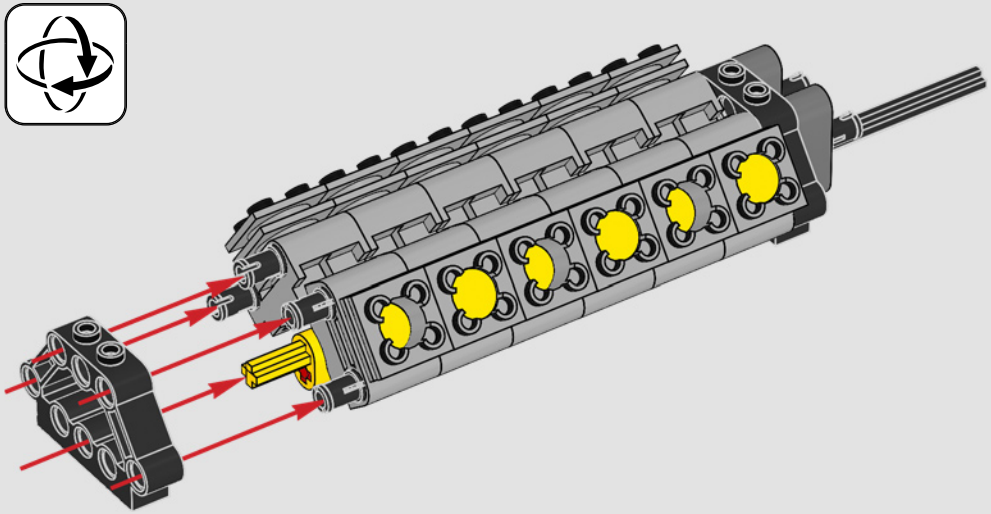

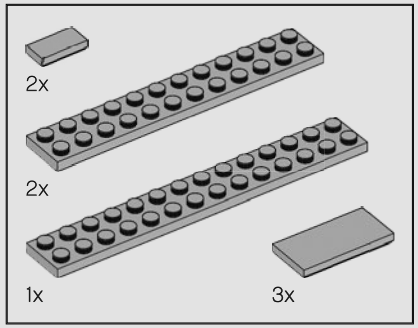

259

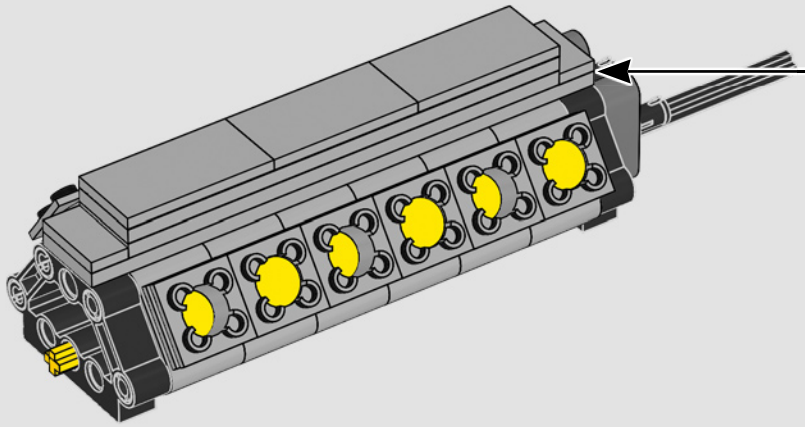

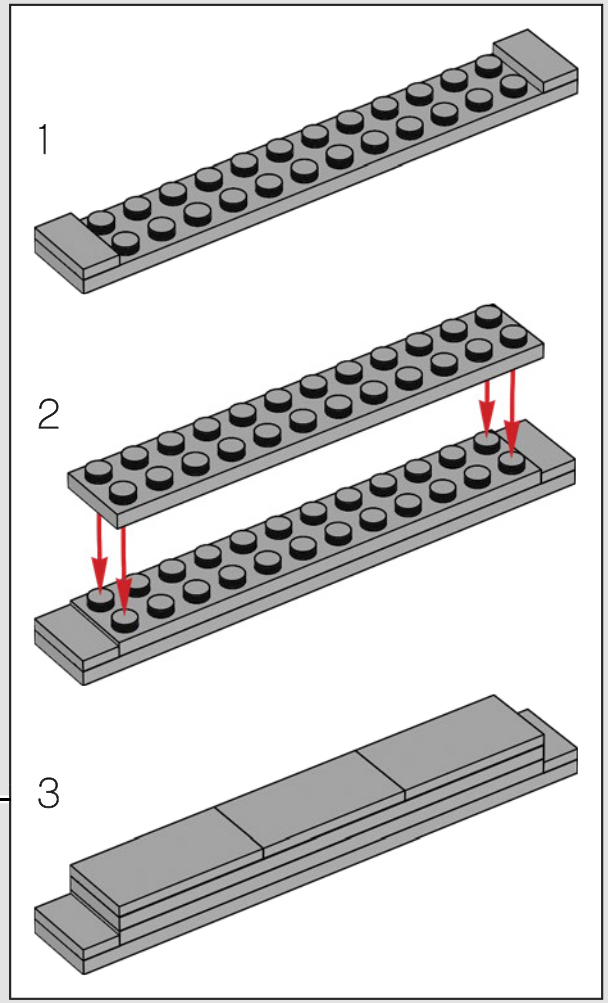

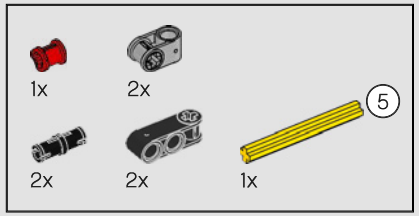

260

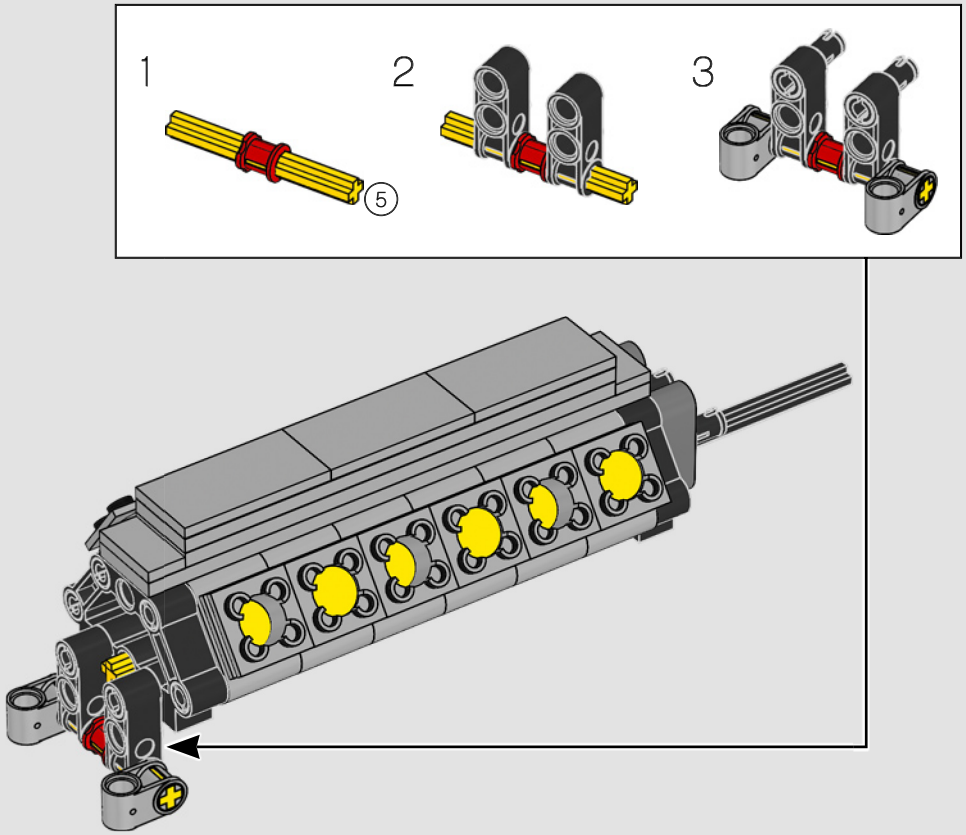

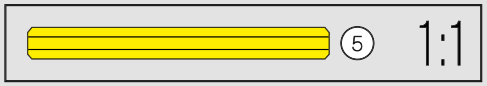

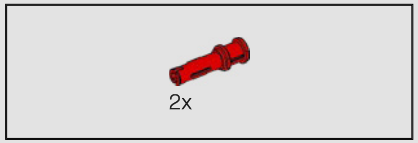

261

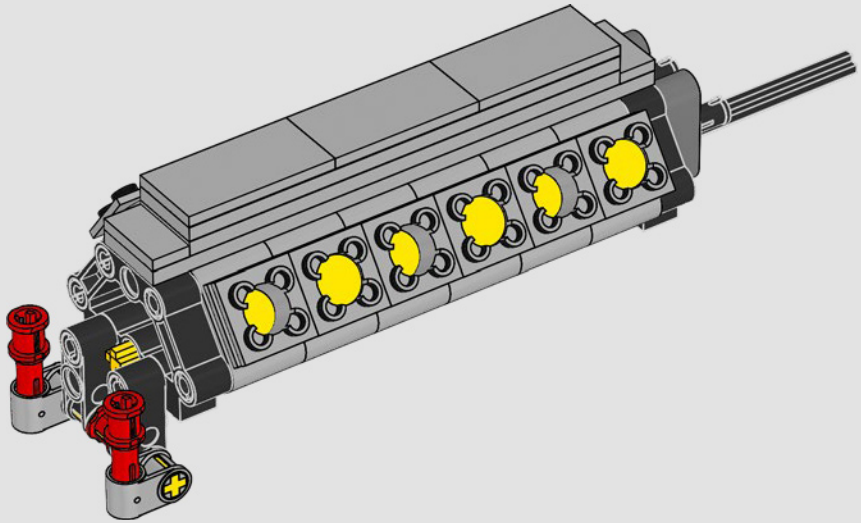

262

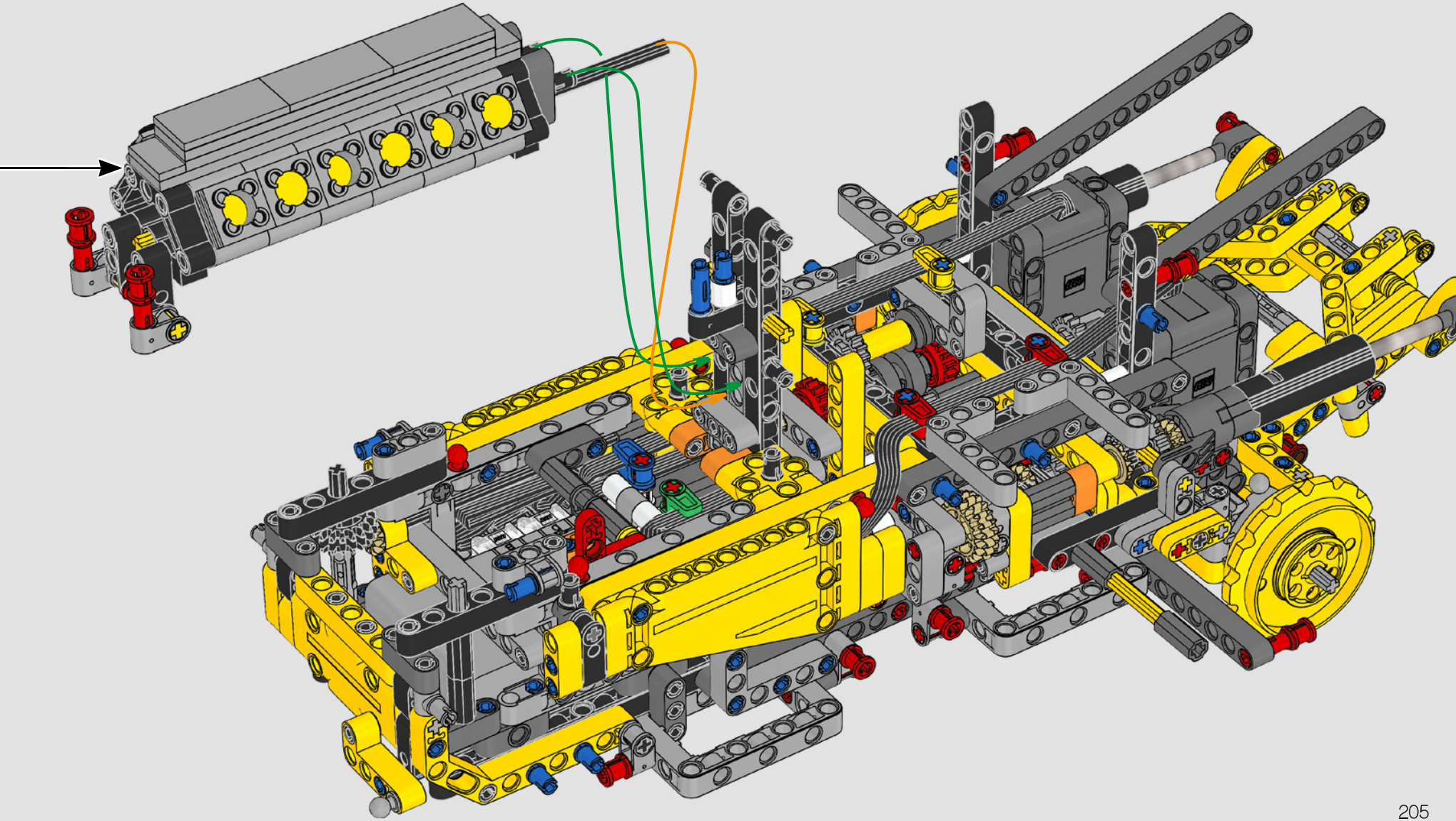

263

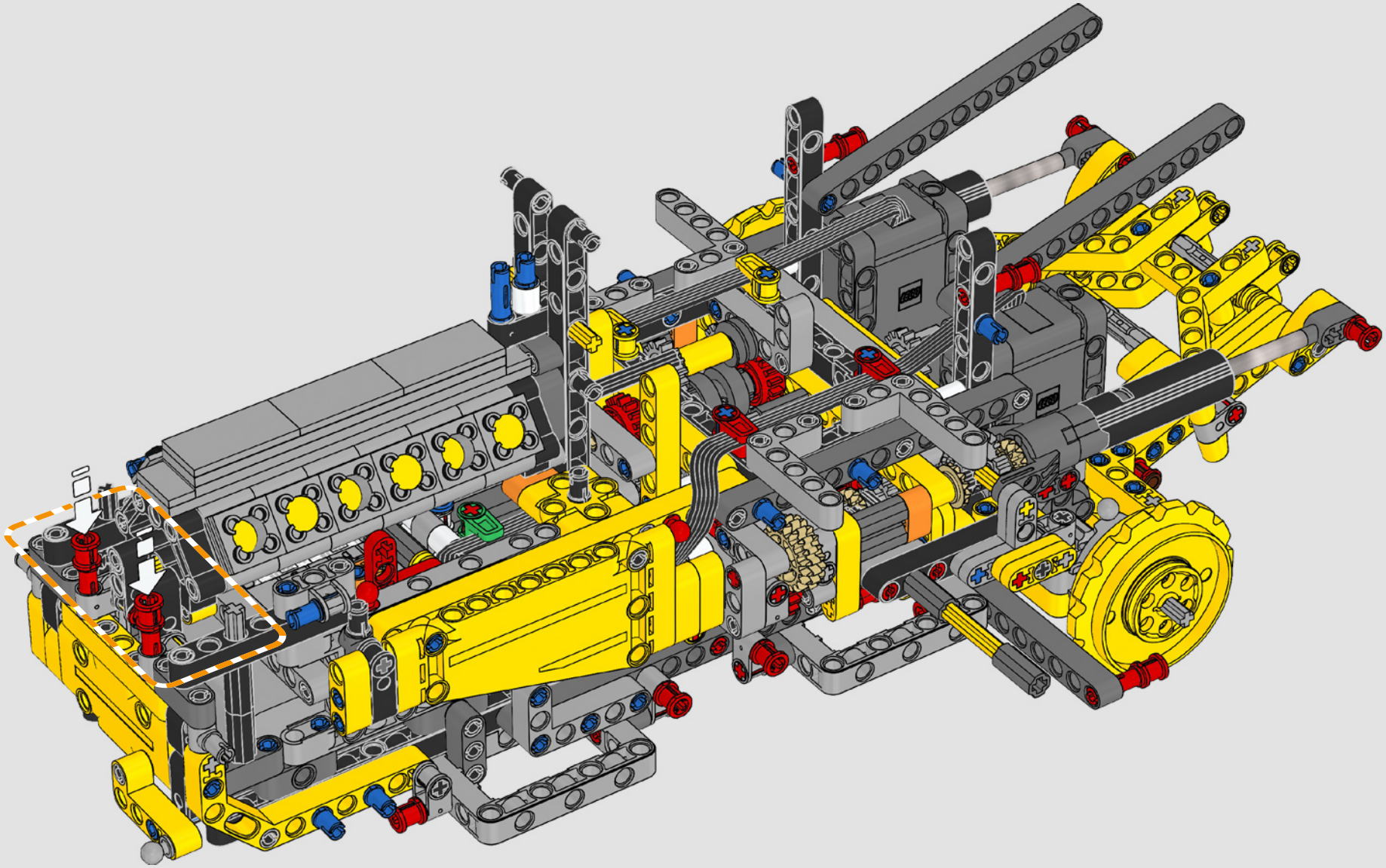

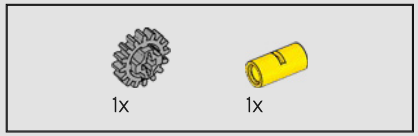

264

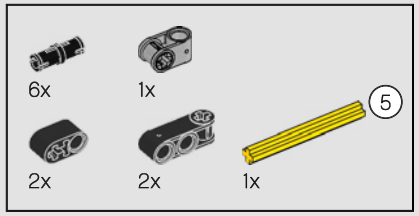

265

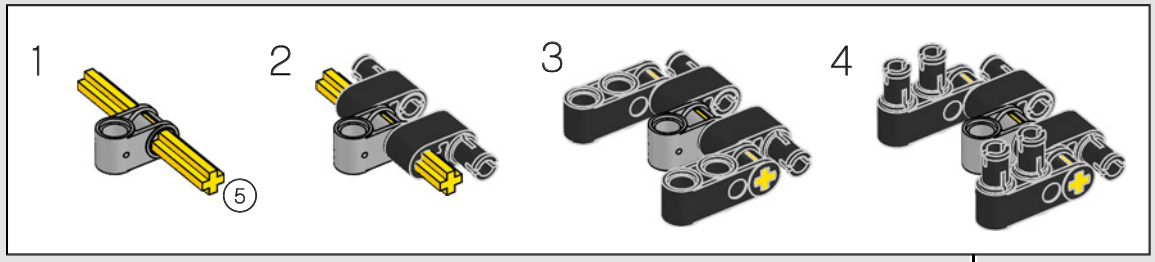

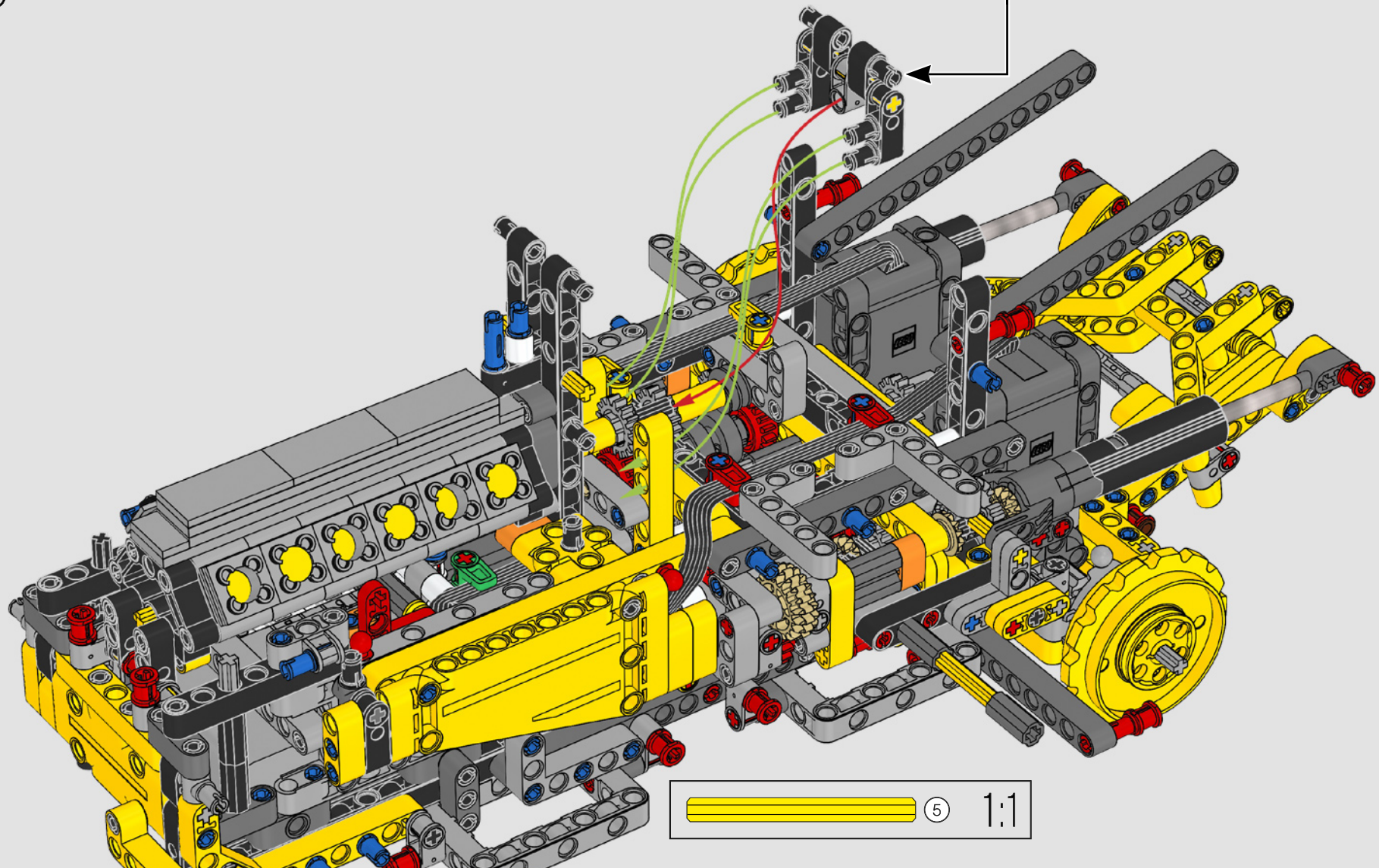

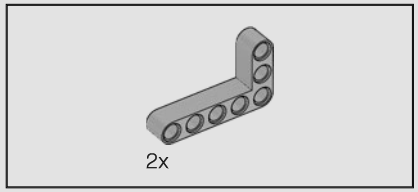

266

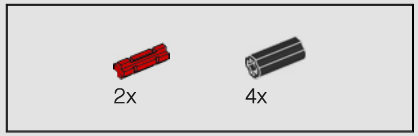

267

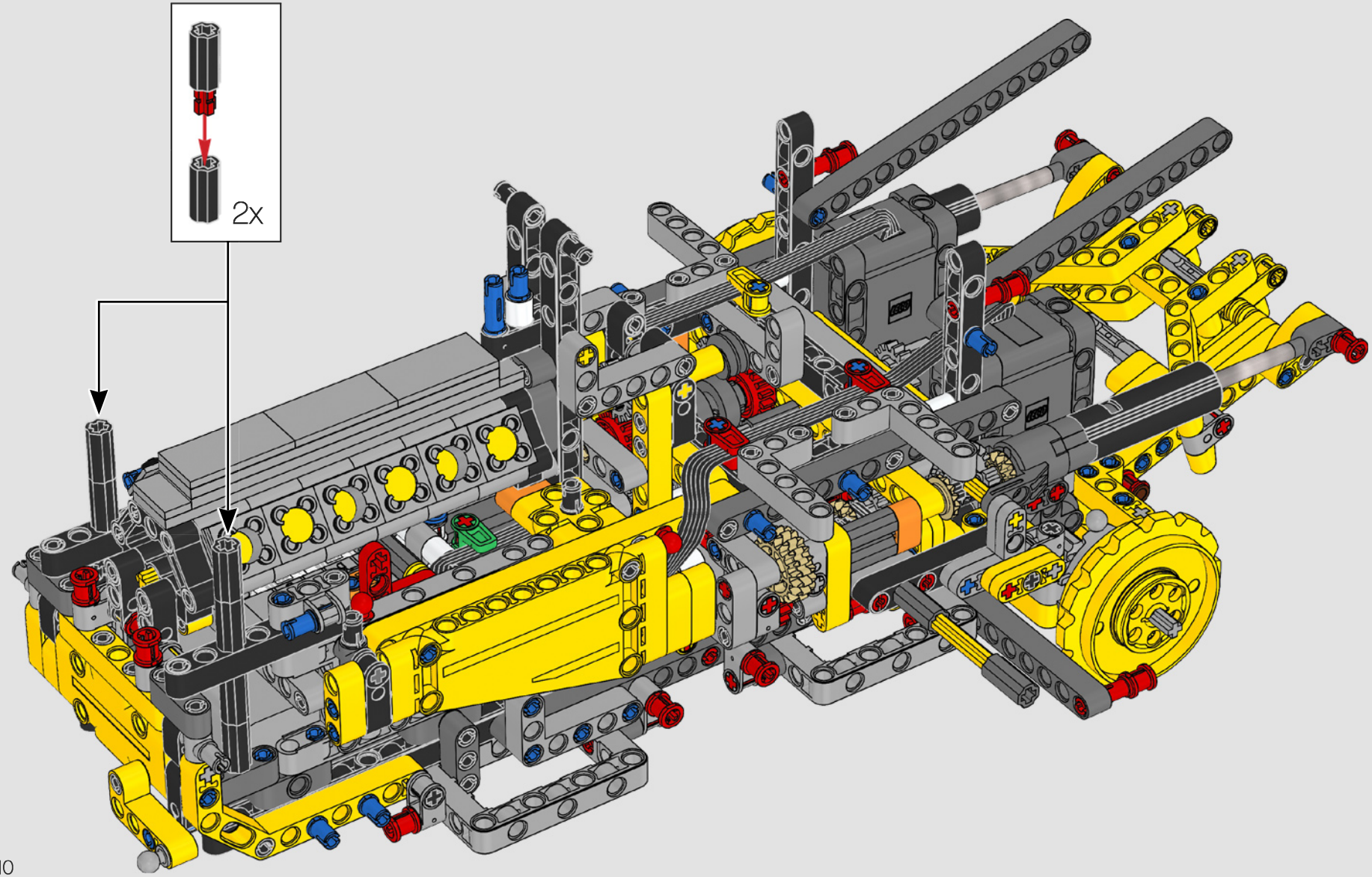

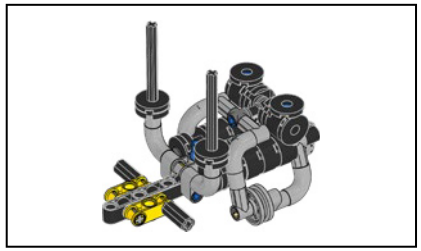

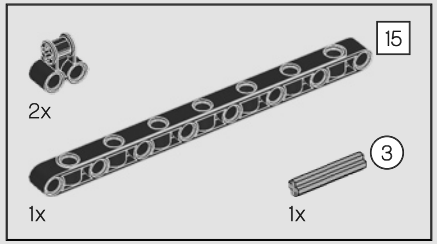

268

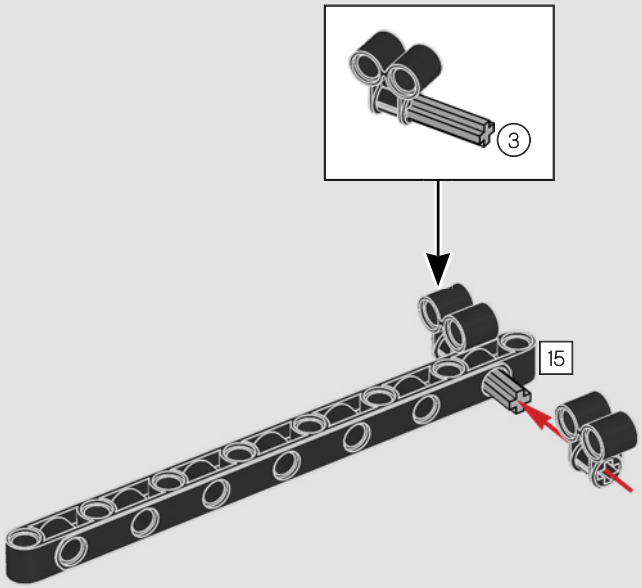

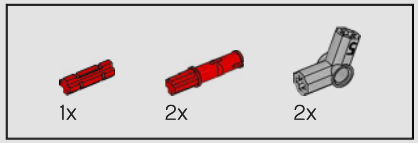

269

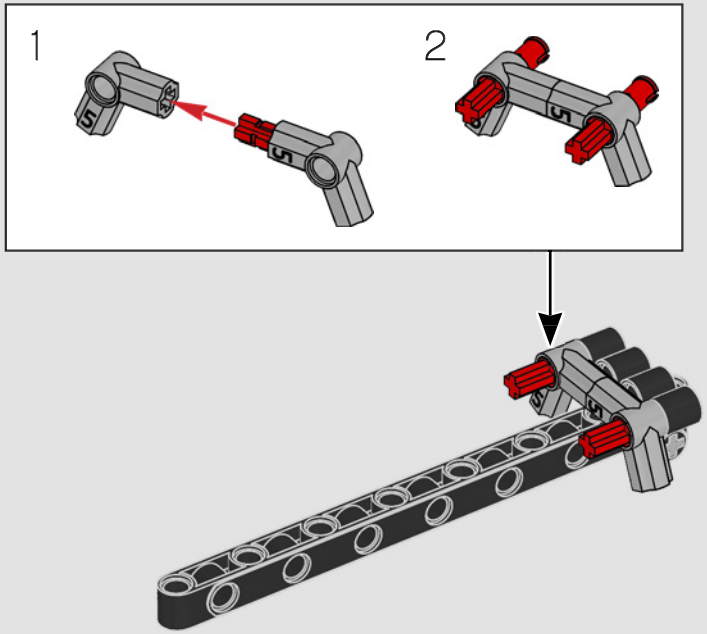

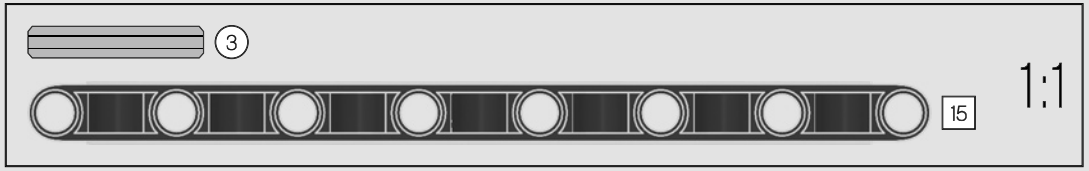

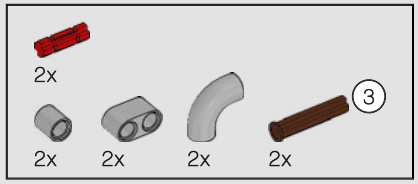

270

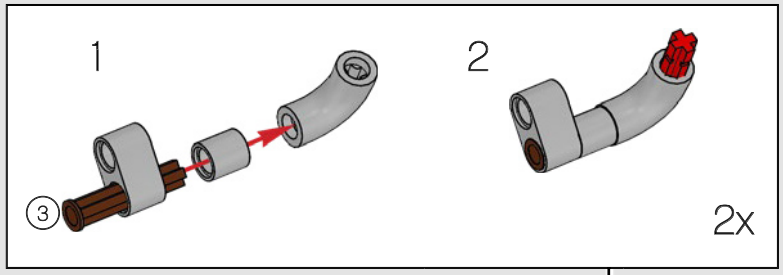

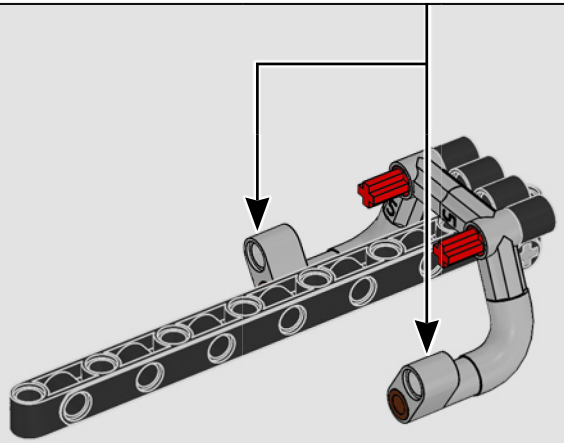

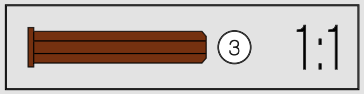

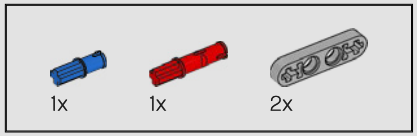

271

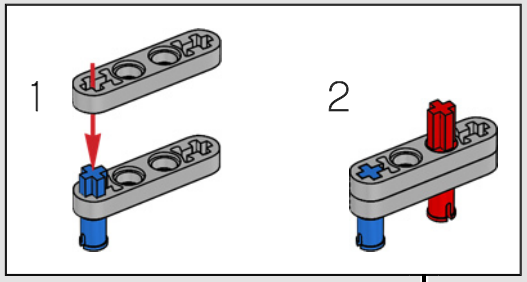

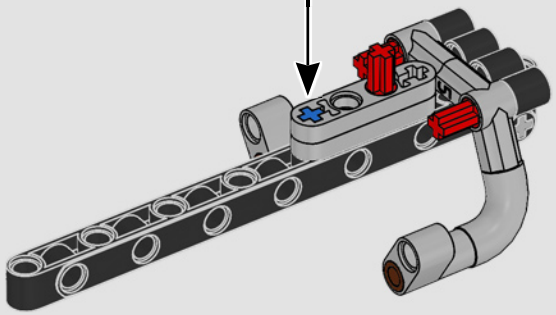

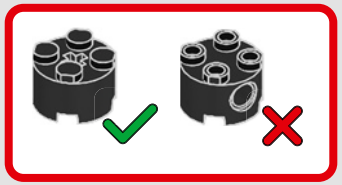

272

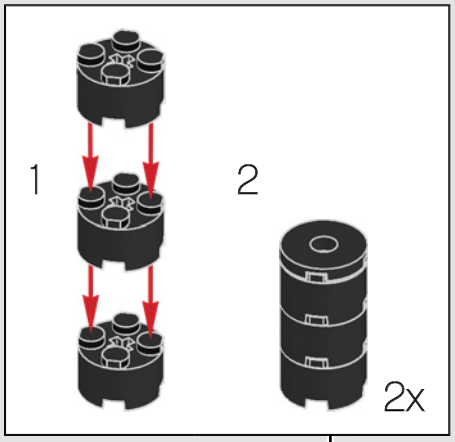

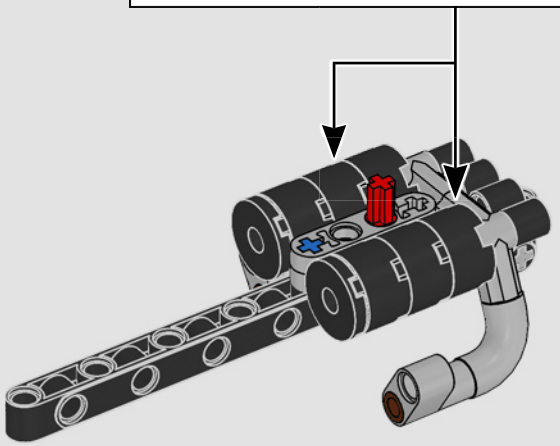

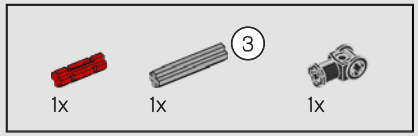

273

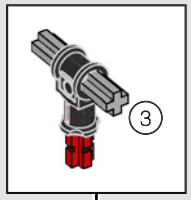

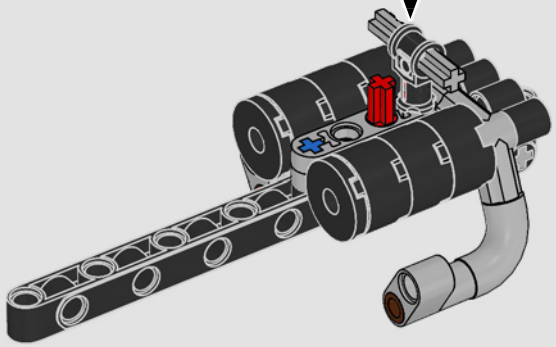

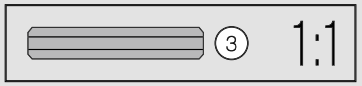

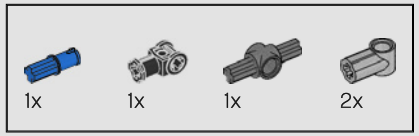

274

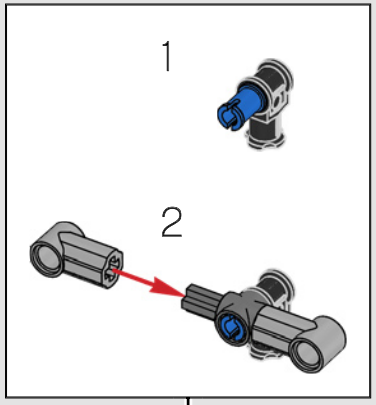

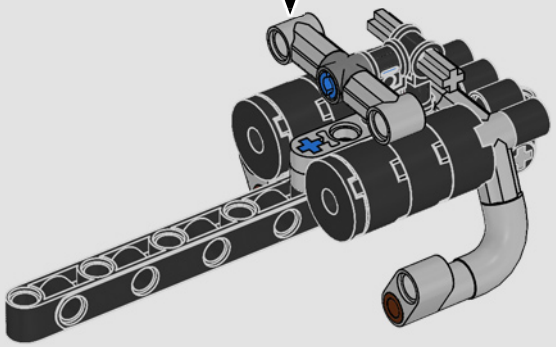

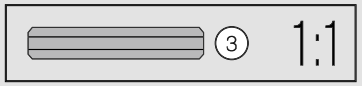

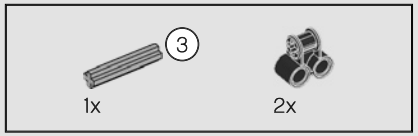

275

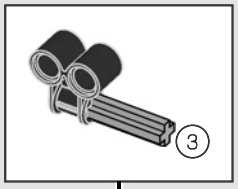

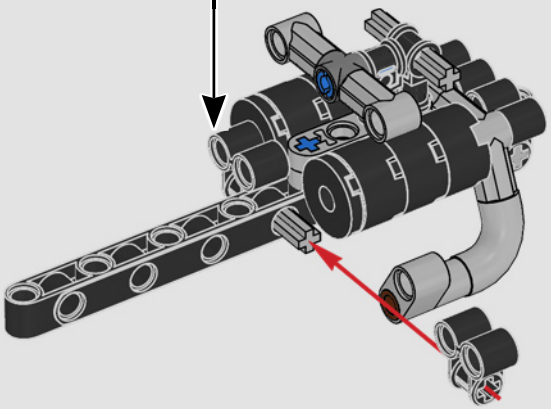

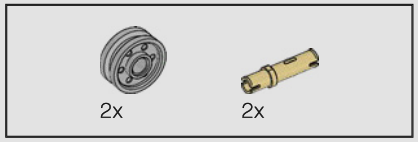

276

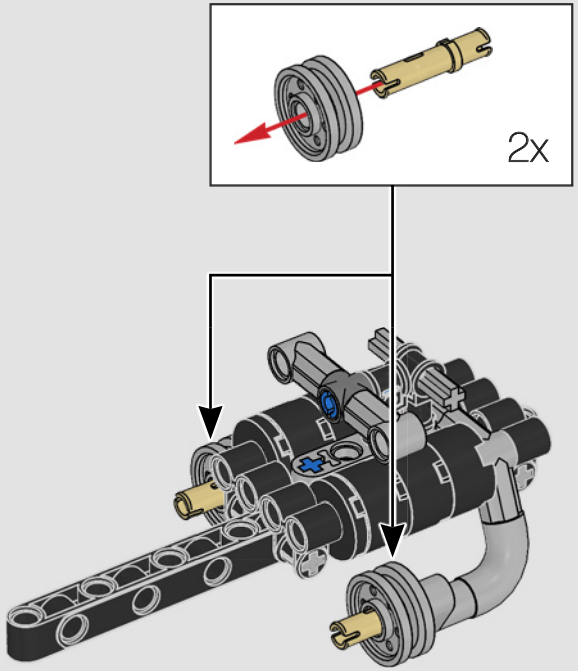

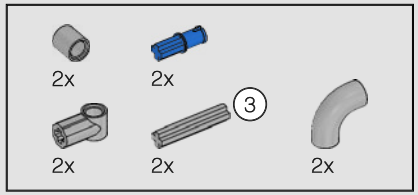

277

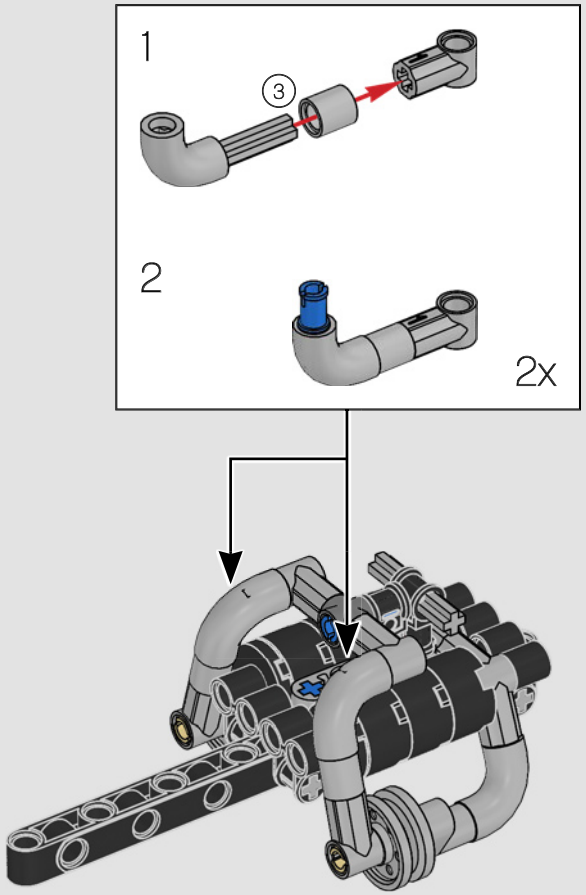

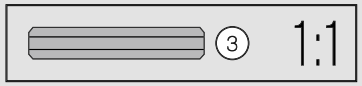

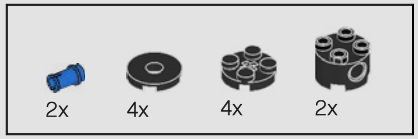

278

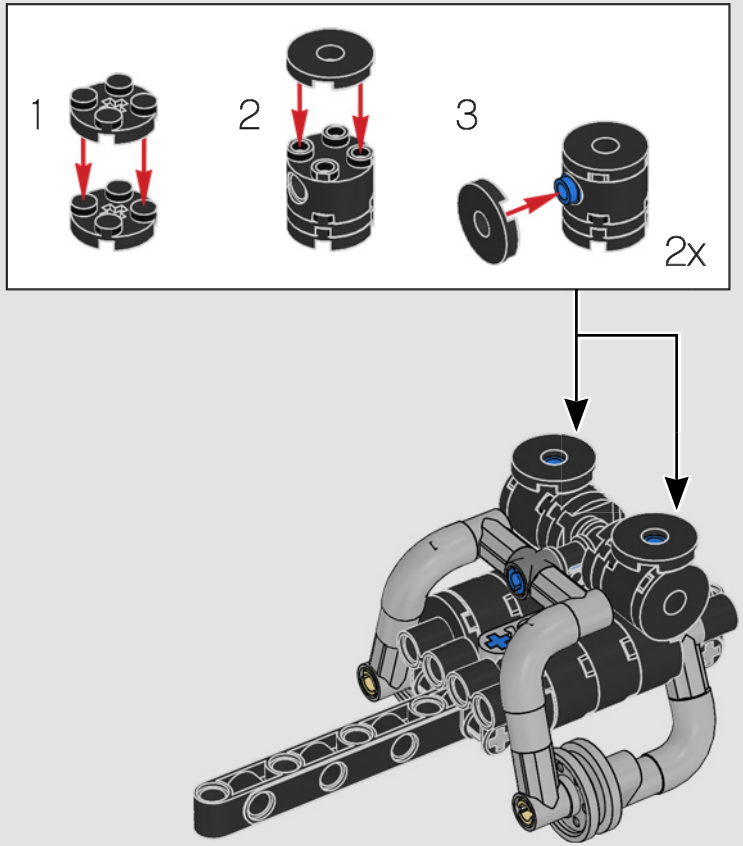

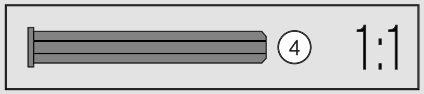

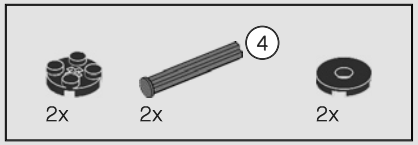

279

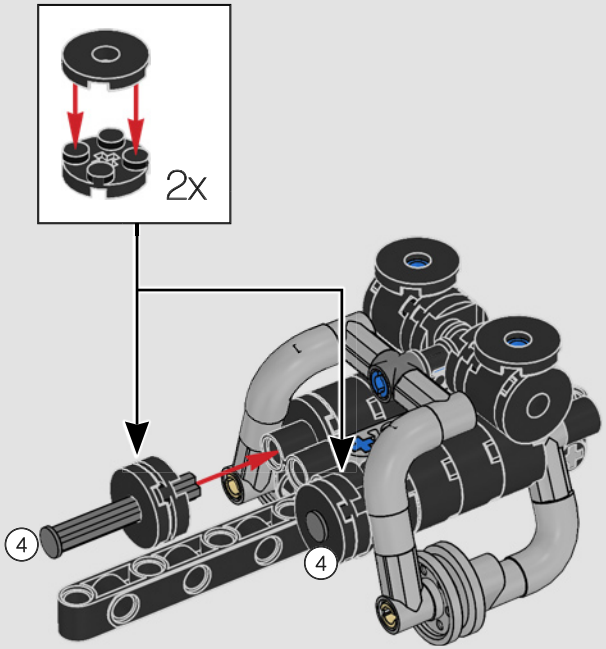

280

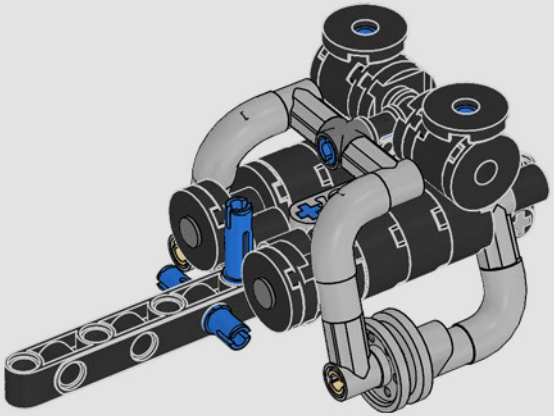

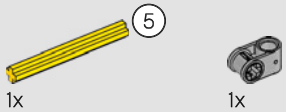

281

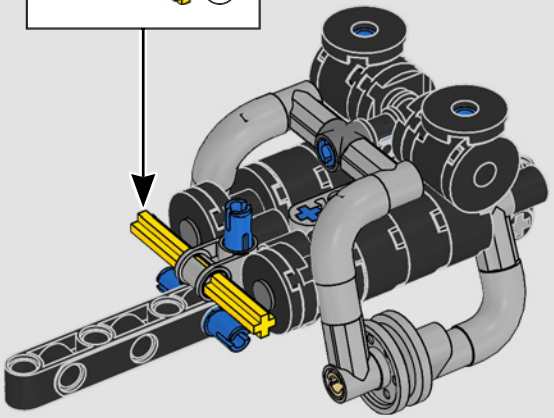

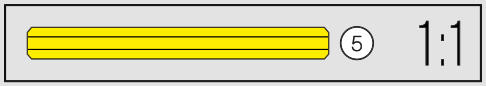

2x

282

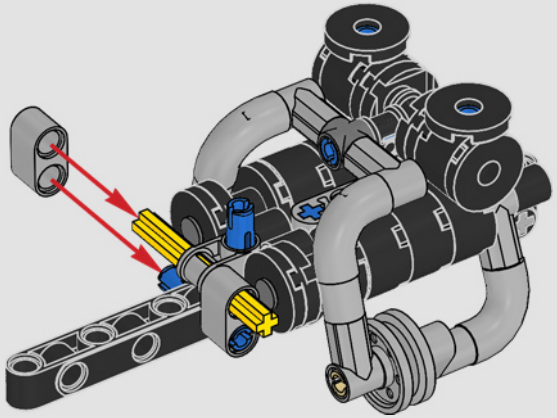

2x

283

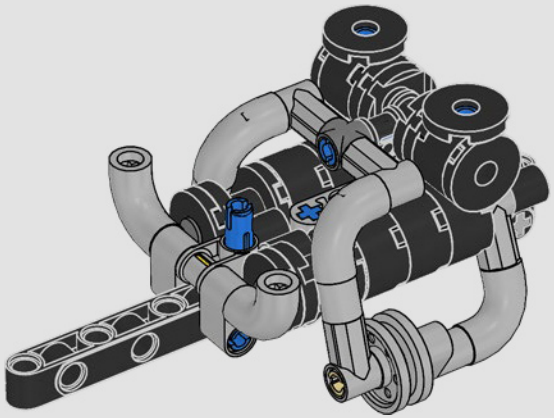

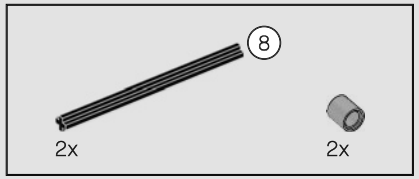

284

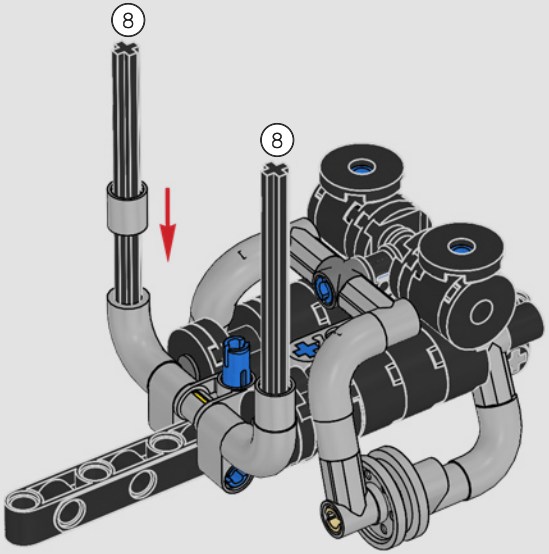

285

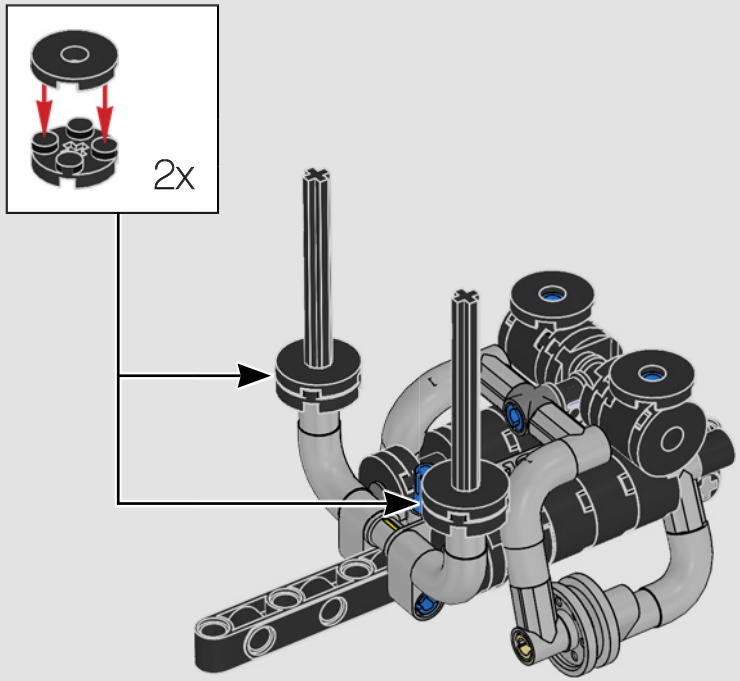

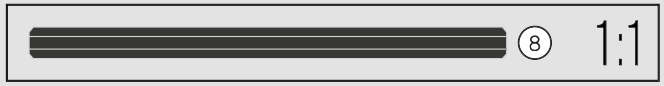

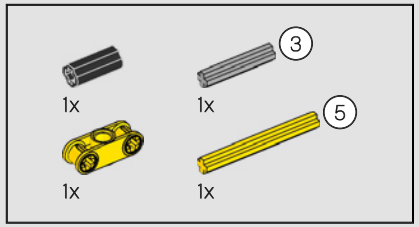

286

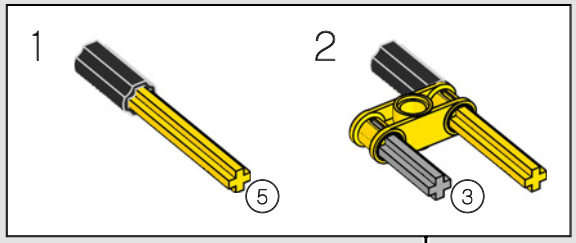

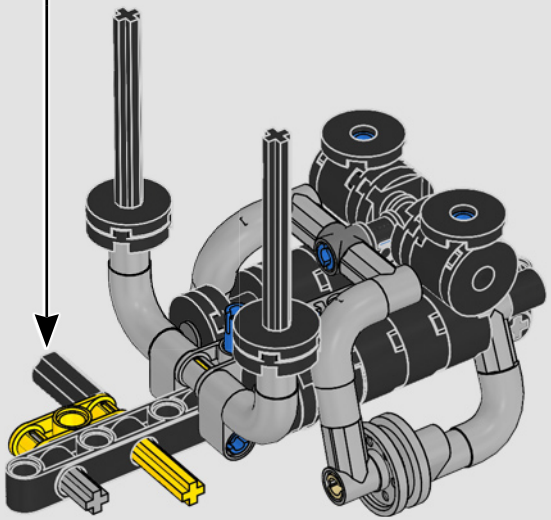

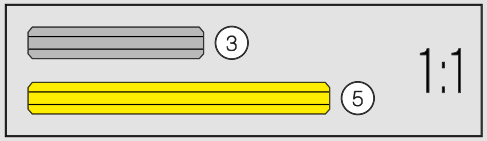

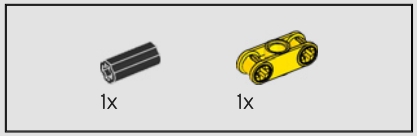

287

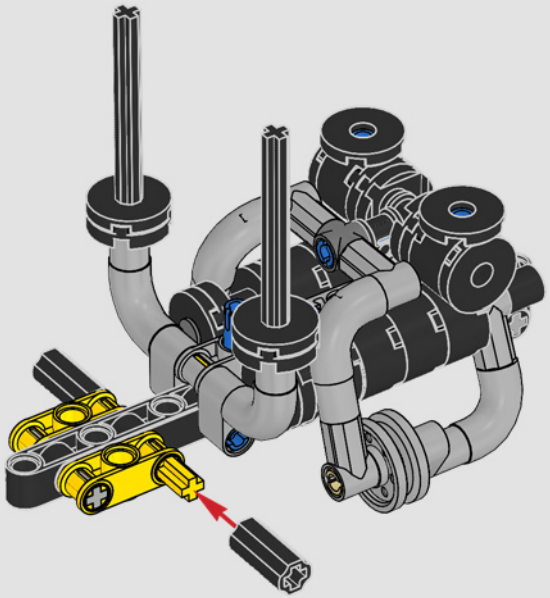

288

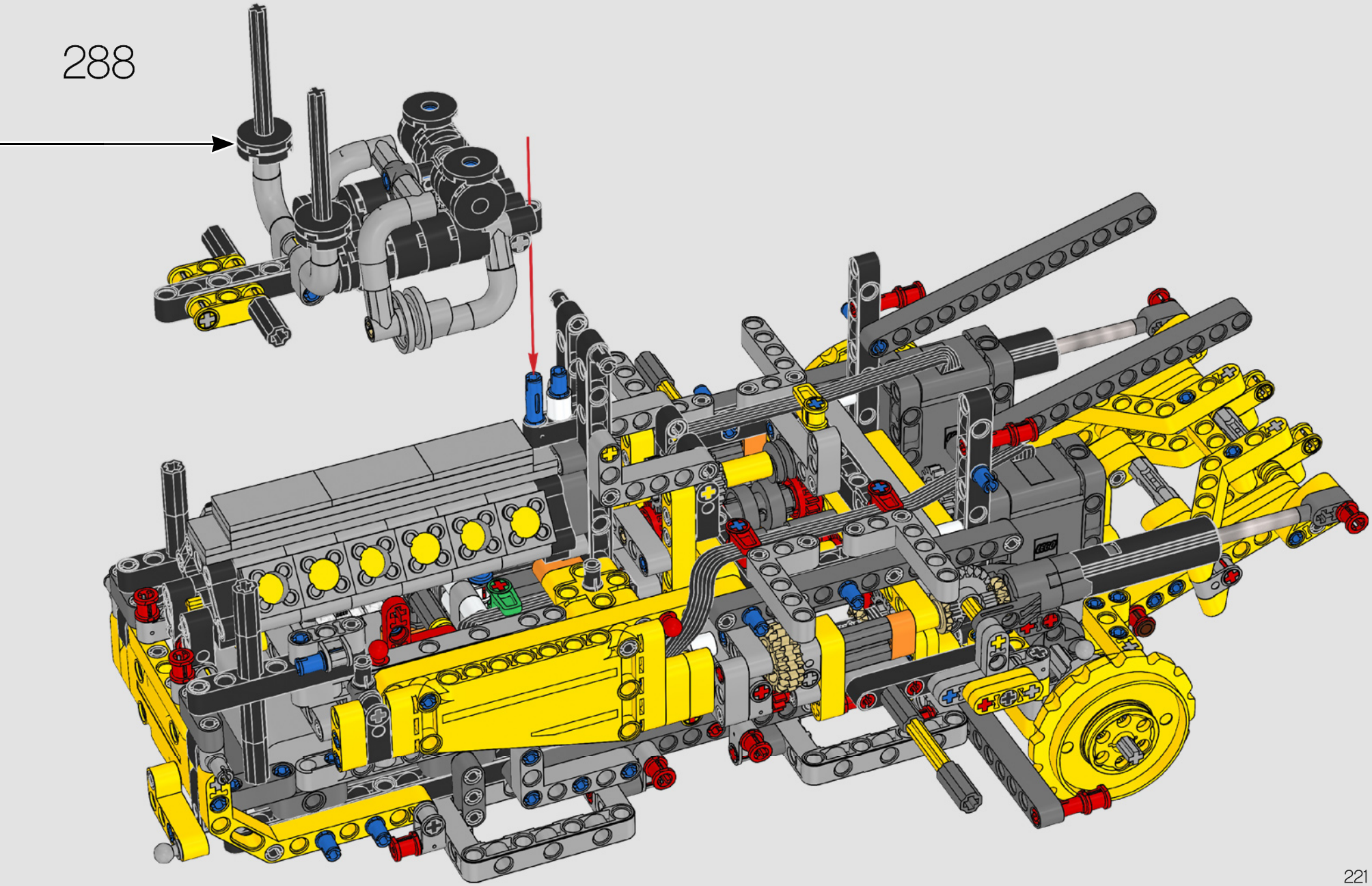

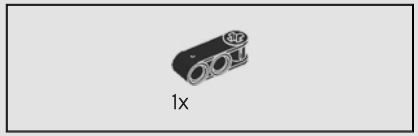

289

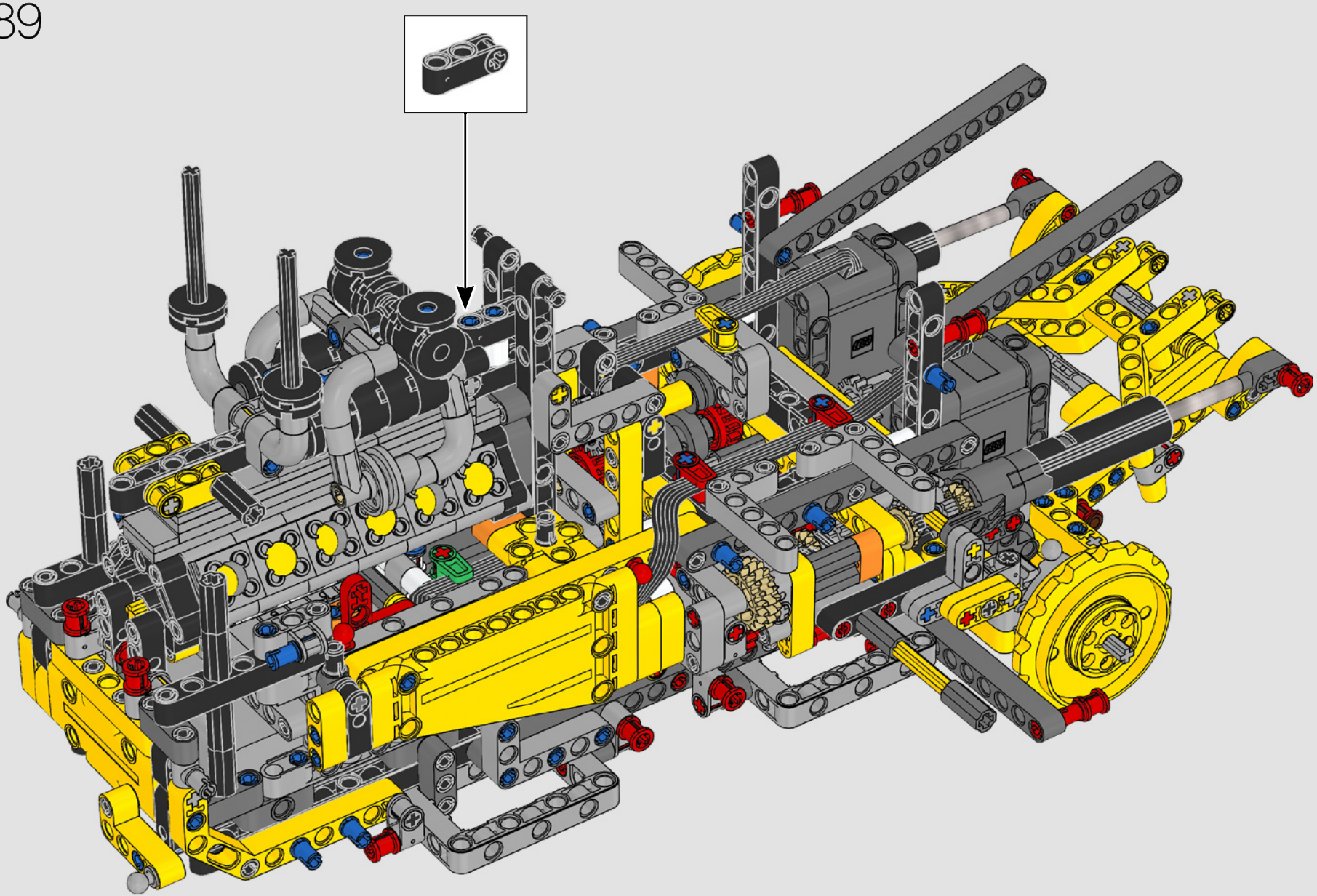

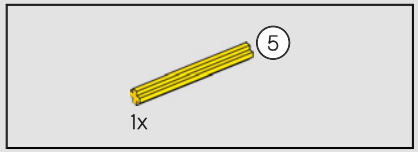

290

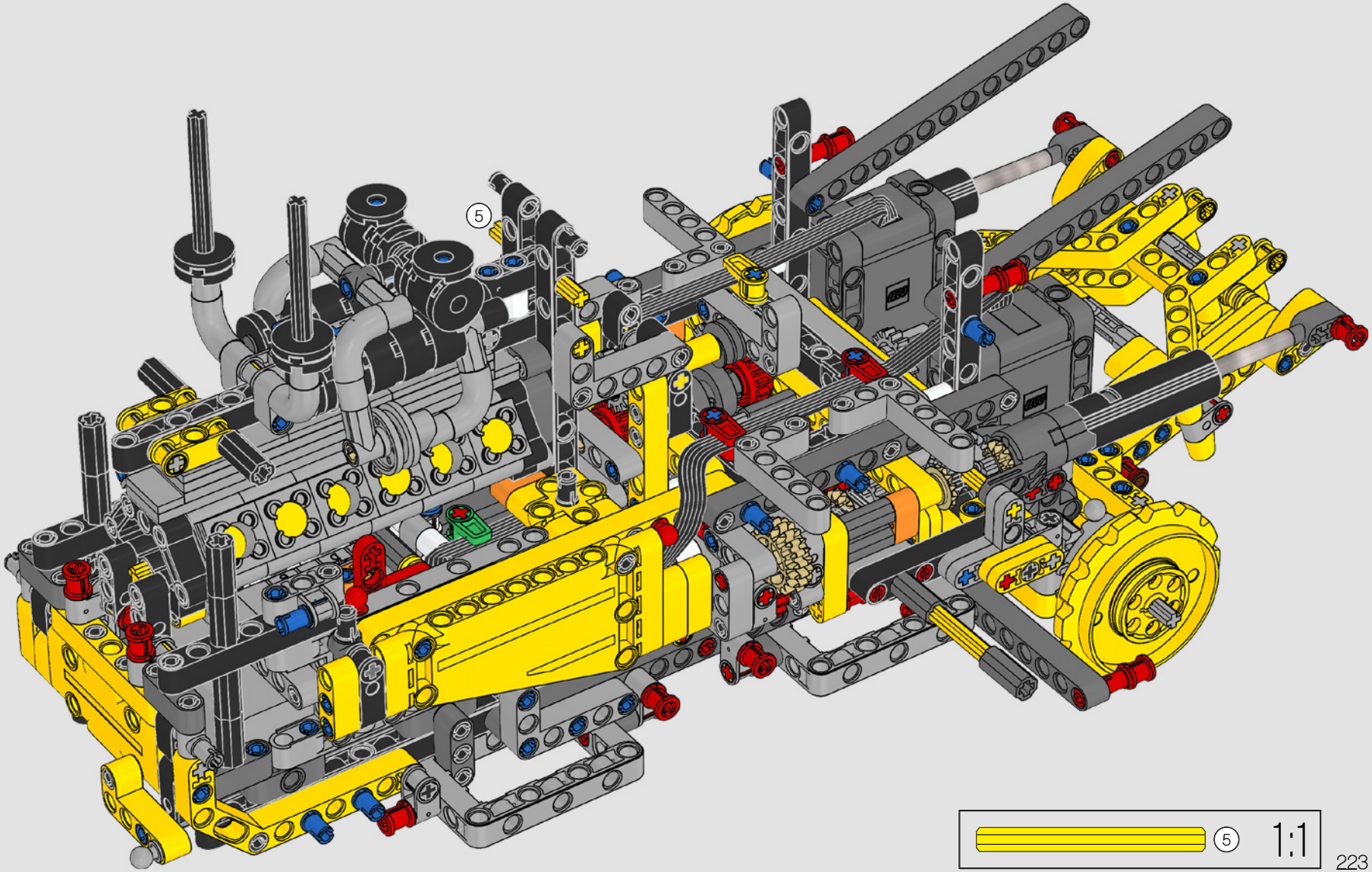

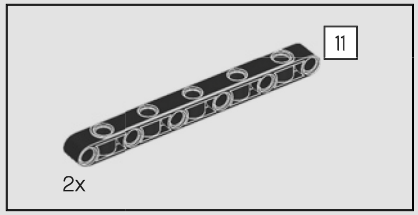

291

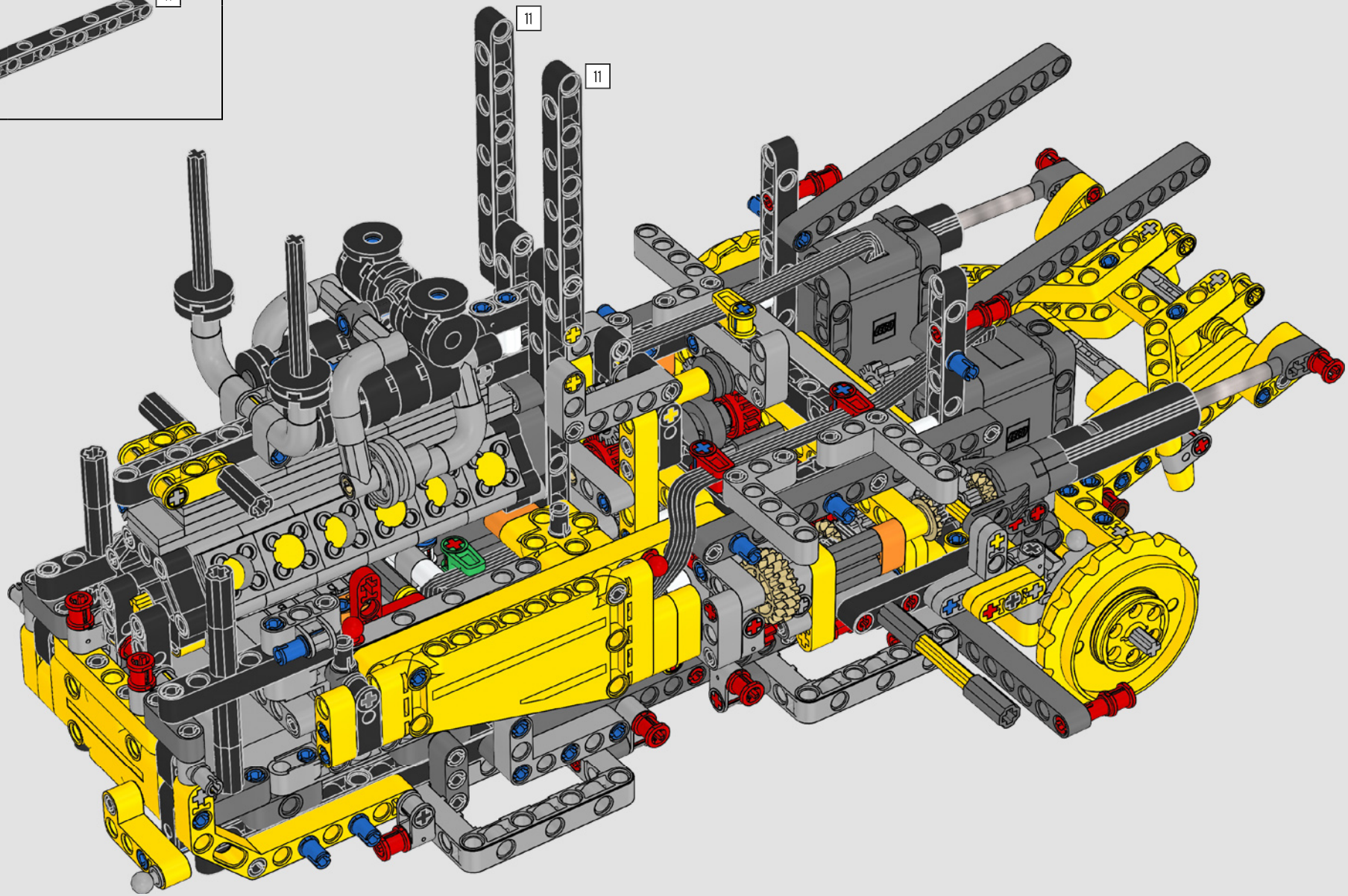

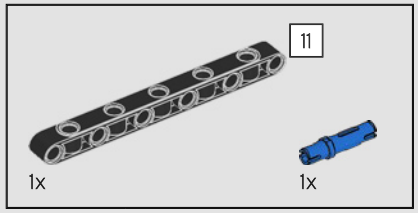

292

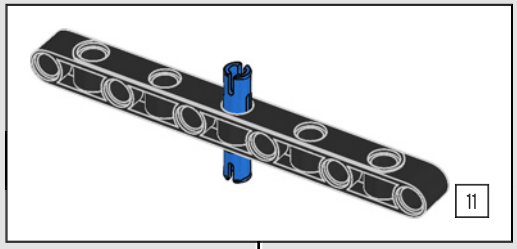

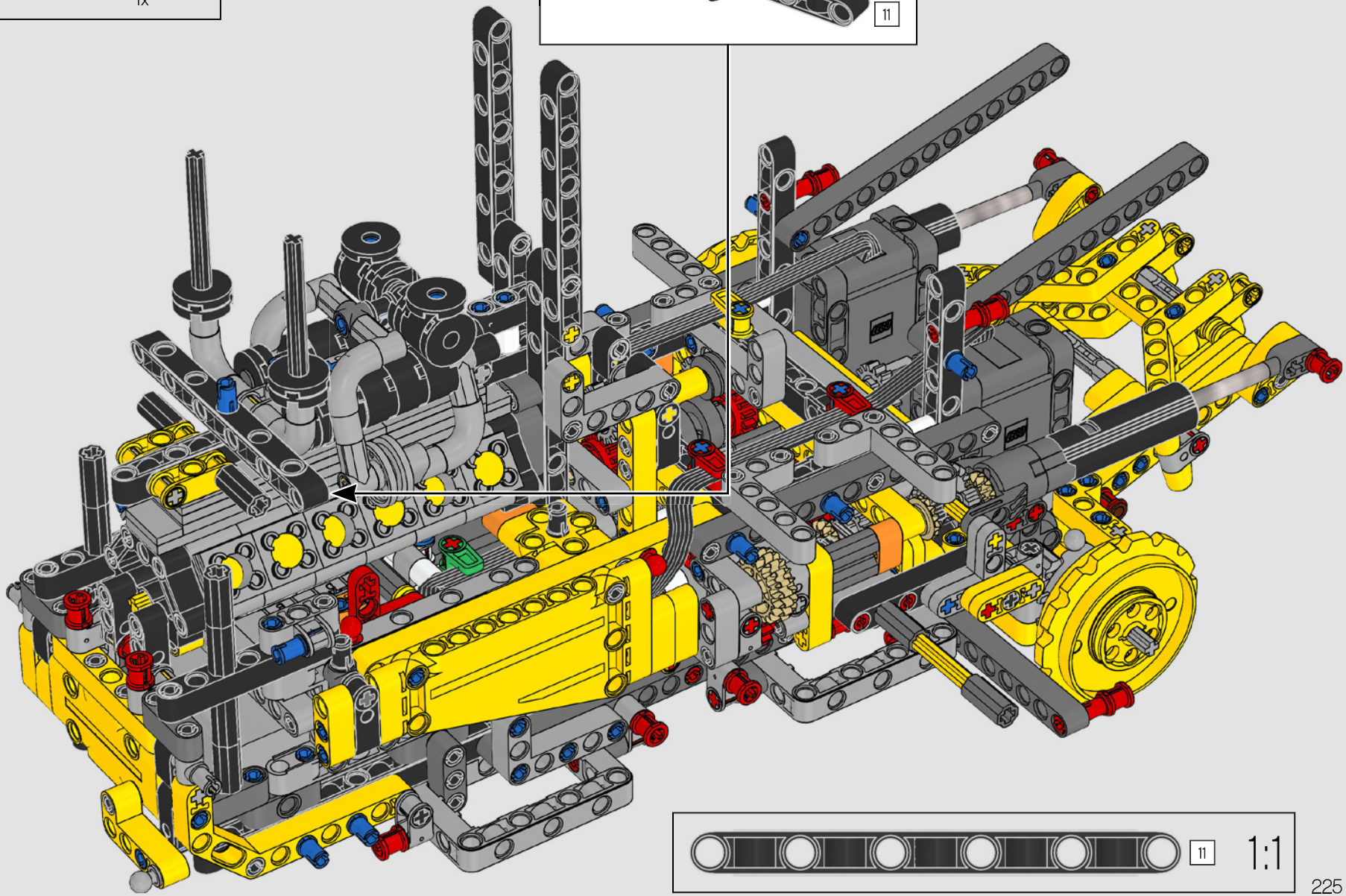

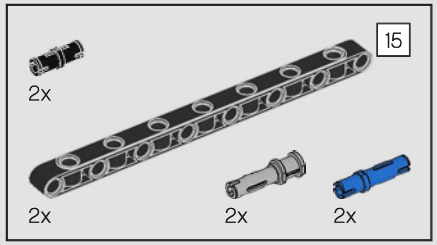

293

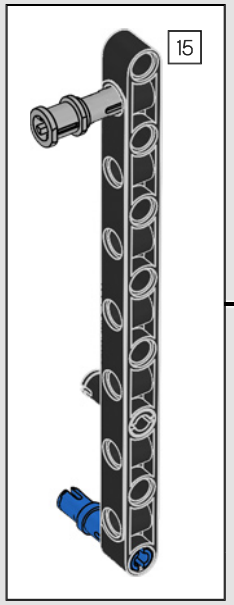

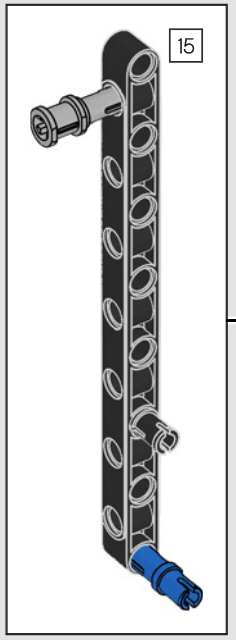

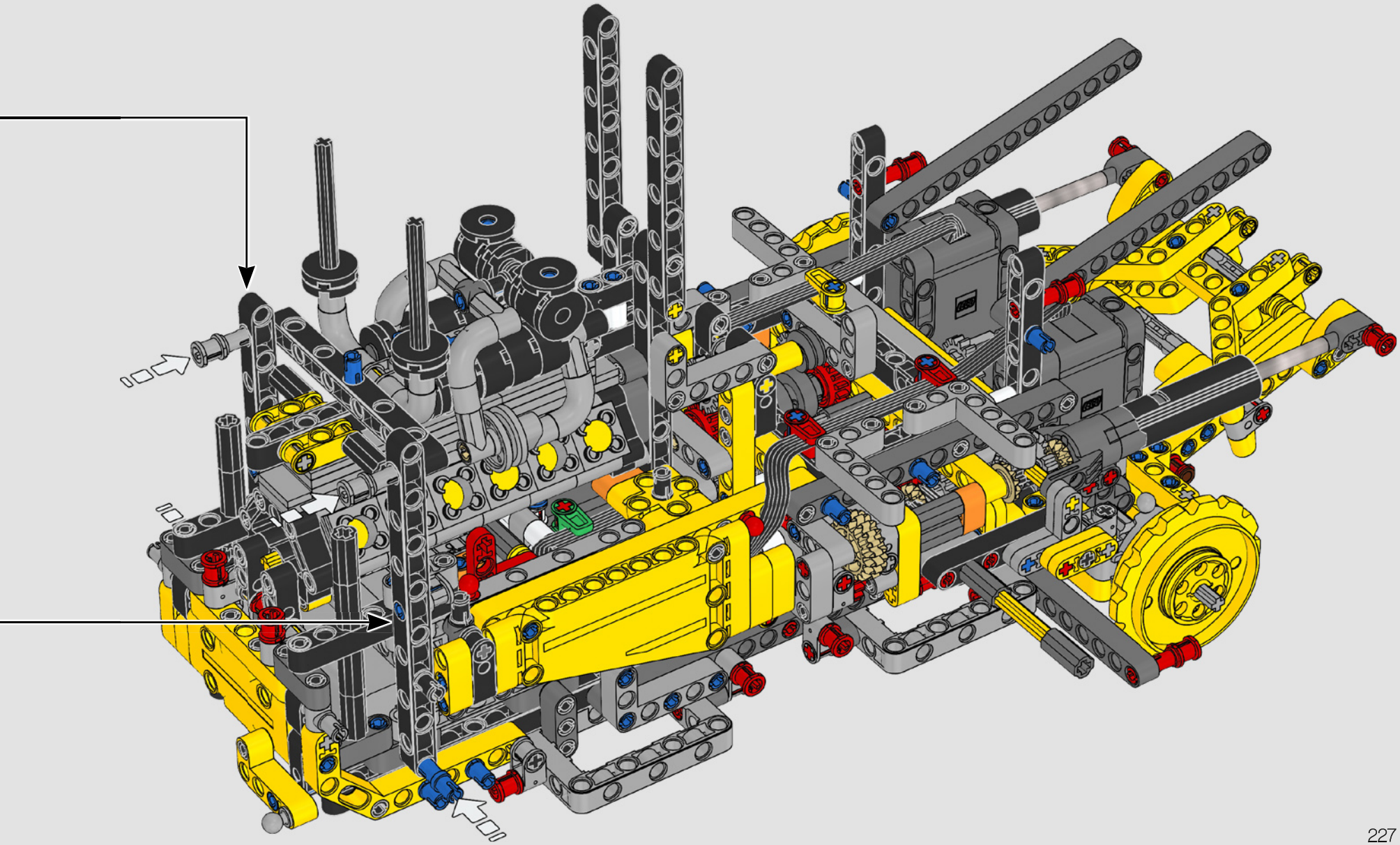

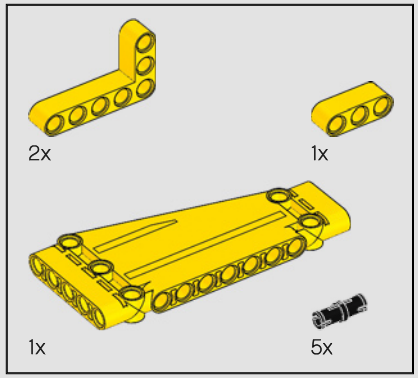

294

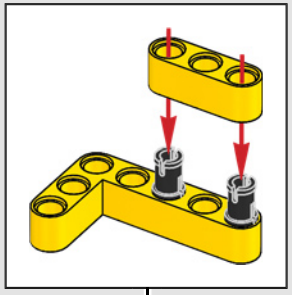

1

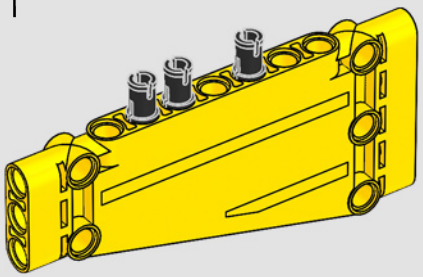

2

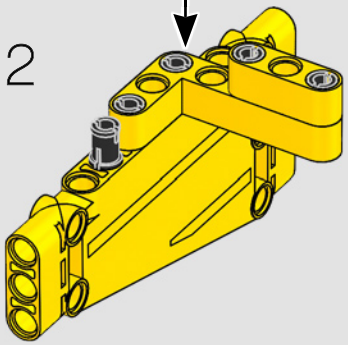

3

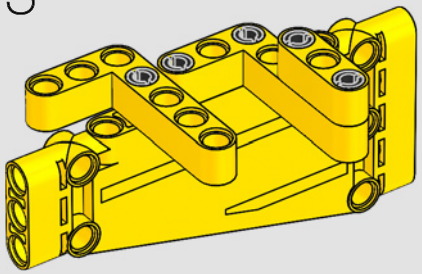

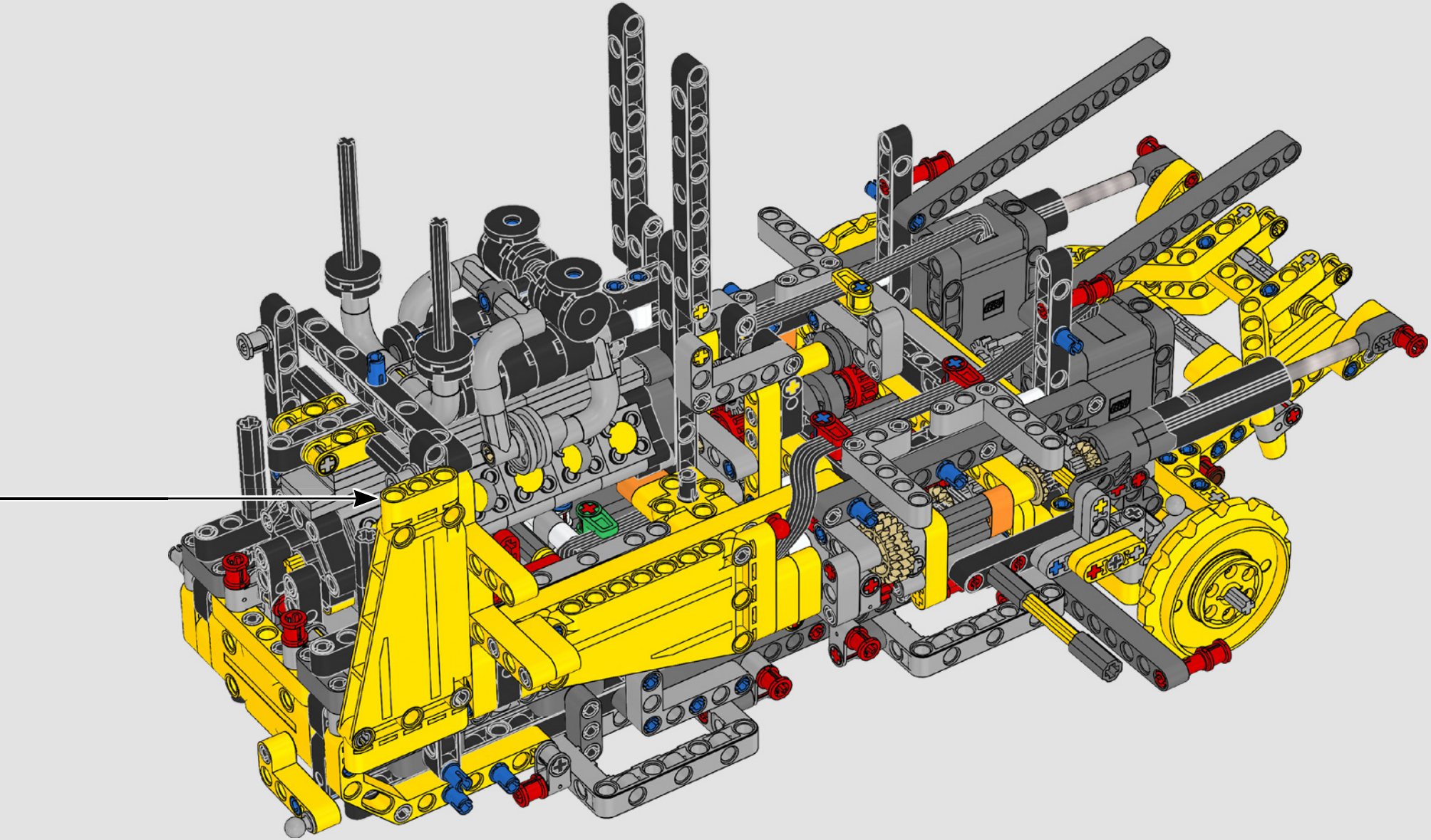

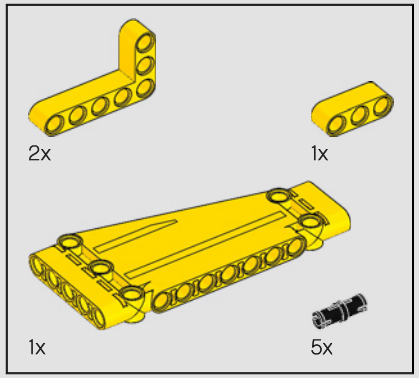

295

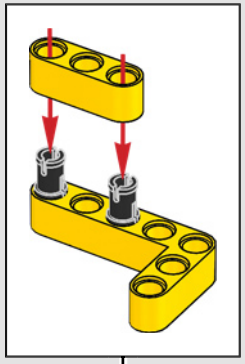

1

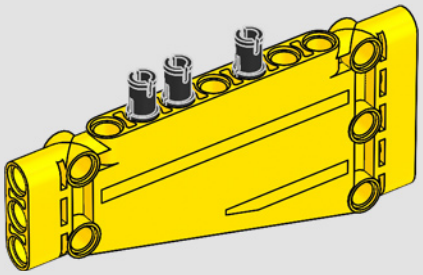

2

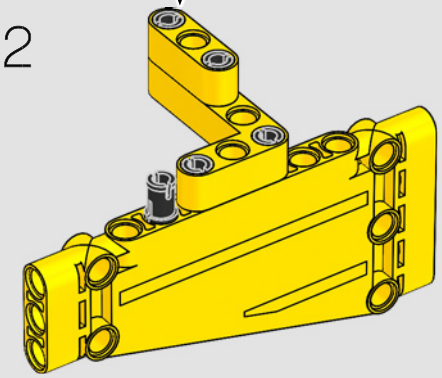

3

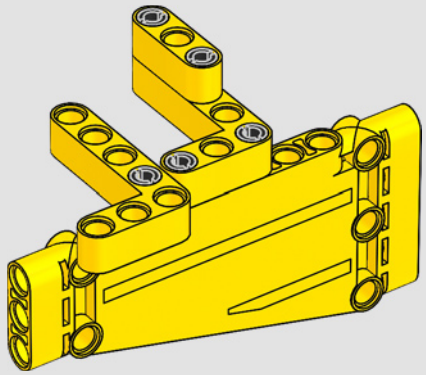

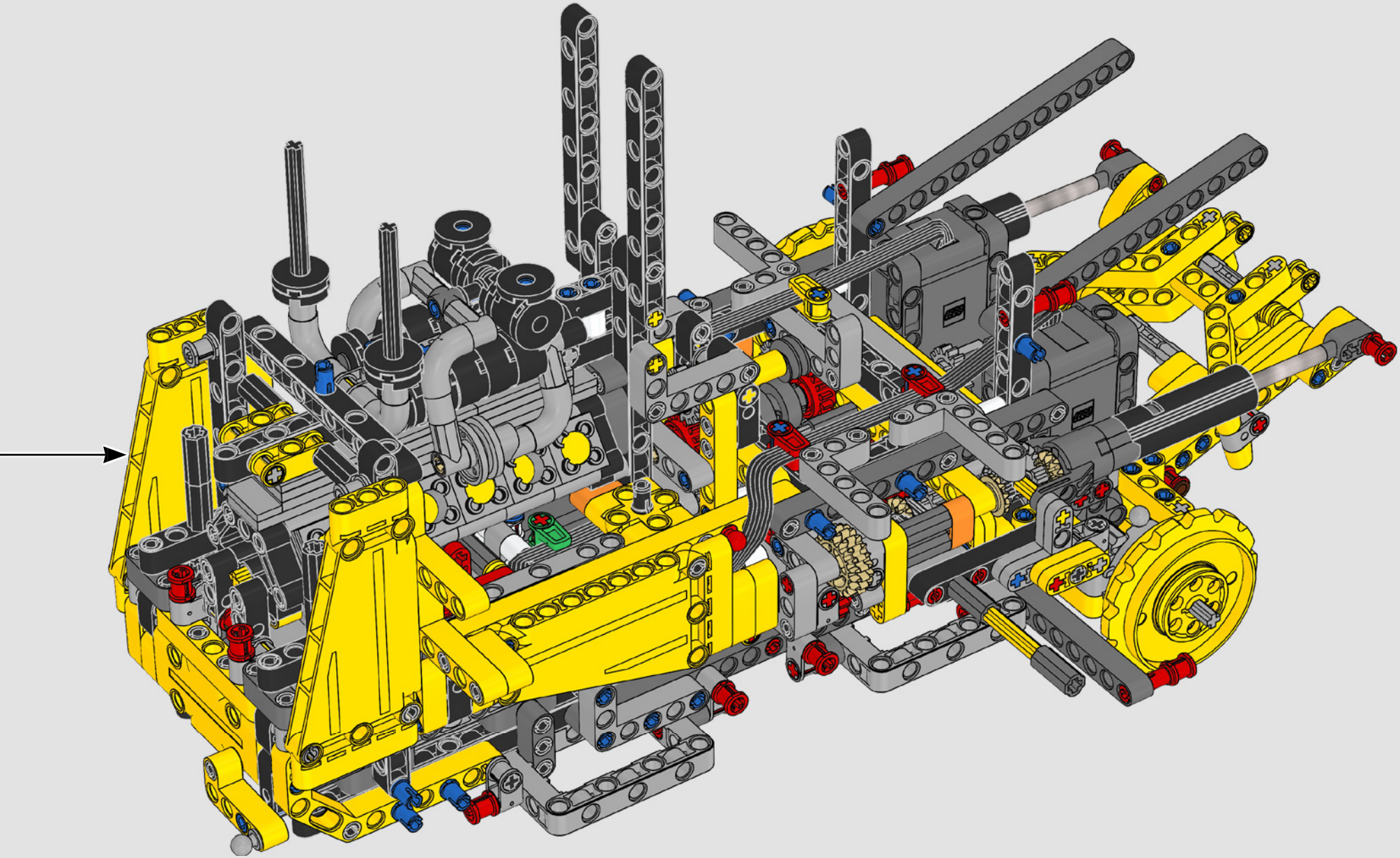

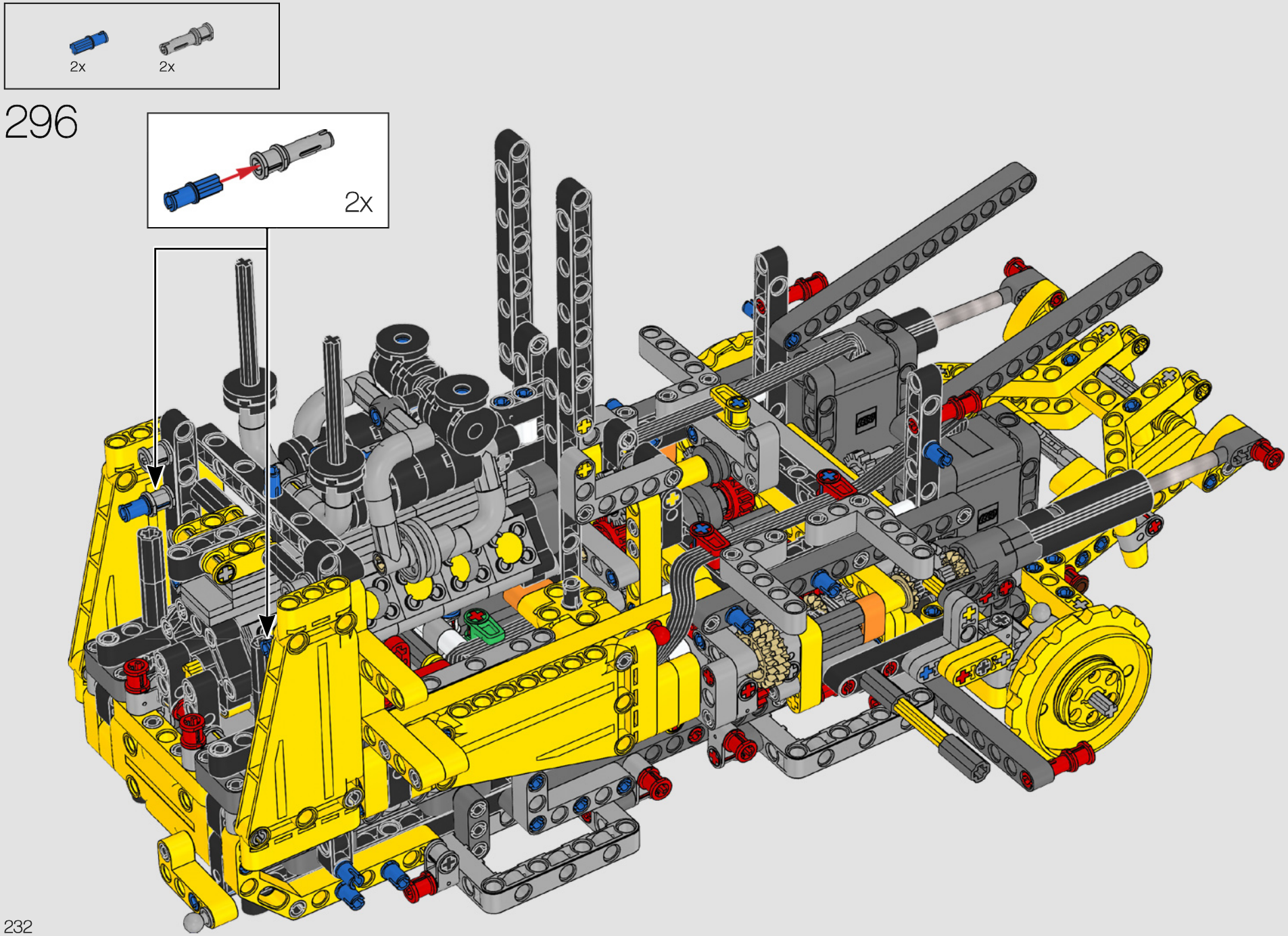
2x
2x
296
2x

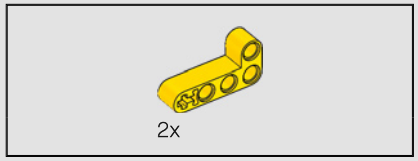

297

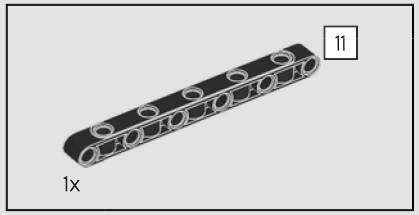

298

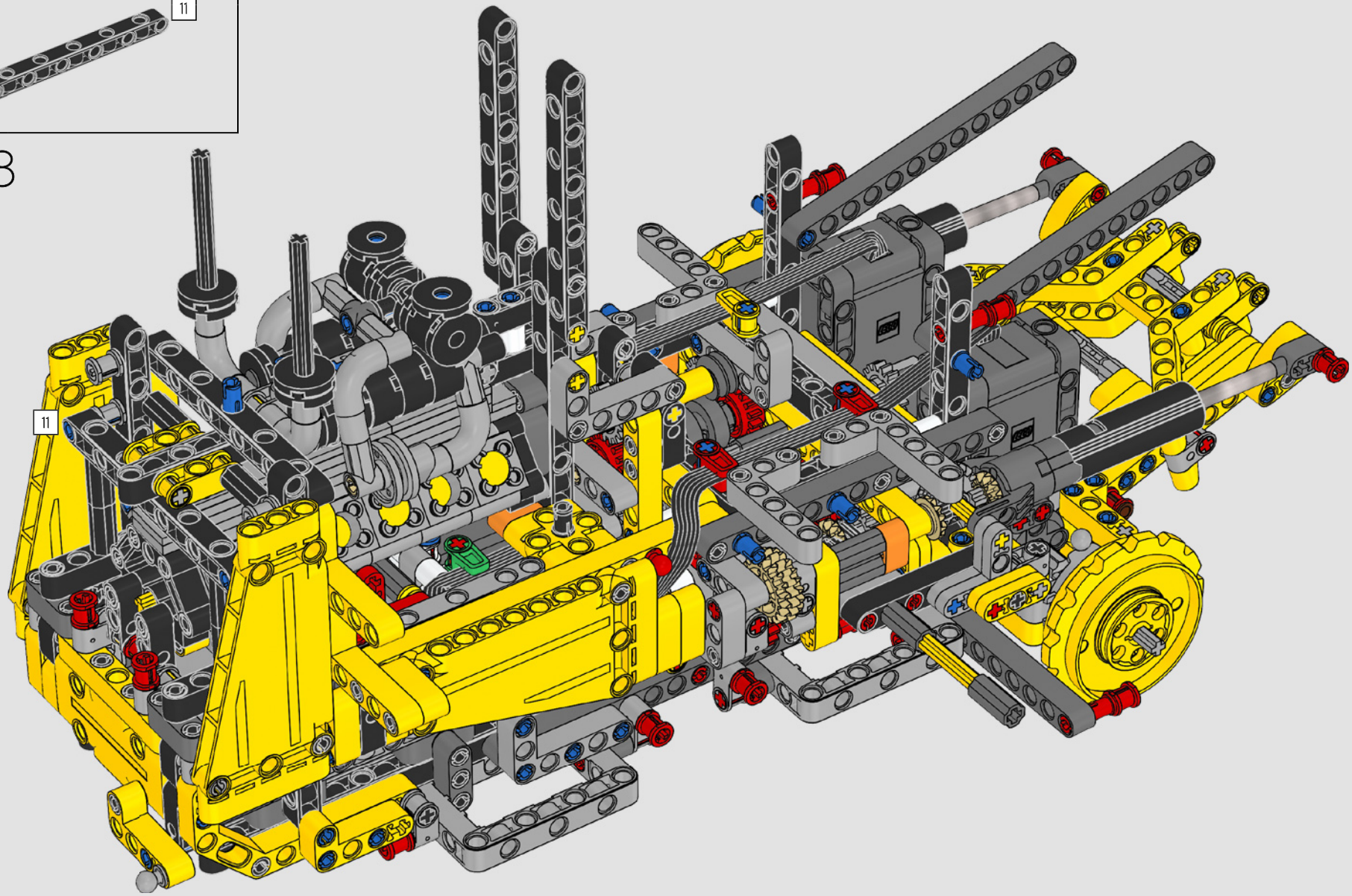

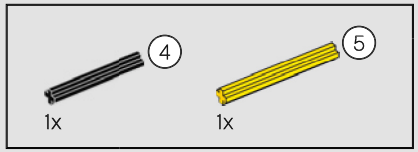

299

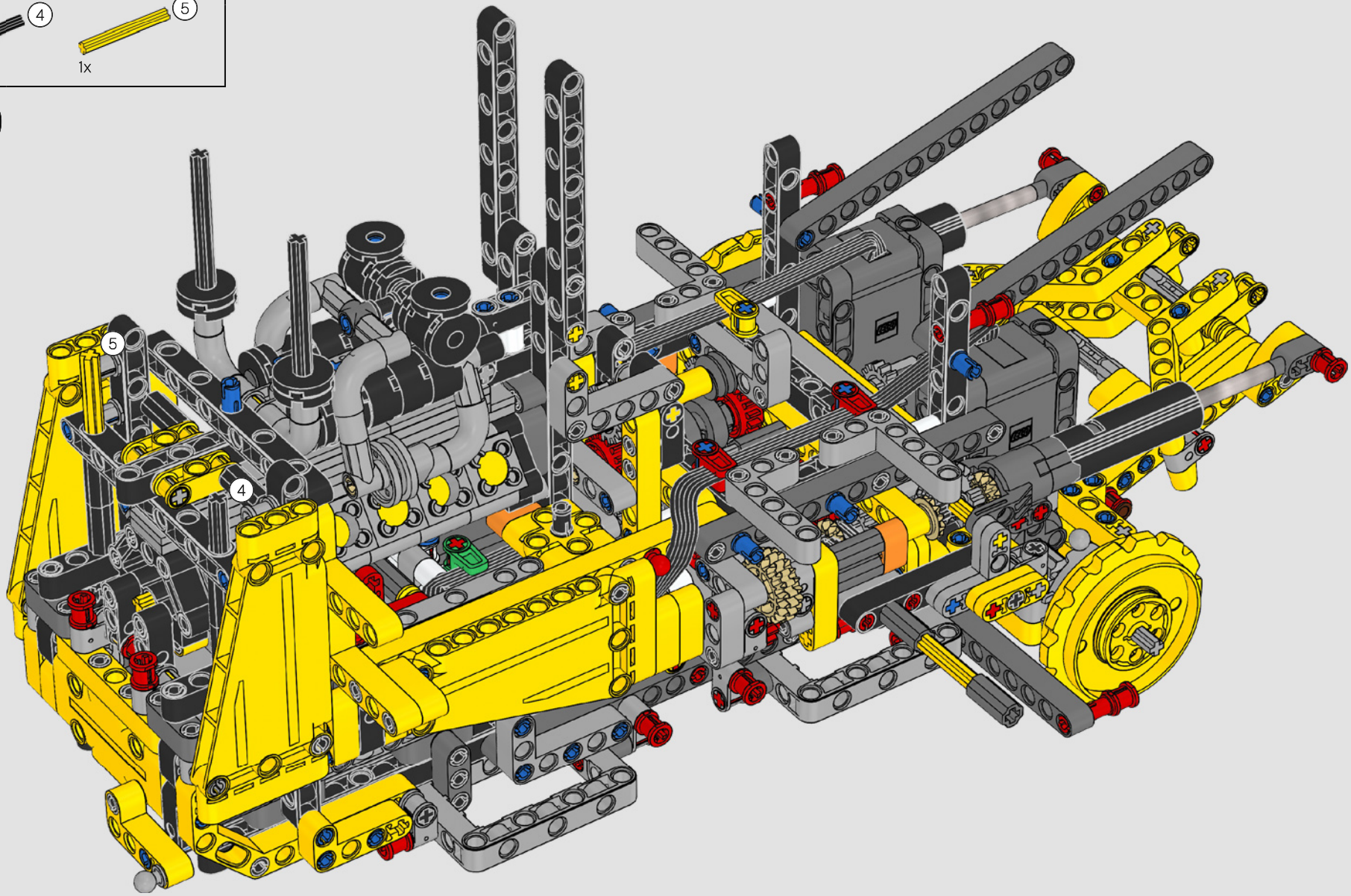

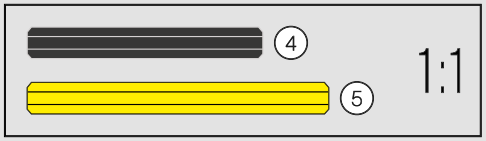

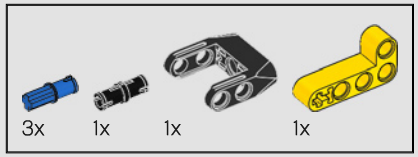

300

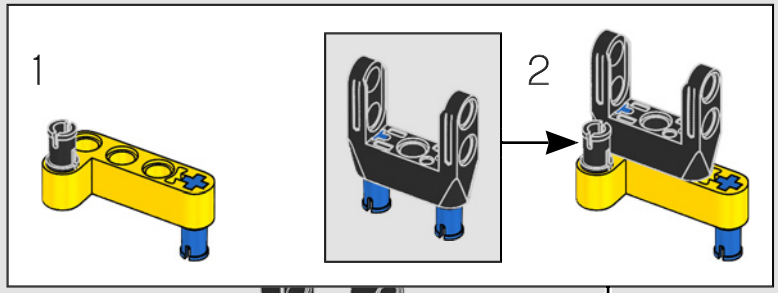

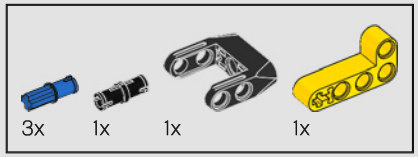

301

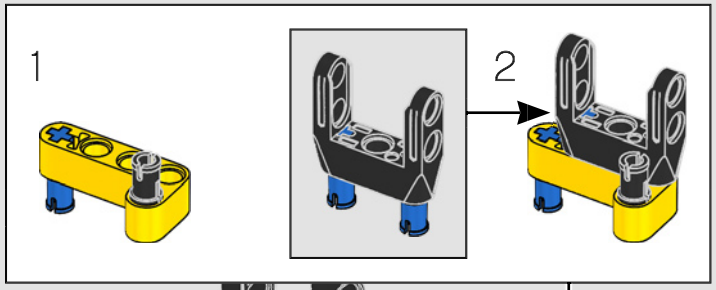

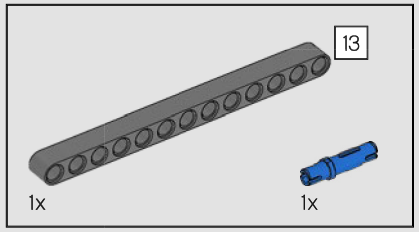

302

13

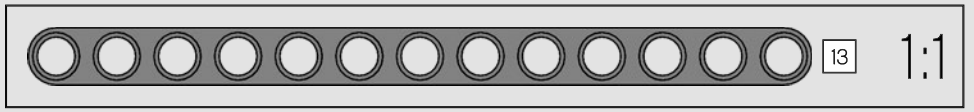

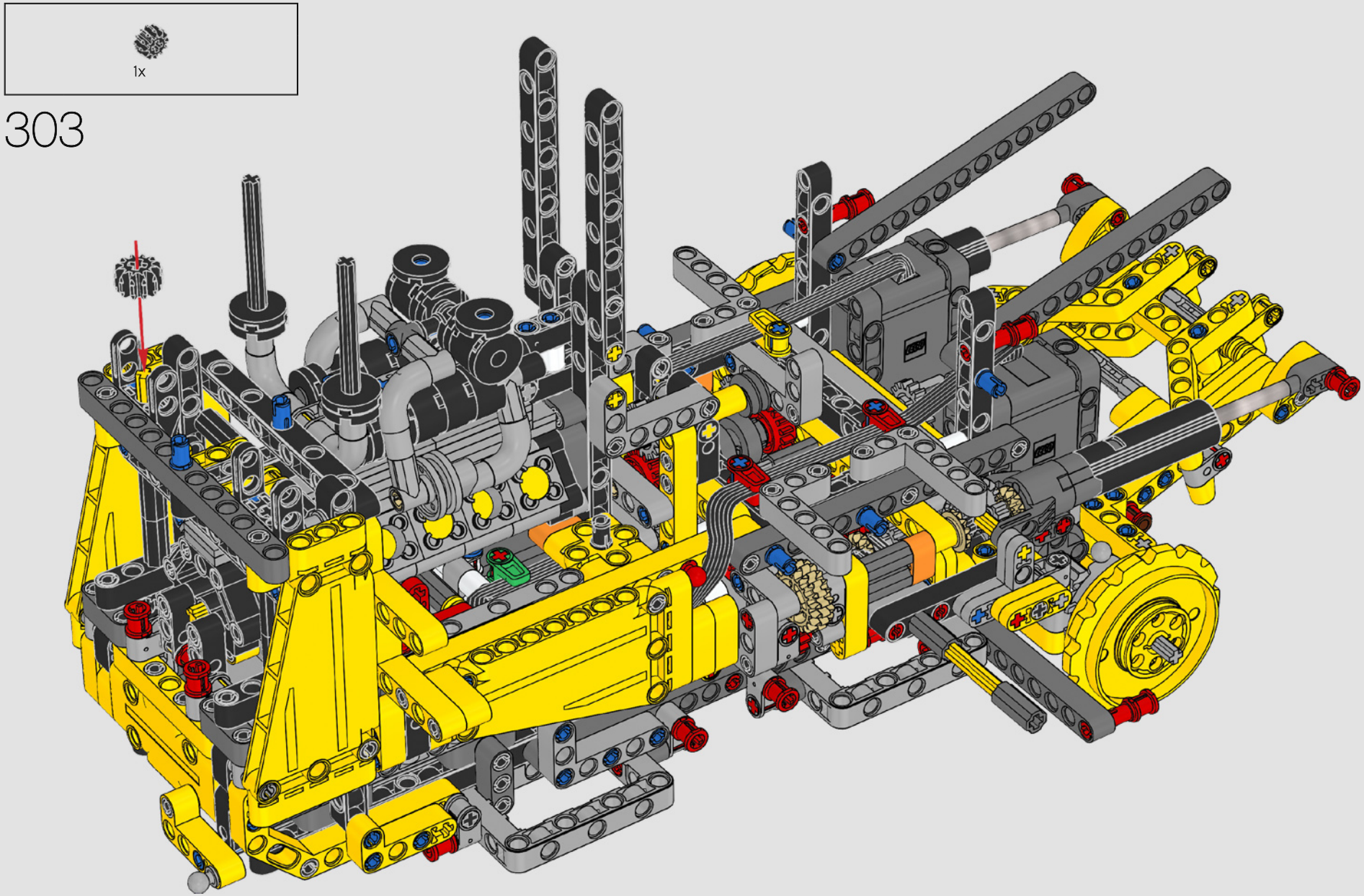
1x
303

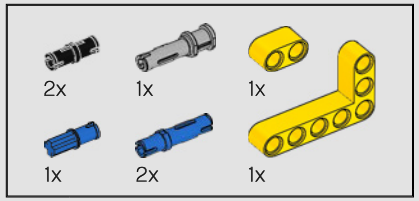

304

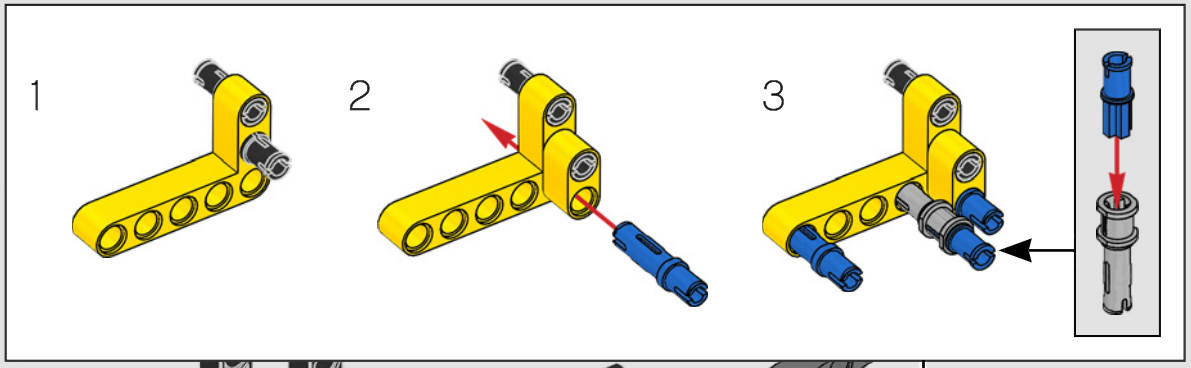

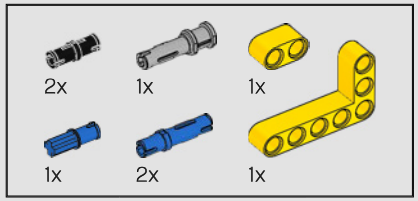

305

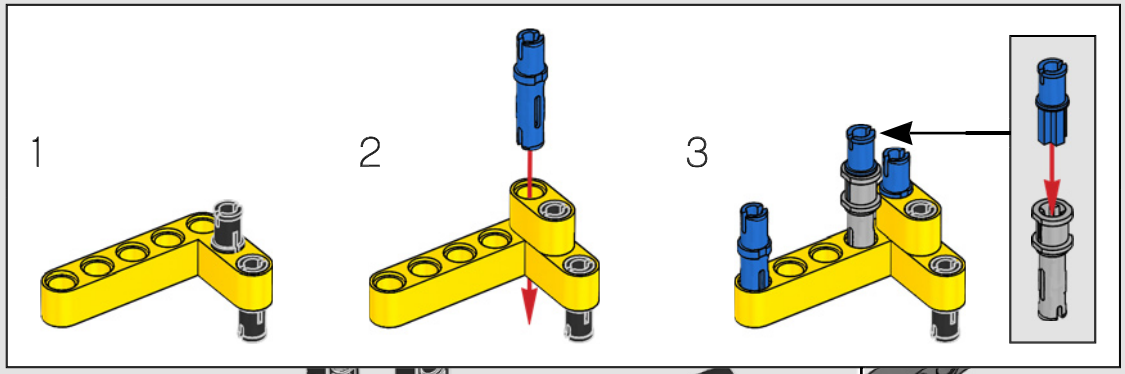

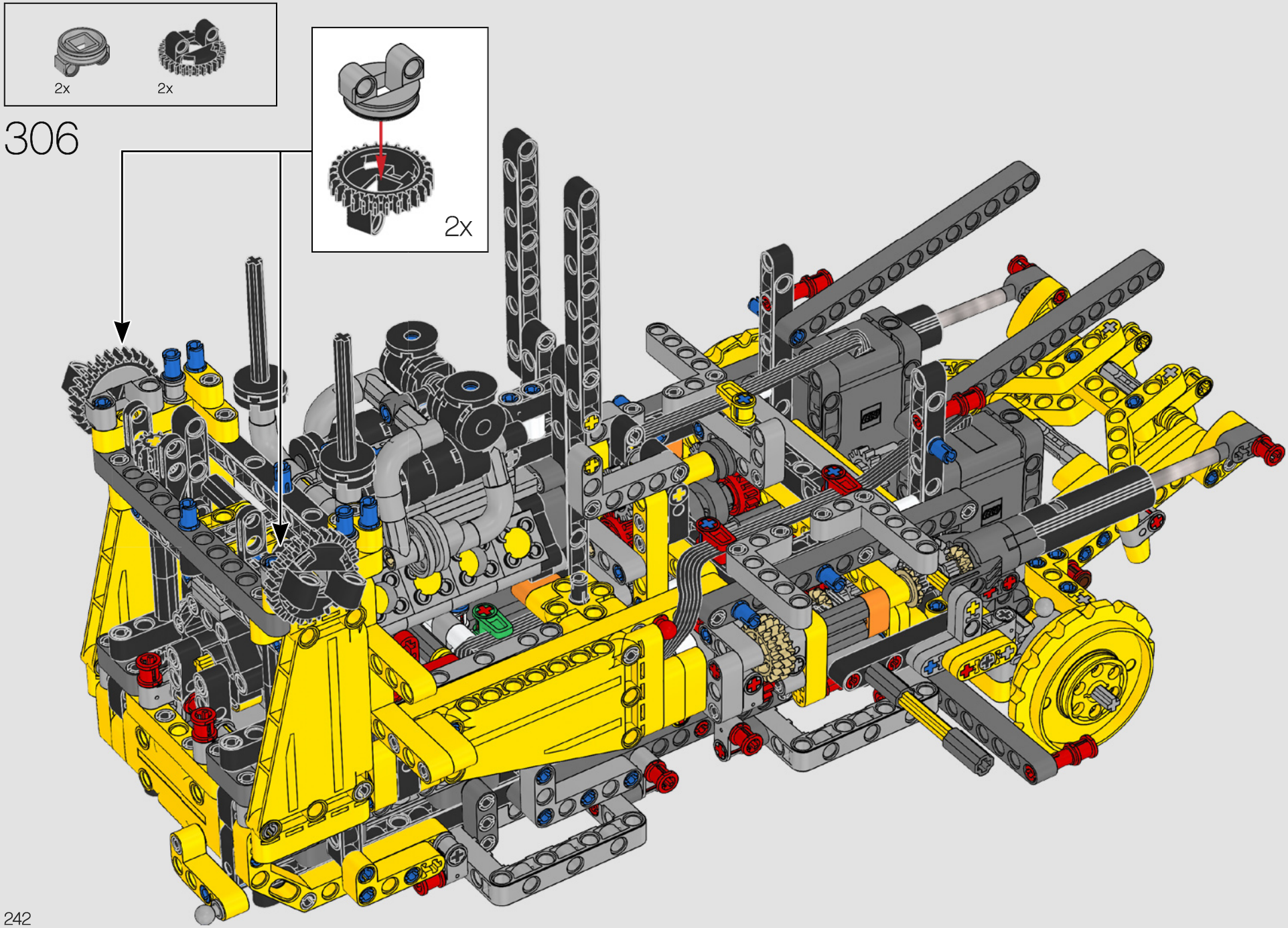
2x
2x
306
2x

307

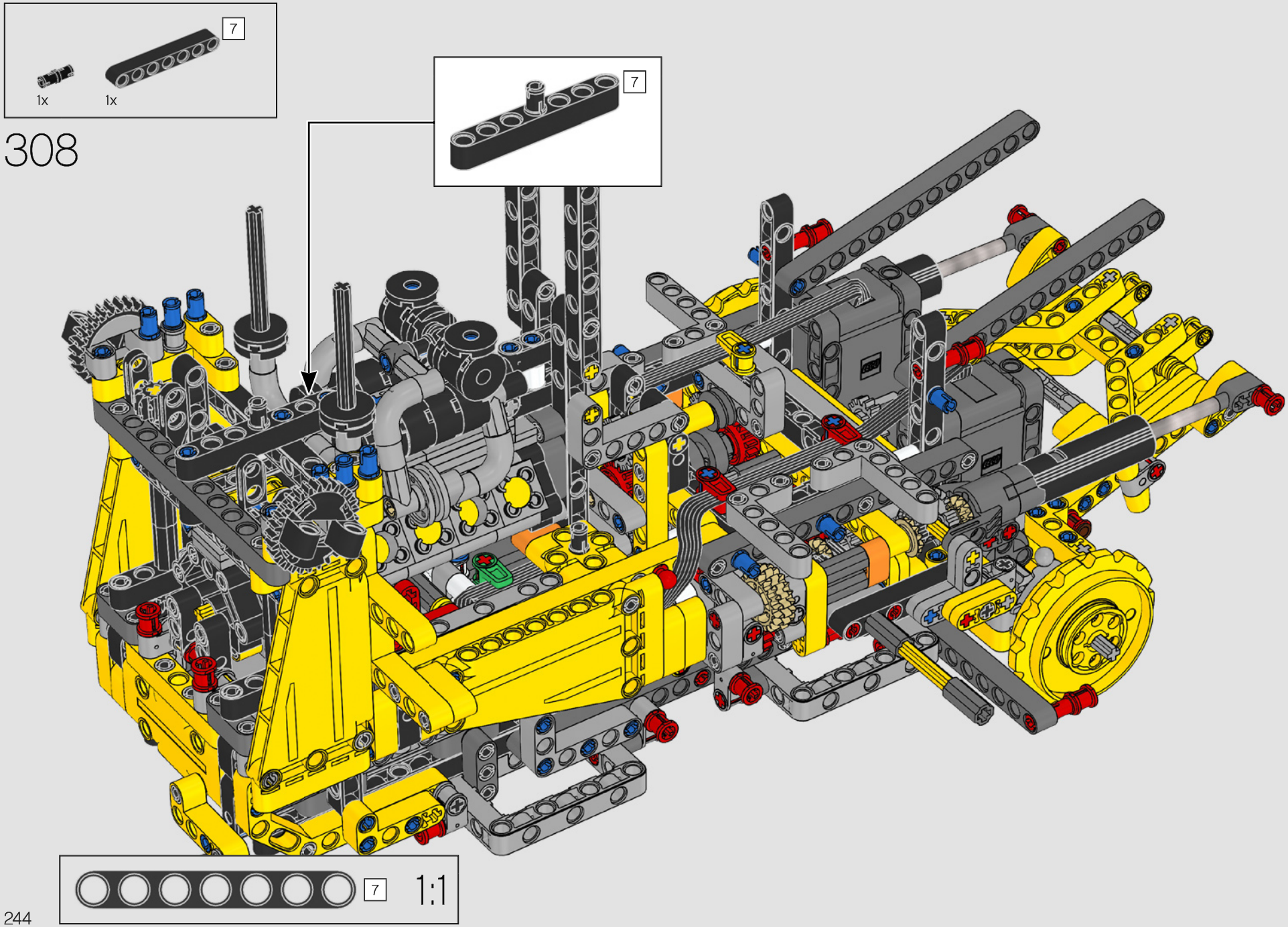
7
1x
1x
308
7
7
1:1

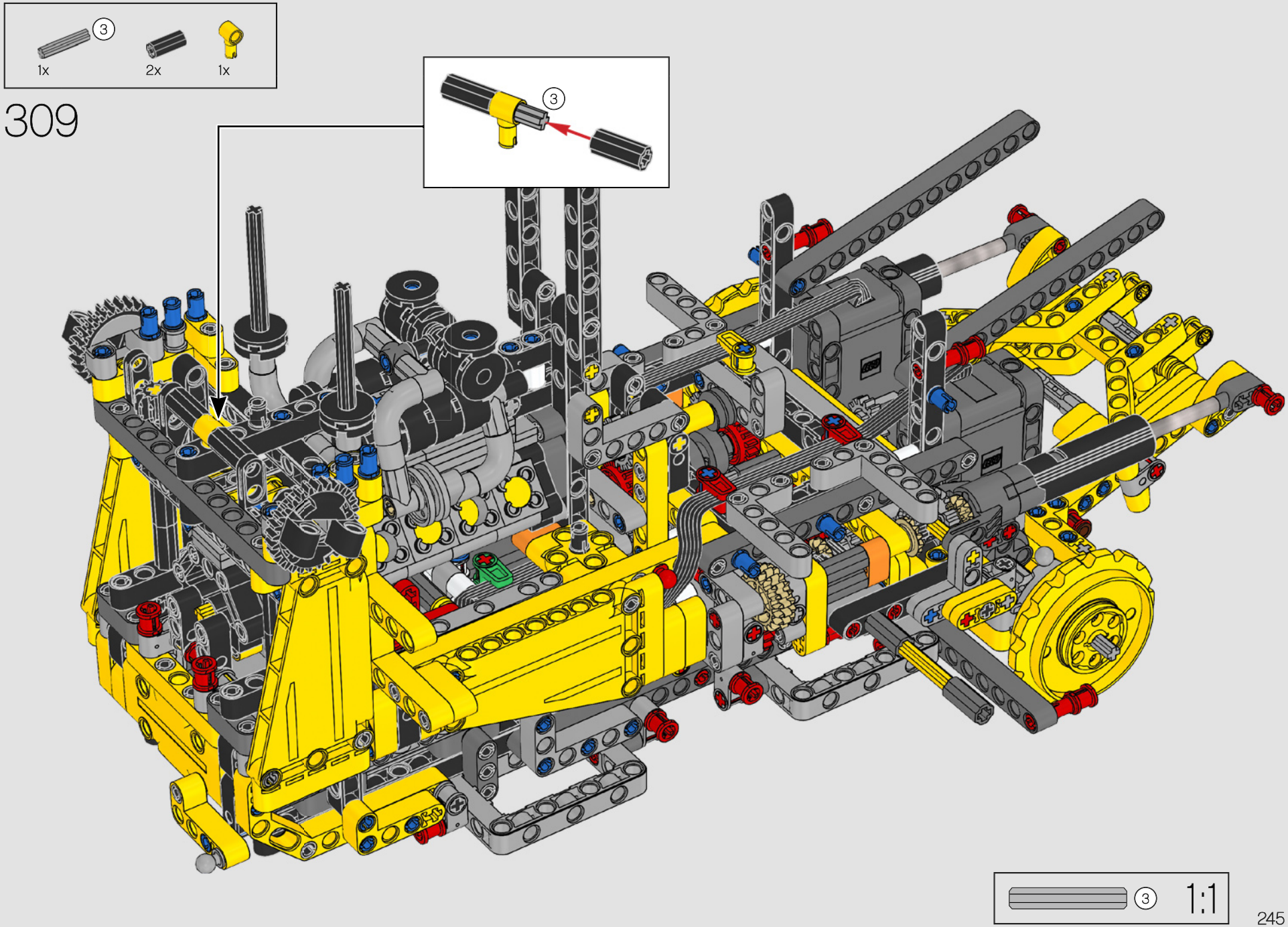
3
1x
2x
1x
309
3
3
1:1

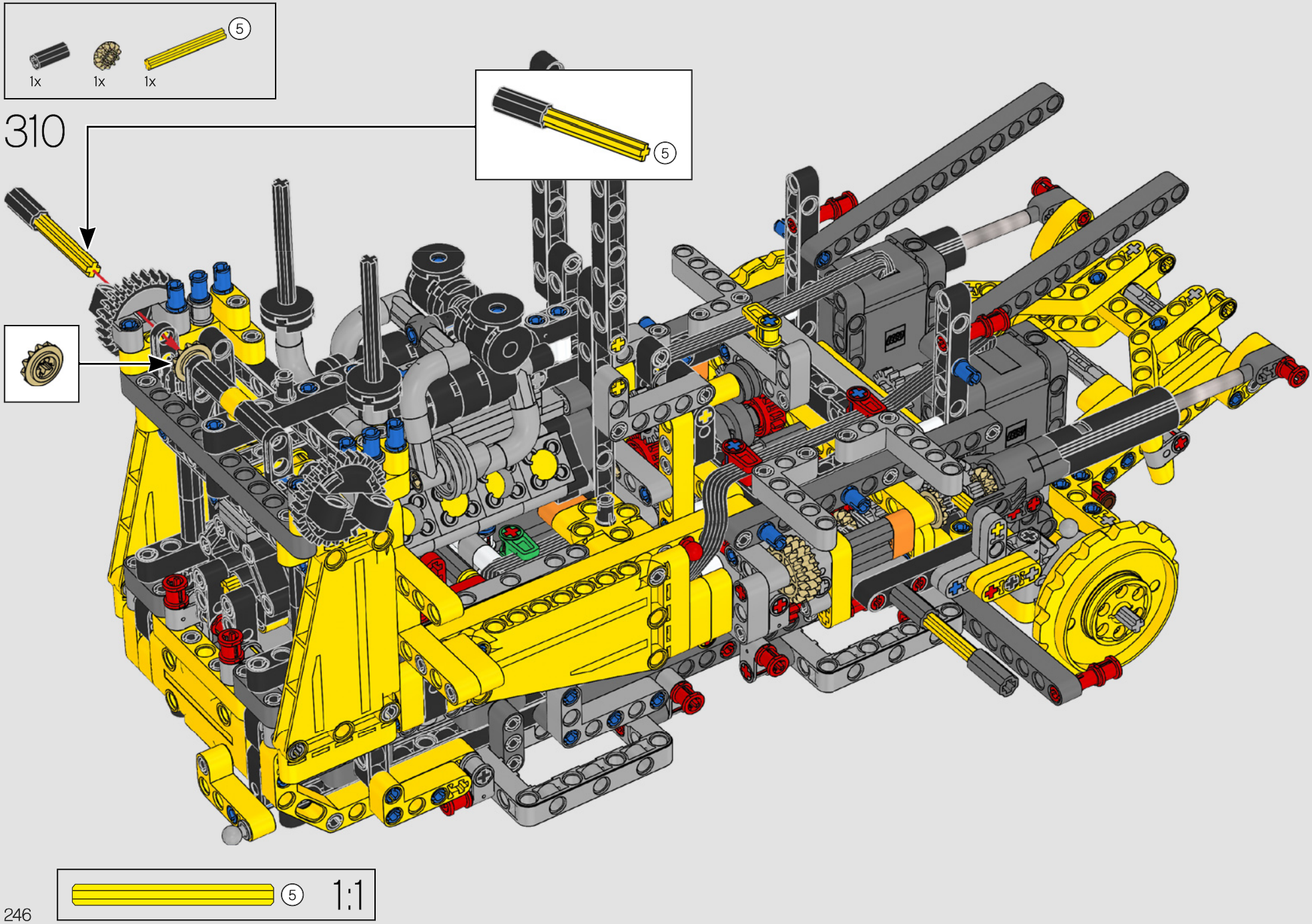
5
1x
1x
1x
310
5
5
1:1

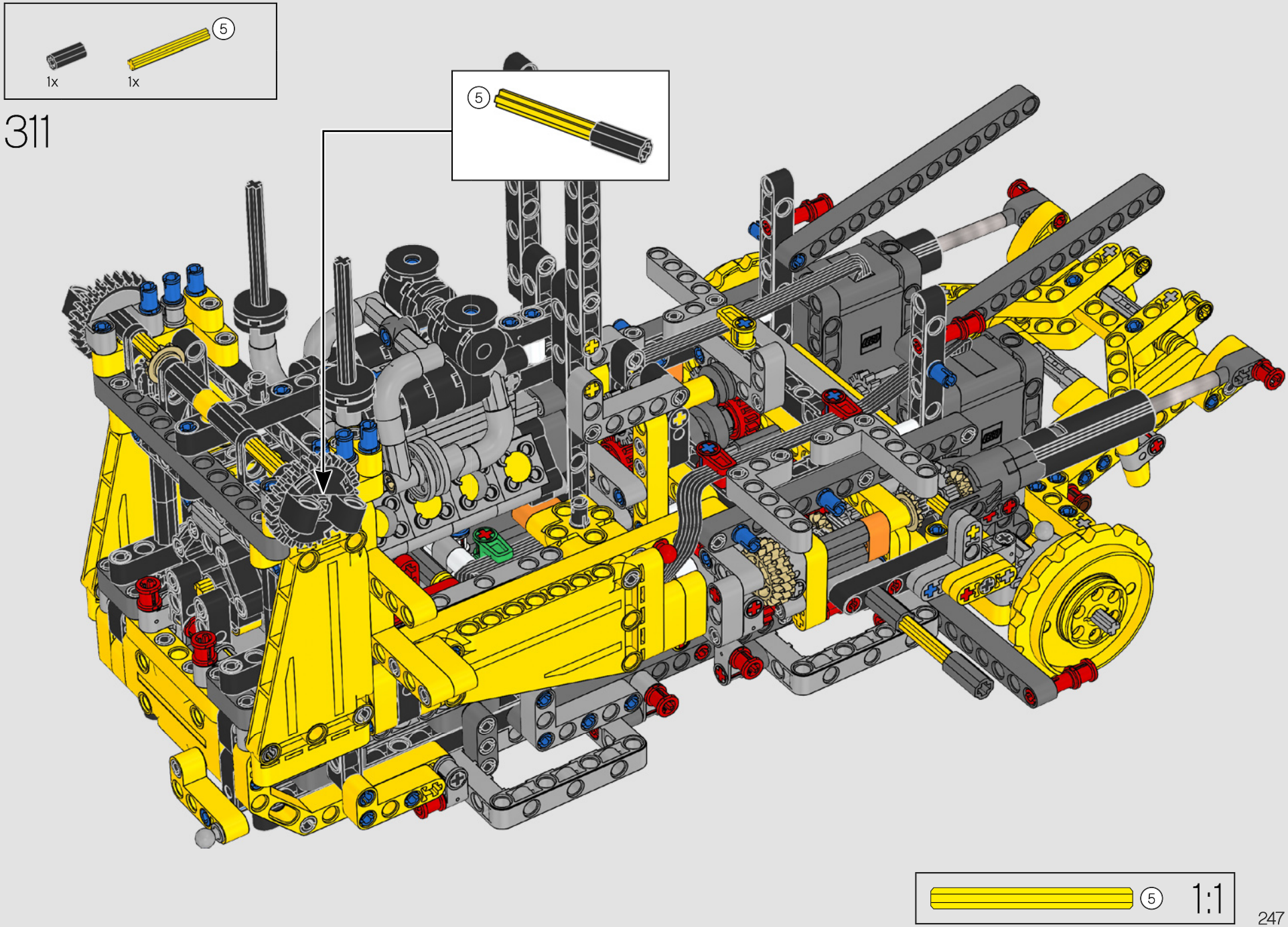
5
1x
1x
311
5
5
1:1

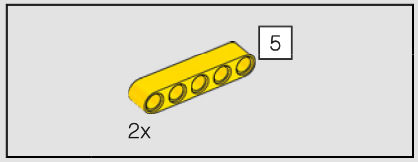

312

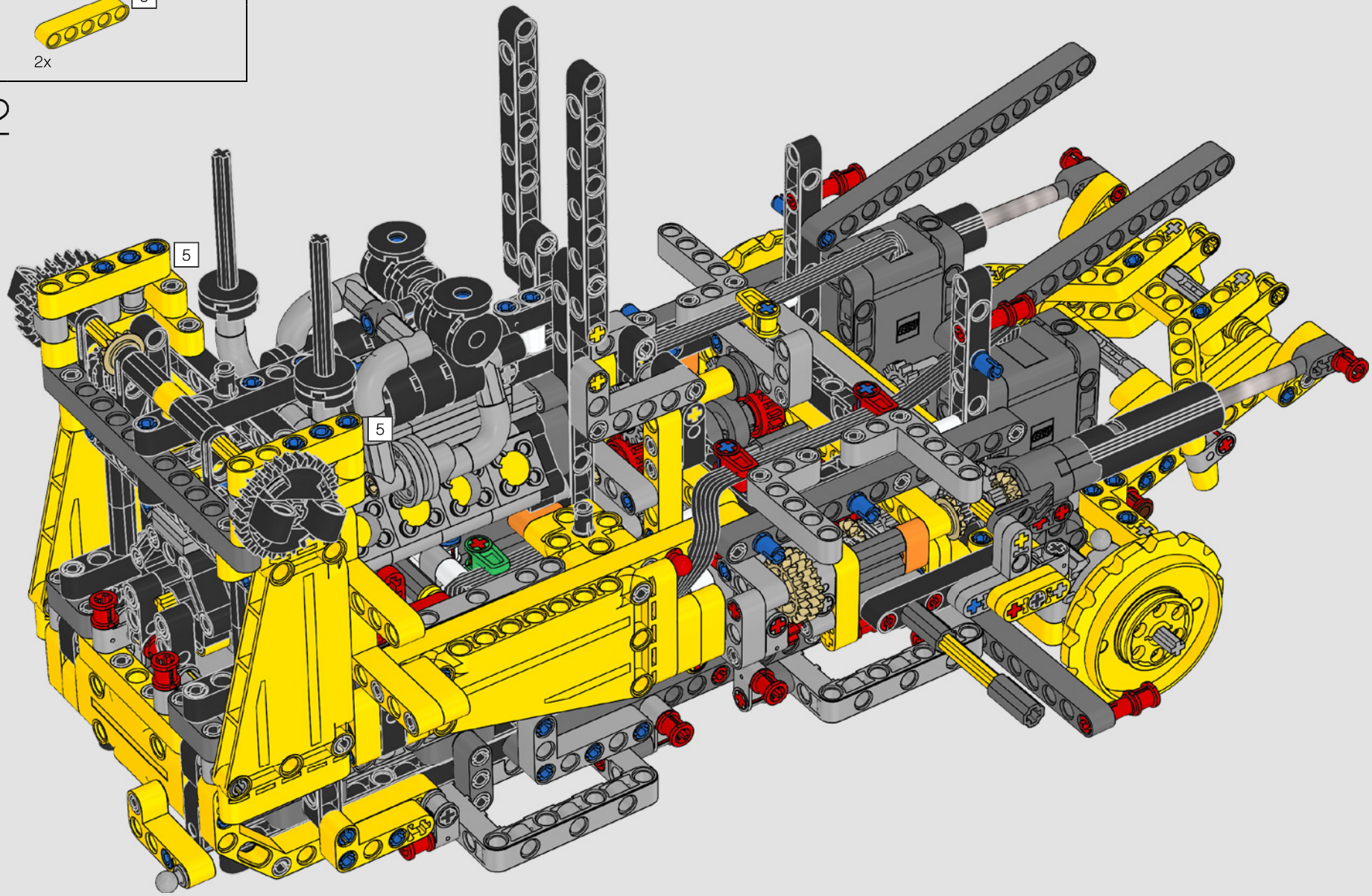

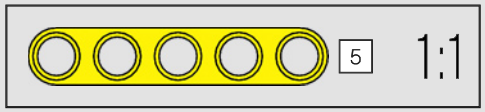

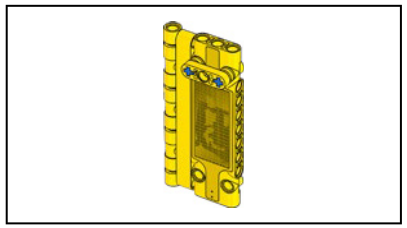

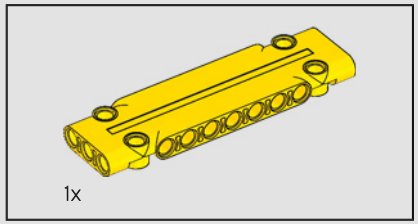

313

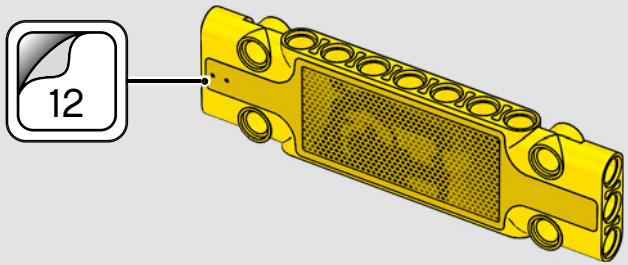

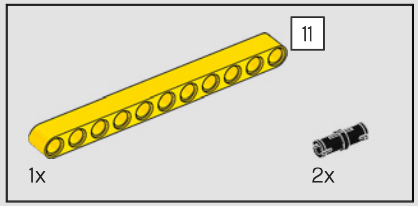

314

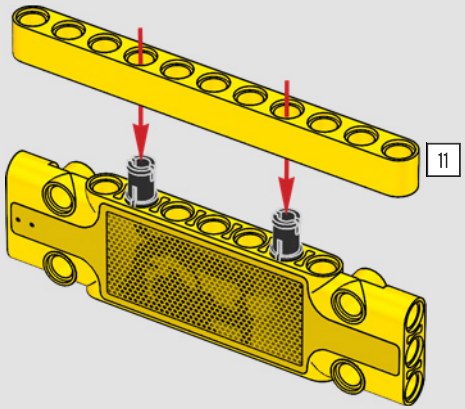

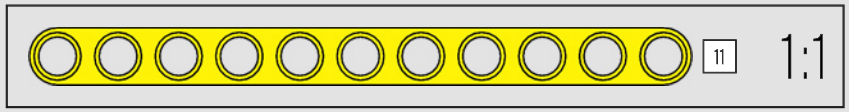

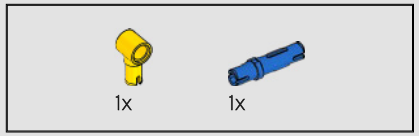

315

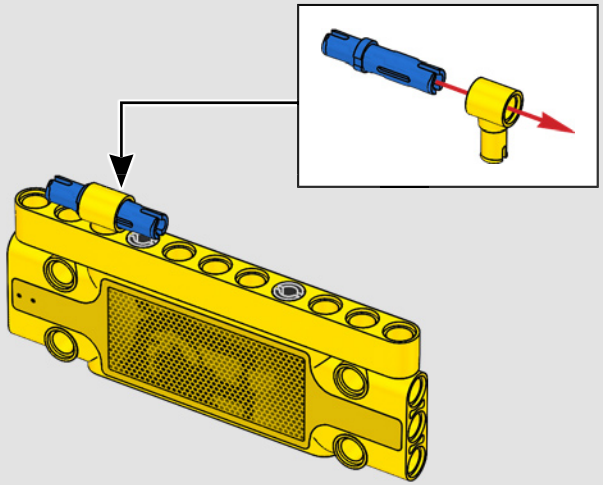

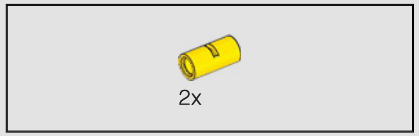

316

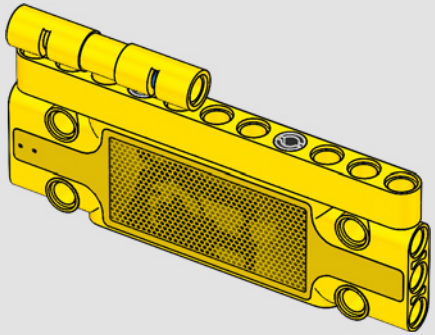

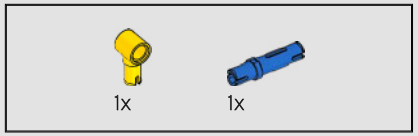

317

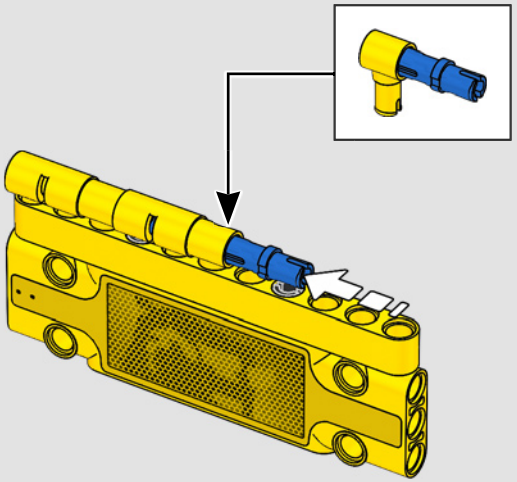

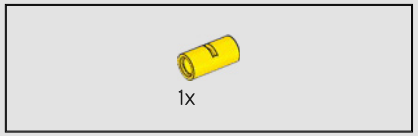

318

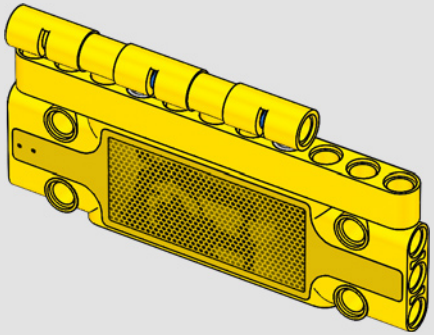

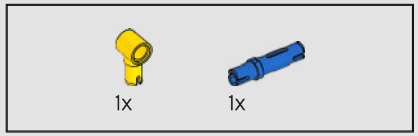

319

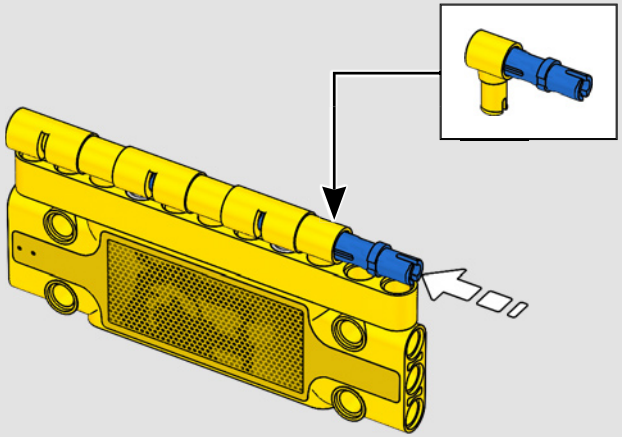

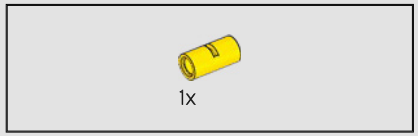

320

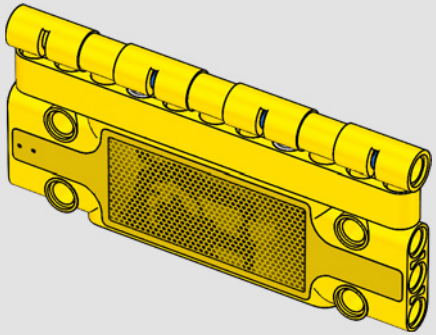

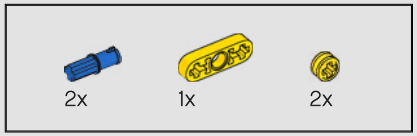

321

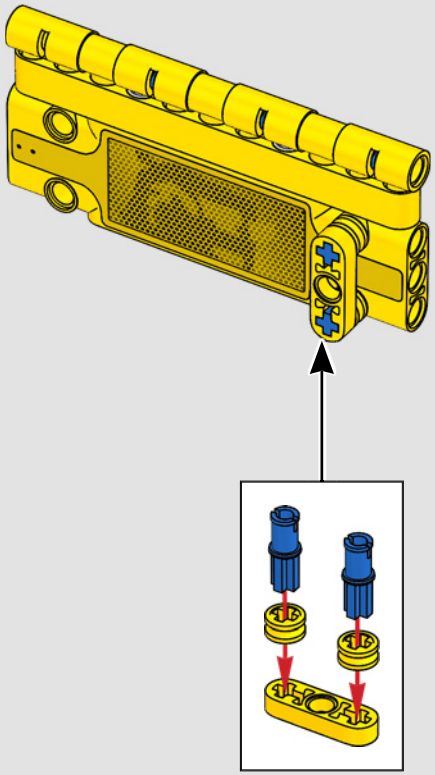

322

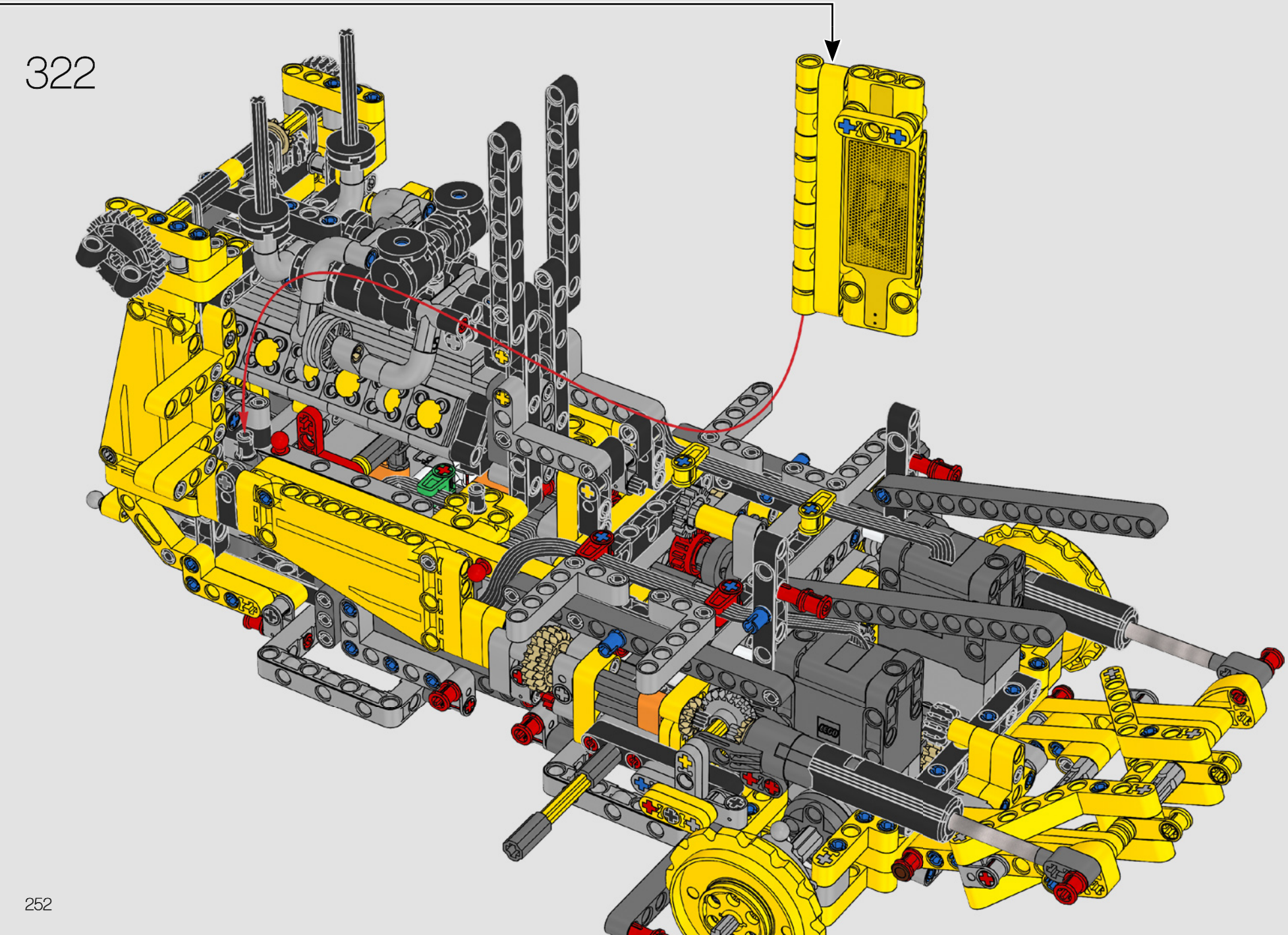

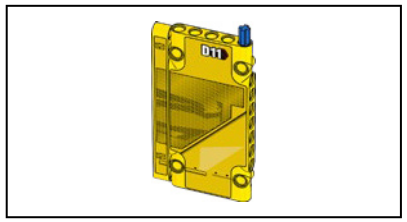

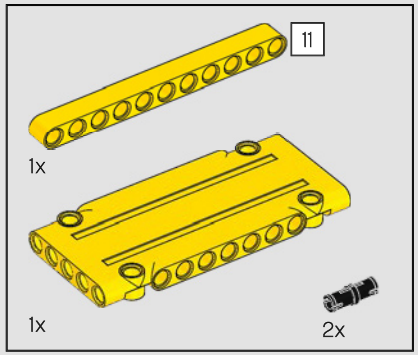

323

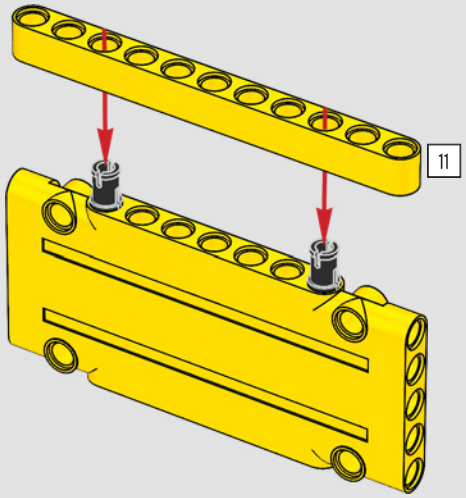

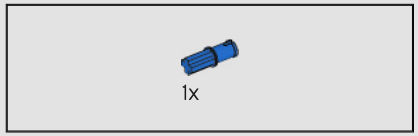

324

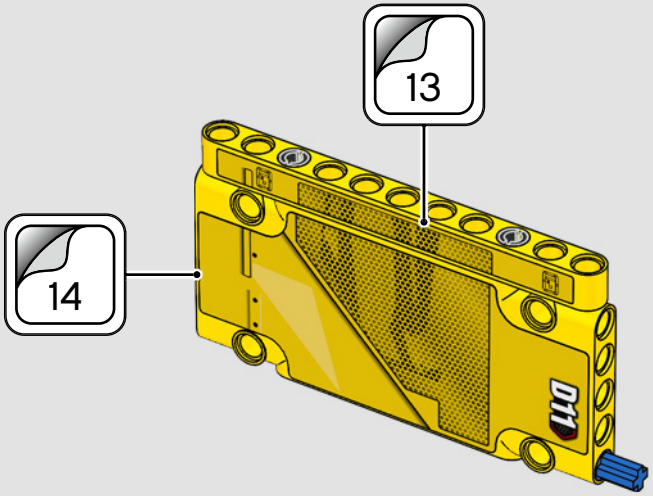

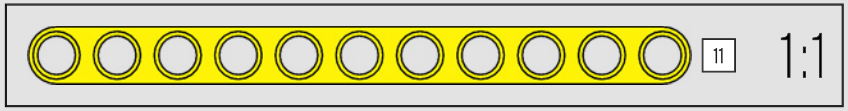

325

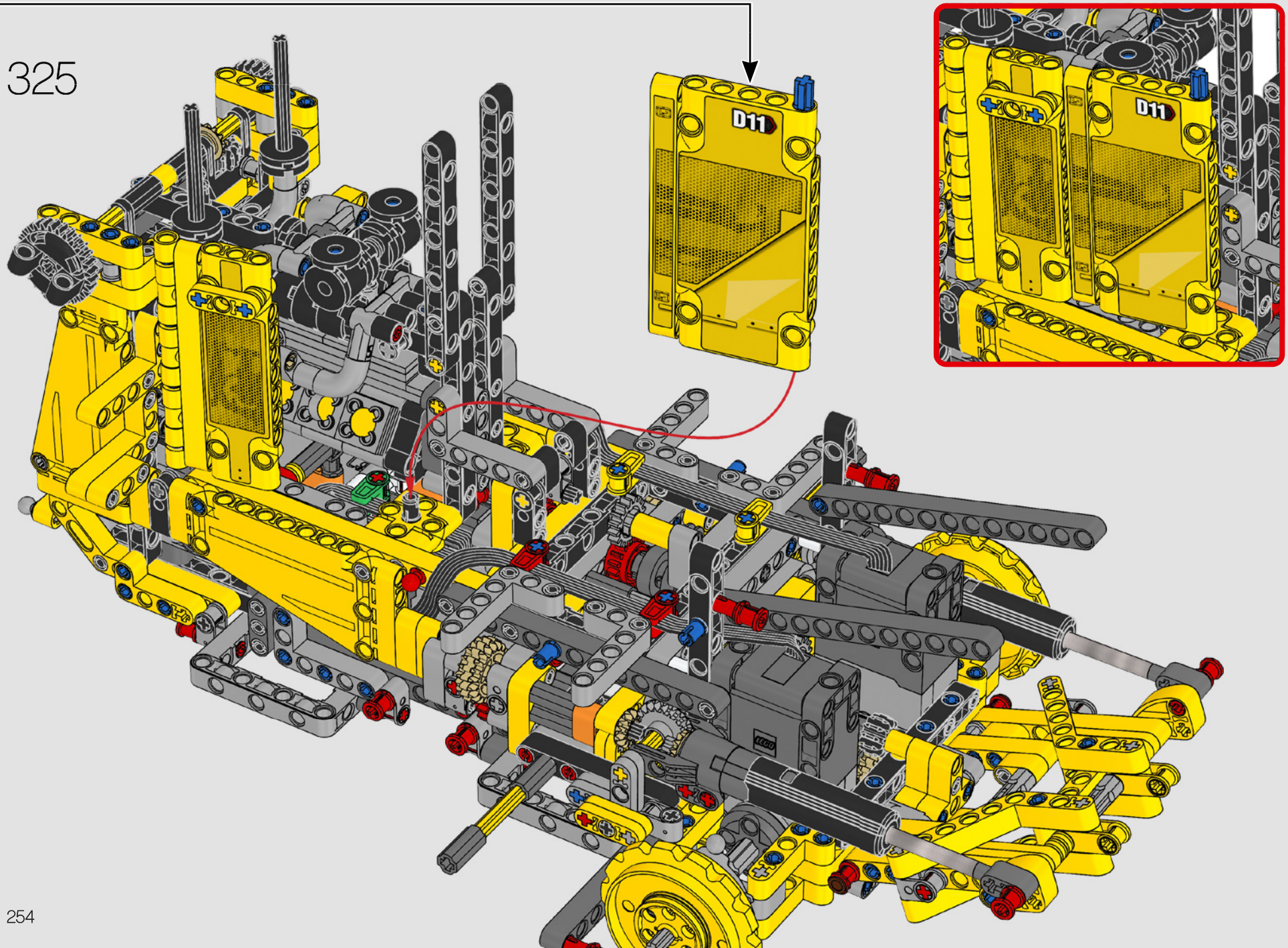

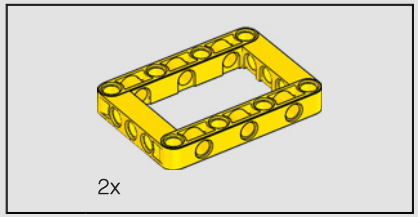

326

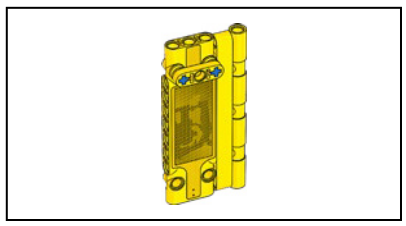

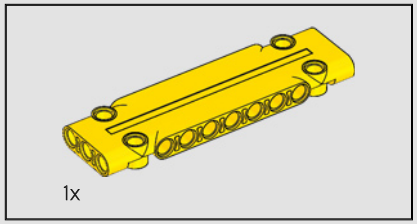

327

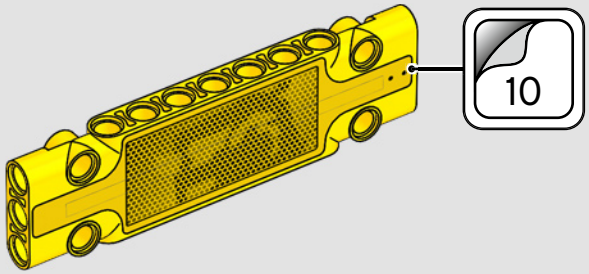

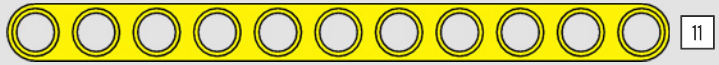

1:1

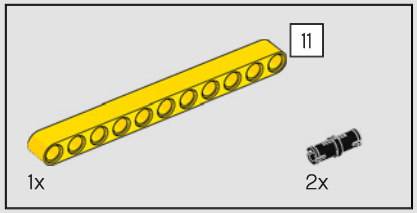

328

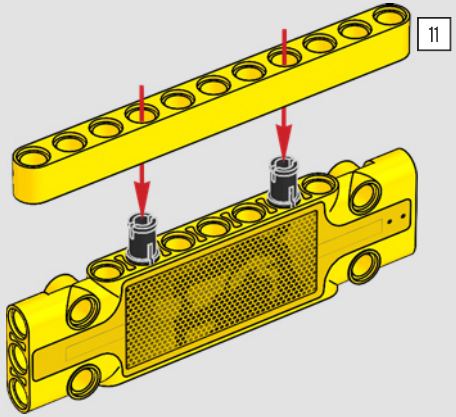

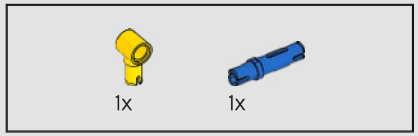

329

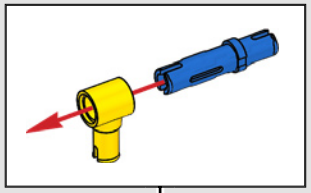

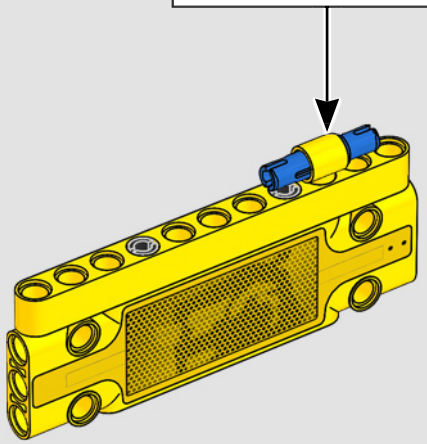

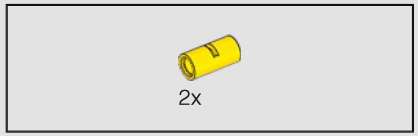

330

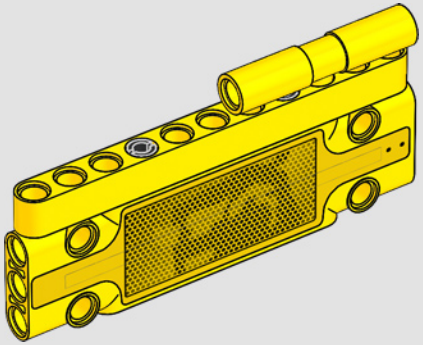

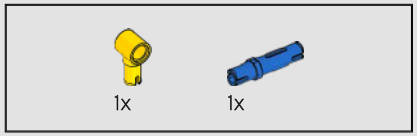

331

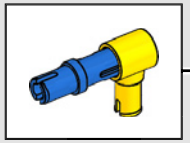

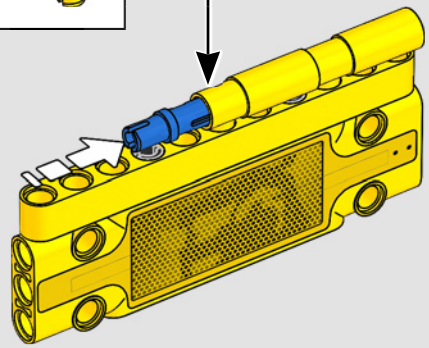

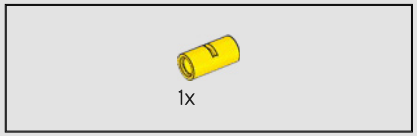

332

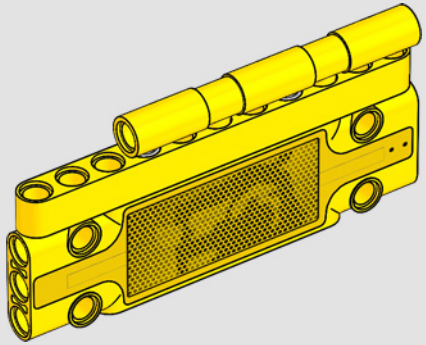

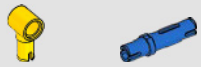

333

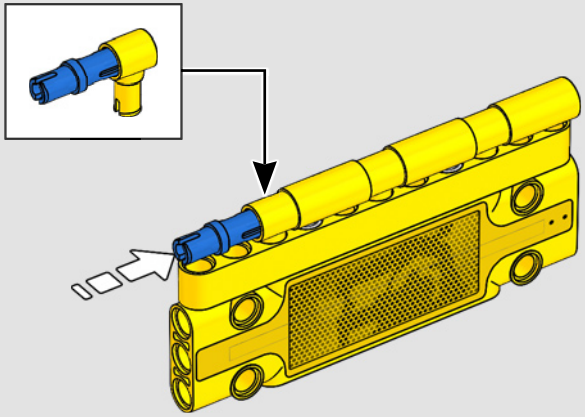

334

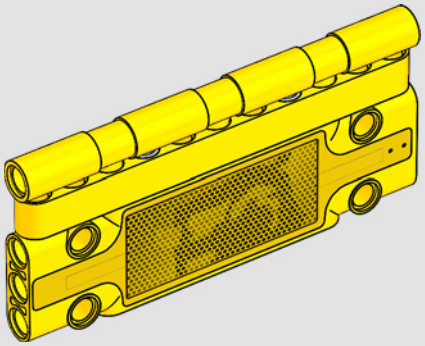

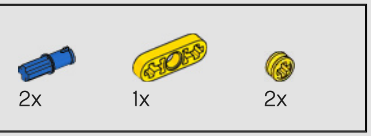

335

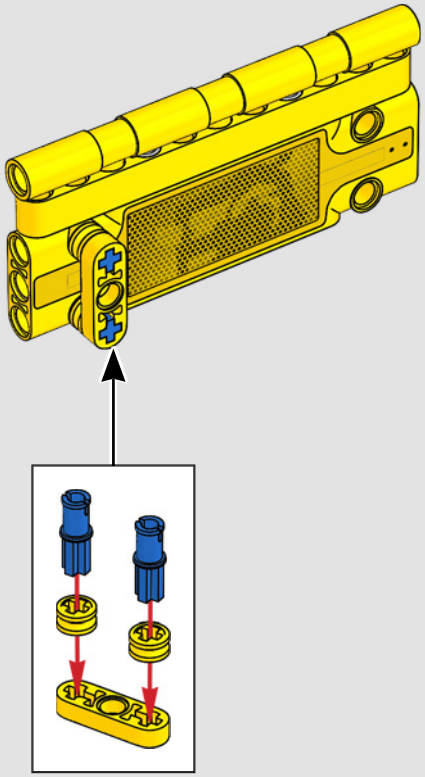

336

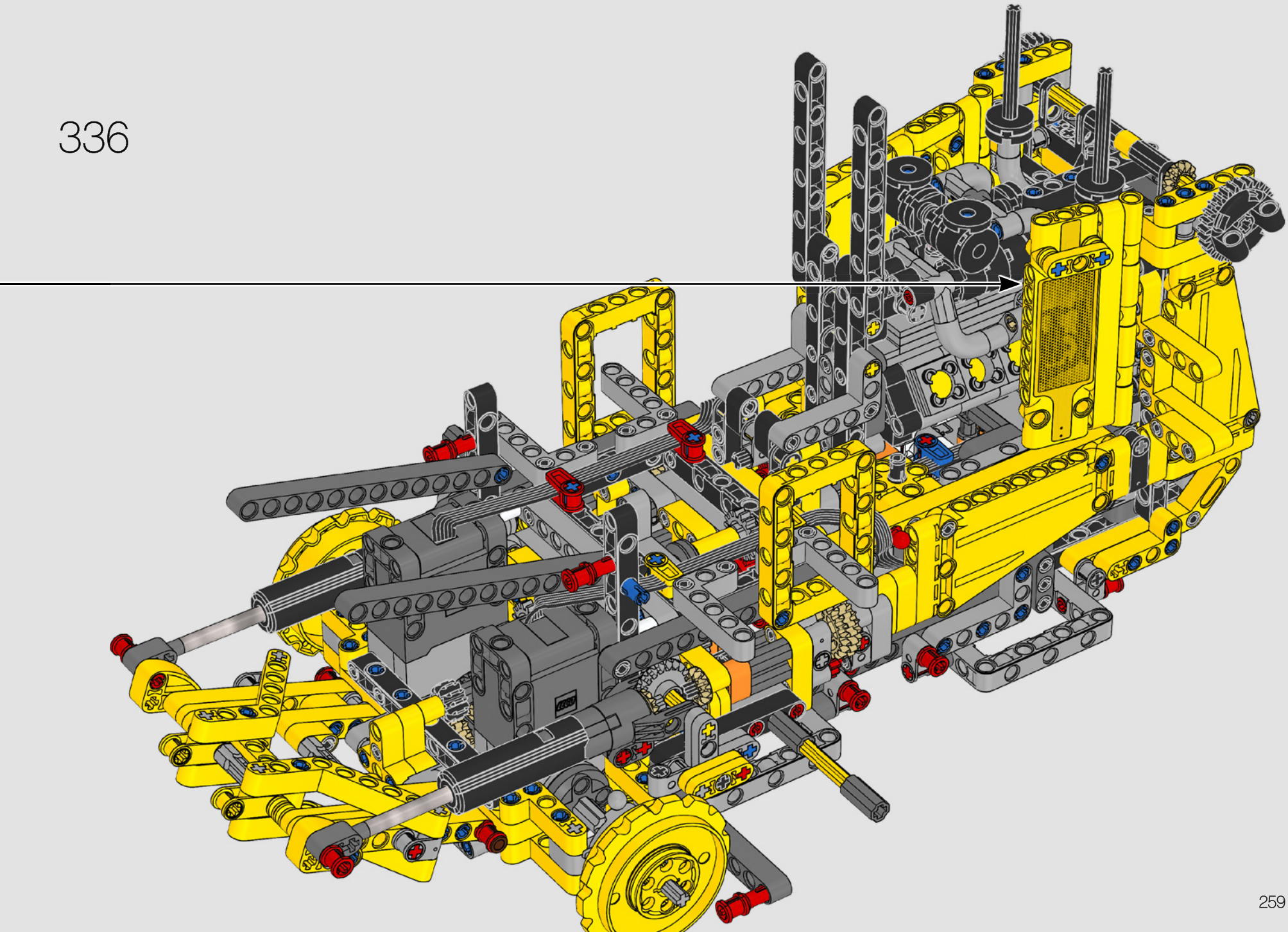

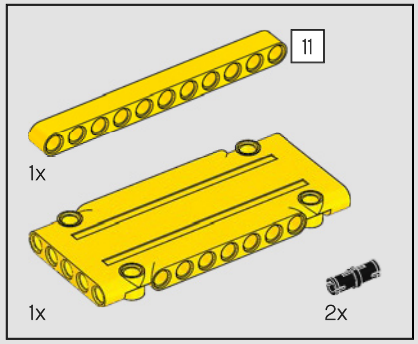

337

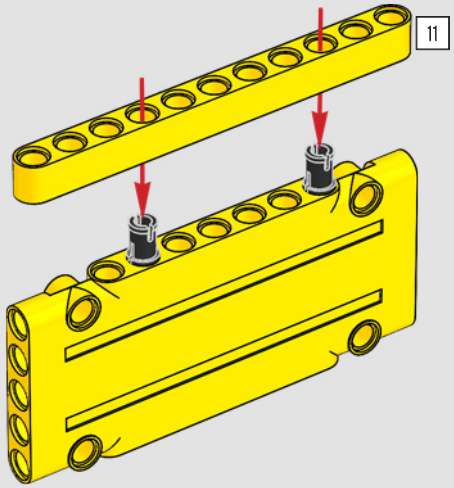

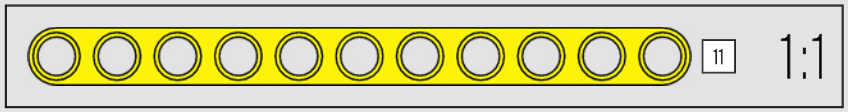

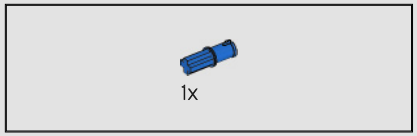

338

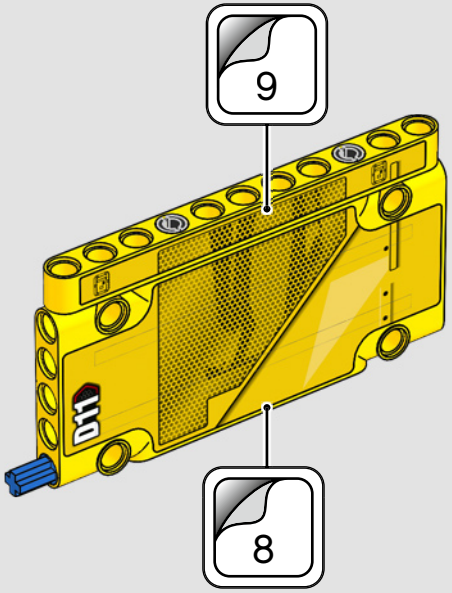

339

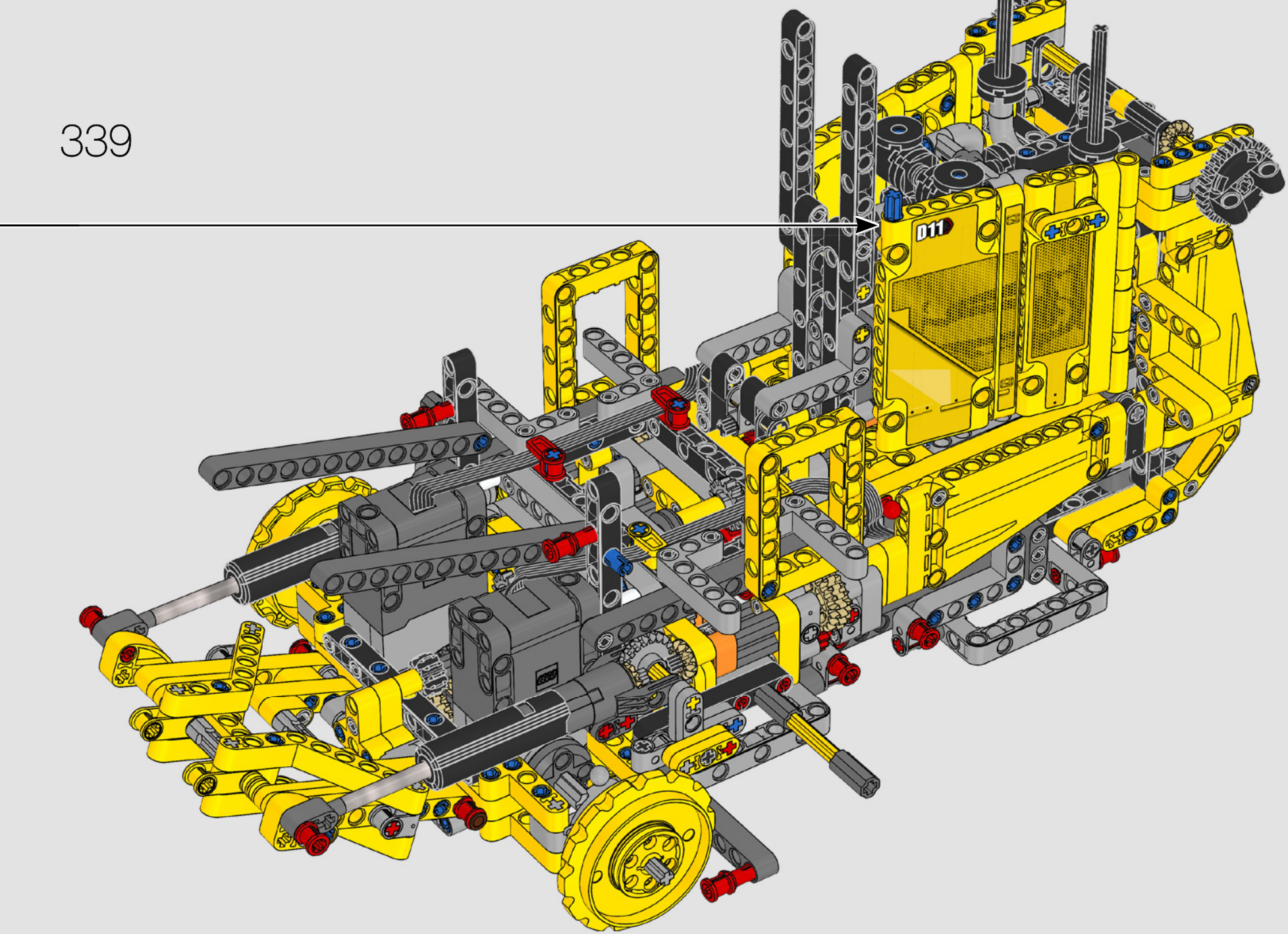

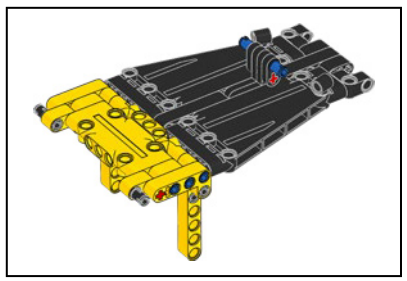

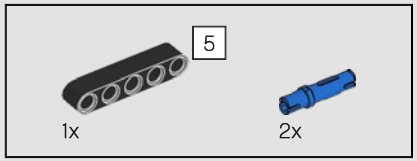

340

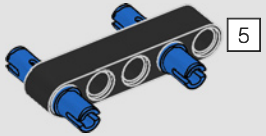

341

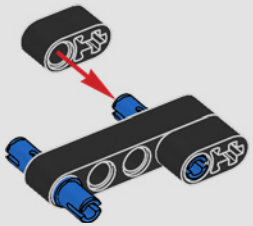

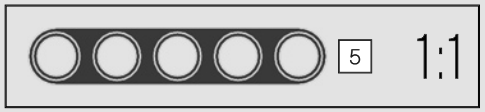

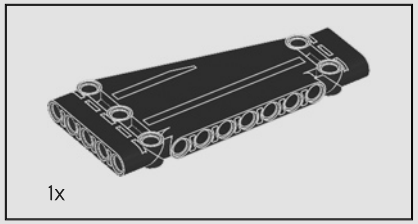

342

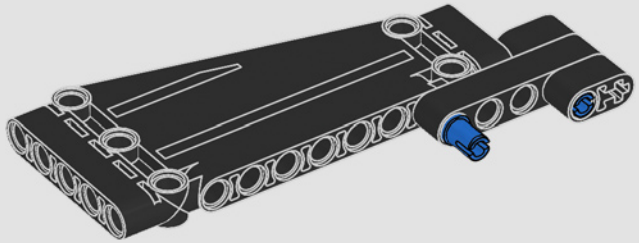

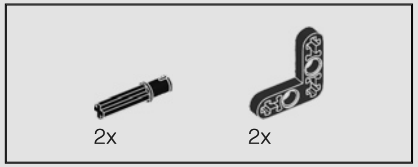

343

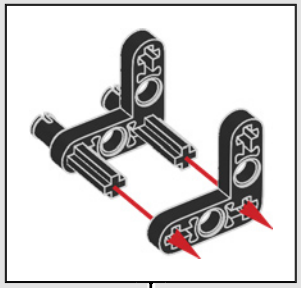

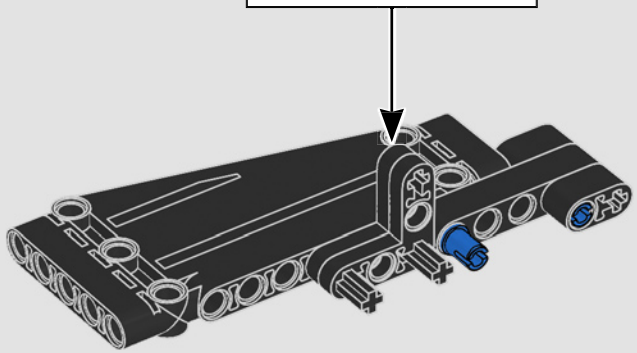

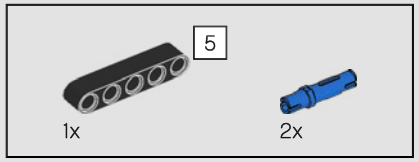

344

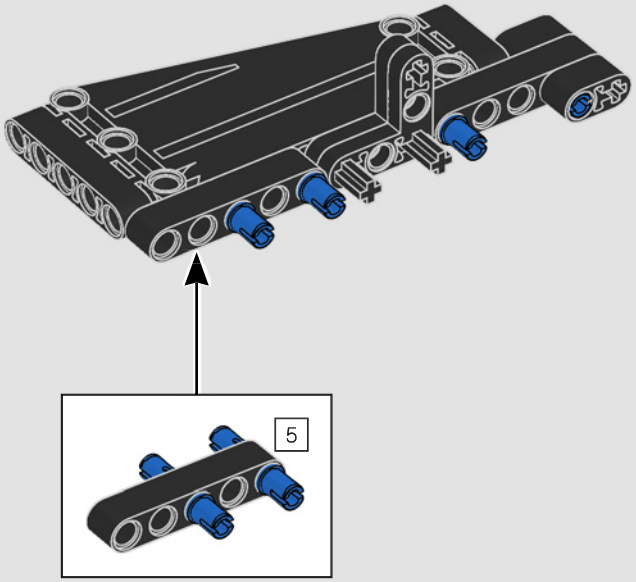

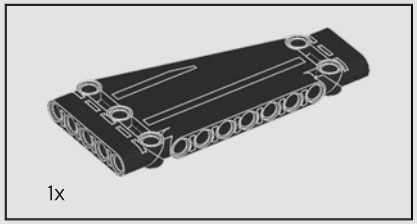

345

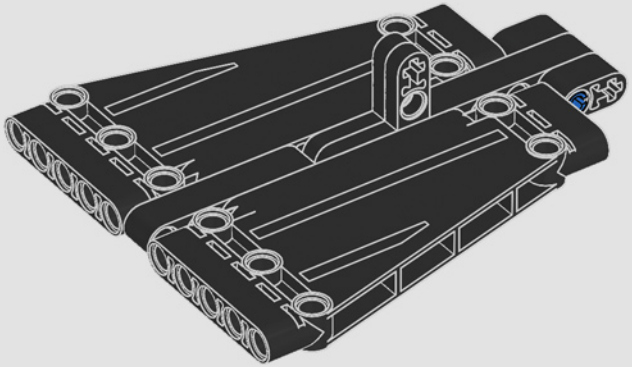

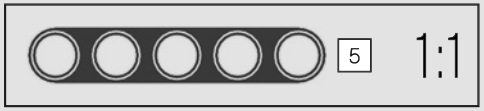

346

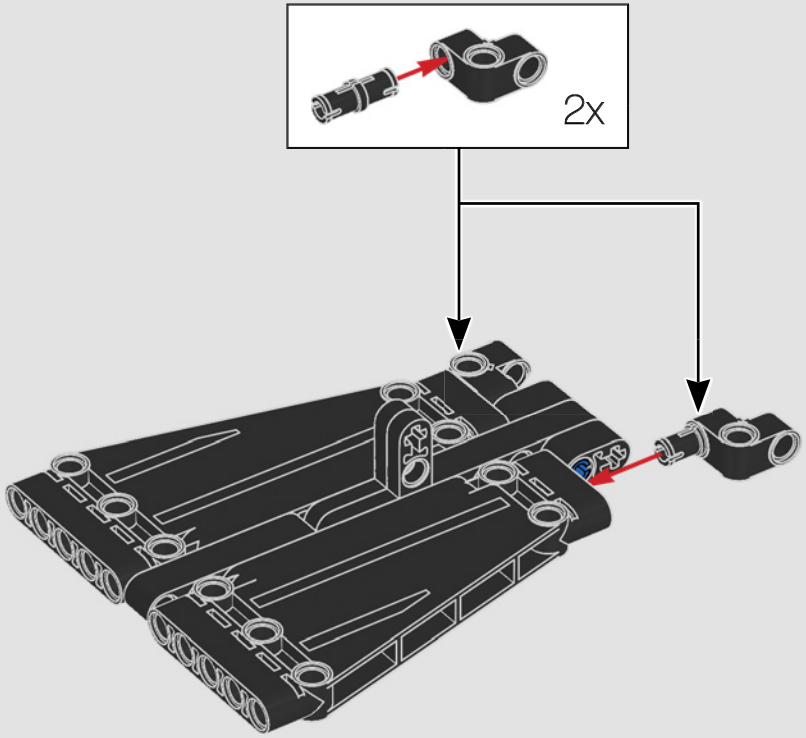

347

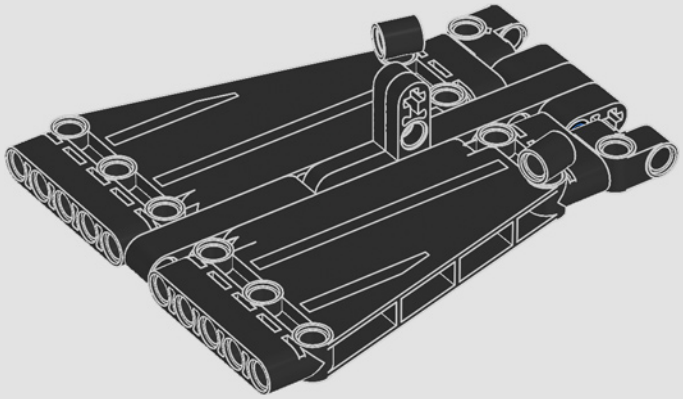

348

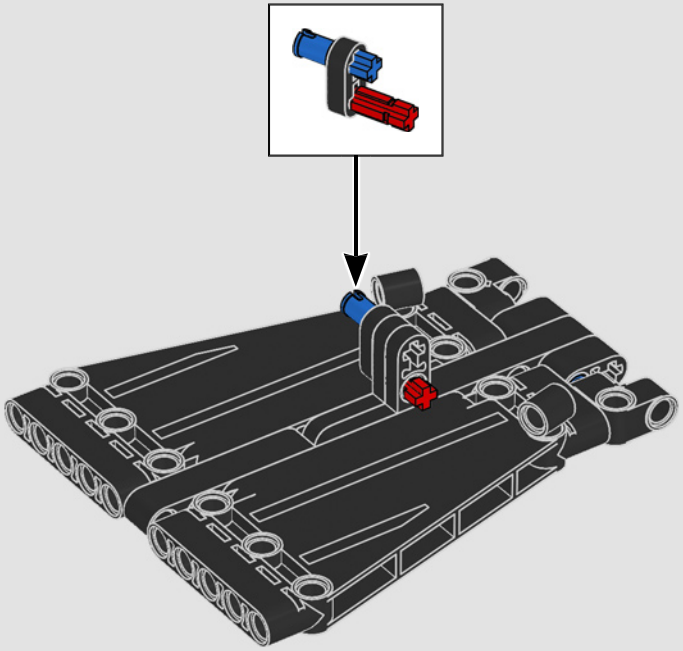

349

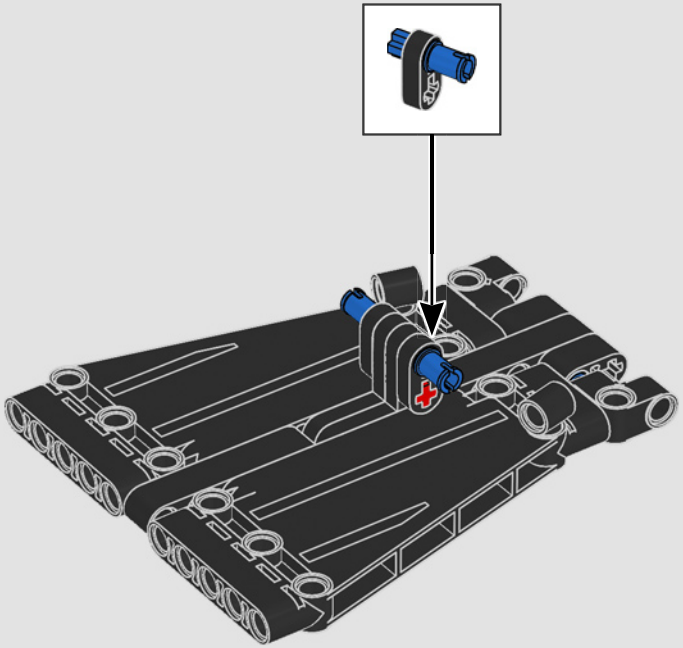

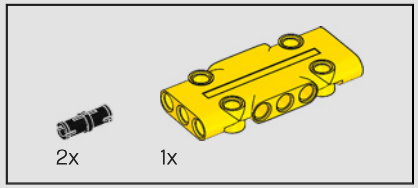

350

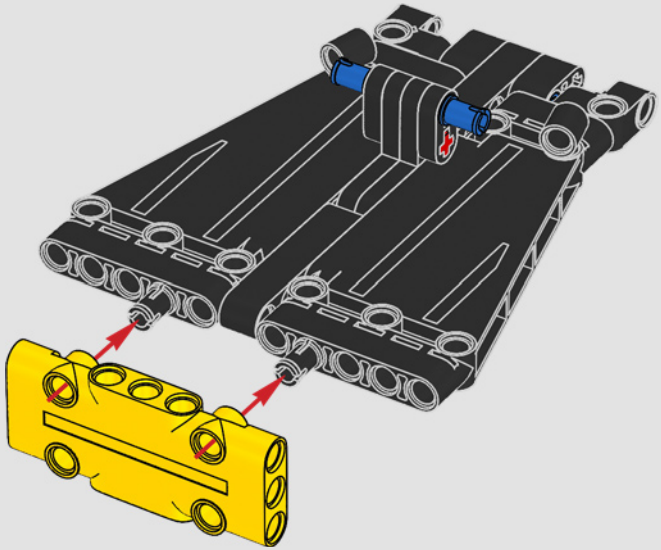

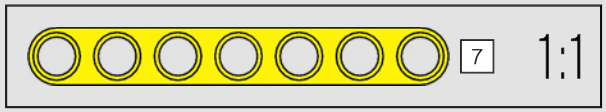

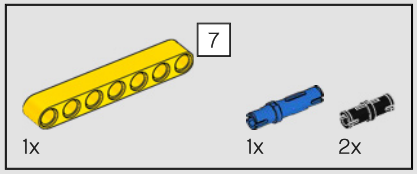

351

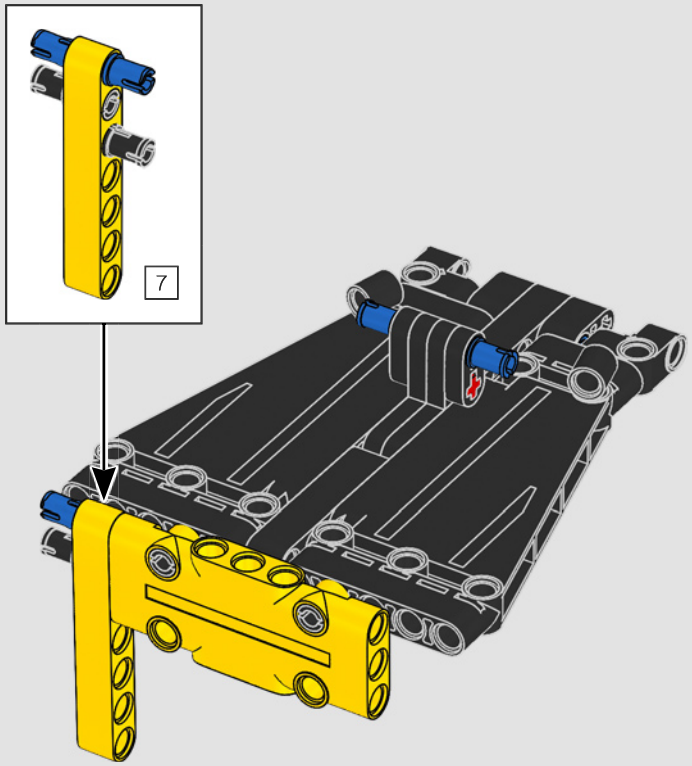

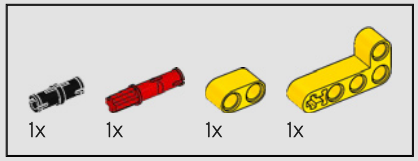

352

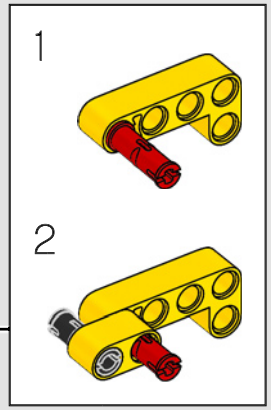

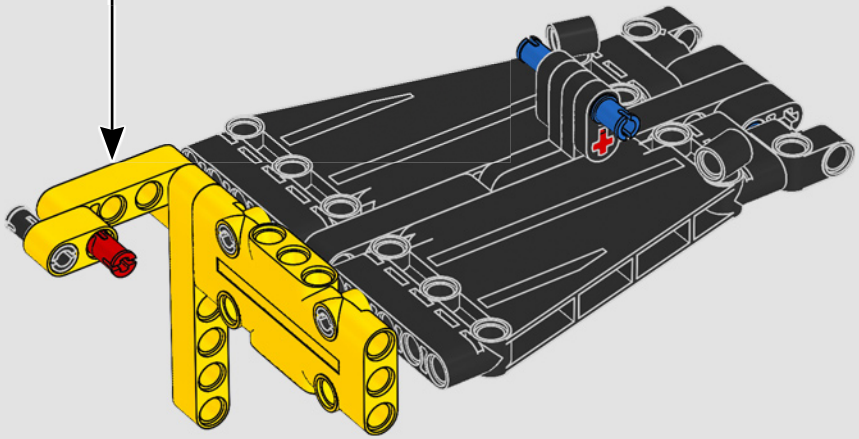

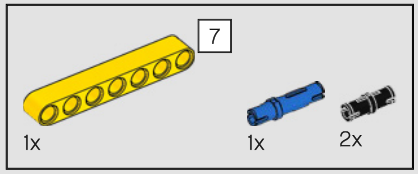

353

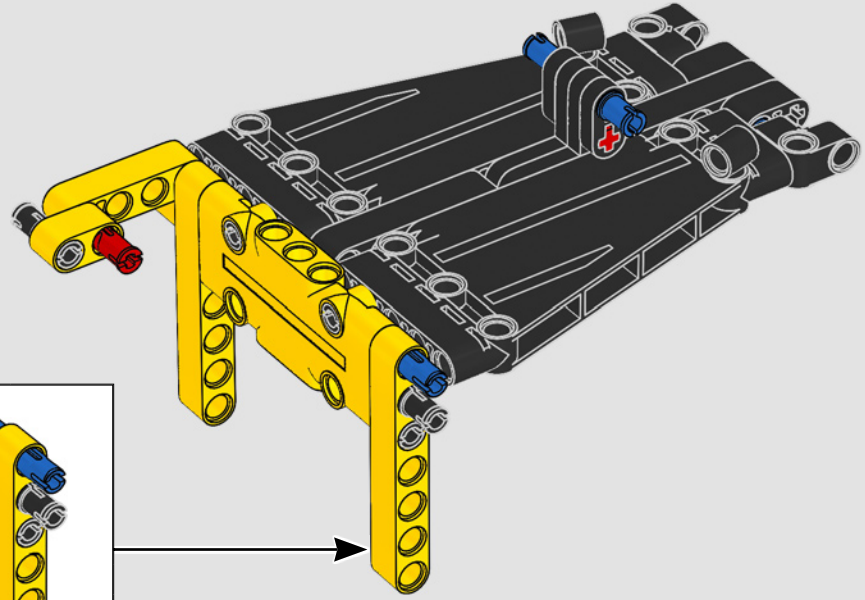

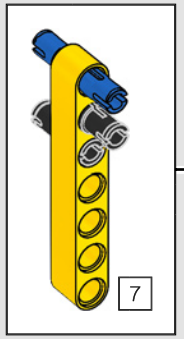

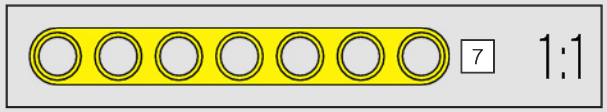

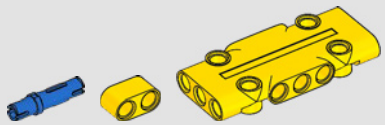

354

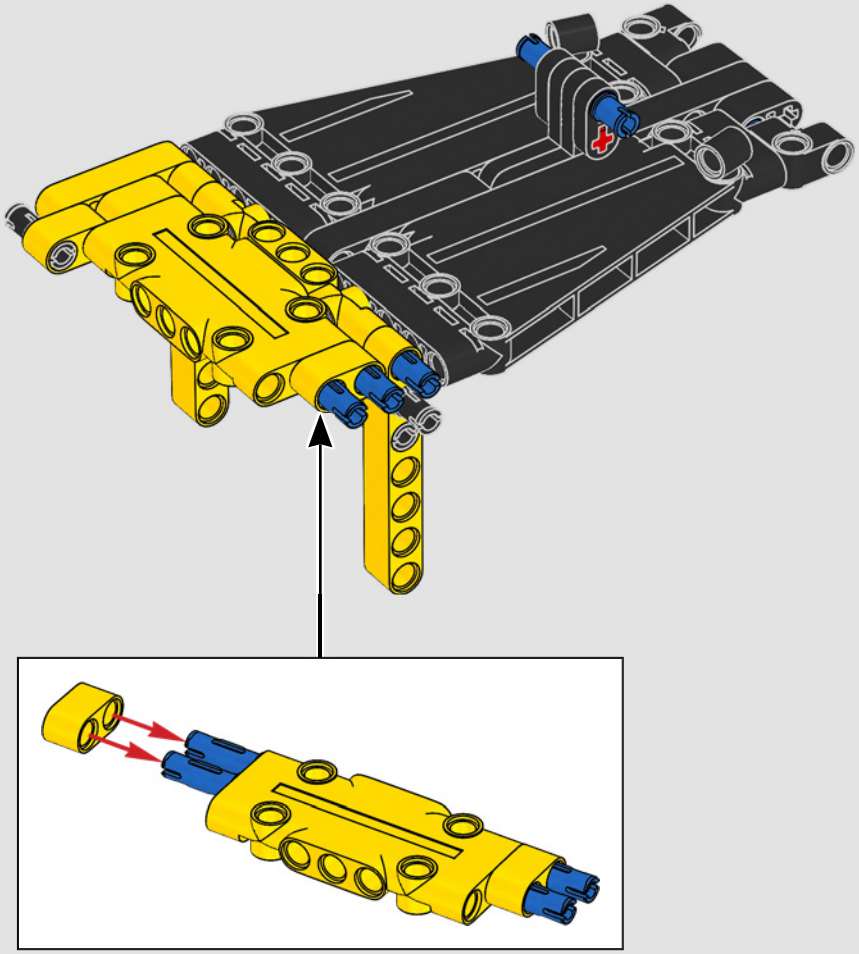

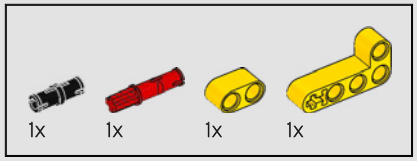

355

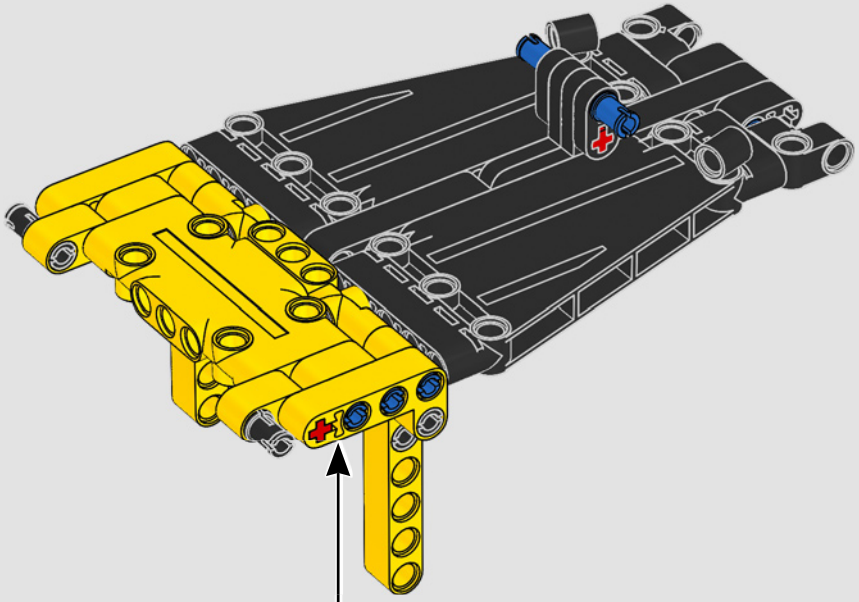

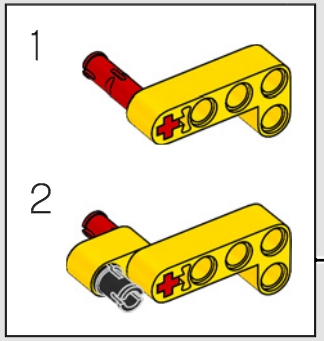

356

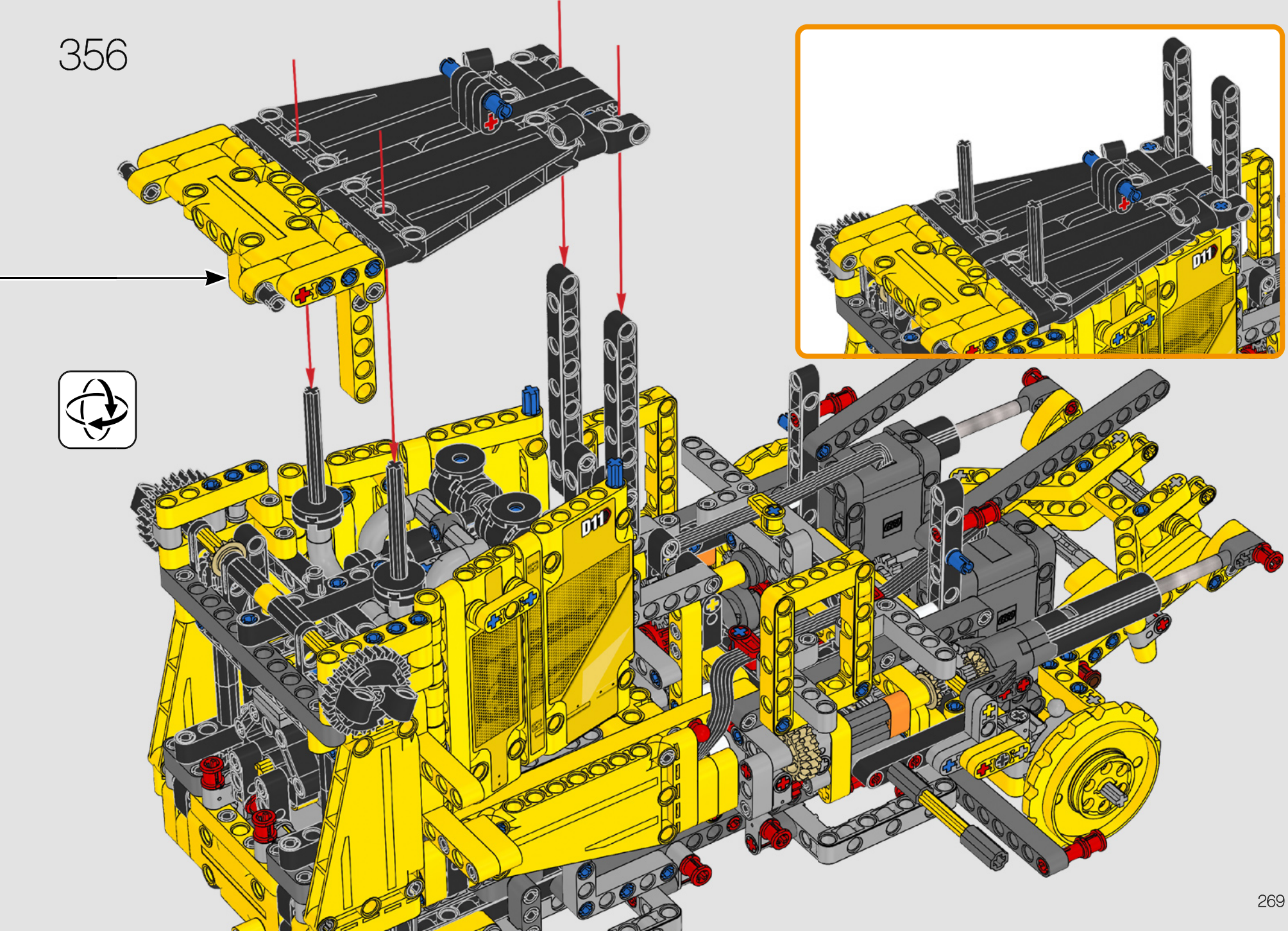

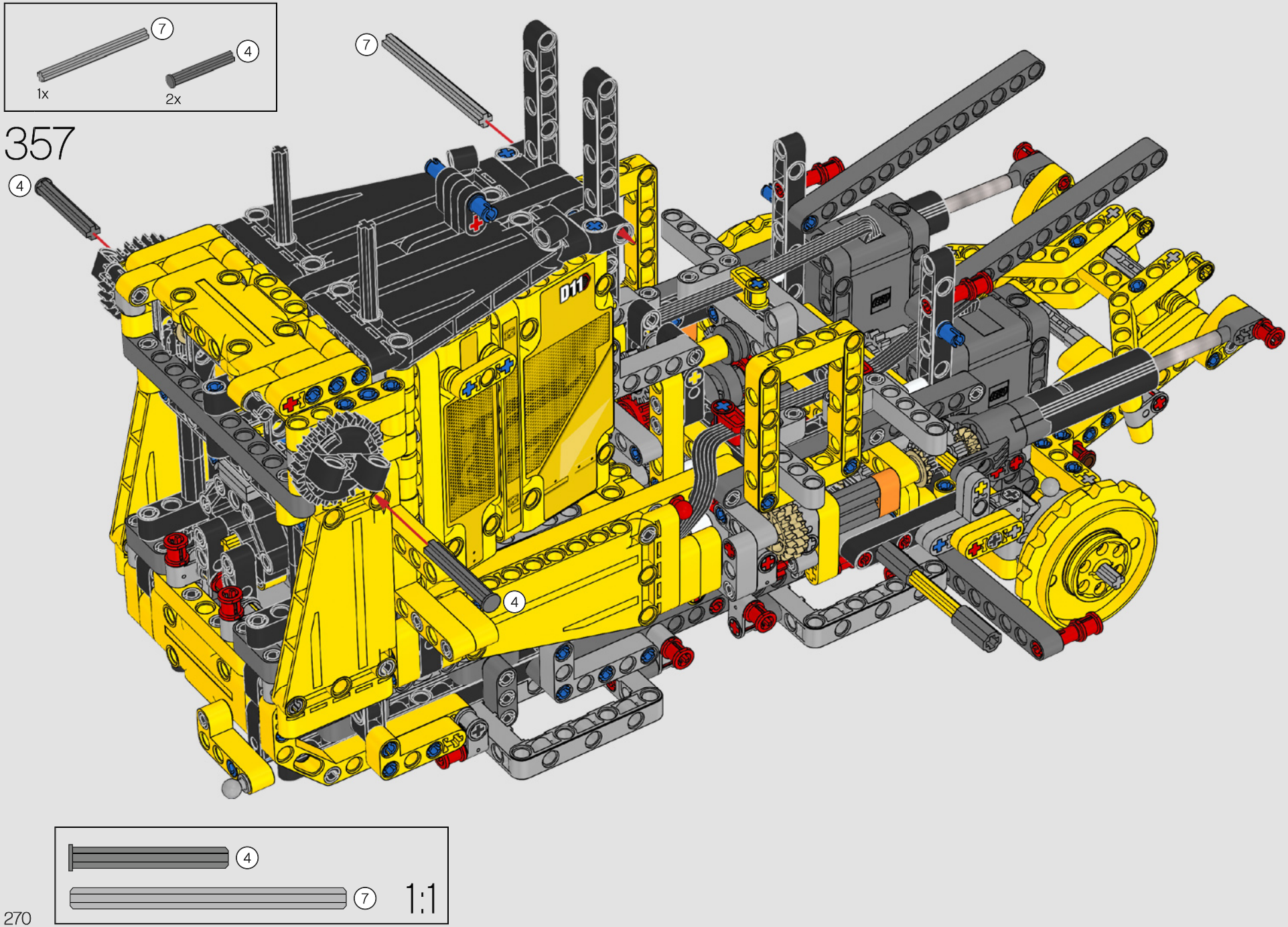
7
1x
4
2x
357
4
7
D11
4
4
7
1:1

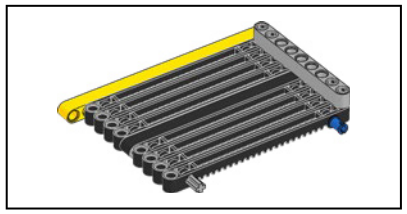

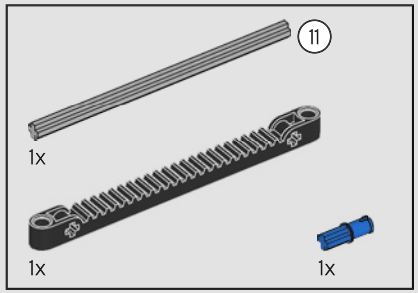

358

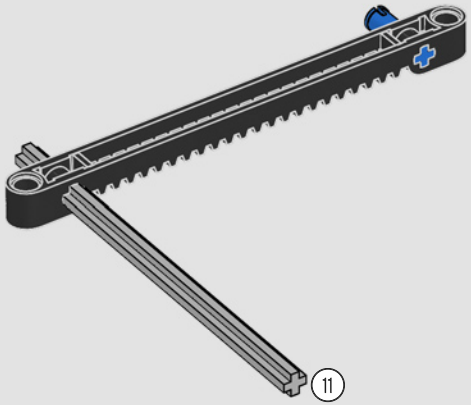

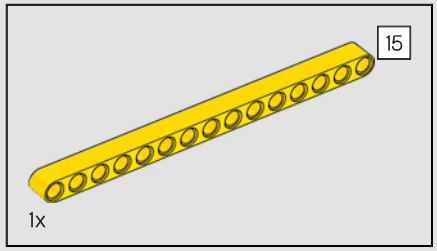

359

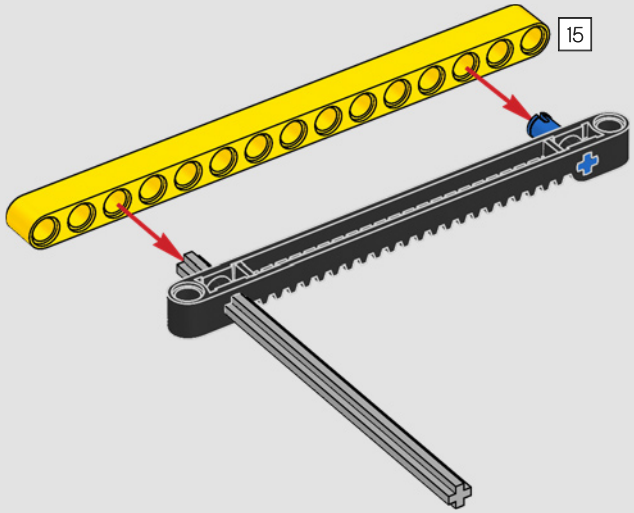

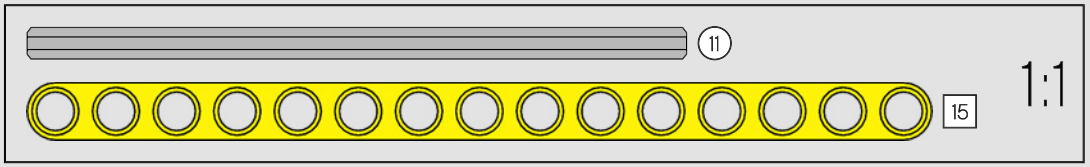

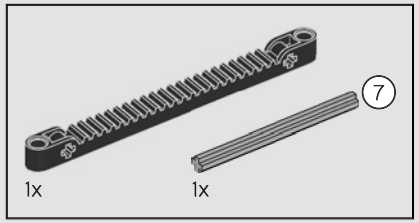

360

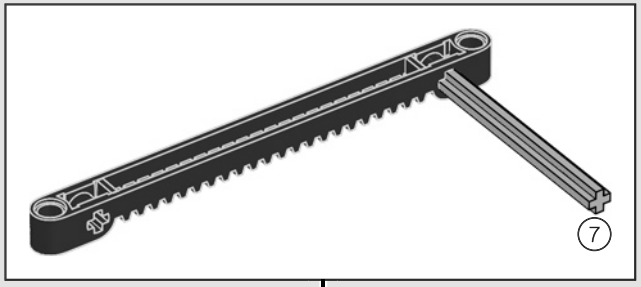

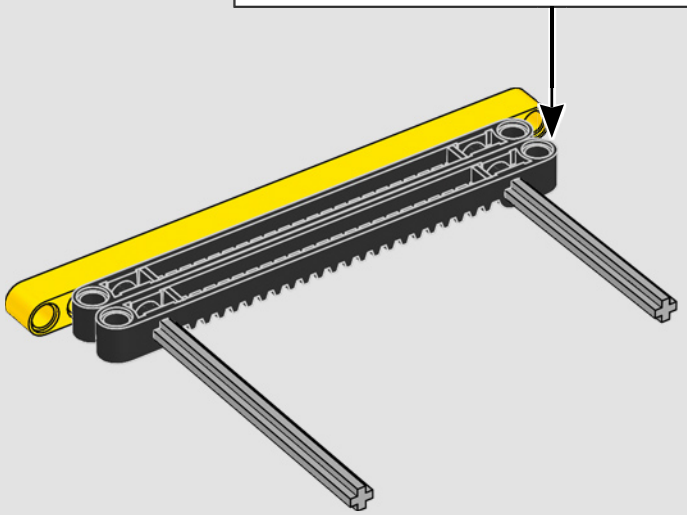

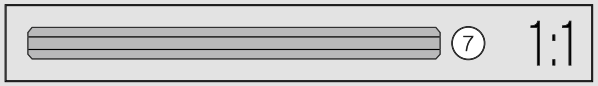

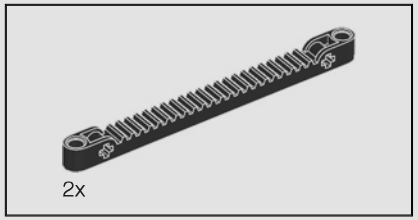

361

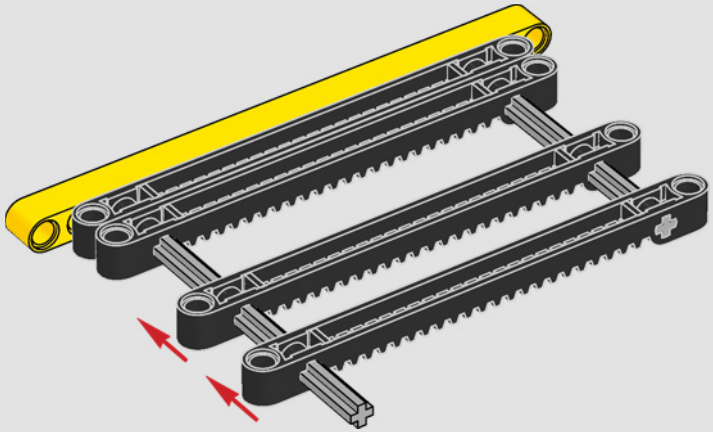

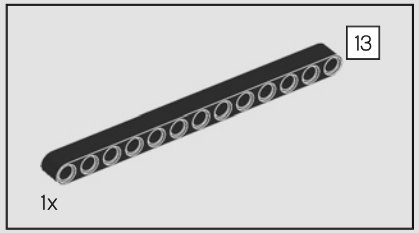

362

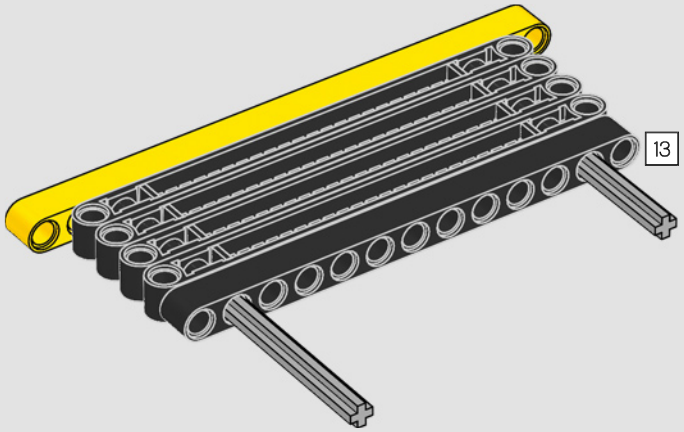

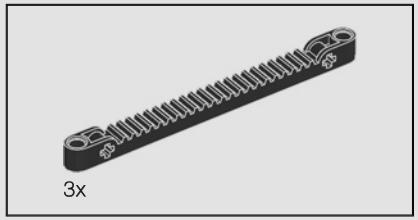

363

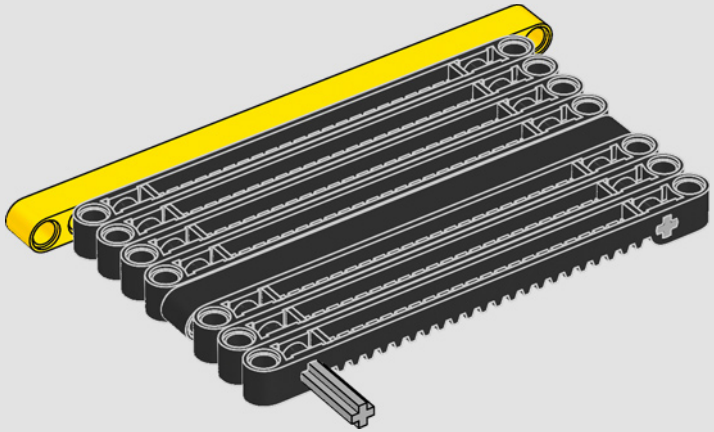

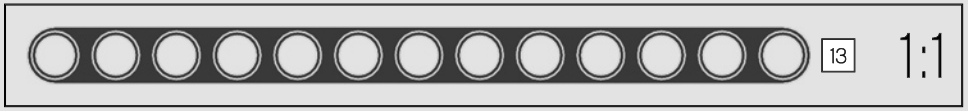

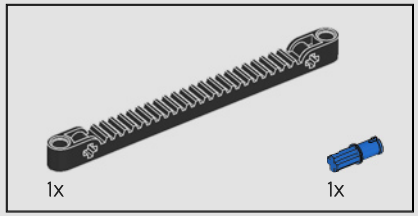

364

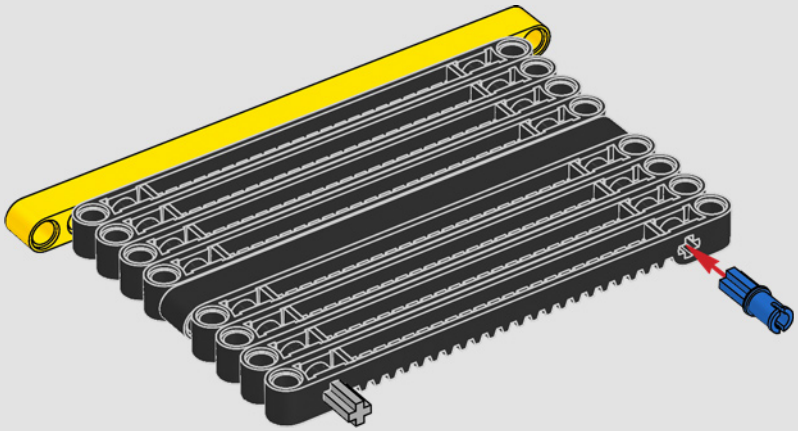

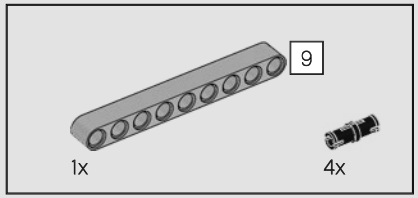

365

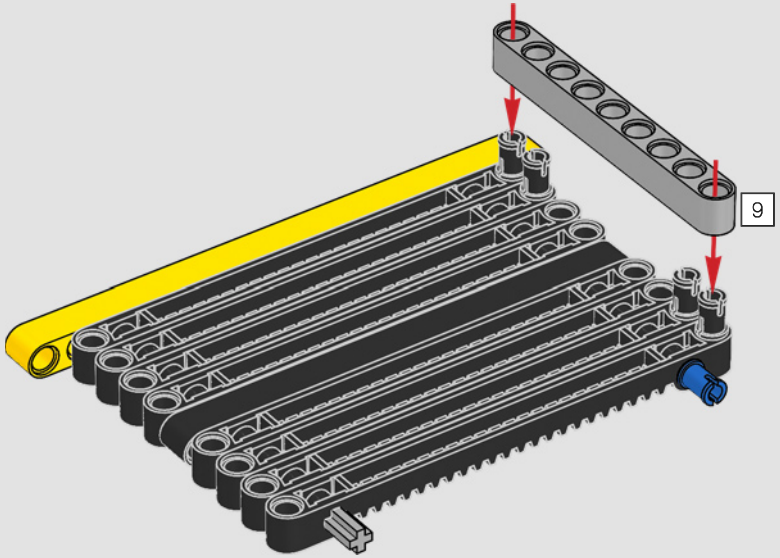

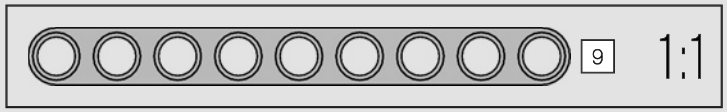

366

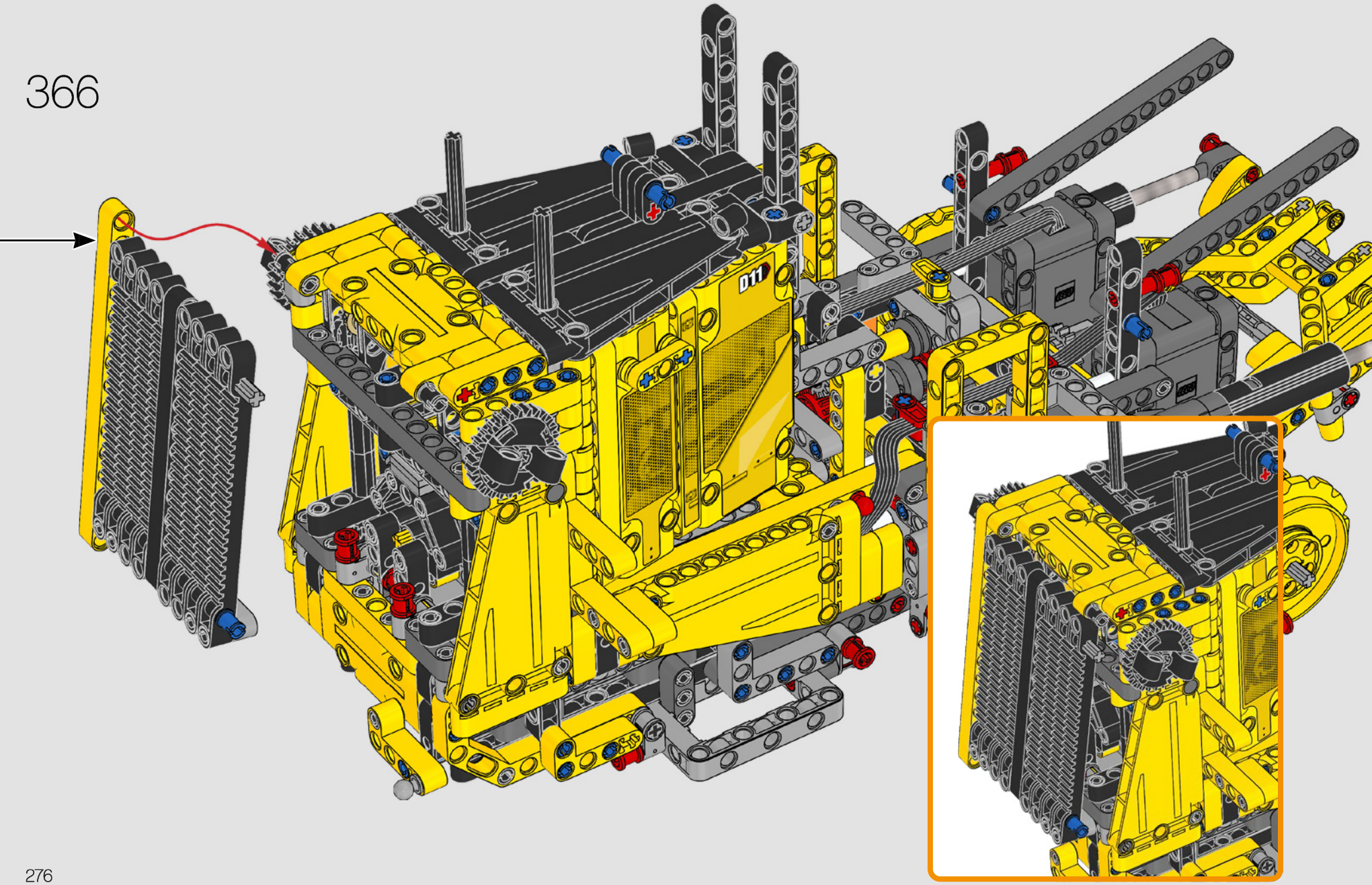

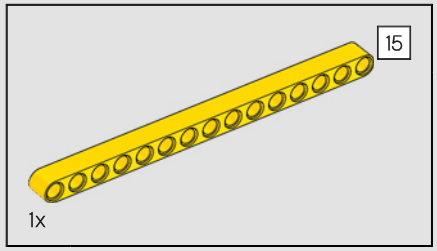

367

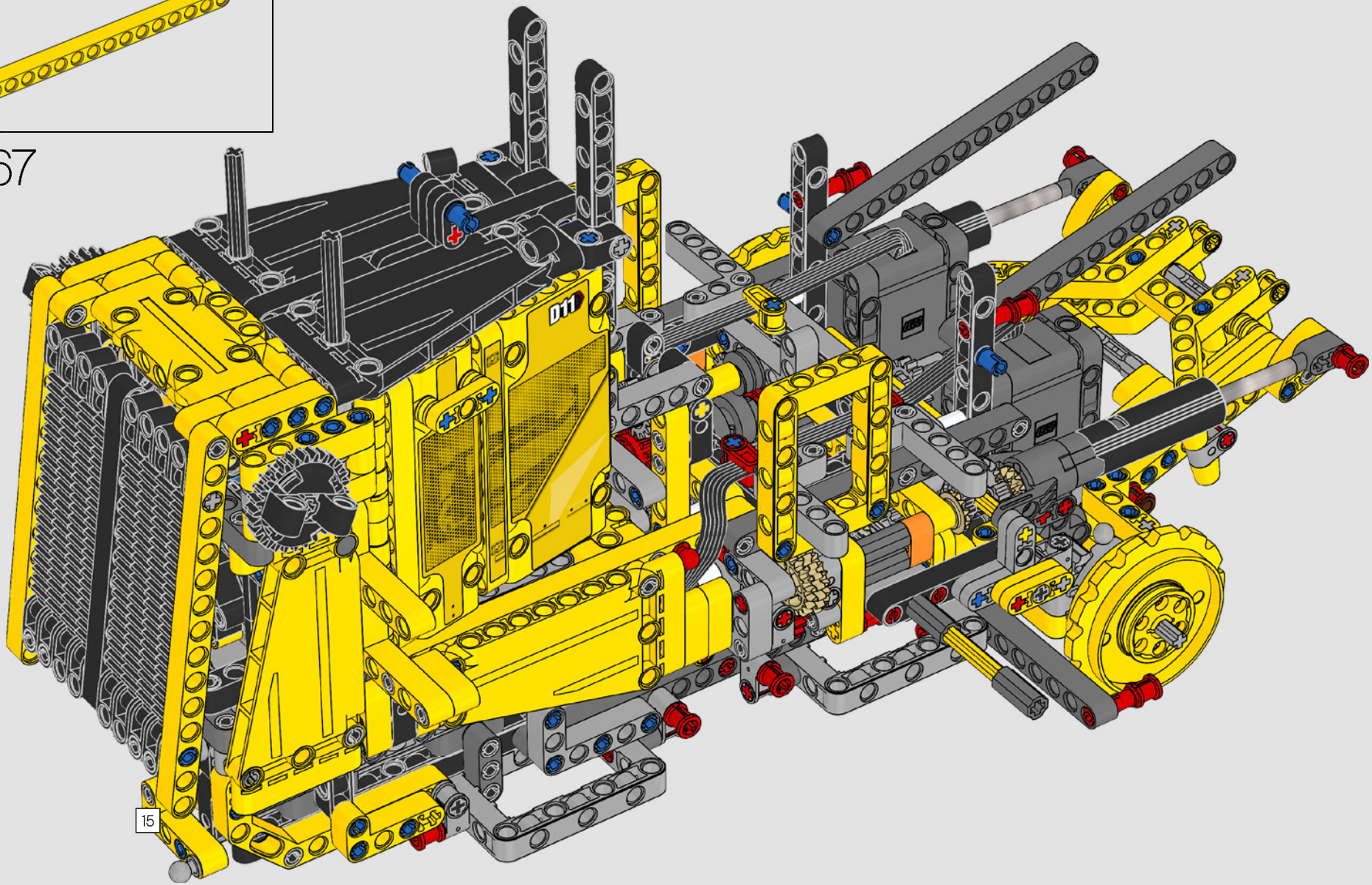

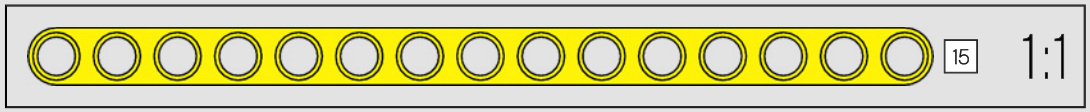

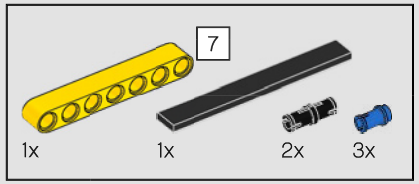

368

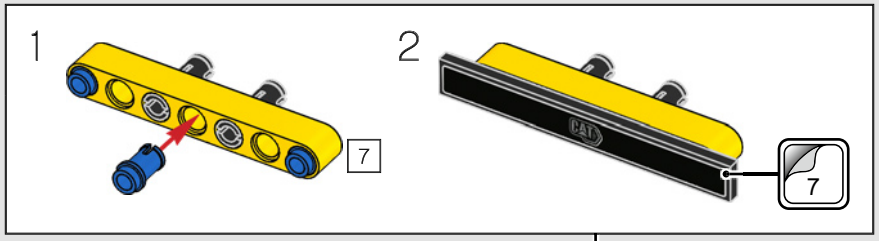

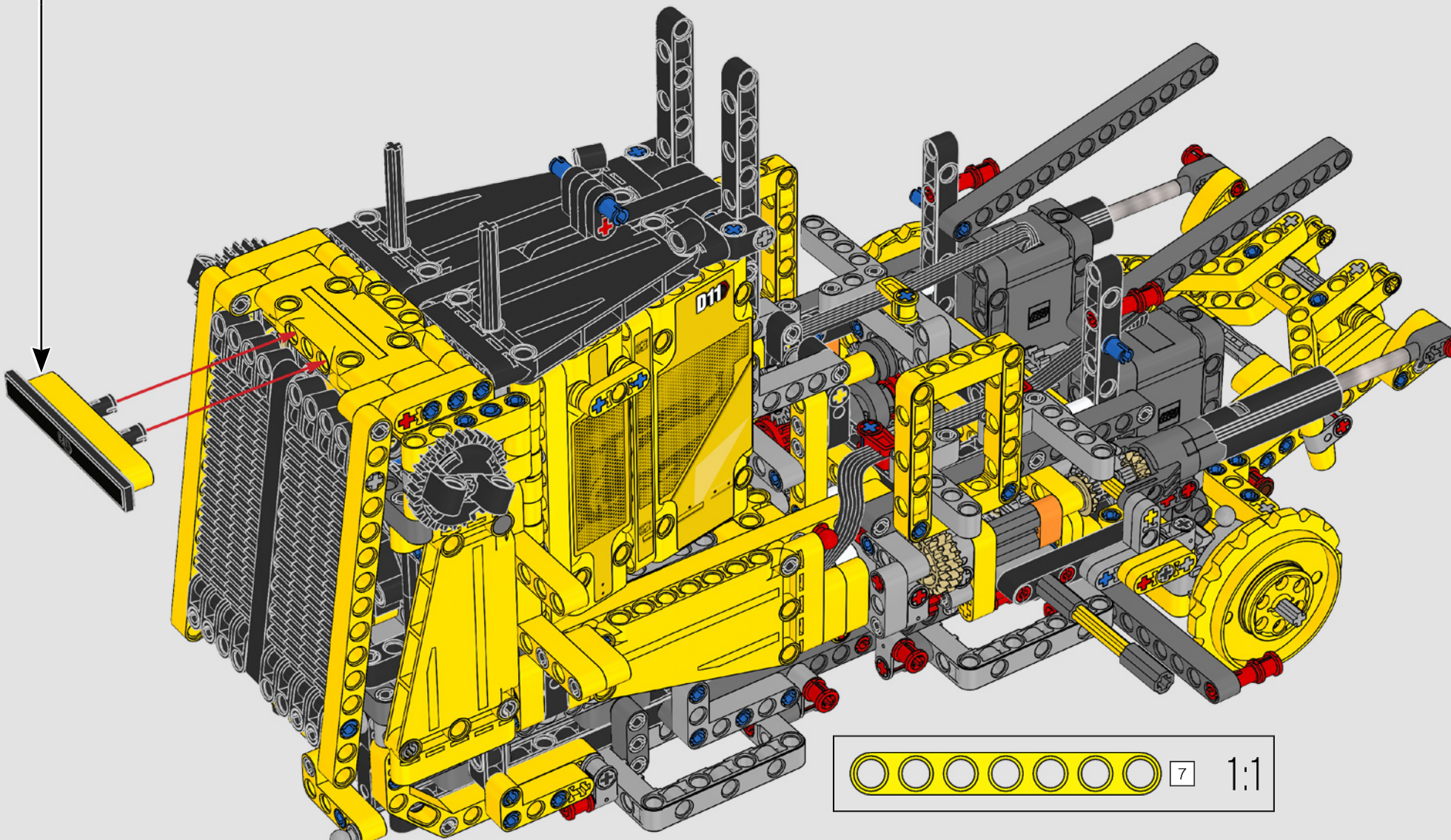

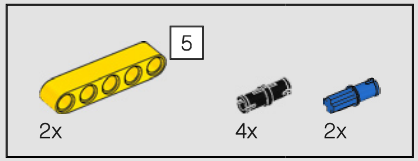

369

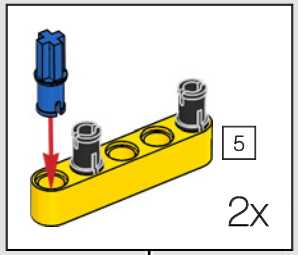

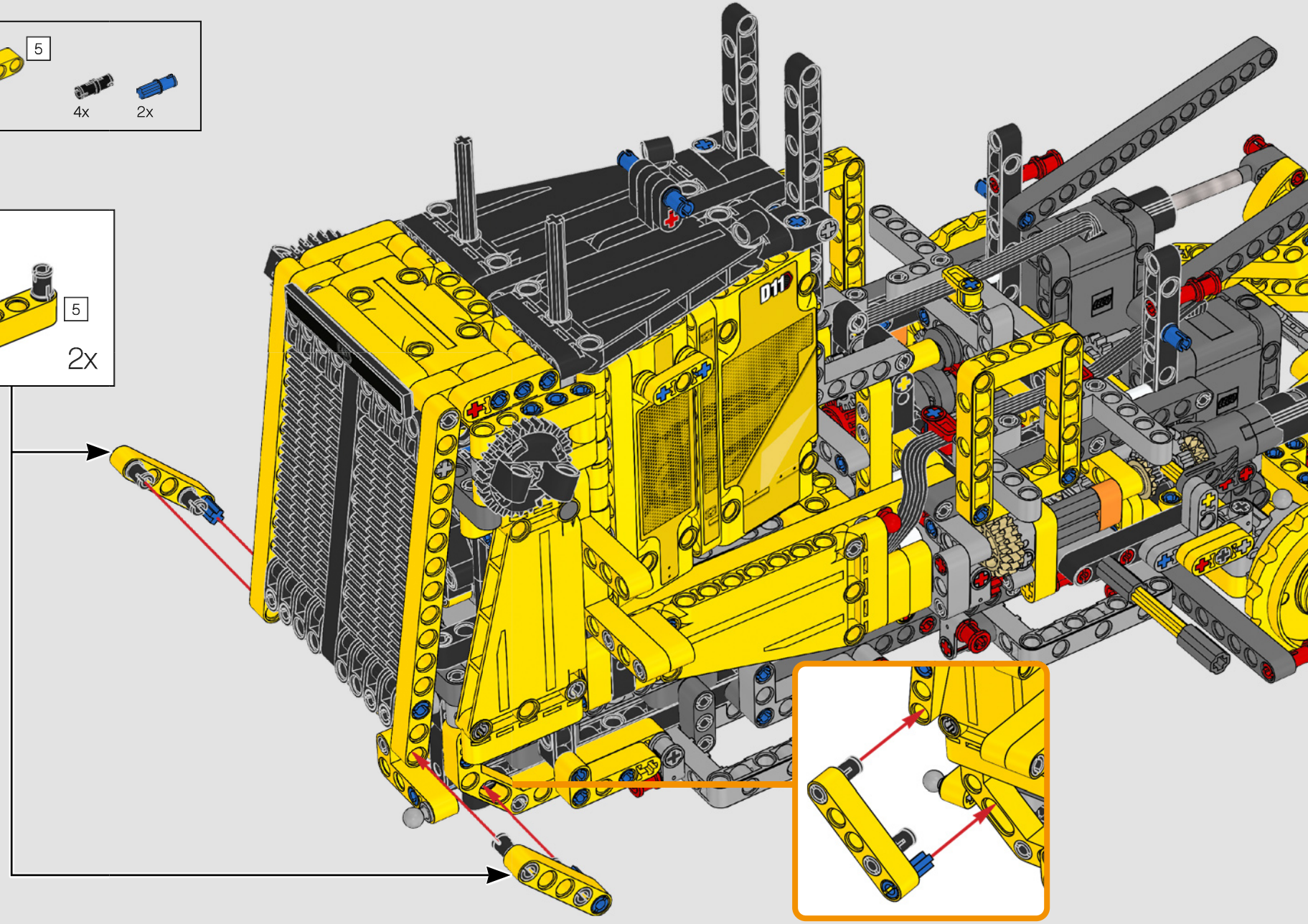

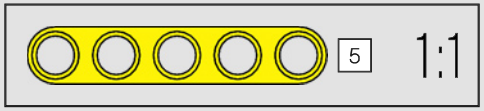

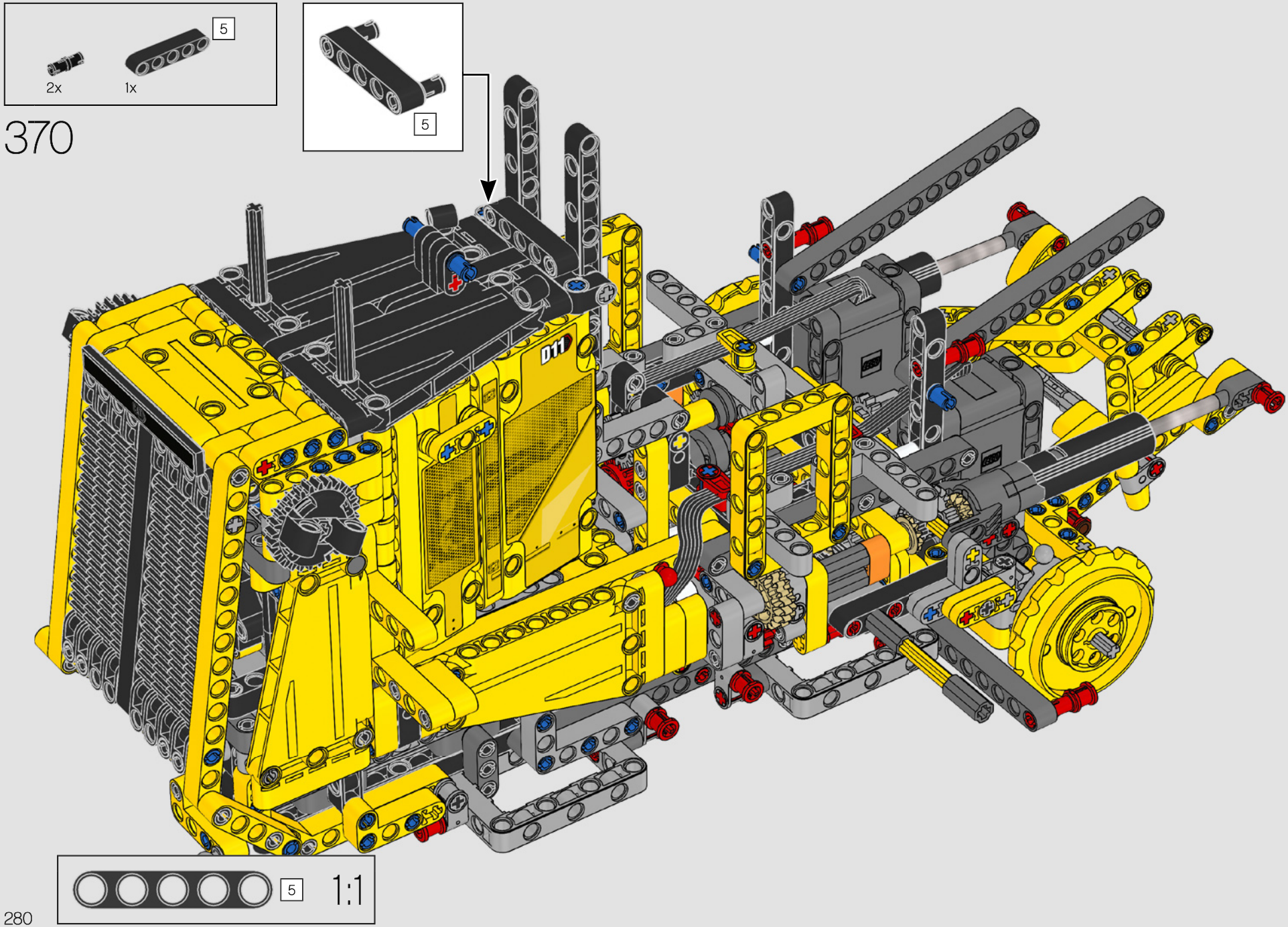
5
2x
1x
5
370
D11
5
1:1

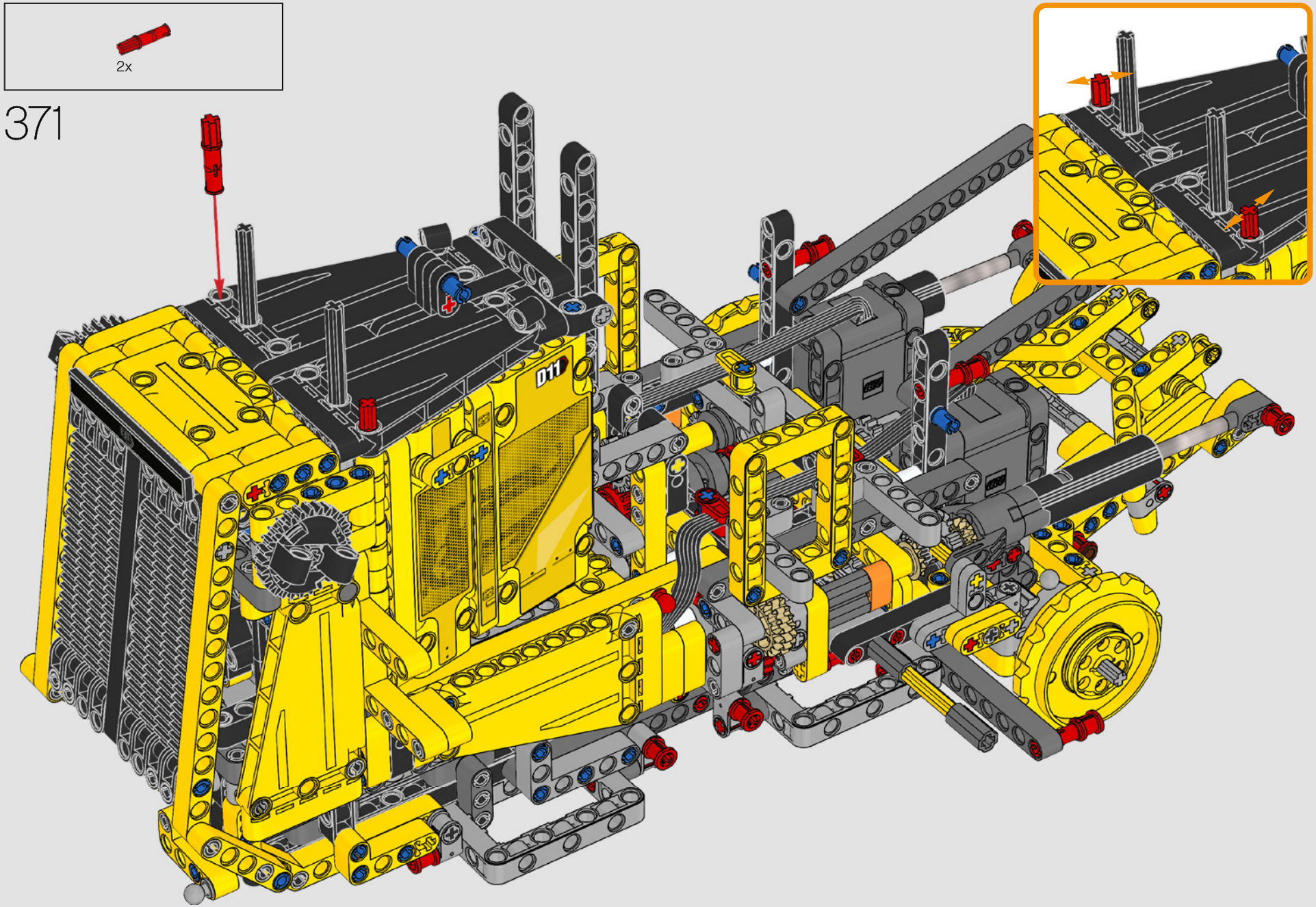
2x
371
D11

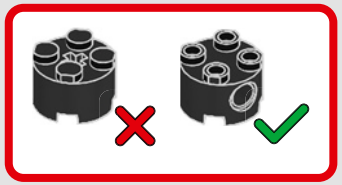

372

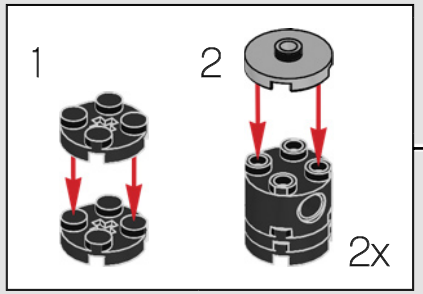

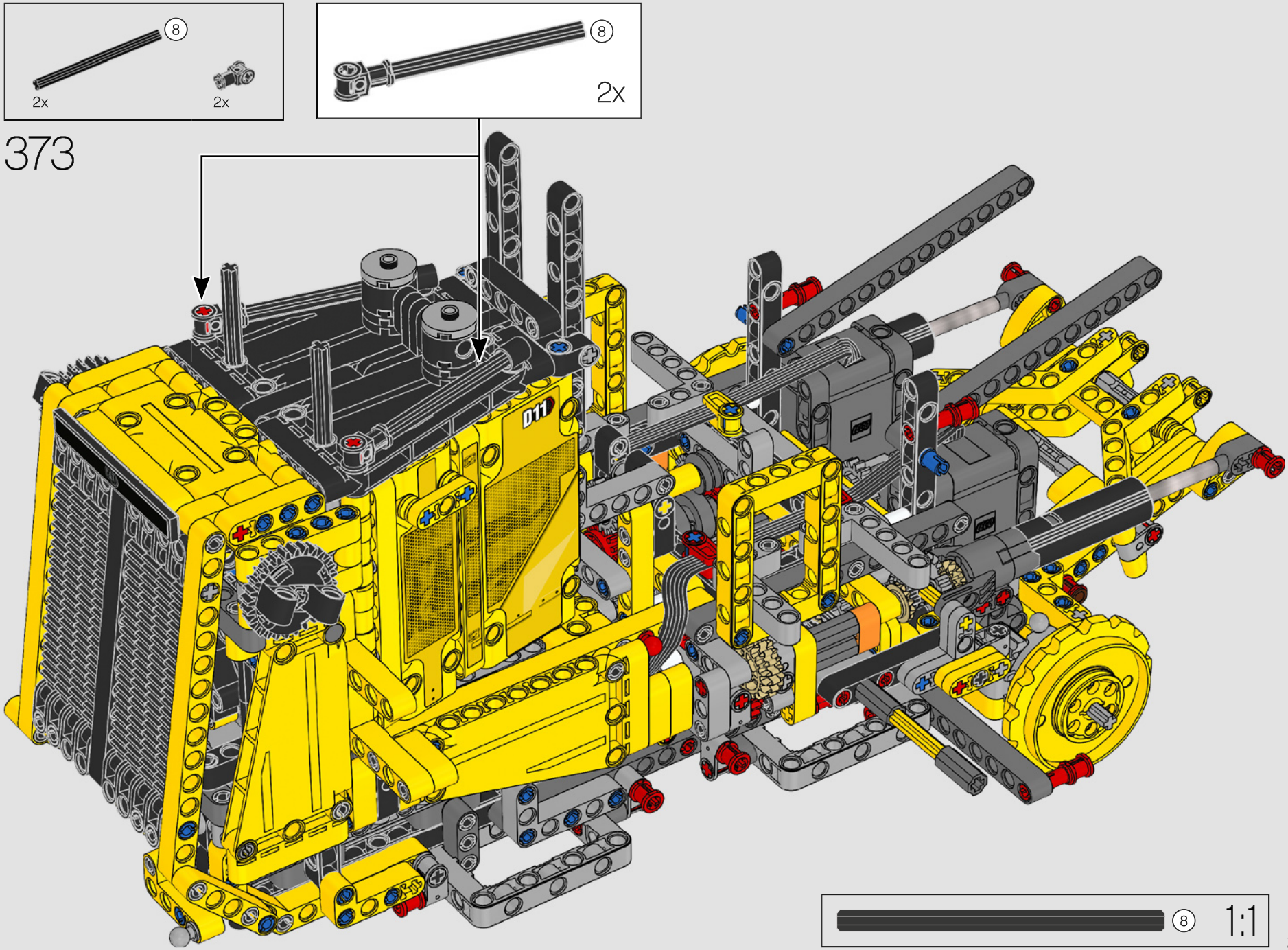
8
2x
2x
8
2x
373
D11
8
1:1

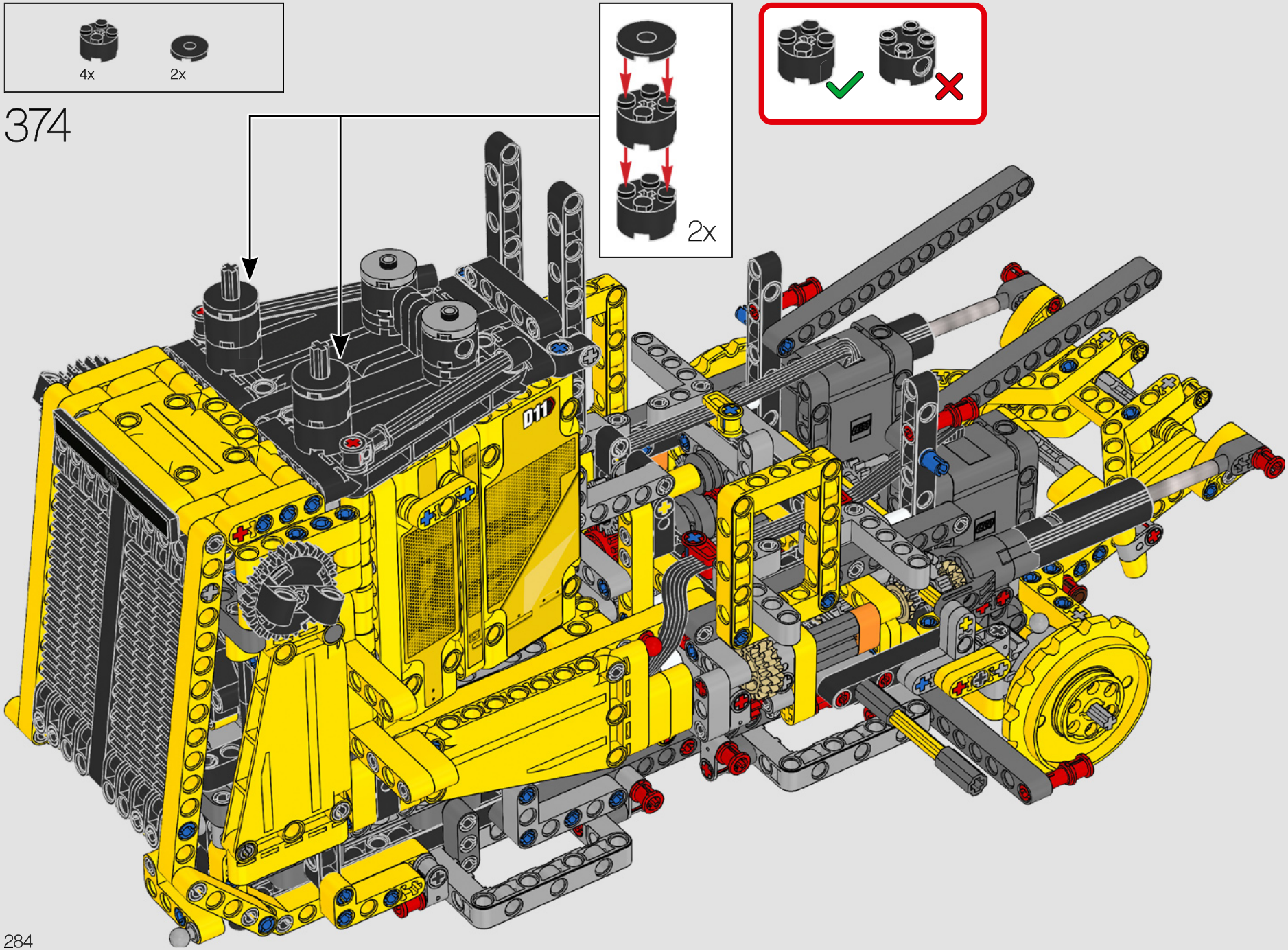
4x
2x
374
2x
D11

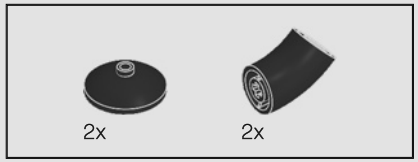

375

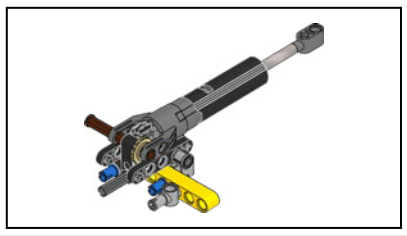

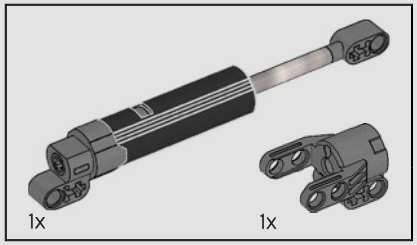

376

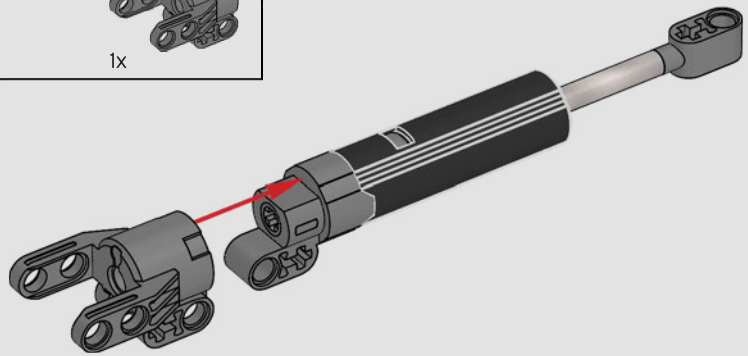

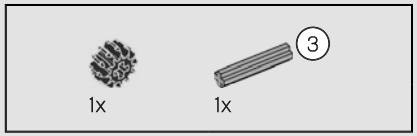

377

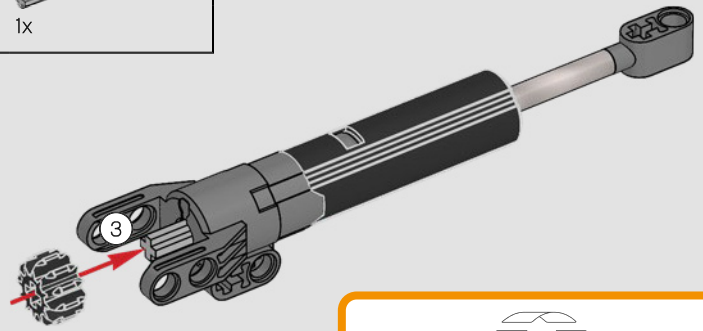

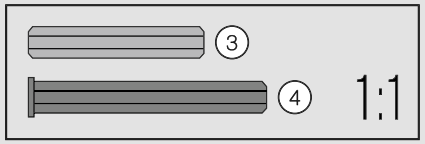

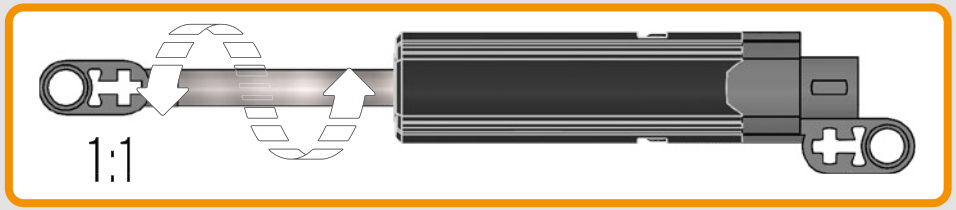

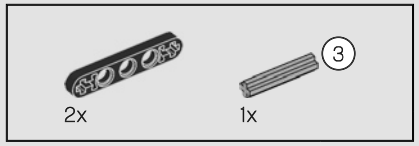

378

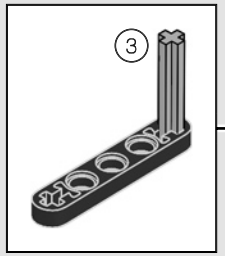

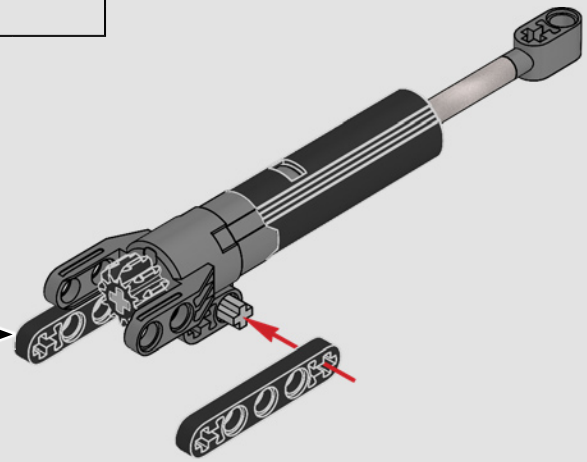

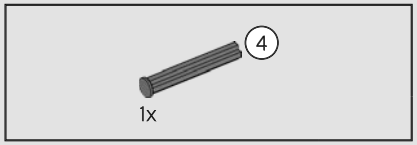

379

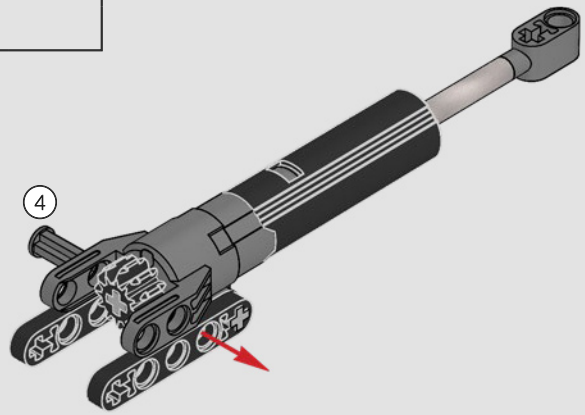

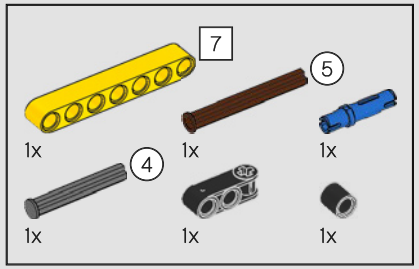

380

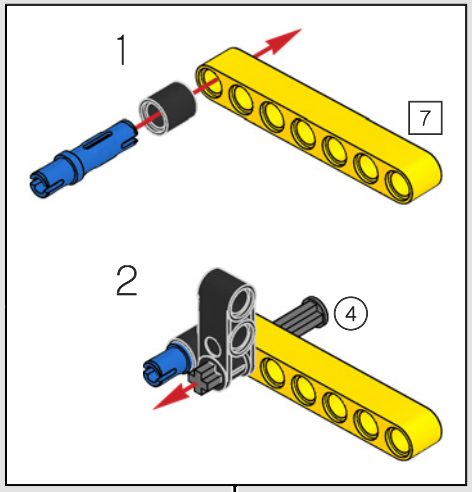

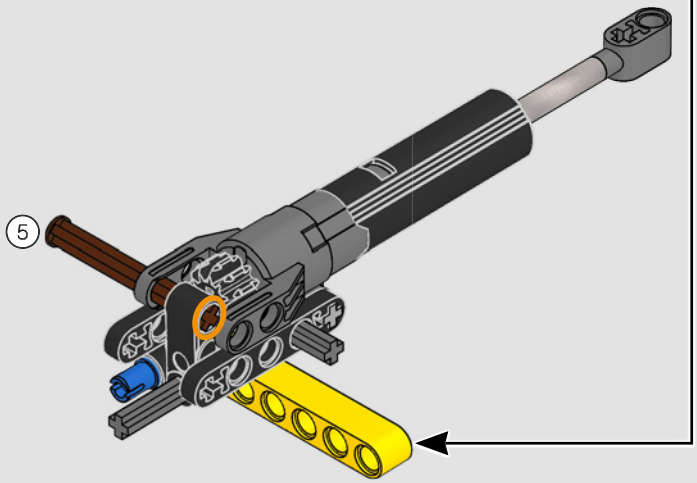

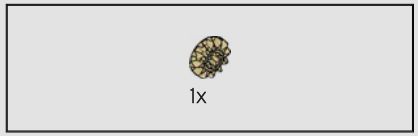

381

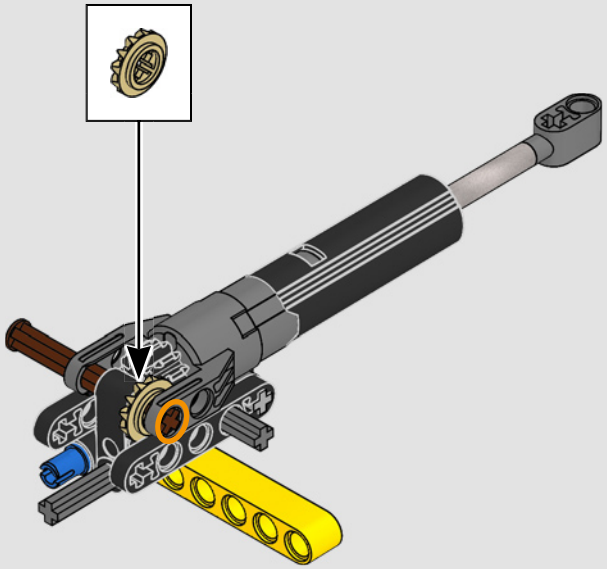

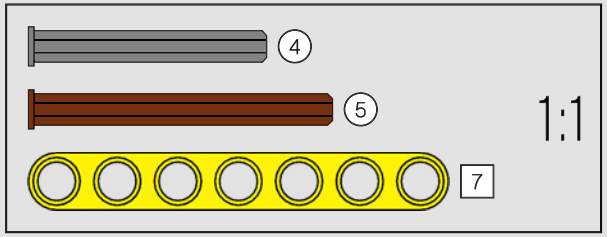

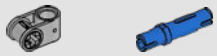

382

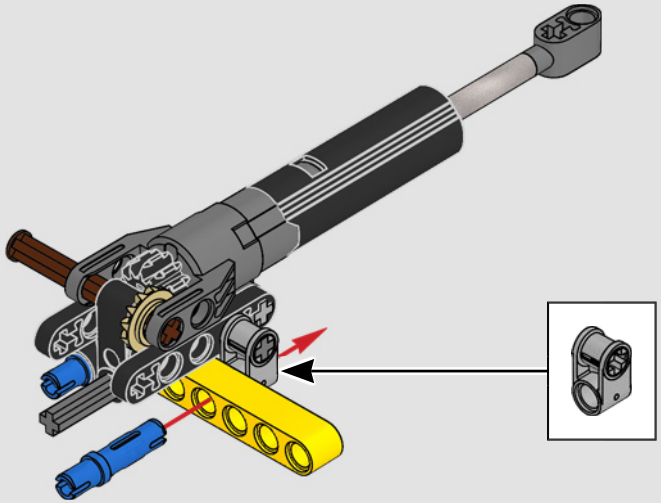

383

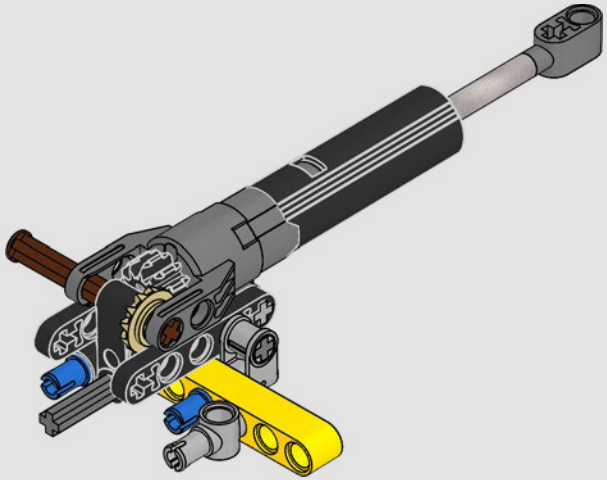

384

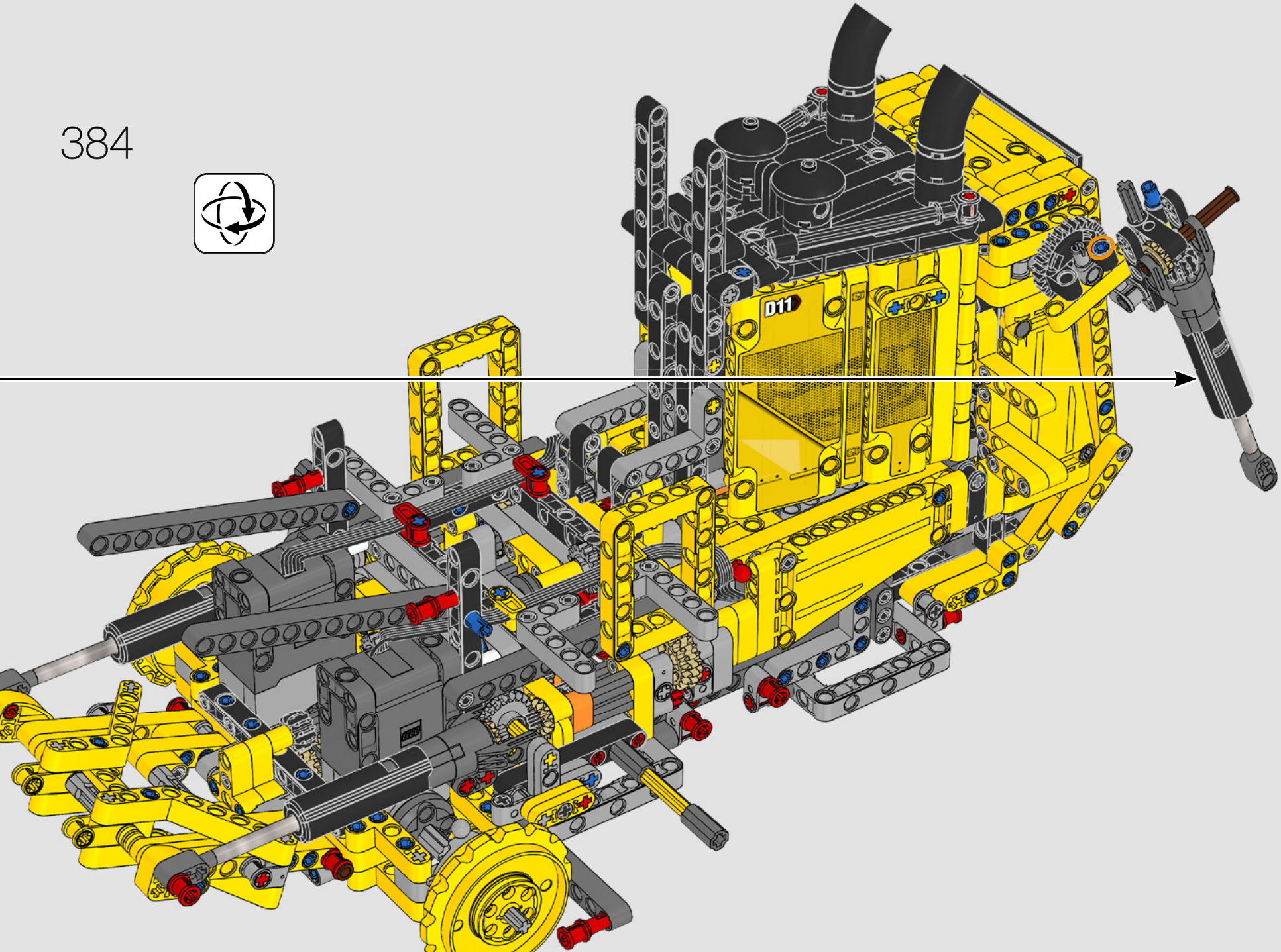

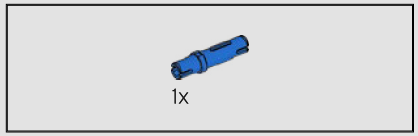

385

386

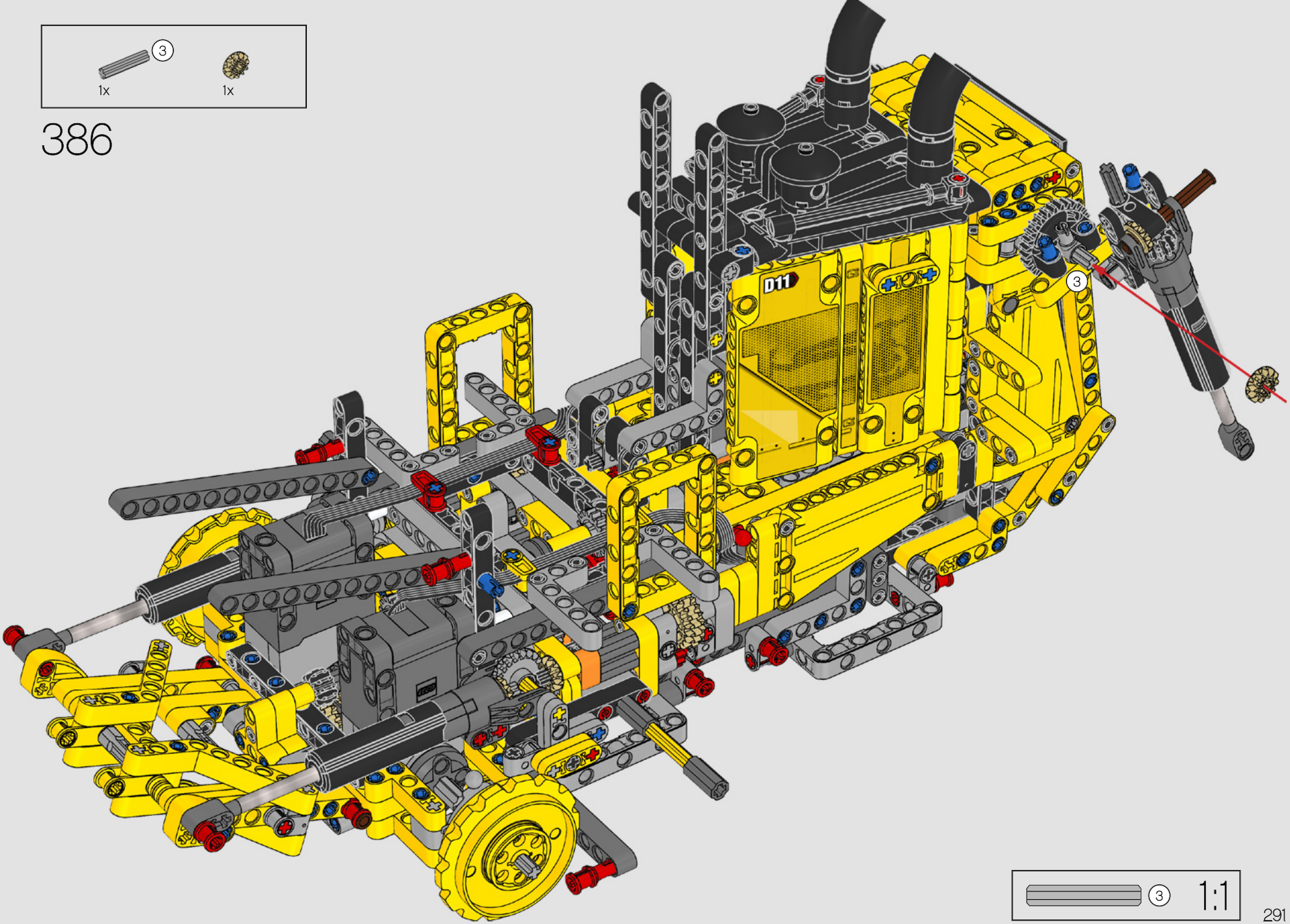

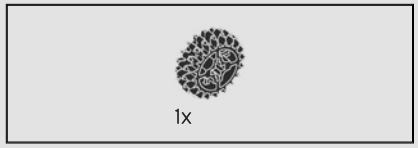

387

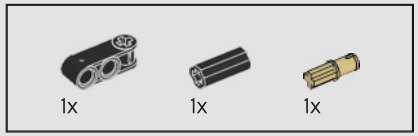

388

389

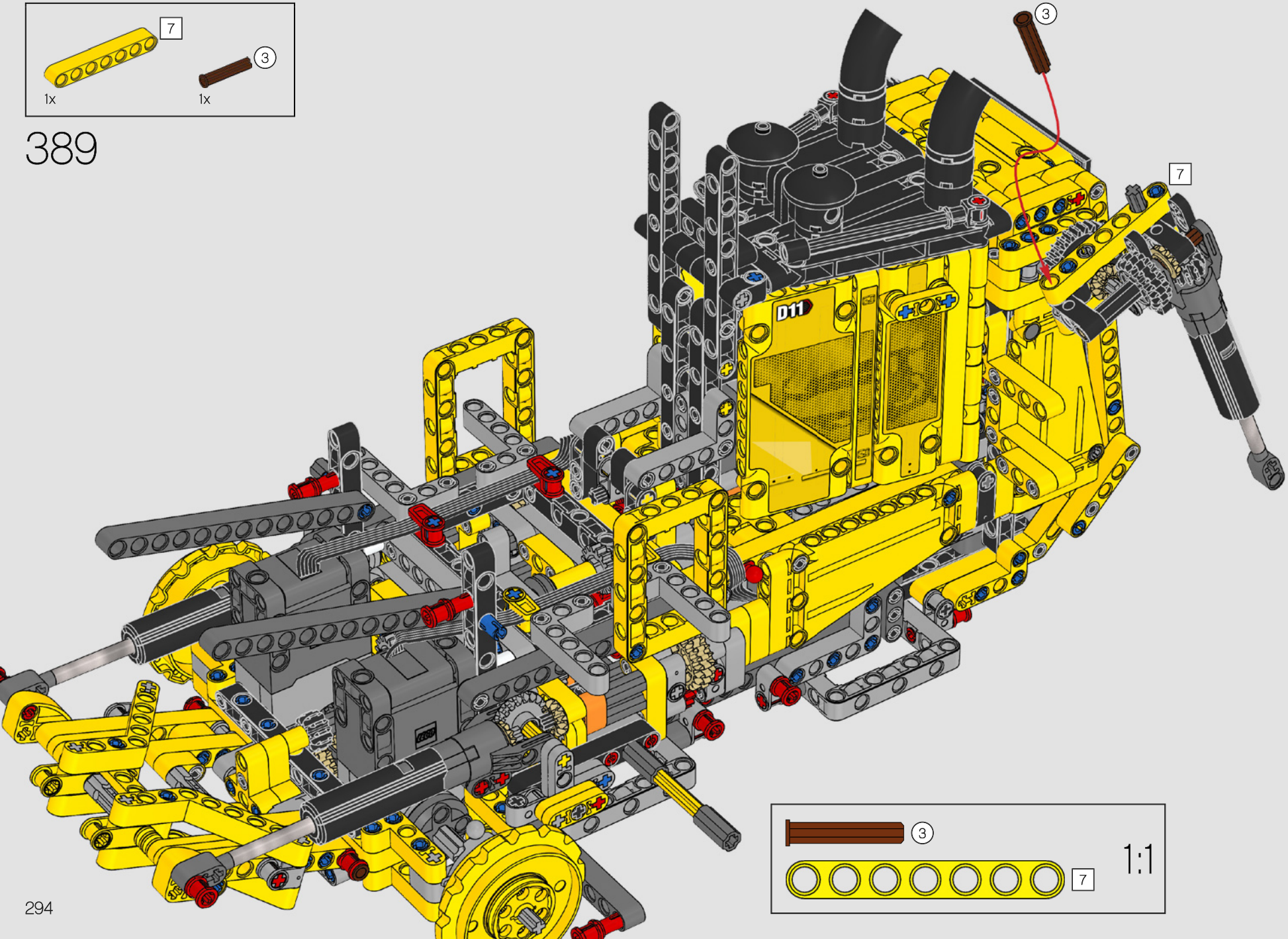

390

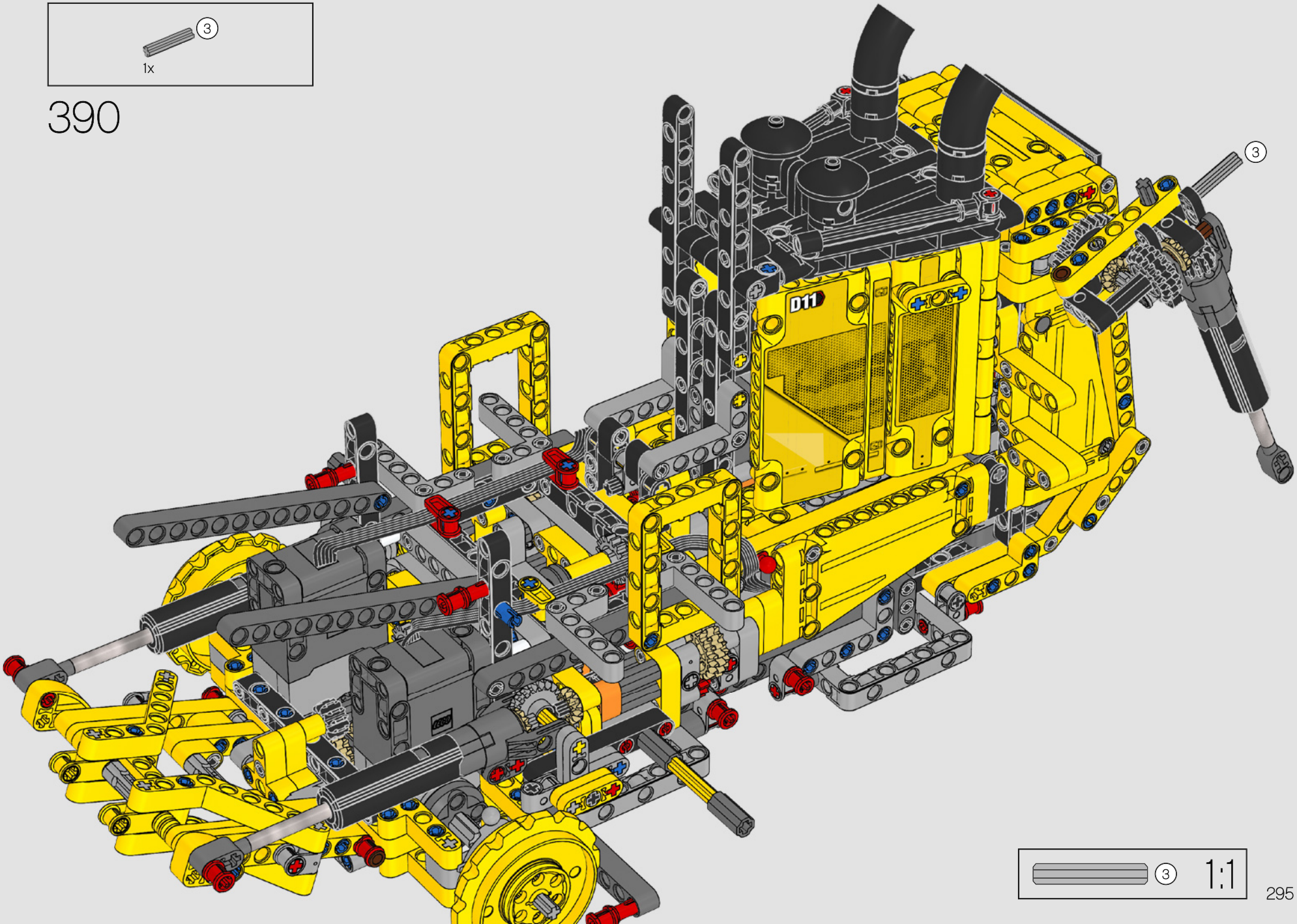

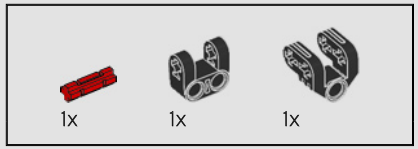

391

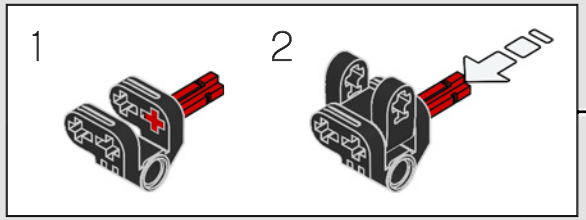

392

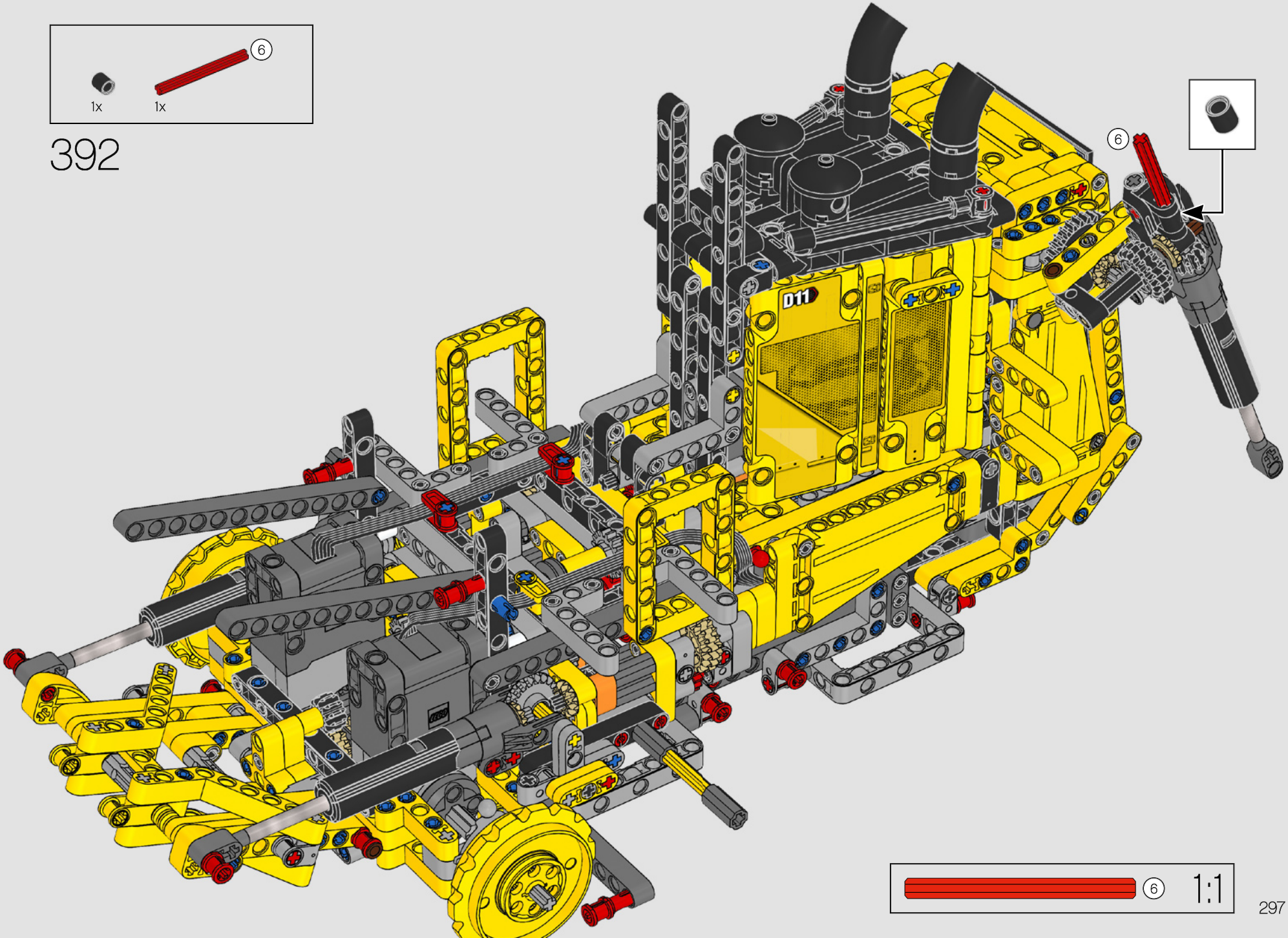

393

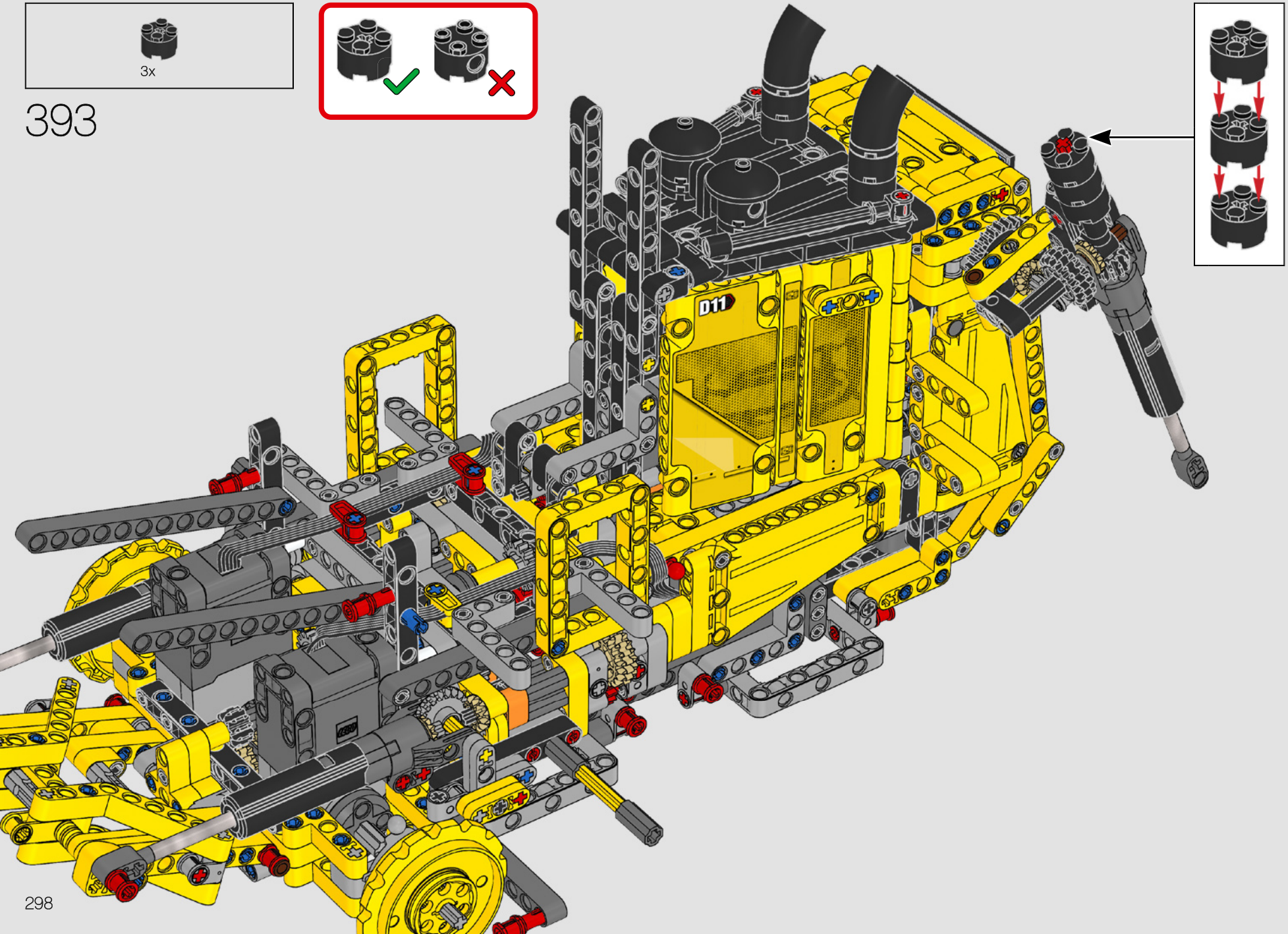

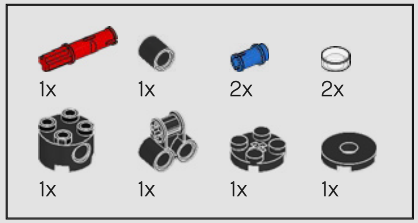

394

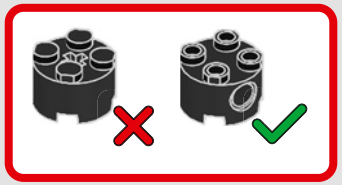

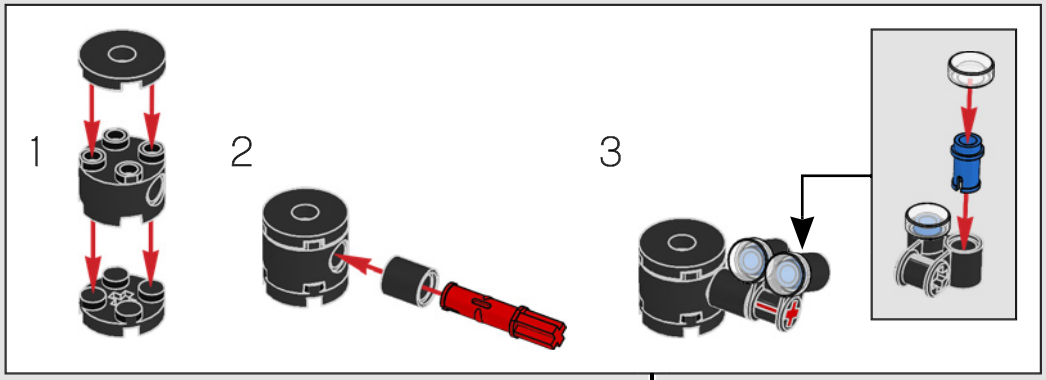

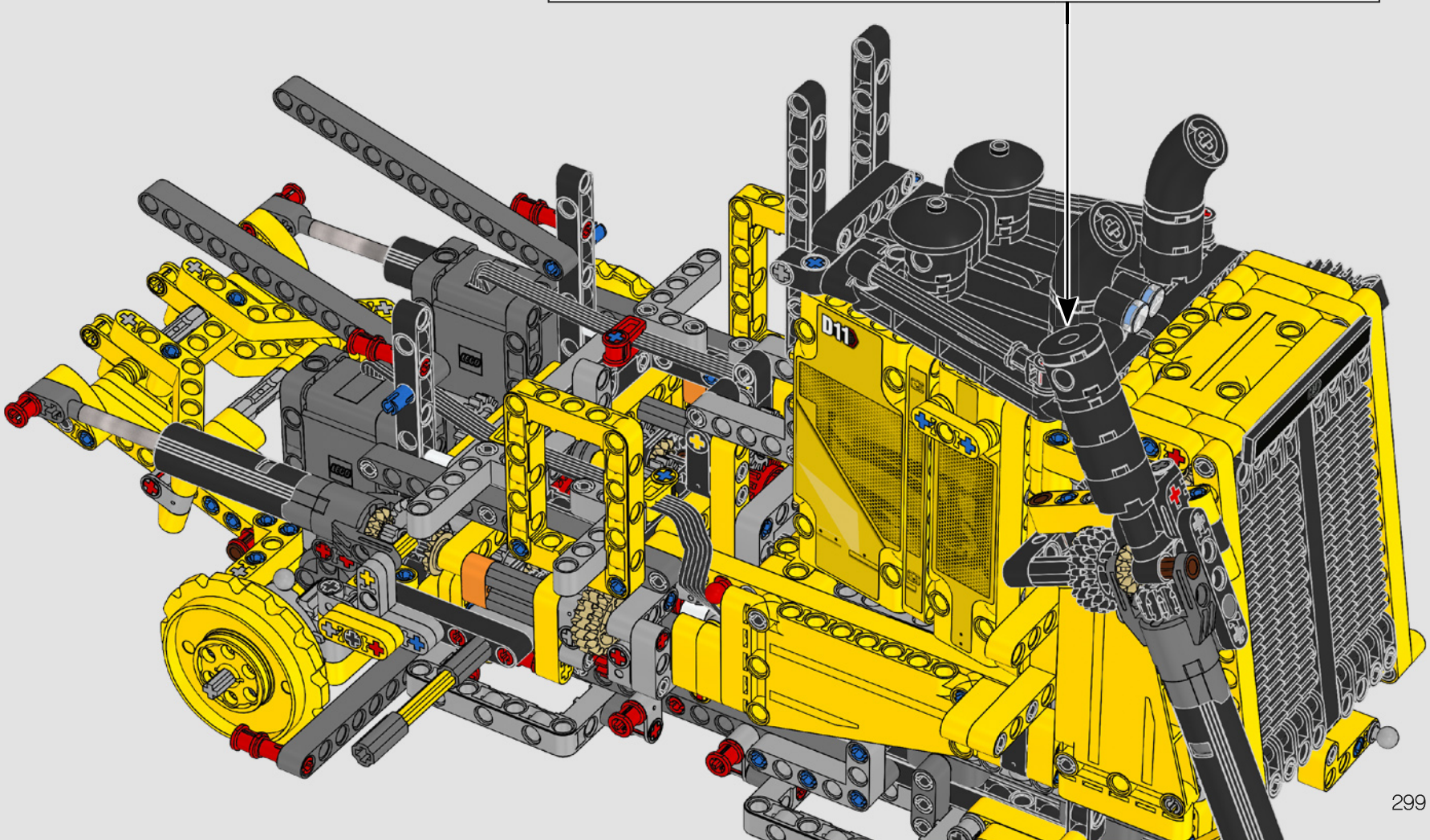

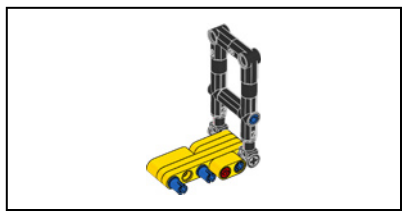

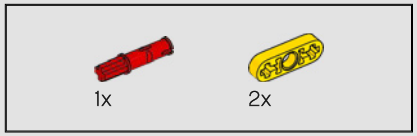

395

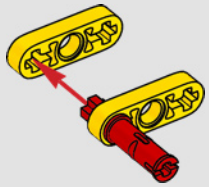

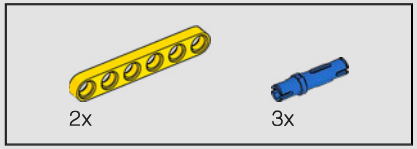

396

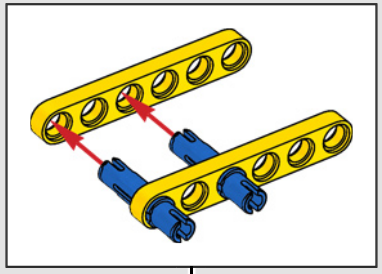

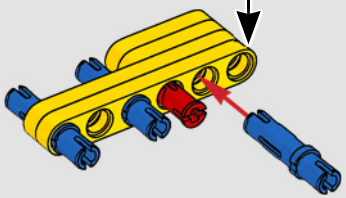

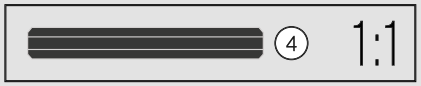

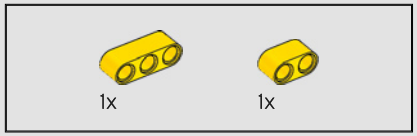

397

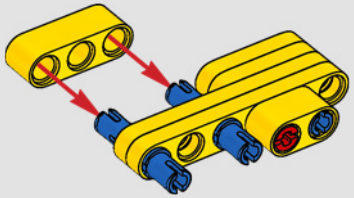

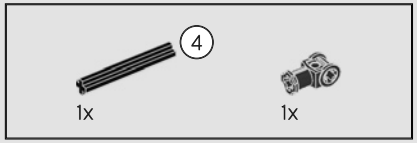

398

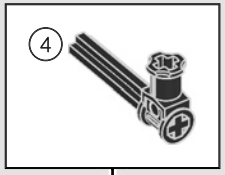

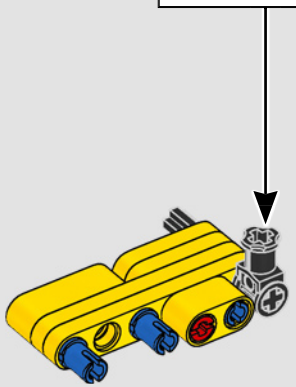

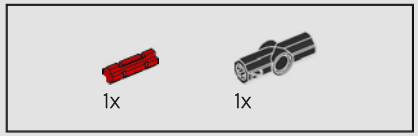

399

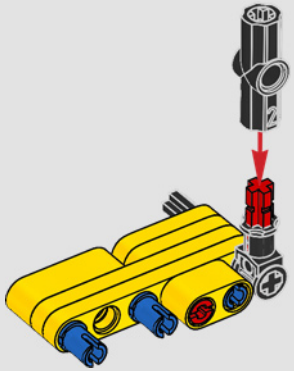

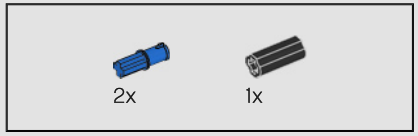

400

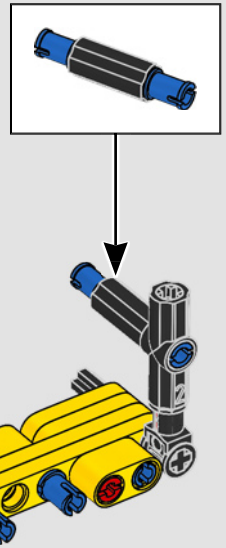

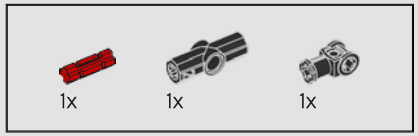

401

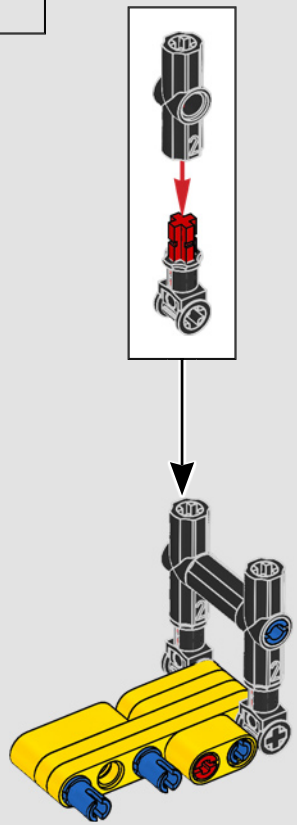

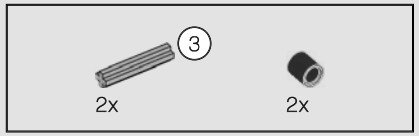

402

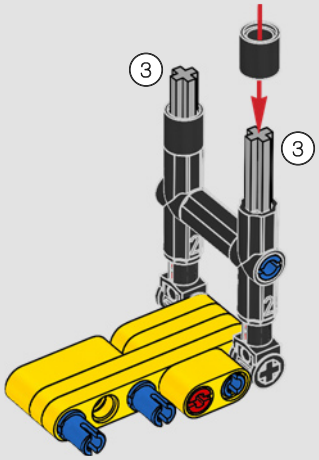

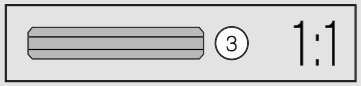

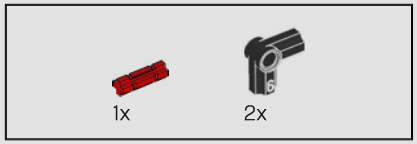

403

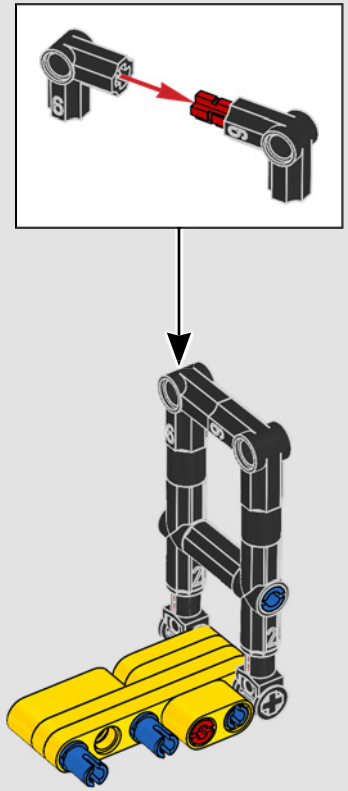

404

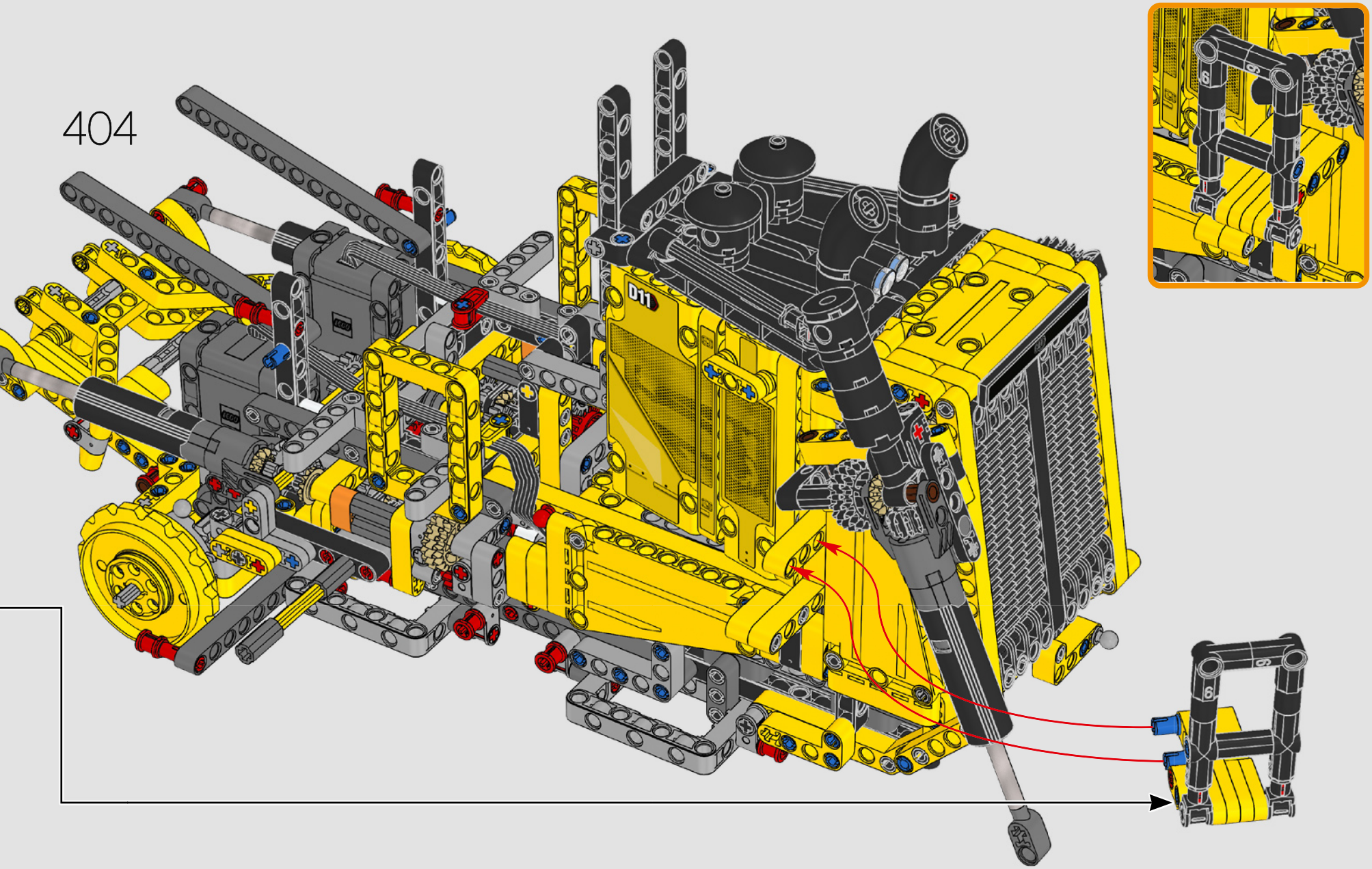

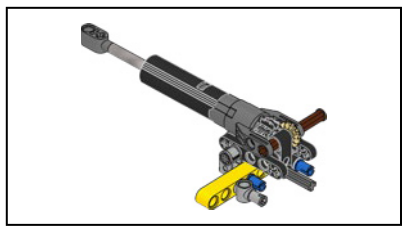

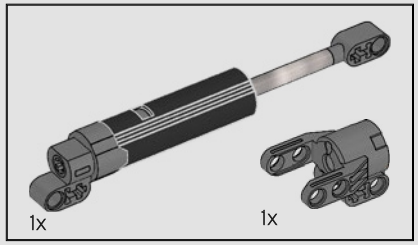

405

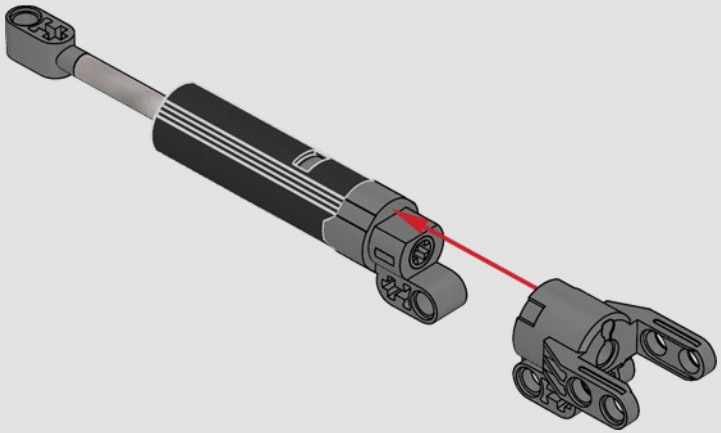

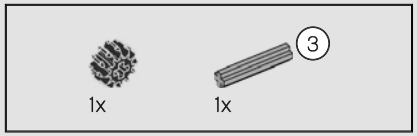

406

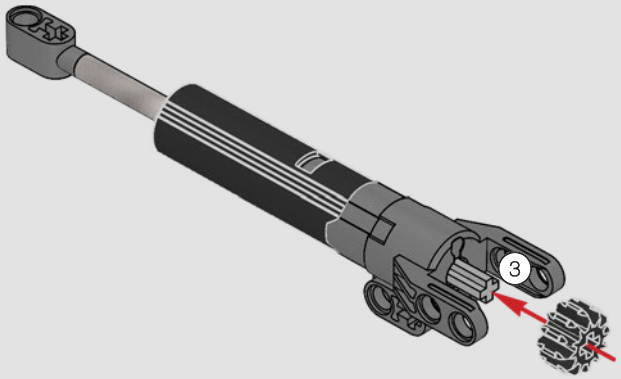

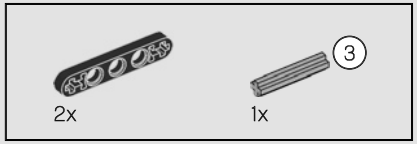

407

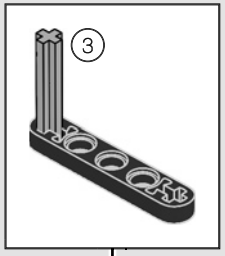

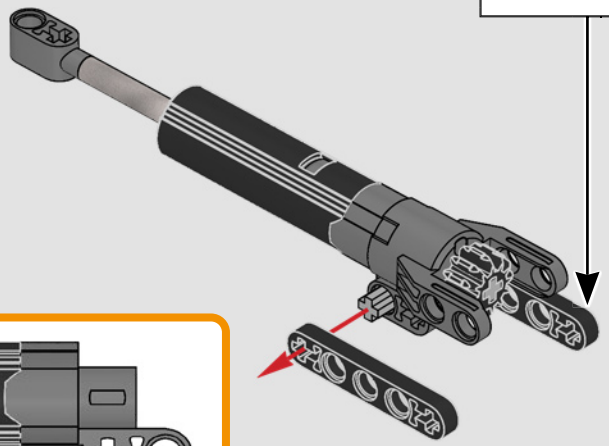

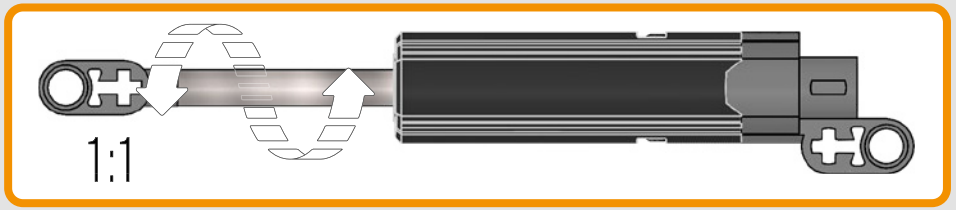

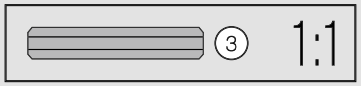

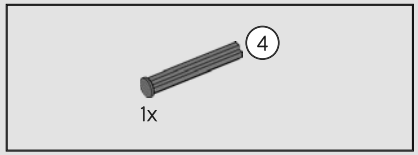

408

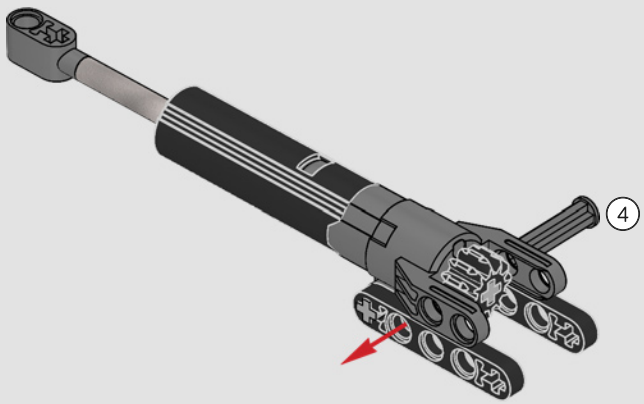

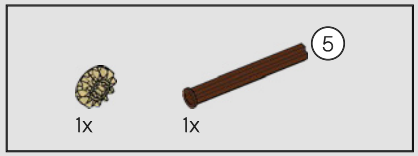

409

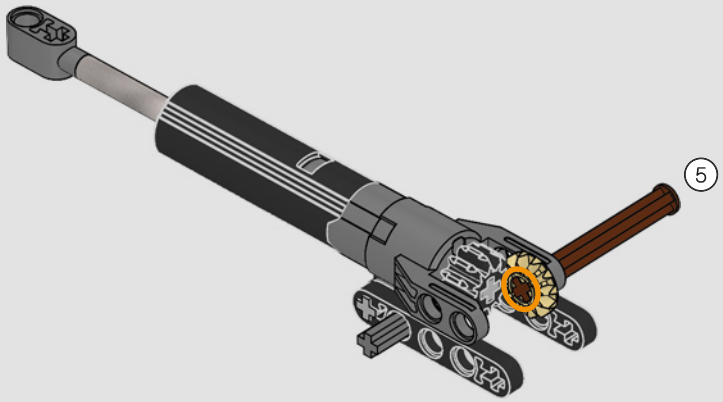

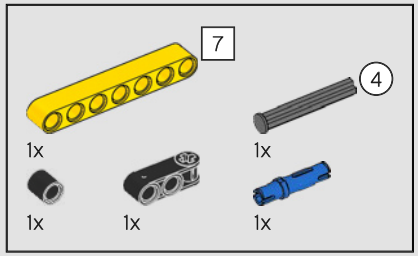

410

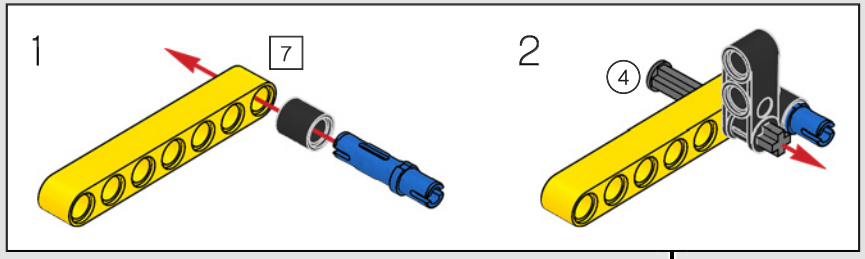

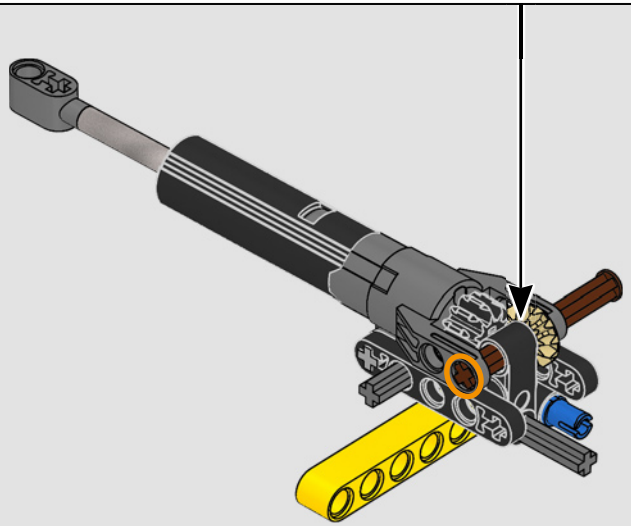

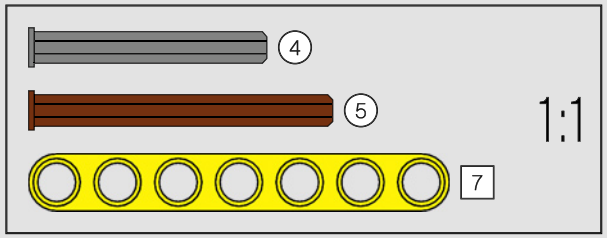

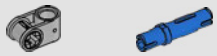

411

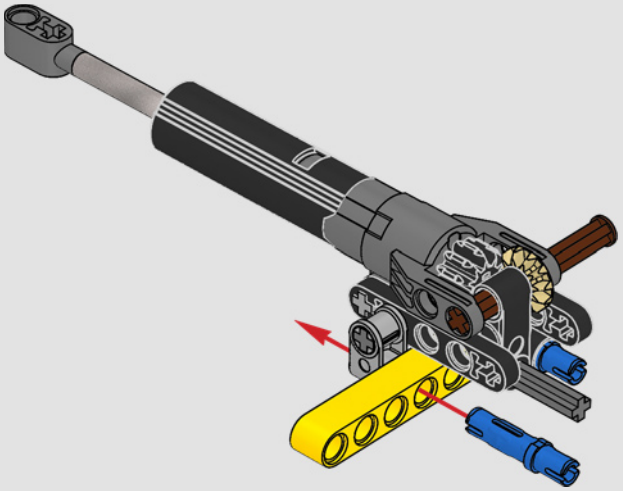

412

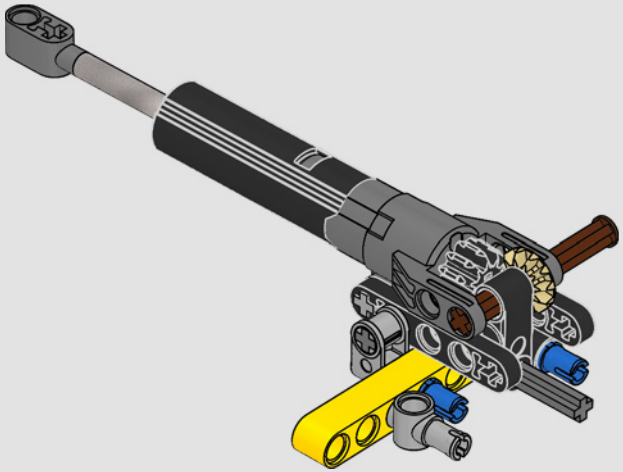

413

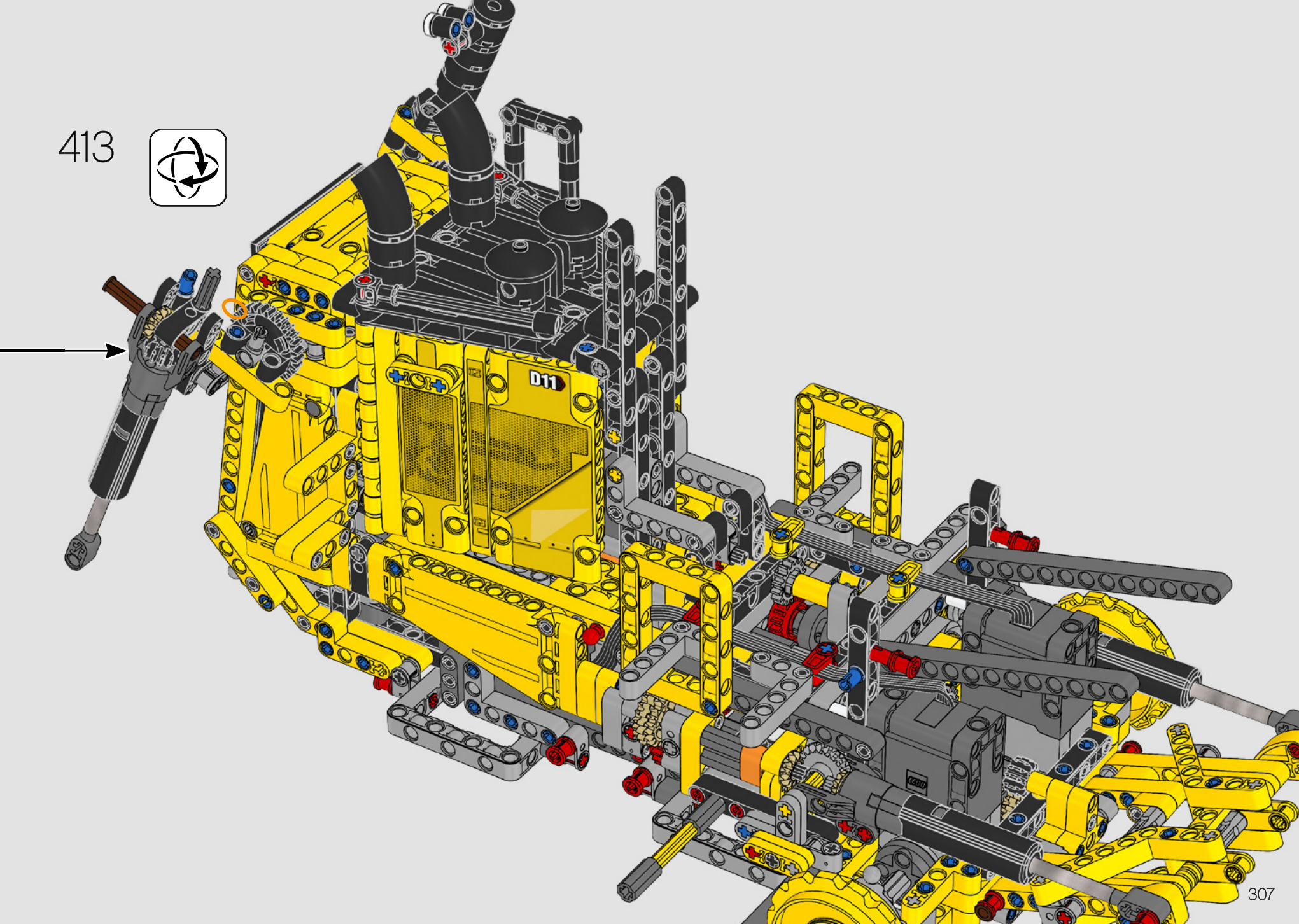

414

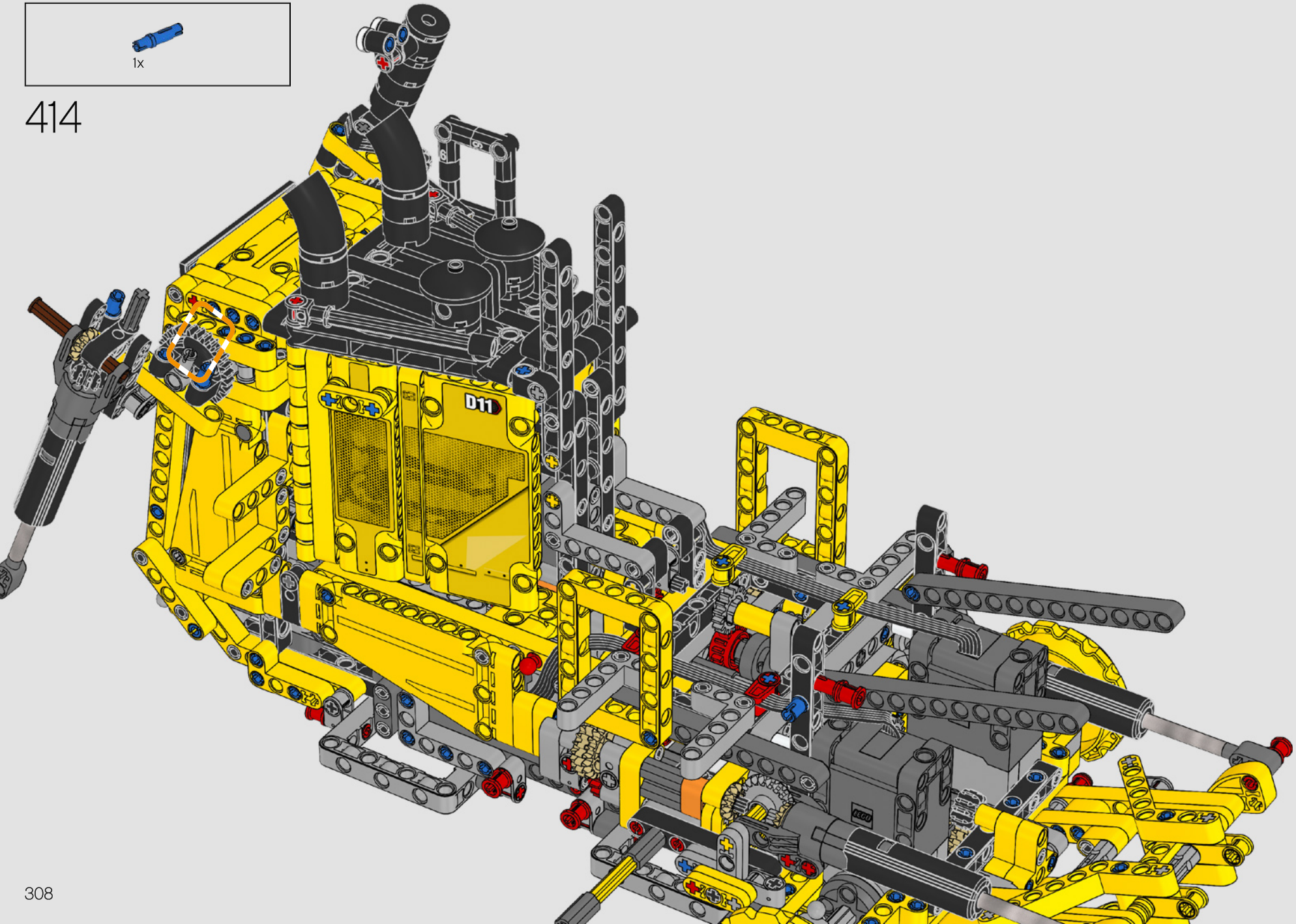

415

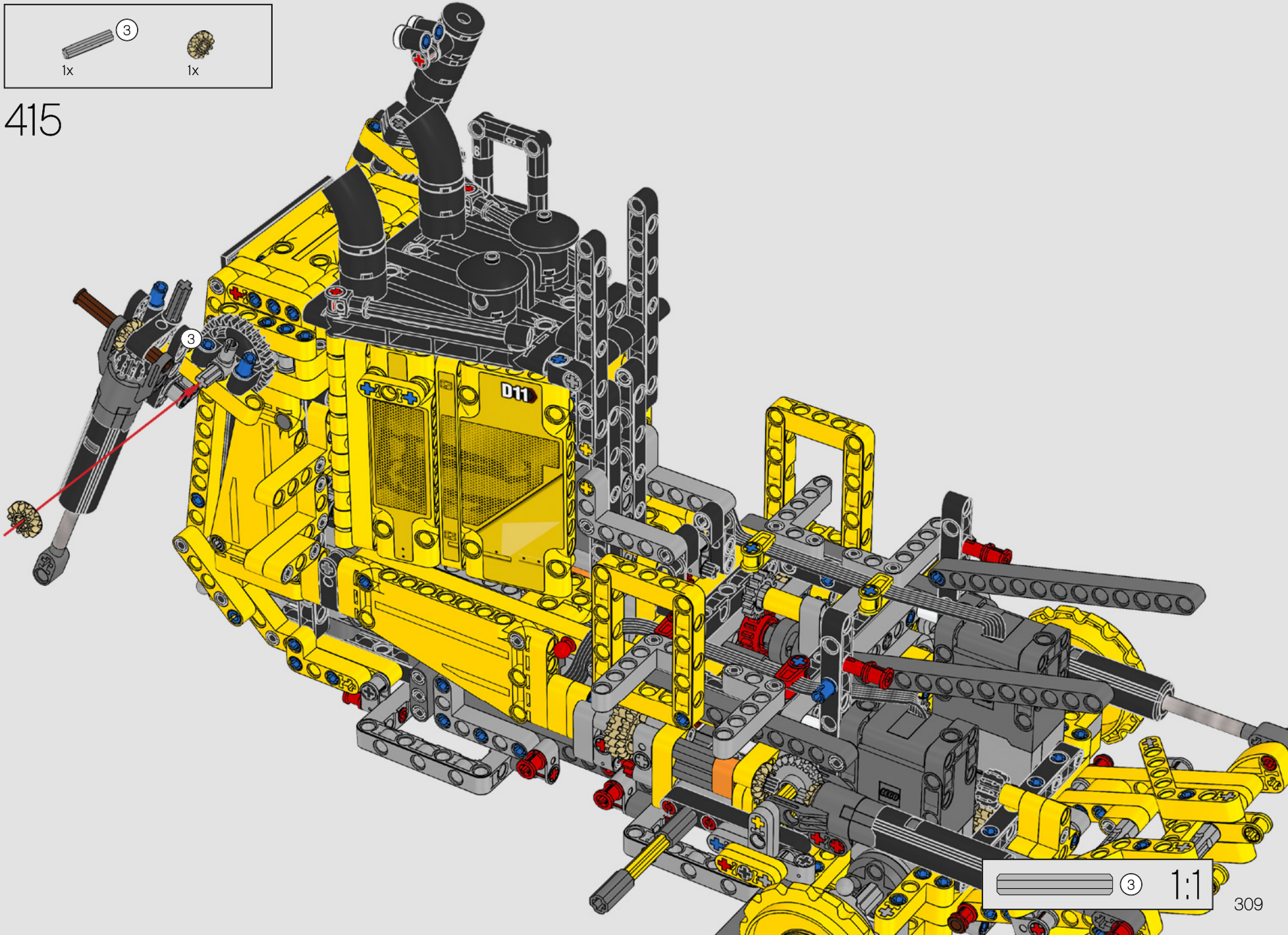

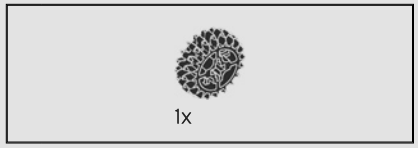

416

417

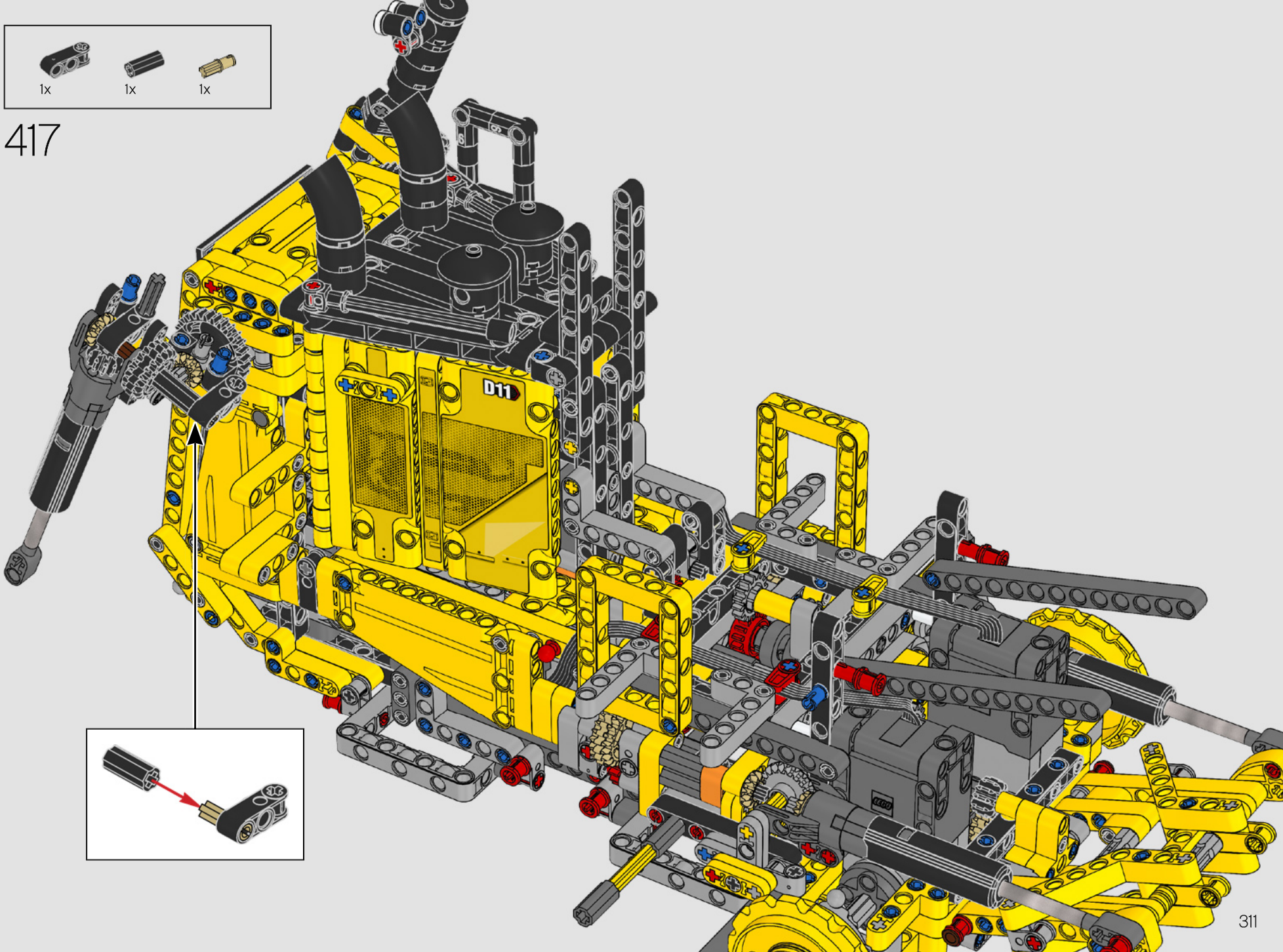

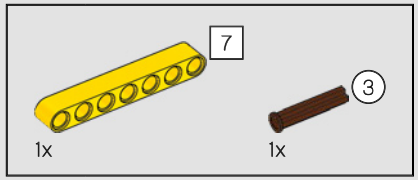

418

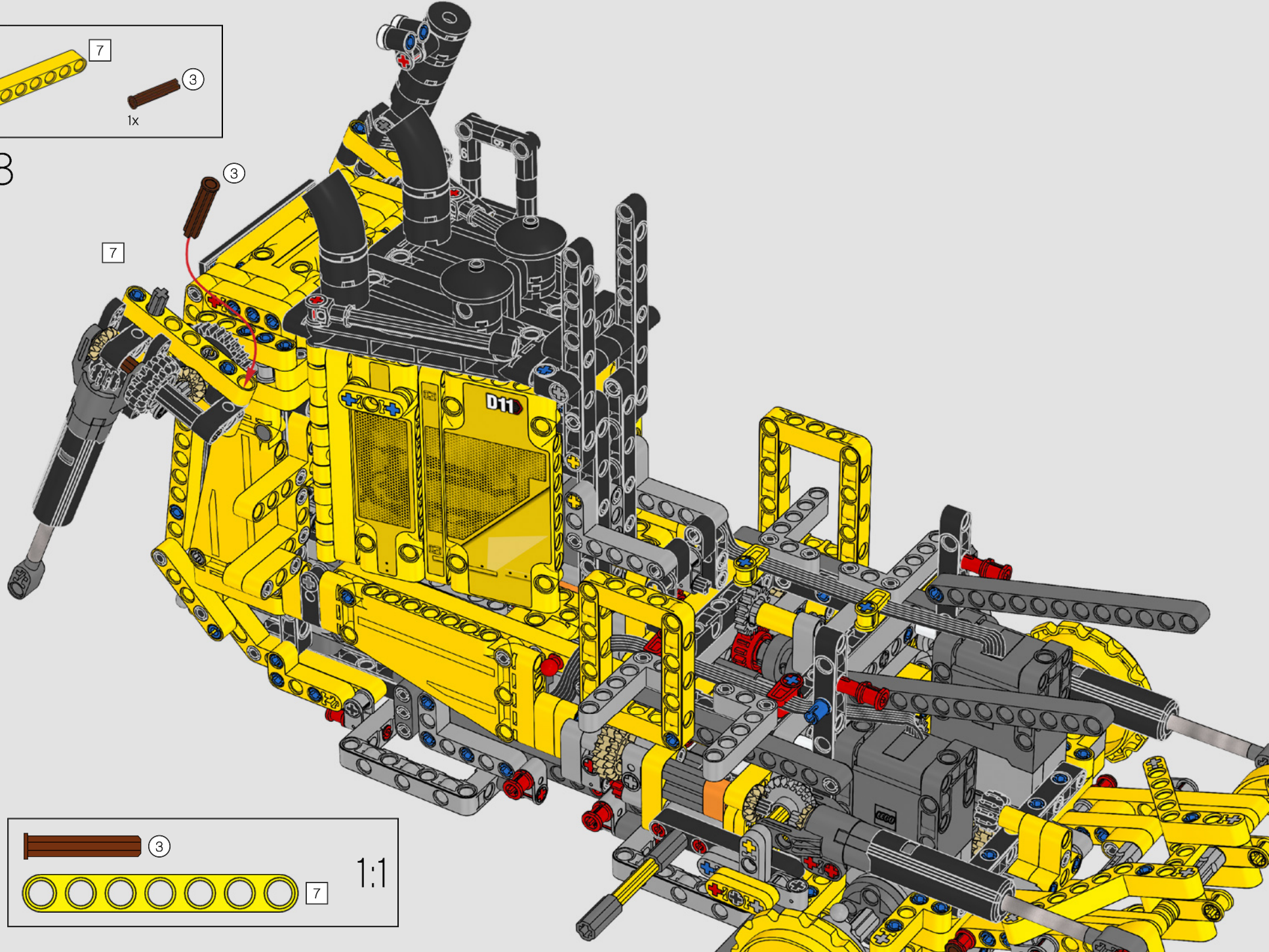

419

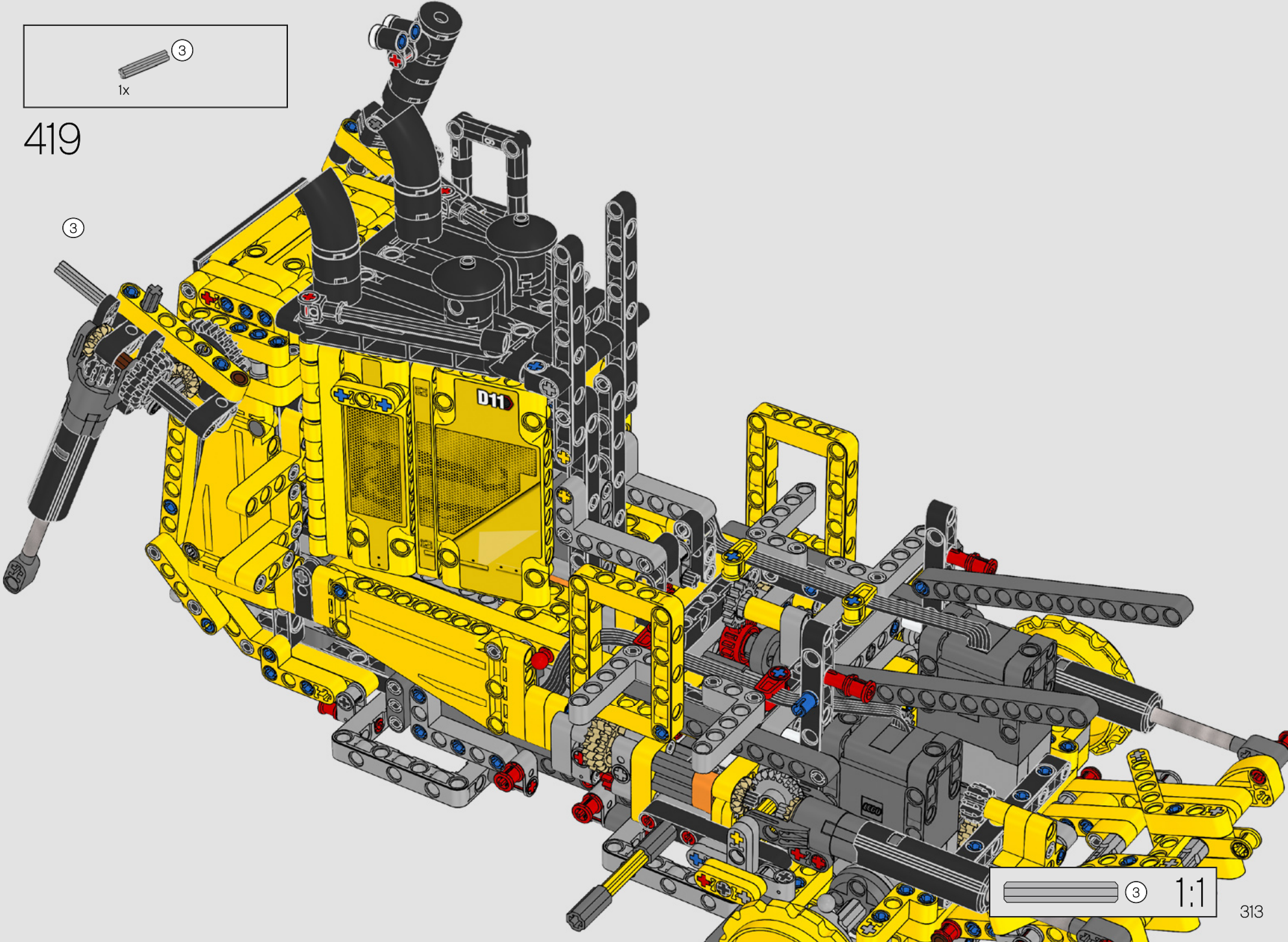

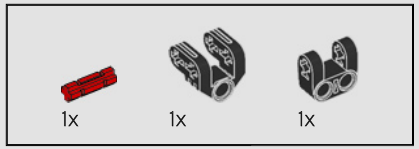

420

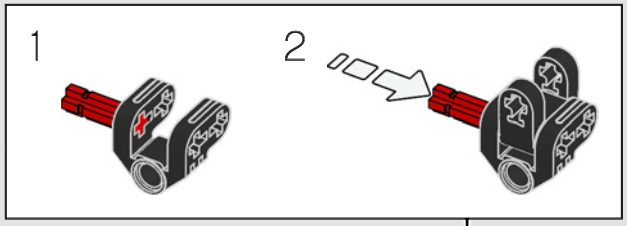

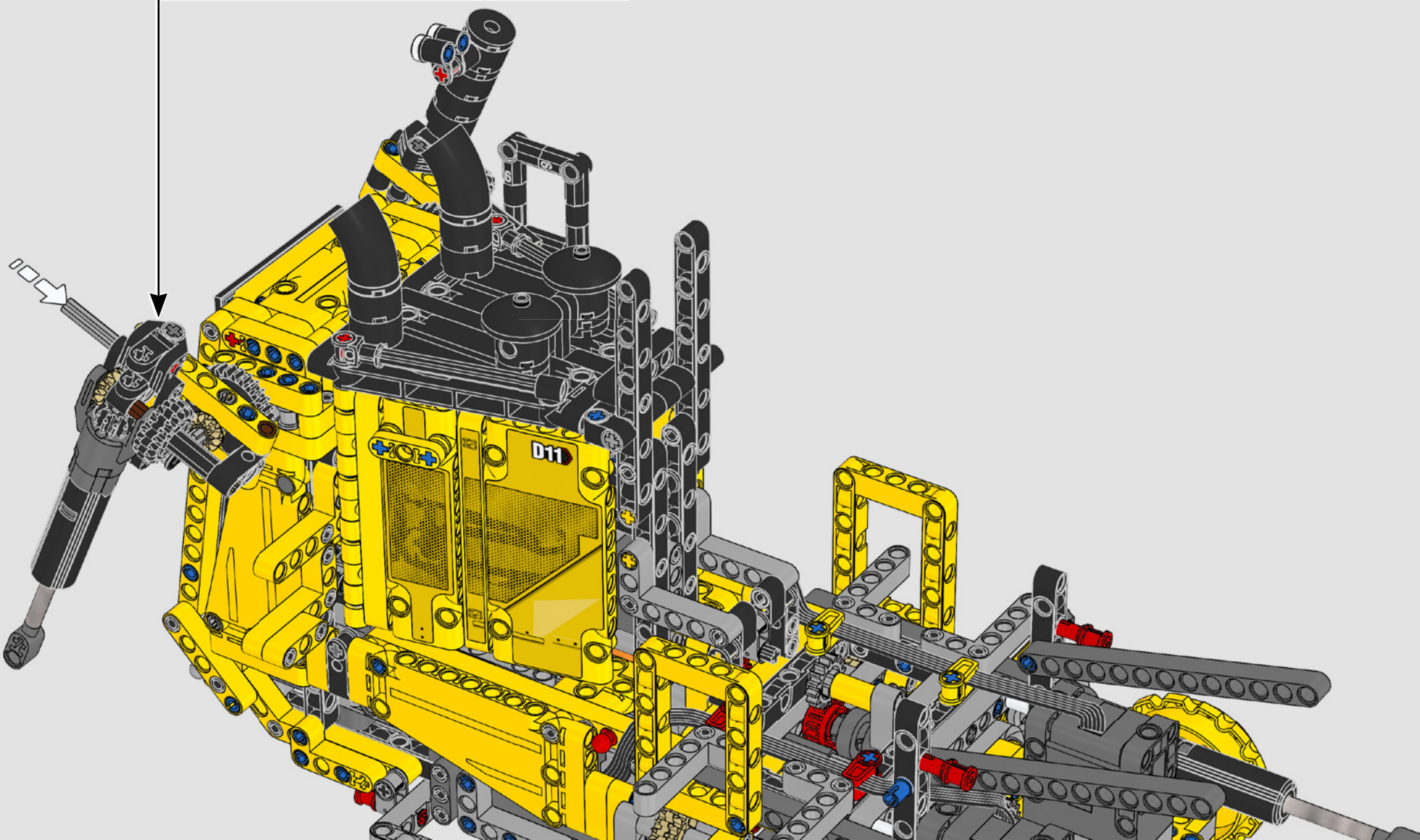

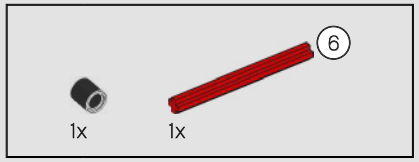

421

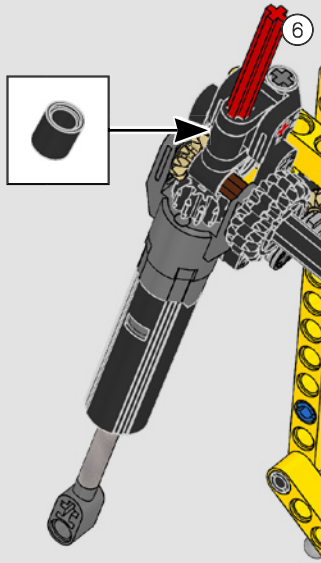

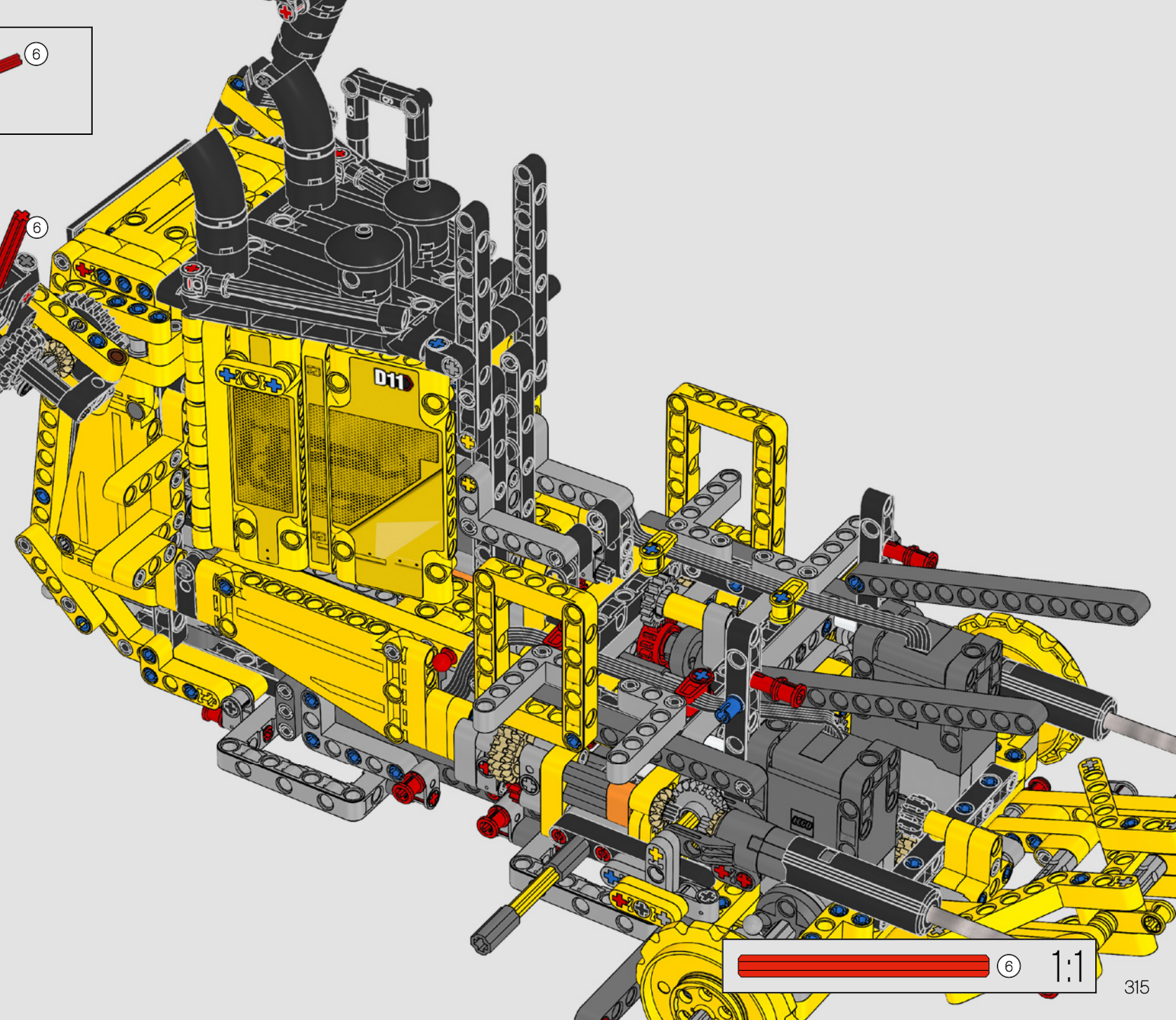

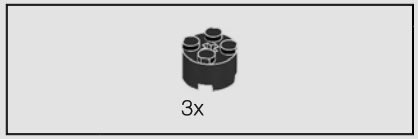

422

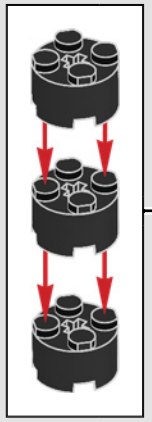

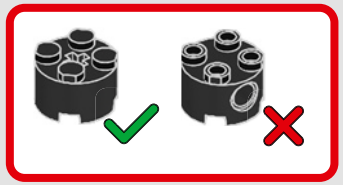

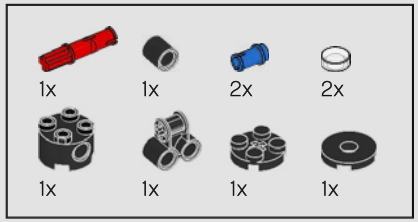

423

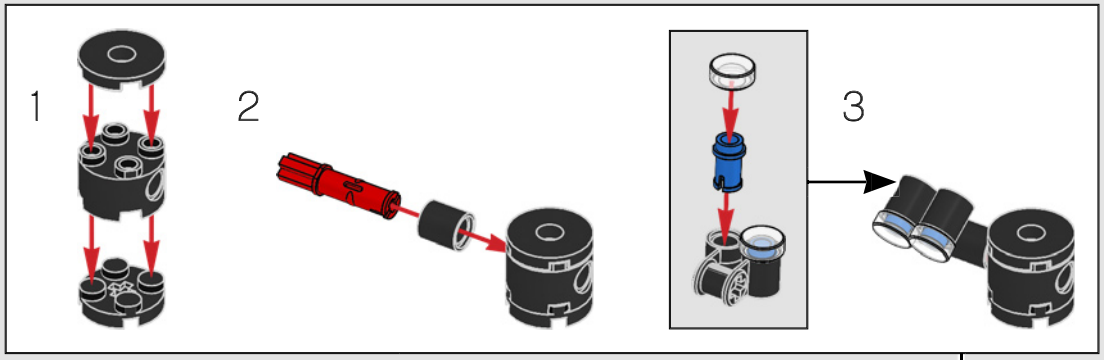

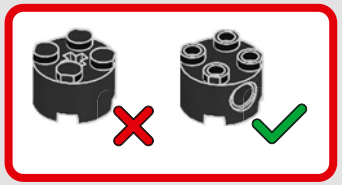

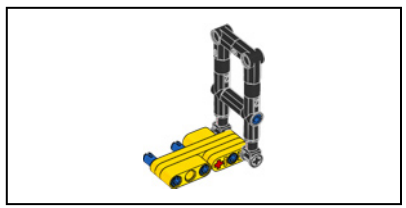

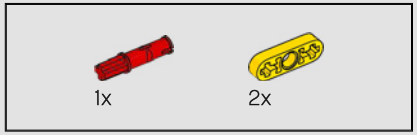

424

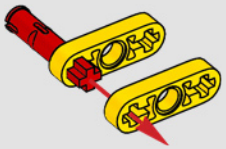

425

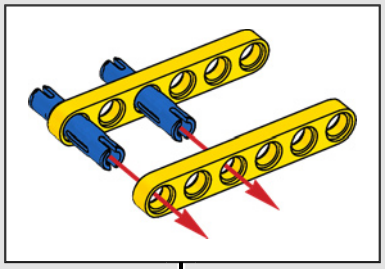

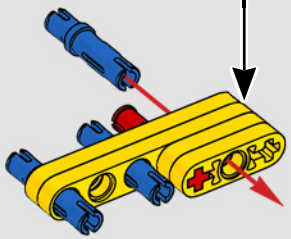

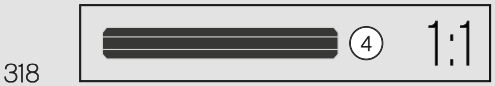

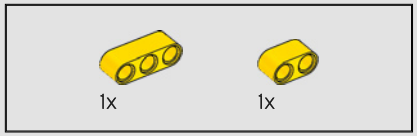

426

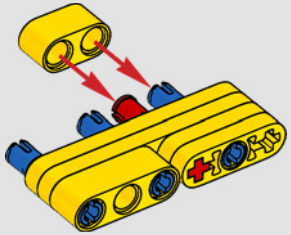

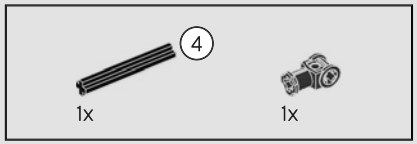

427

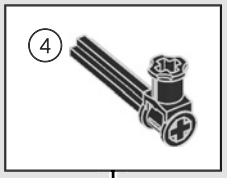

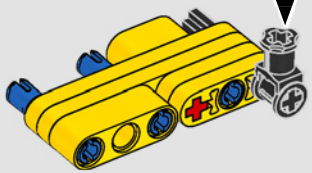

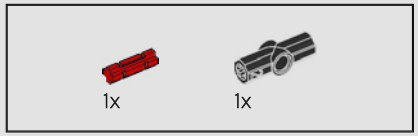

428

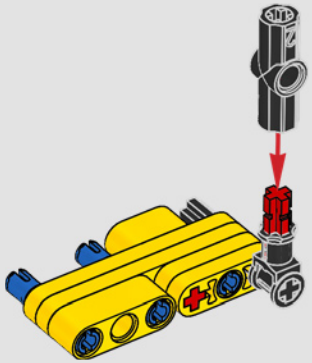

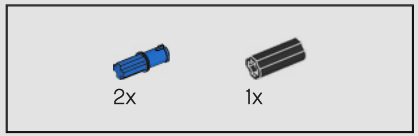

429

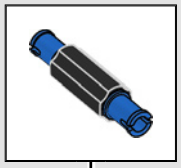

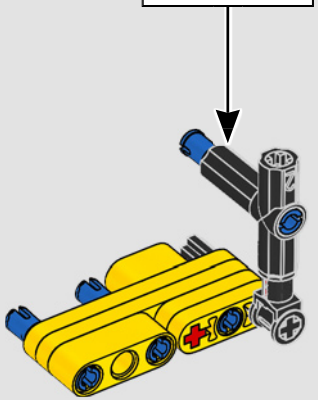

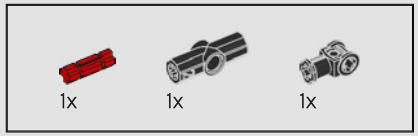

430

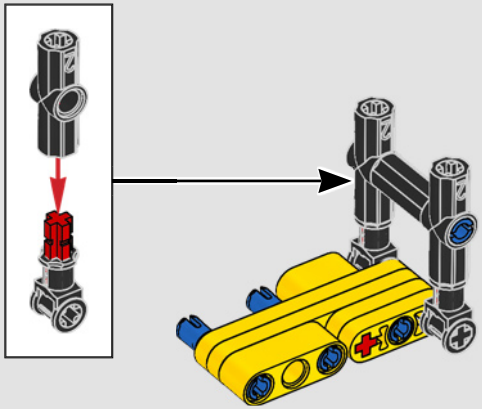

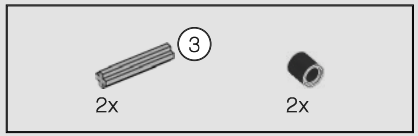

431

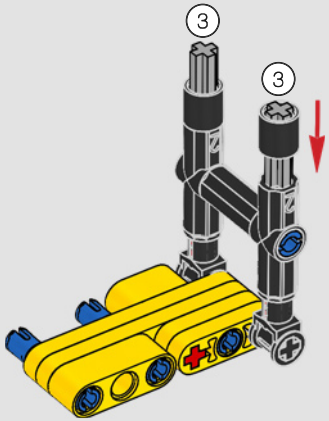

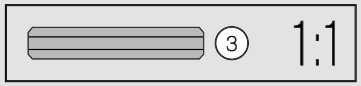

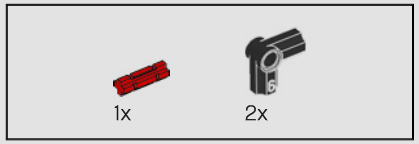

432

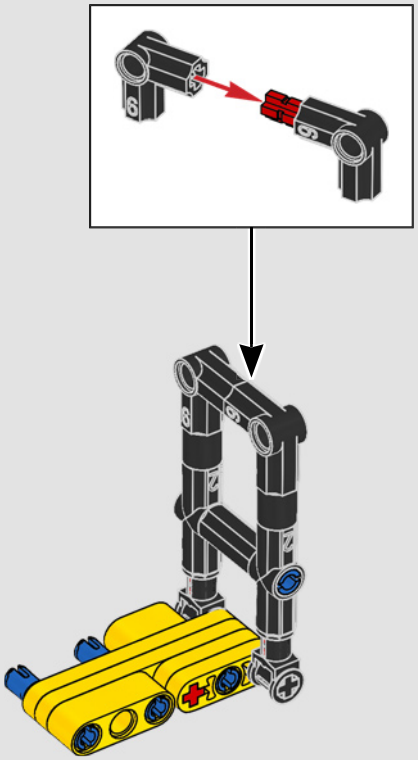

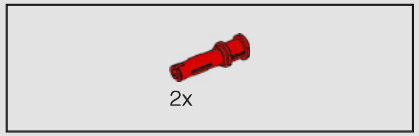

433

4

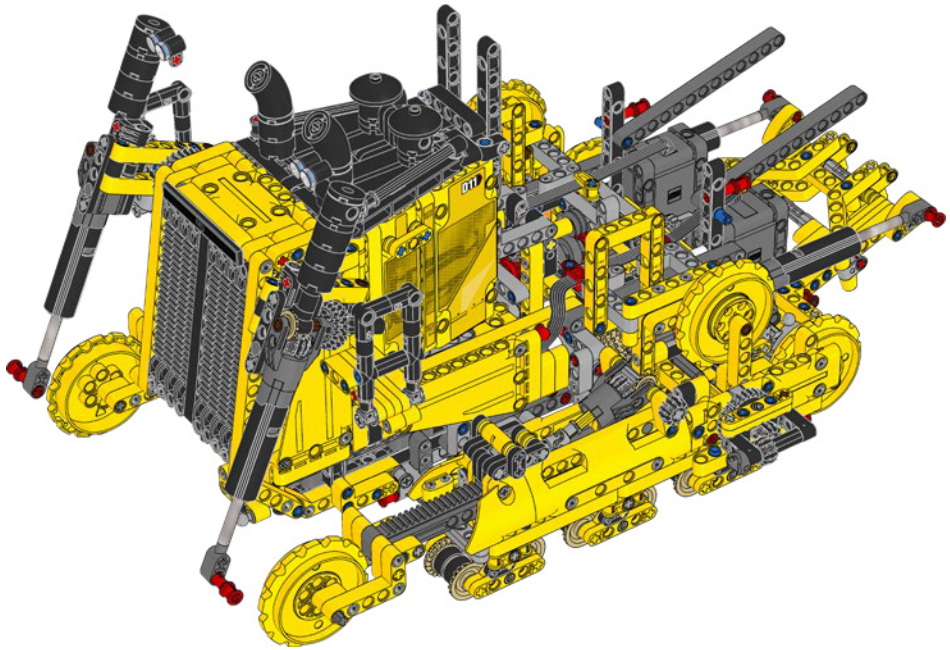

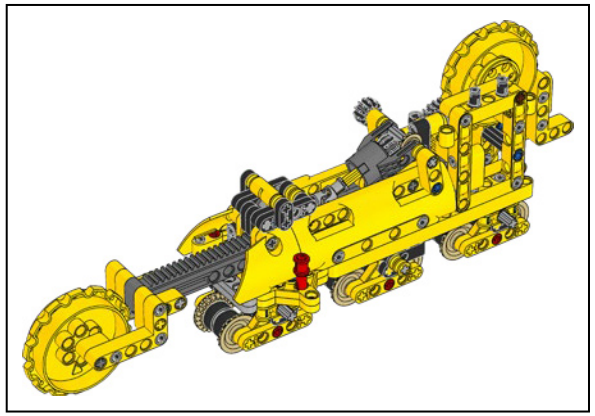

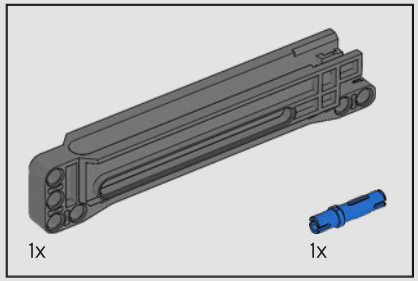

434

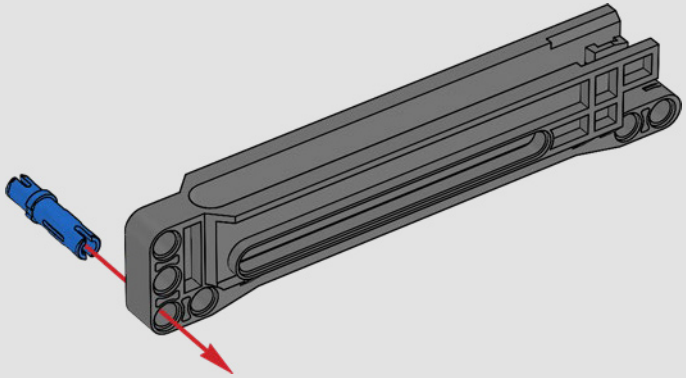

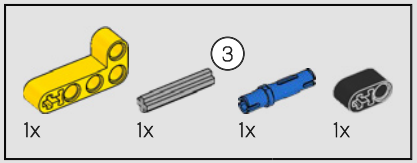

435

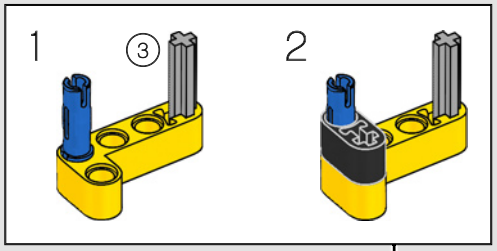

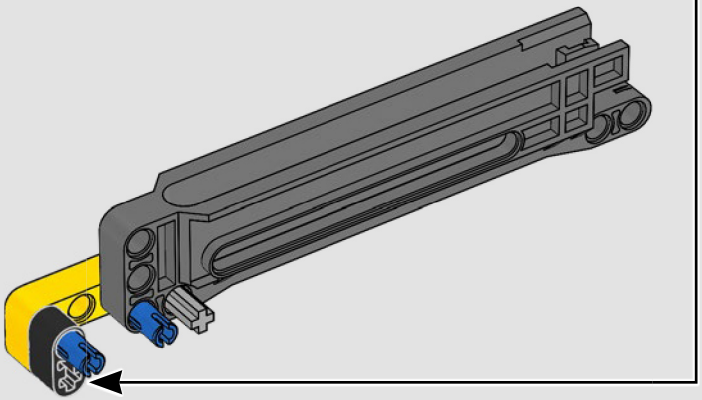

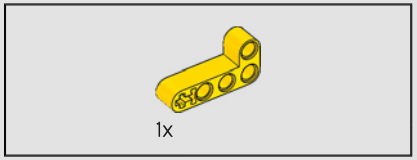

436

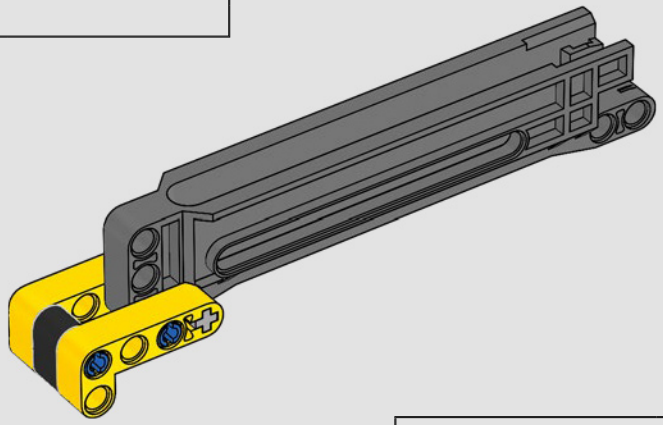

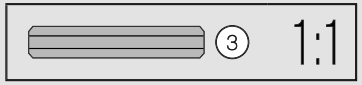

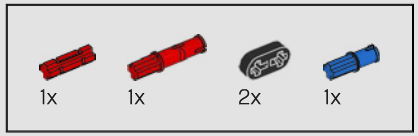

437

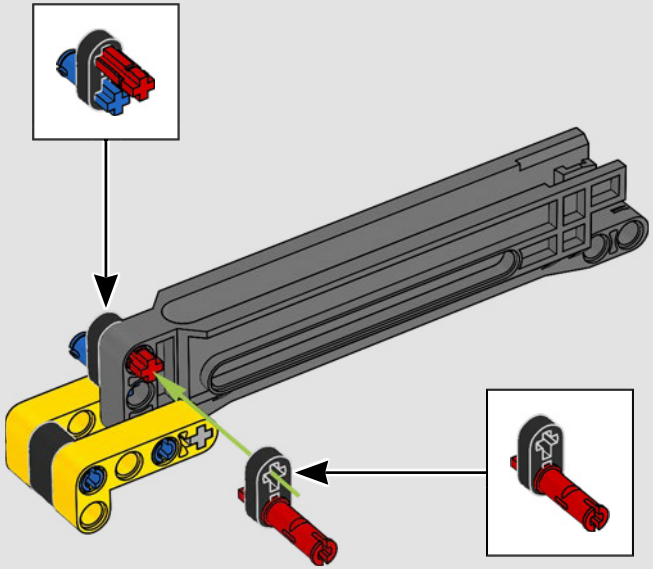

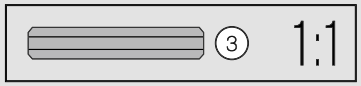

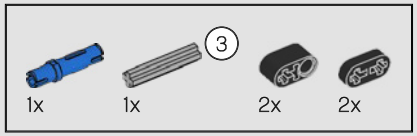

438

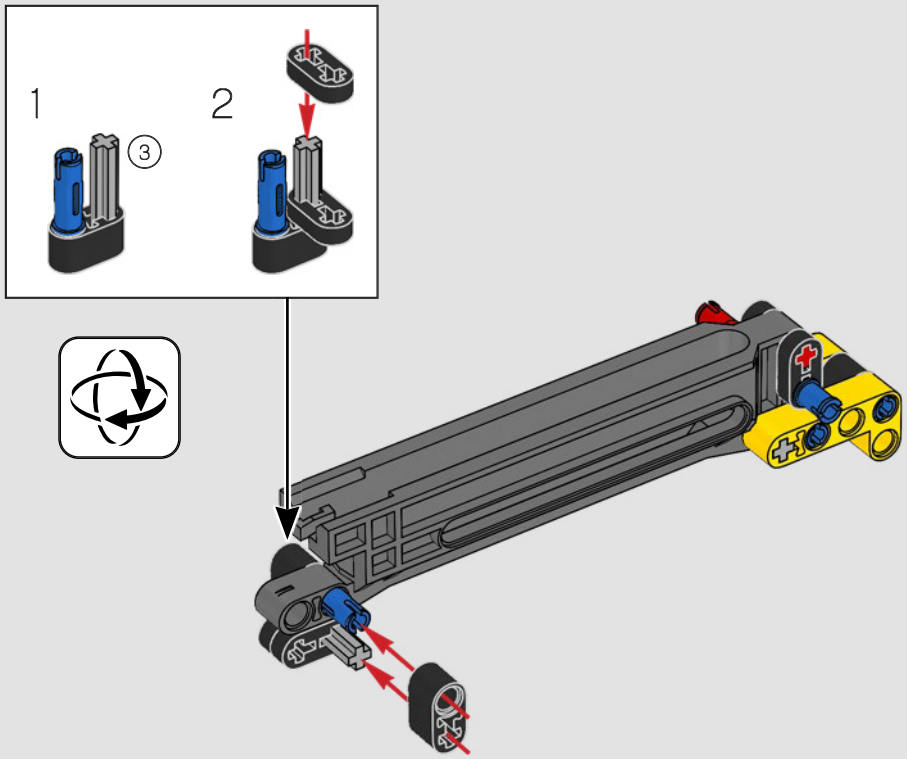

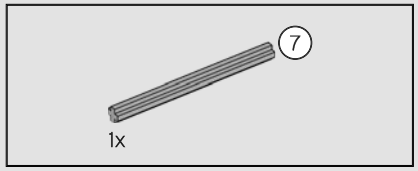

439

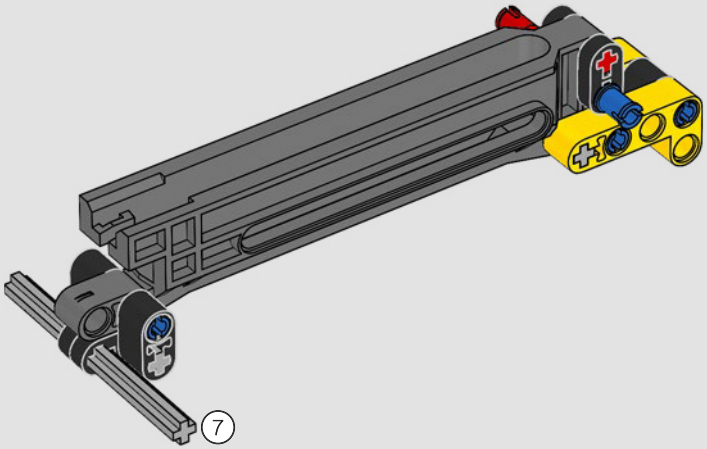

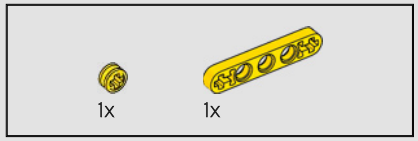

440

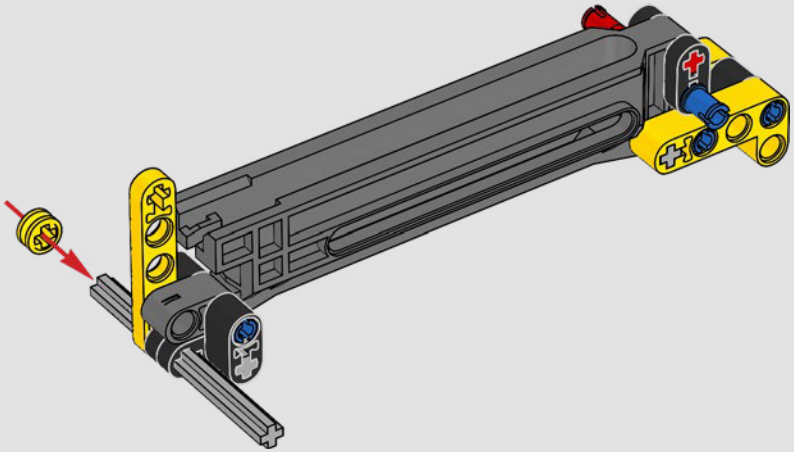

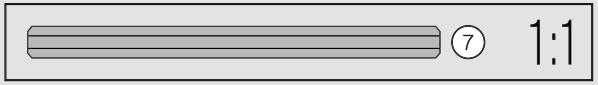

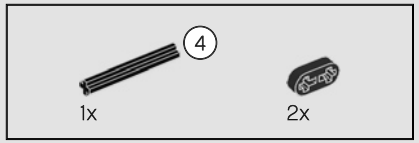

441

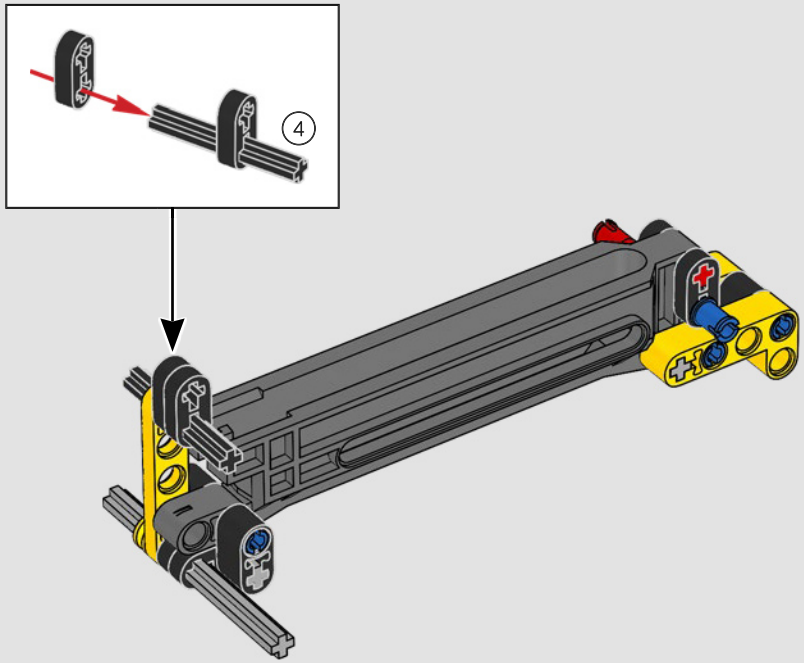

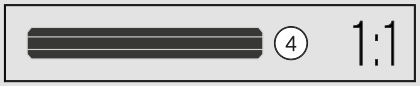

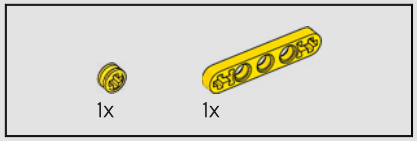

442

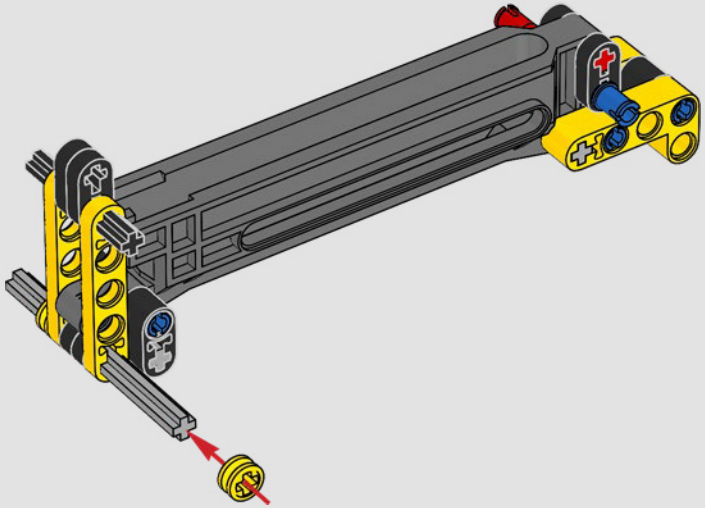

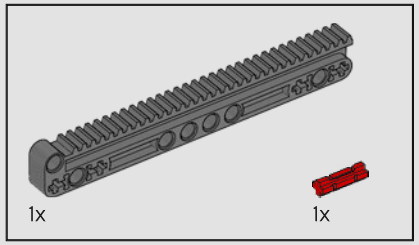

443

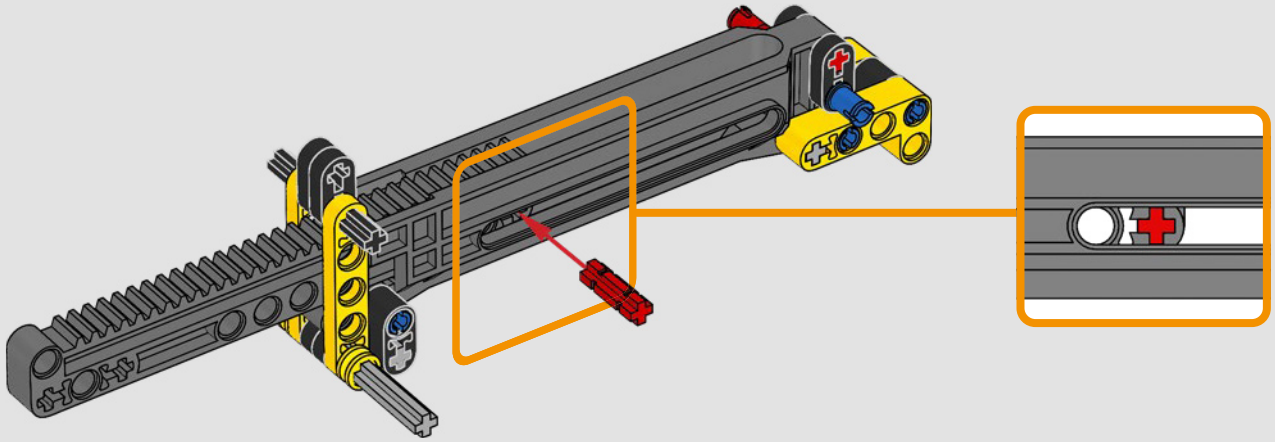

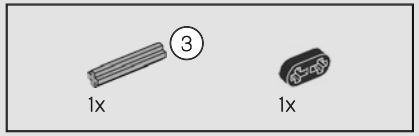

444

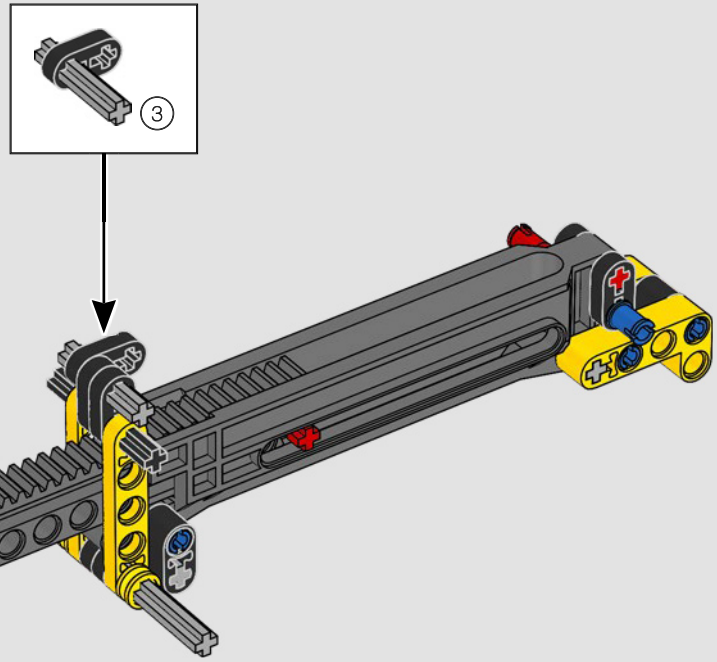

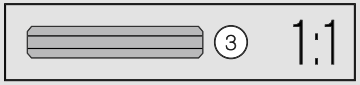

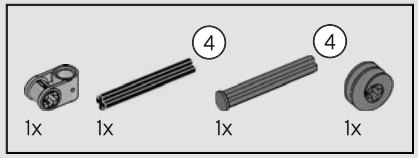

445

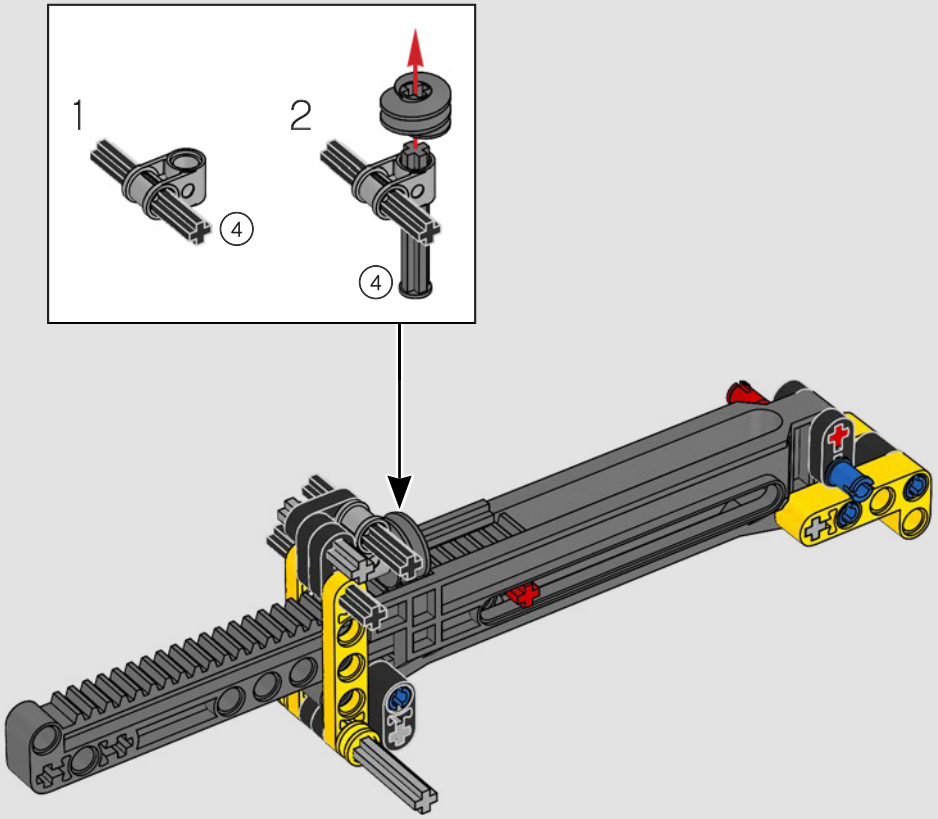

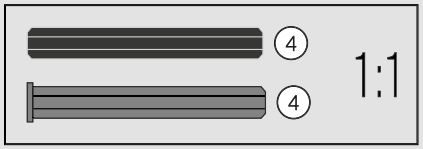

1x

446

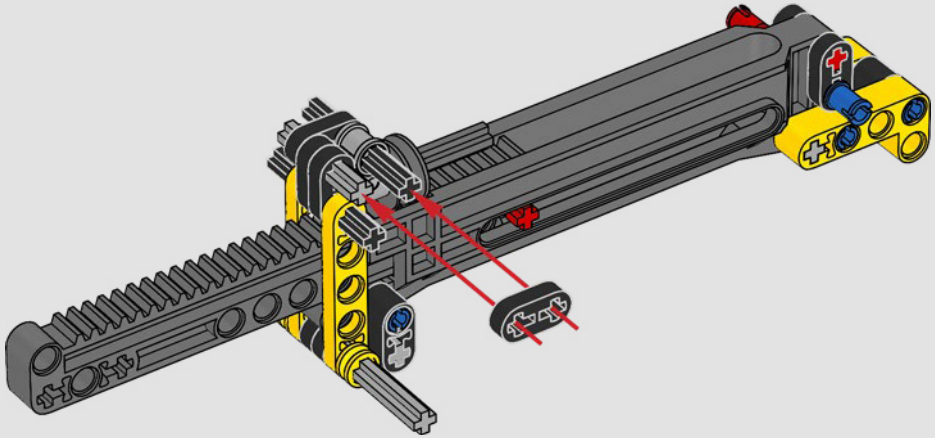

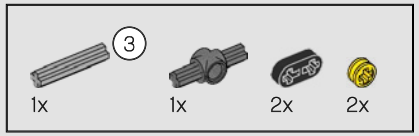

447

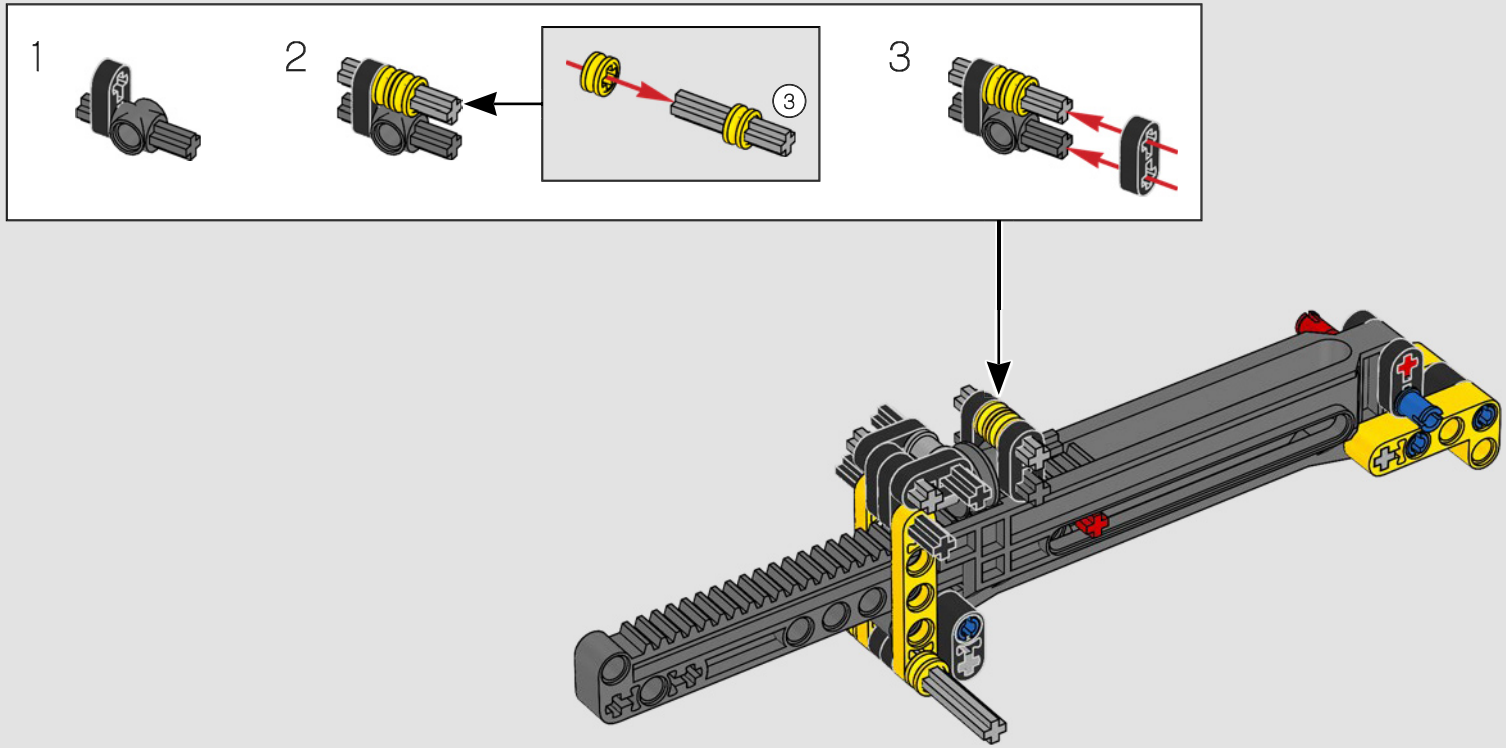

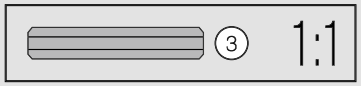

448

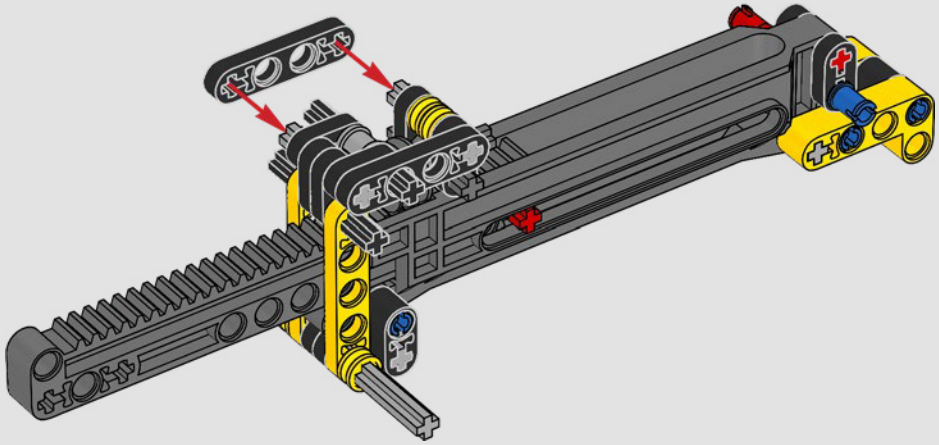

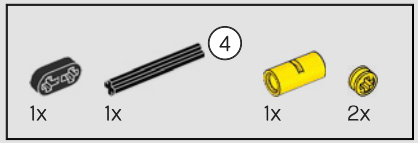

449

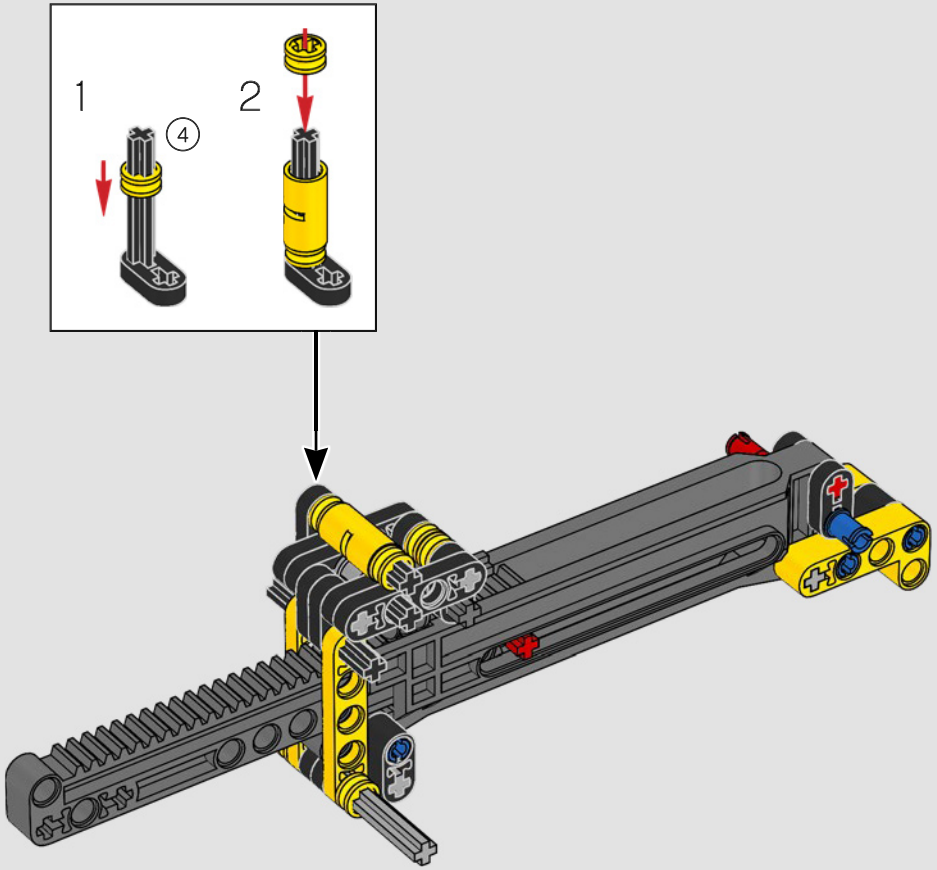

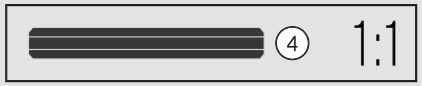

1x

450

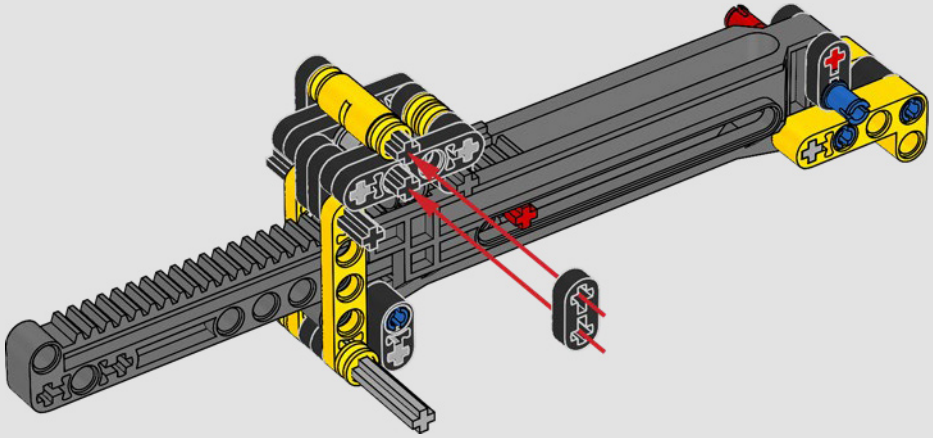

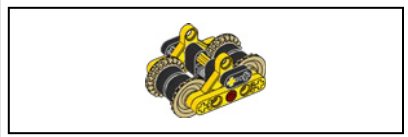

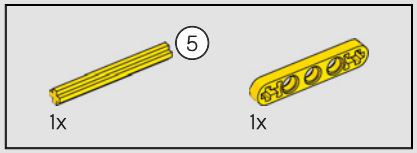

451

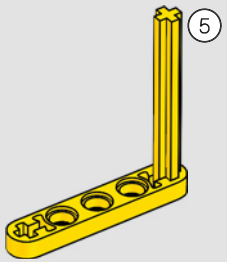

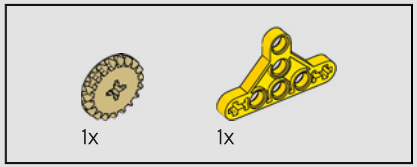

452

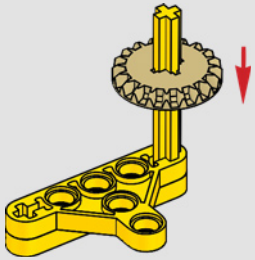

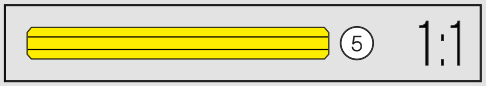

453

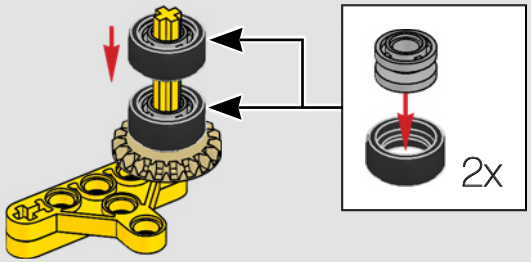

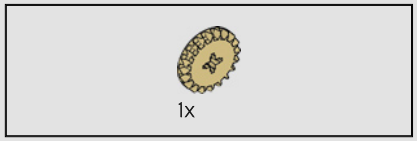

454

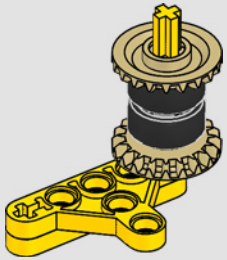

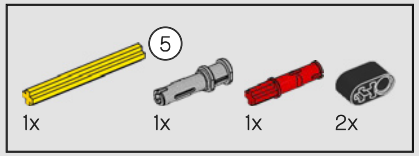

455

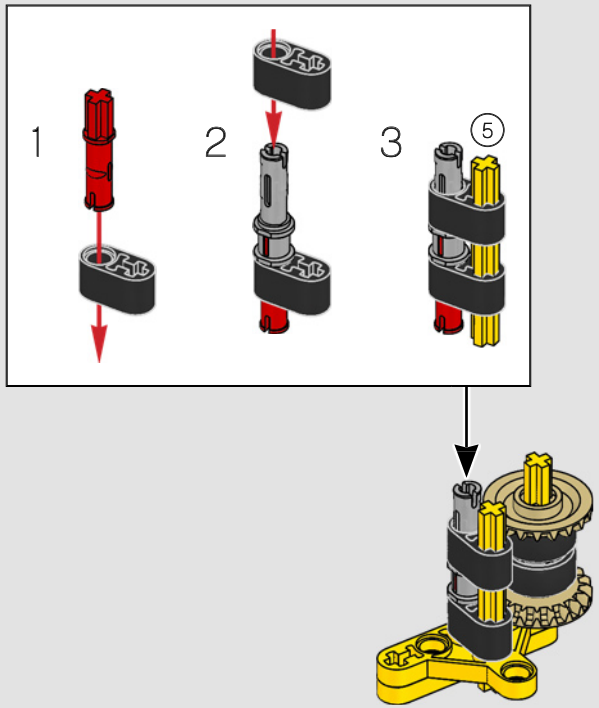

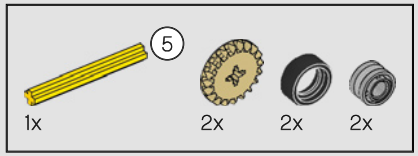

456

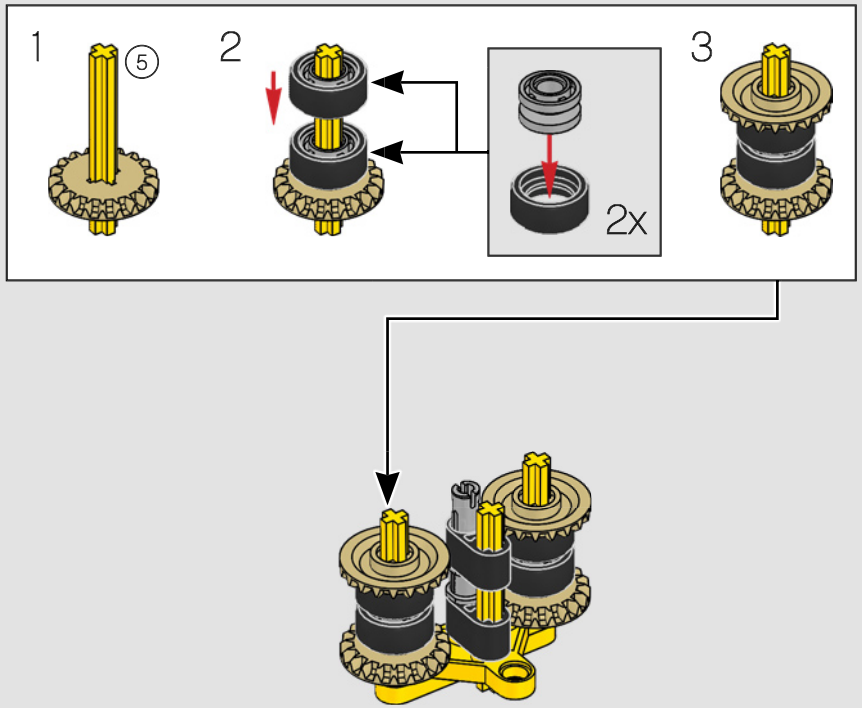

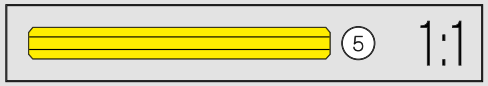

457

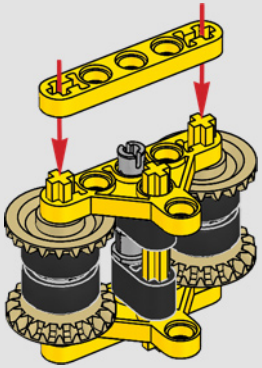

458

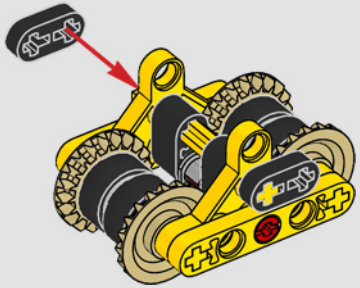

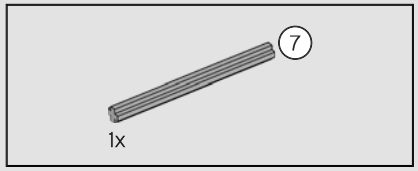

459

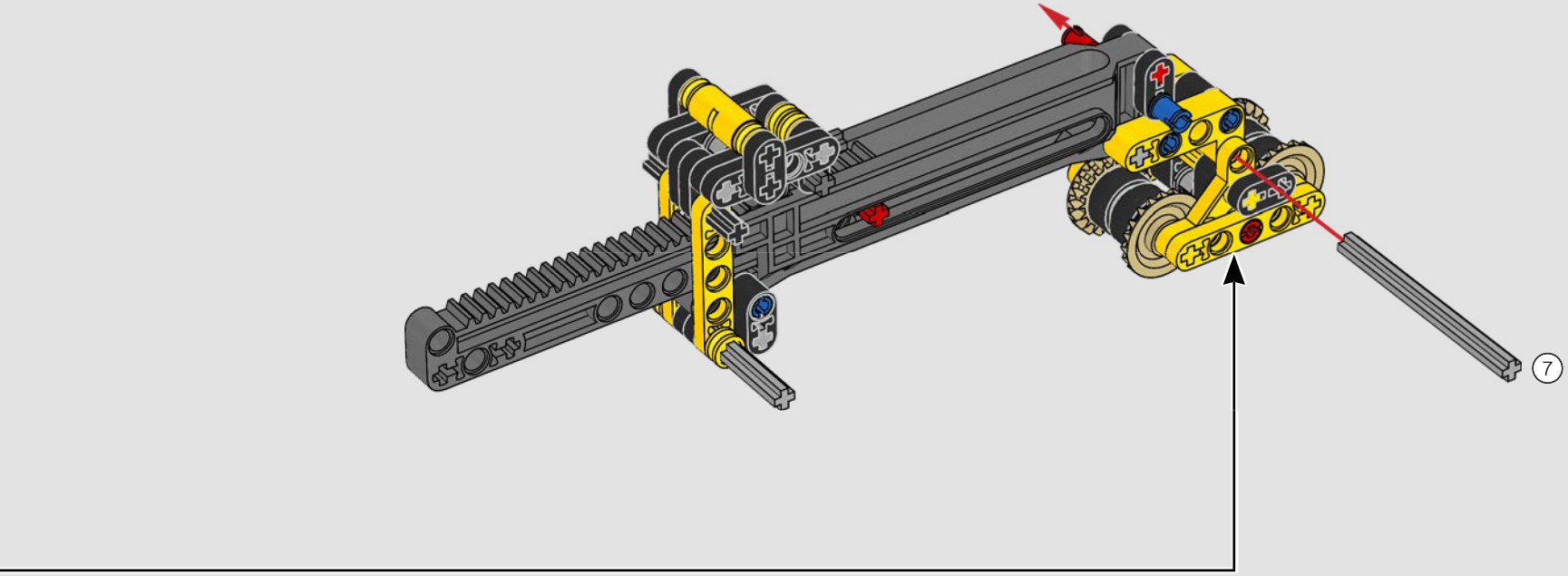

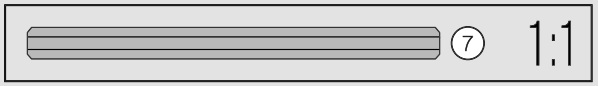

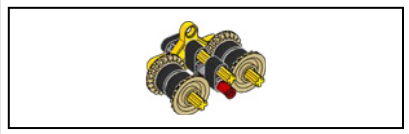

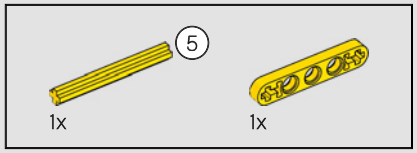

460

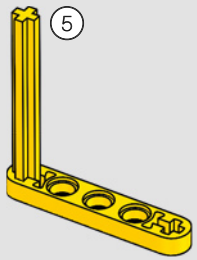

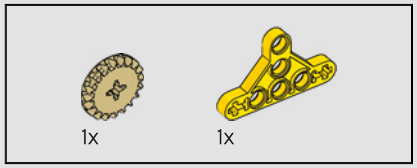

461

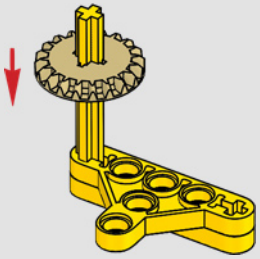

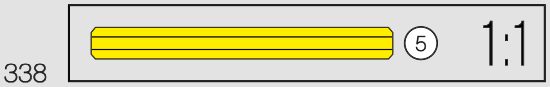

462

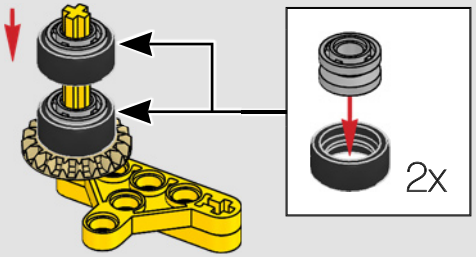

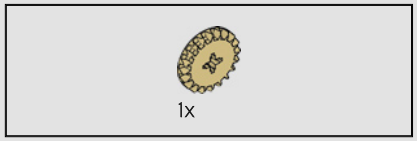

463

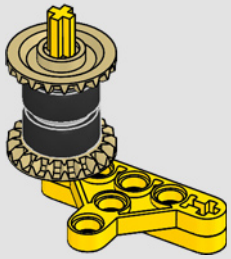

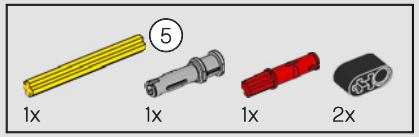

464

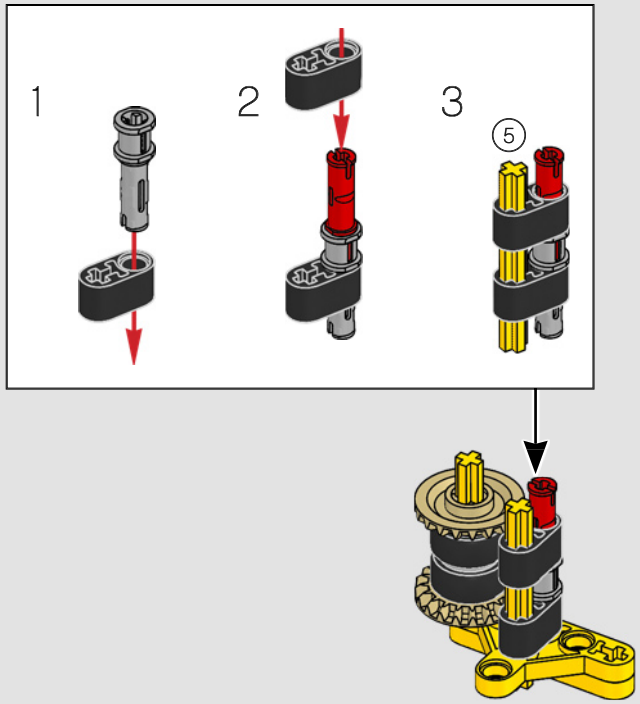

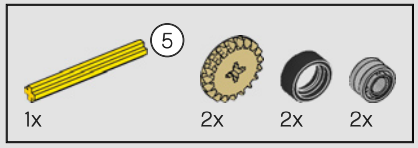

465

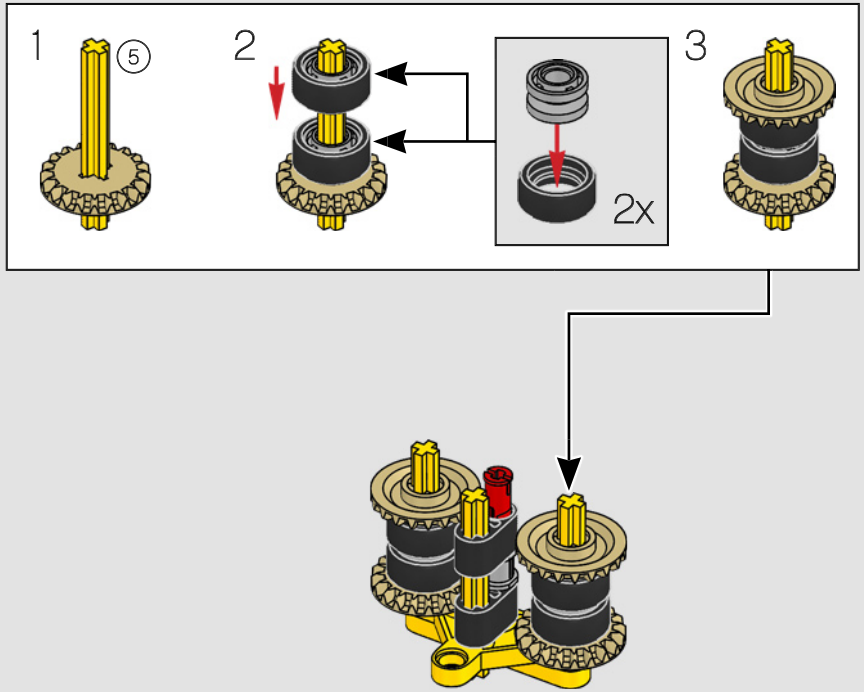

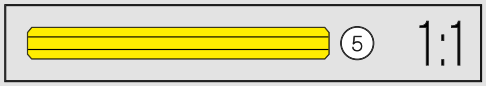

1x

466

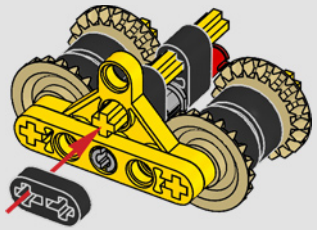

467

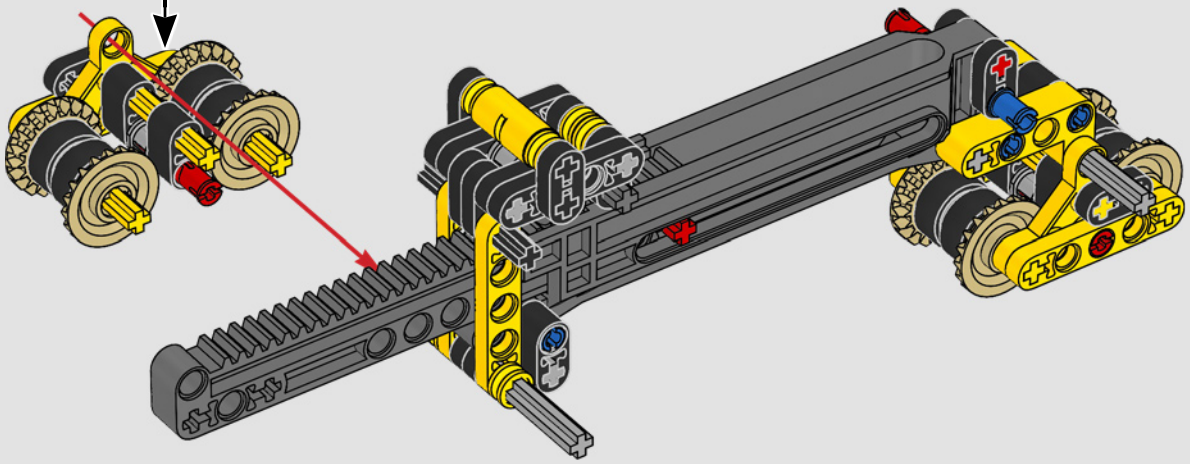

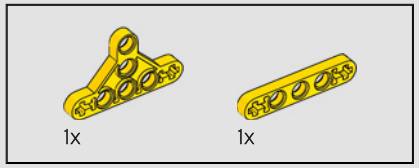

468

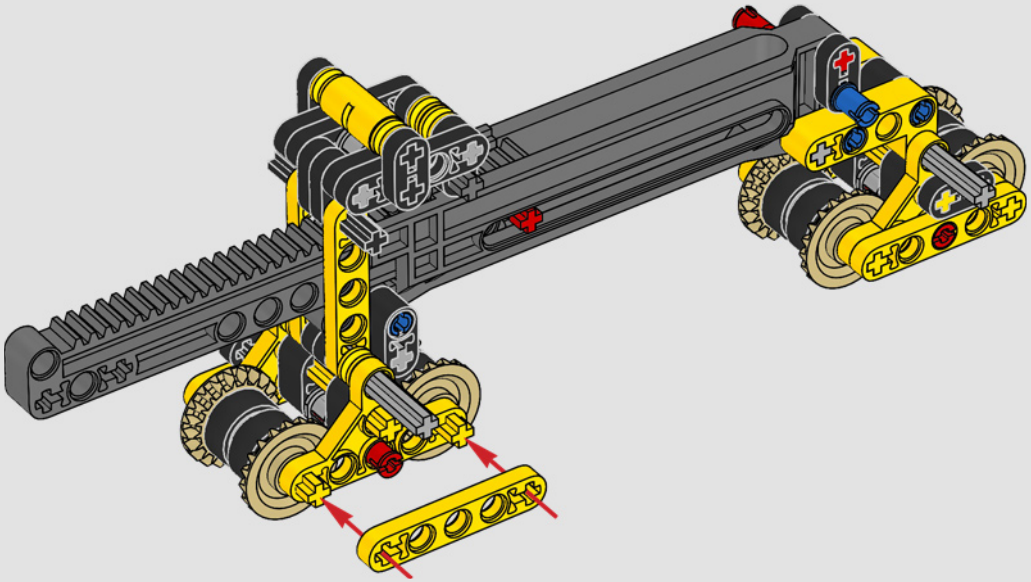

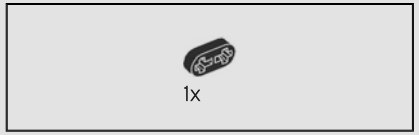

469

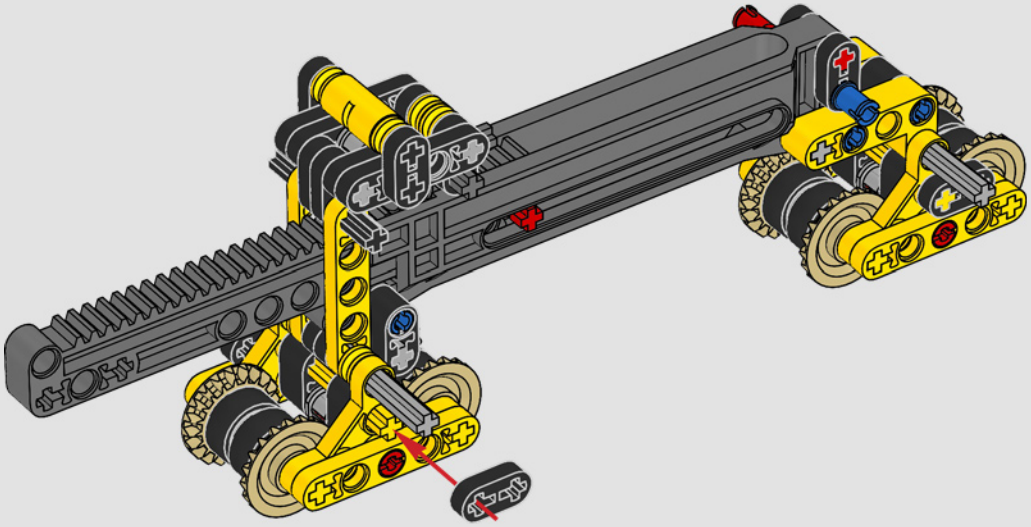

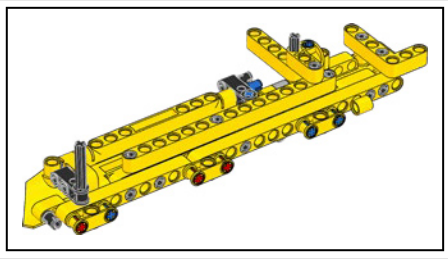

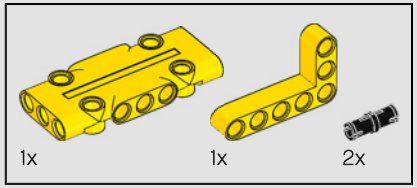

470

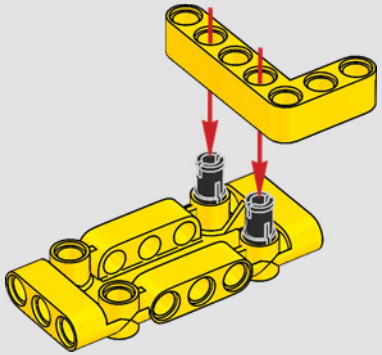

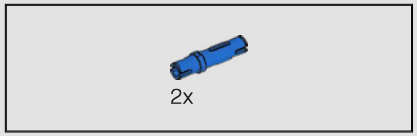

471

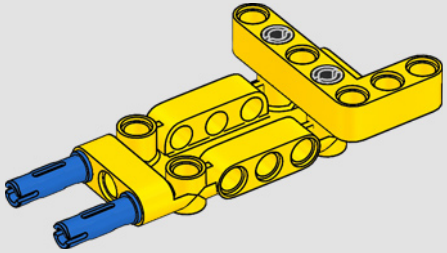

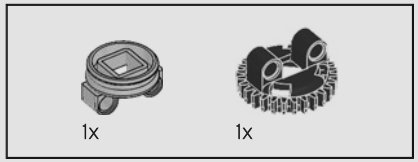

472

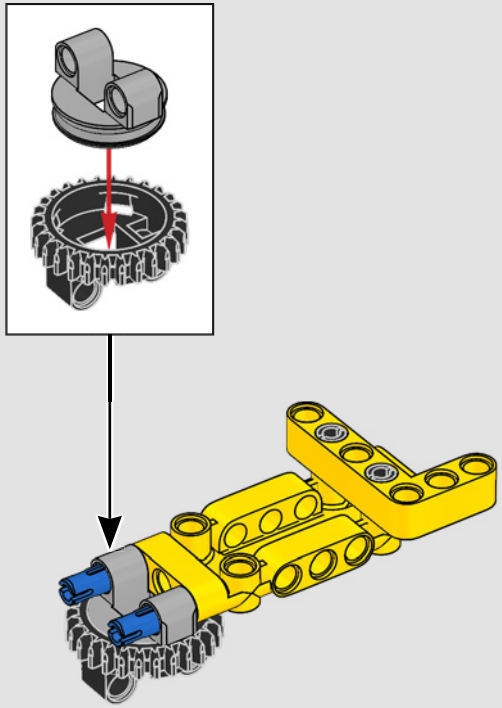

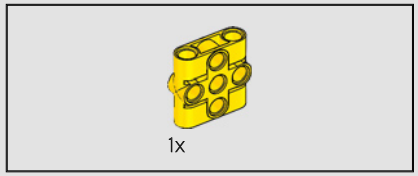

473

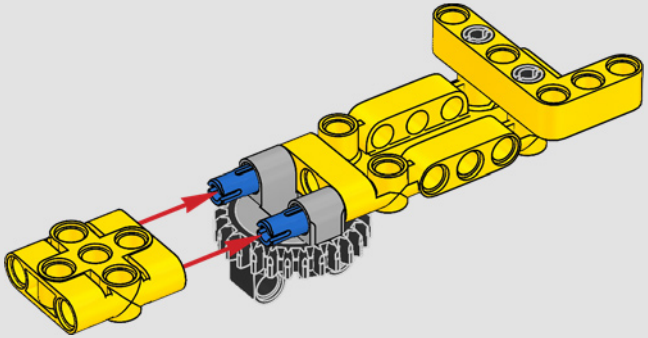

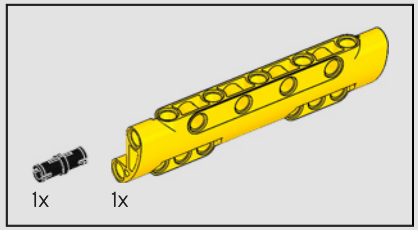

474

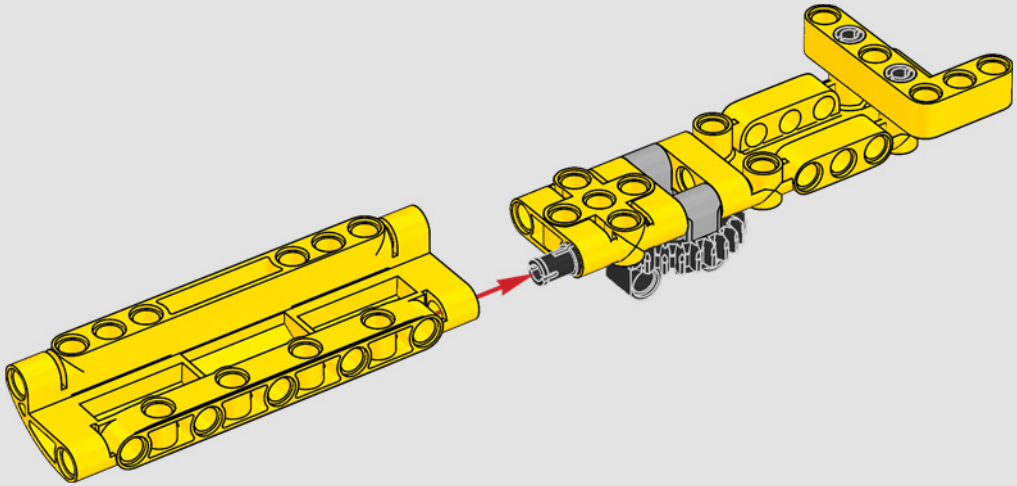

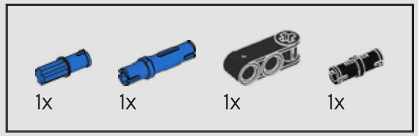

475

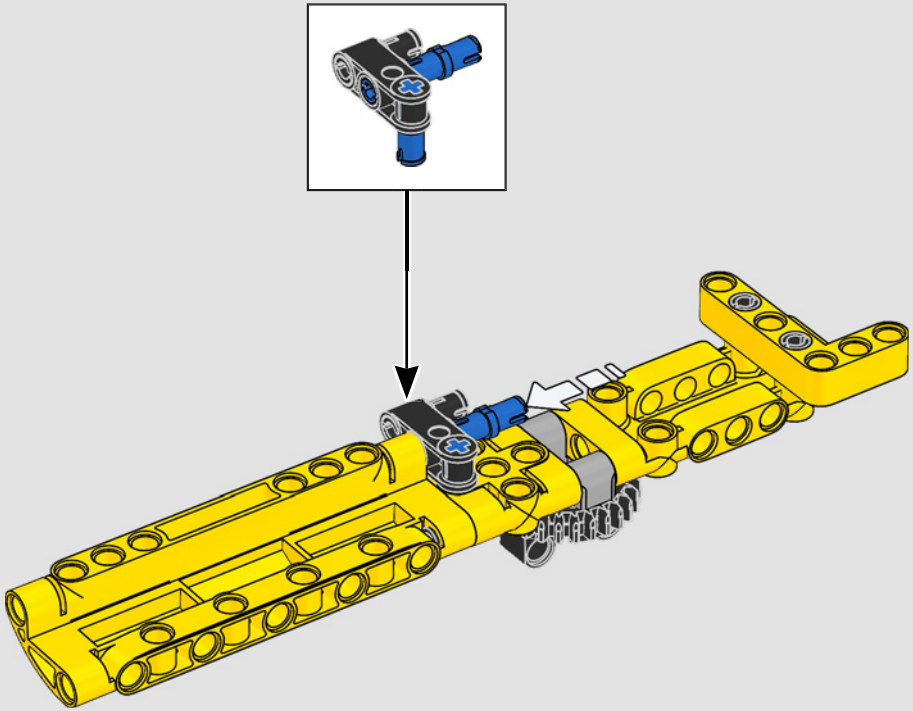

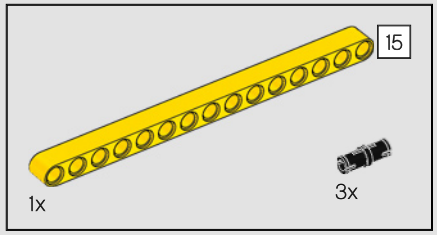

476

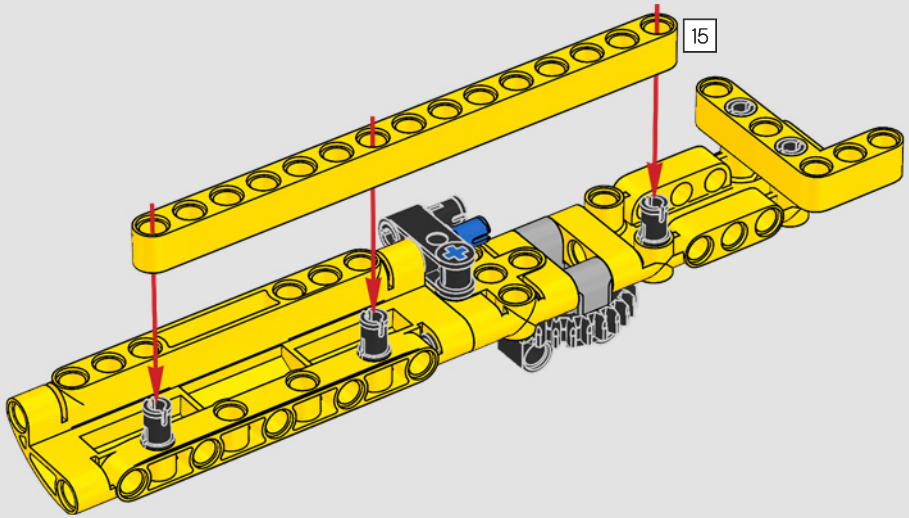

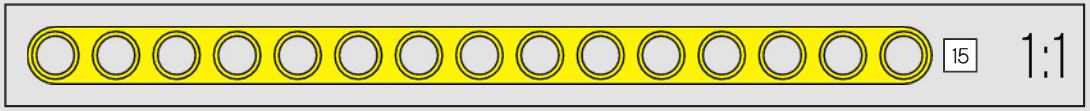

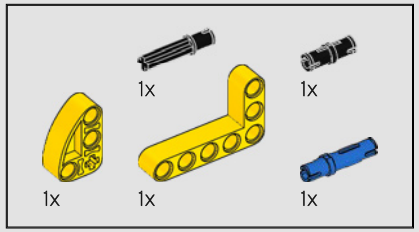

477

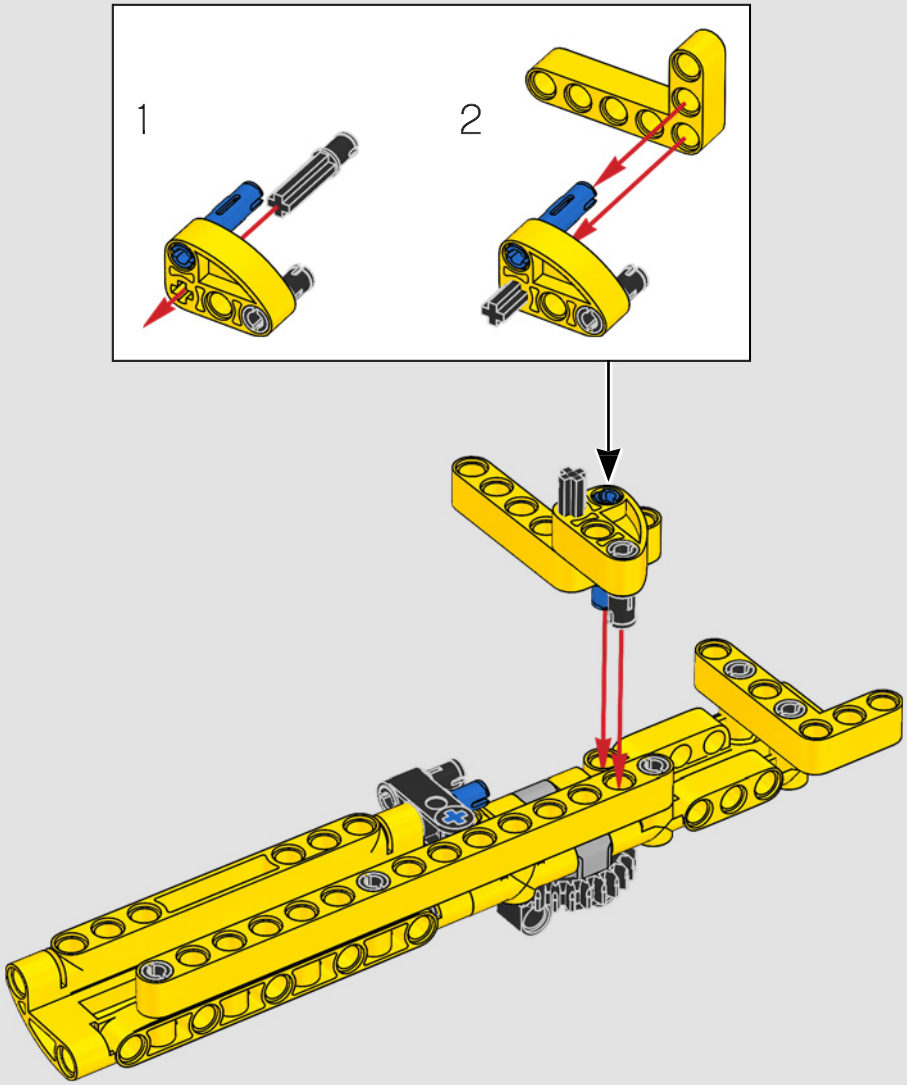

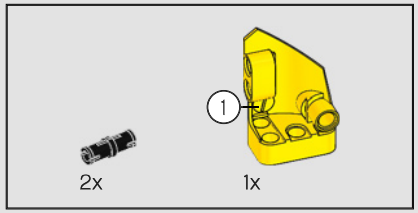

478

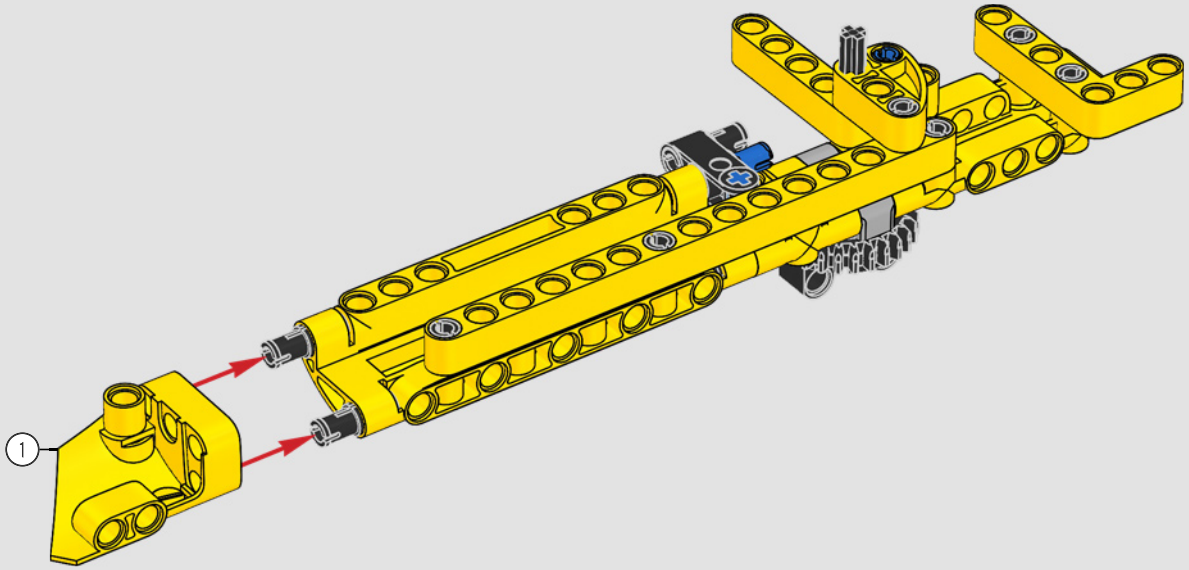

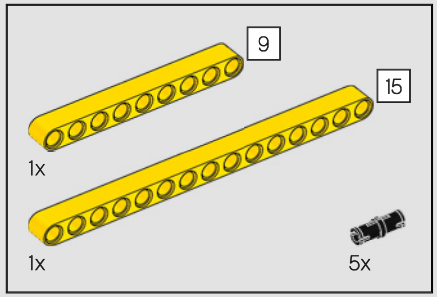

479

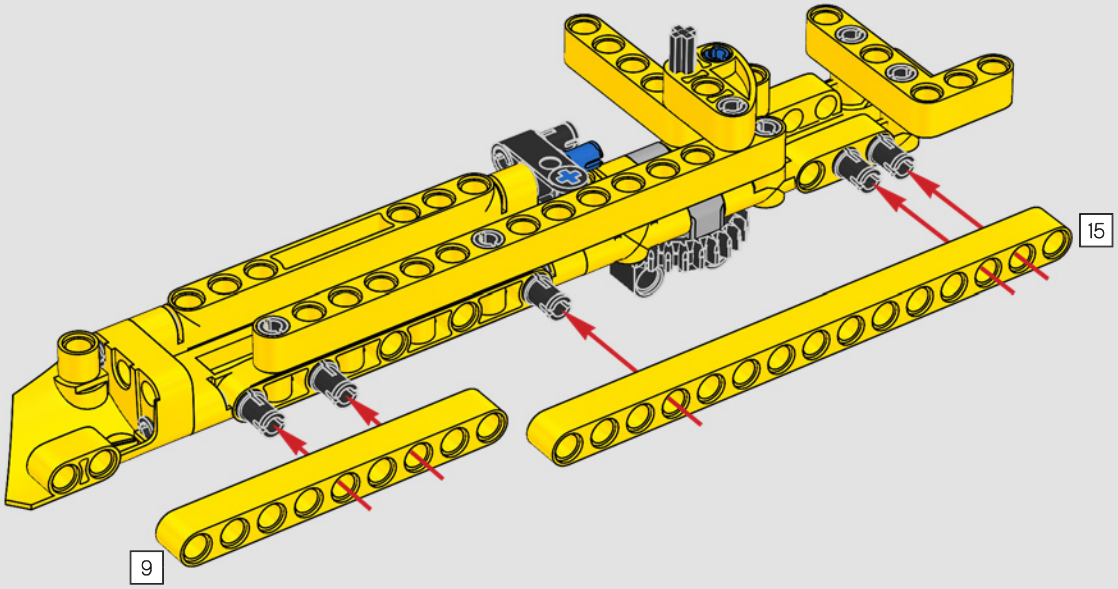

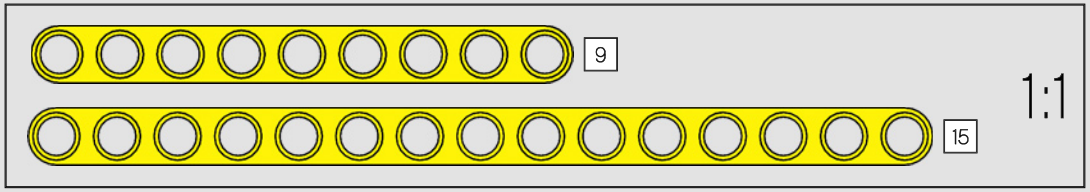

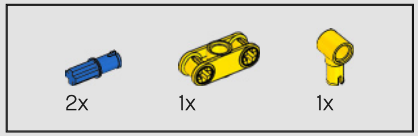

480

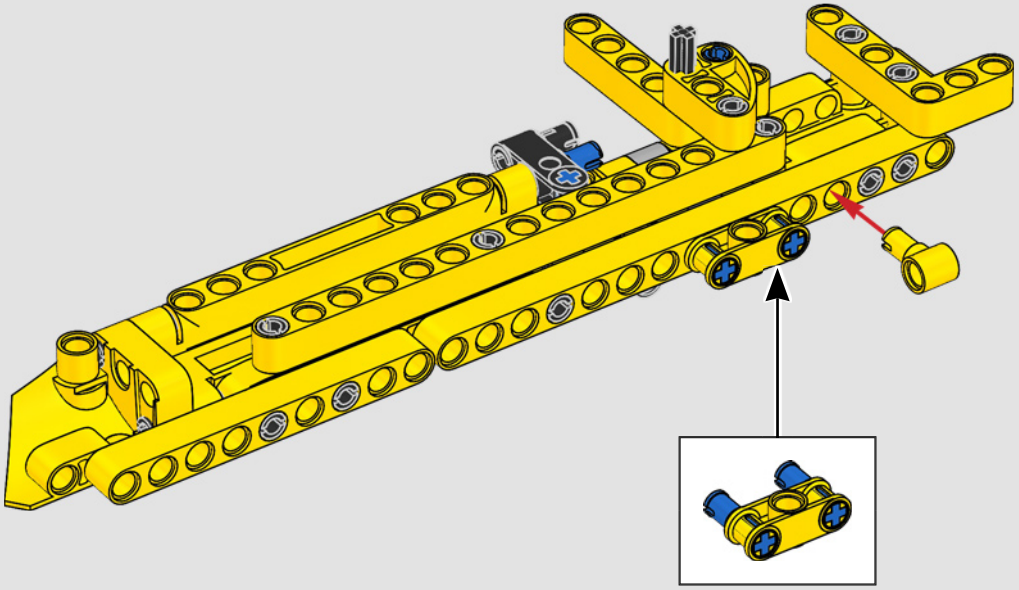

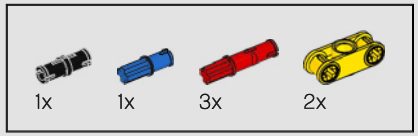

481

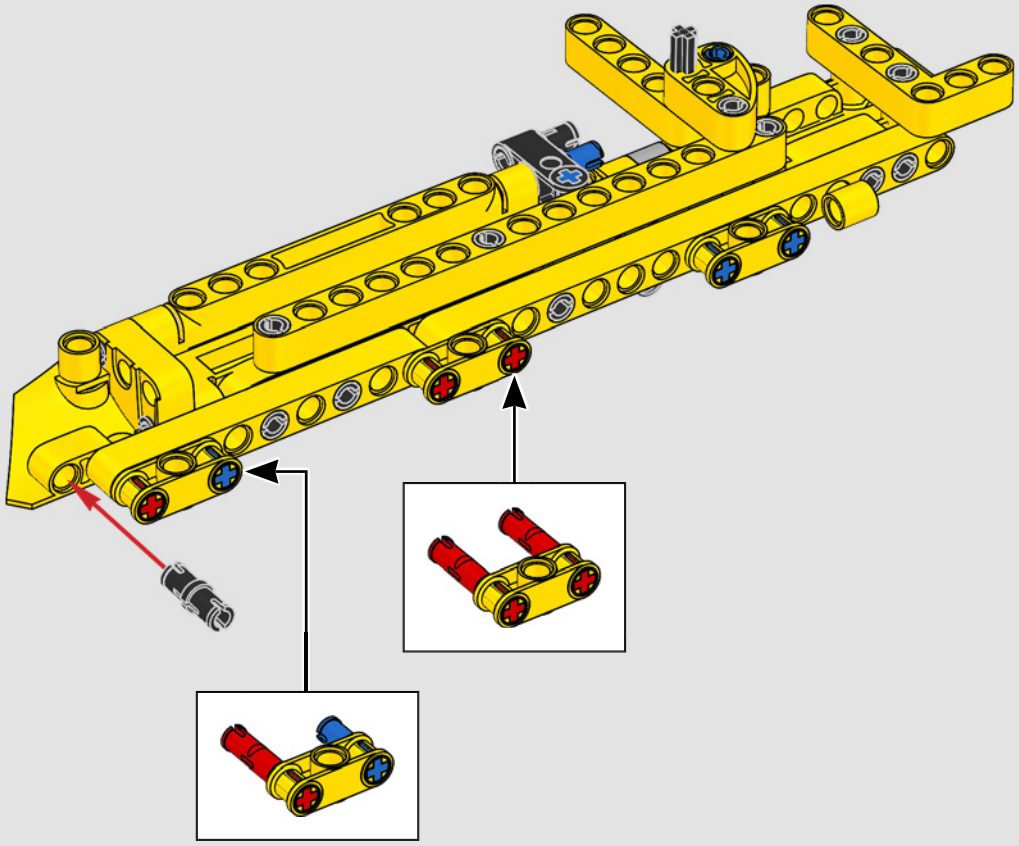

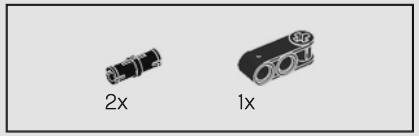

482

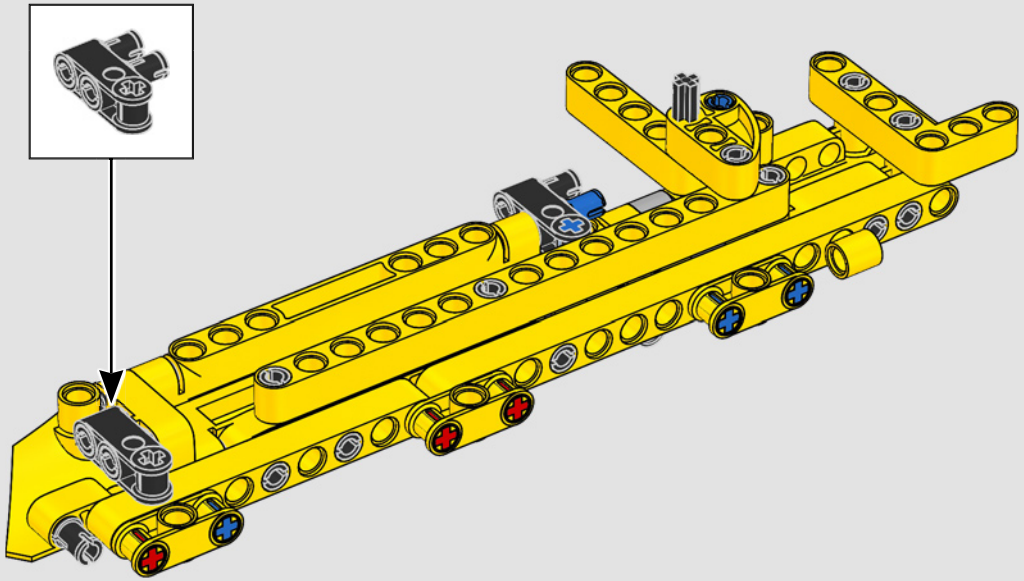

483

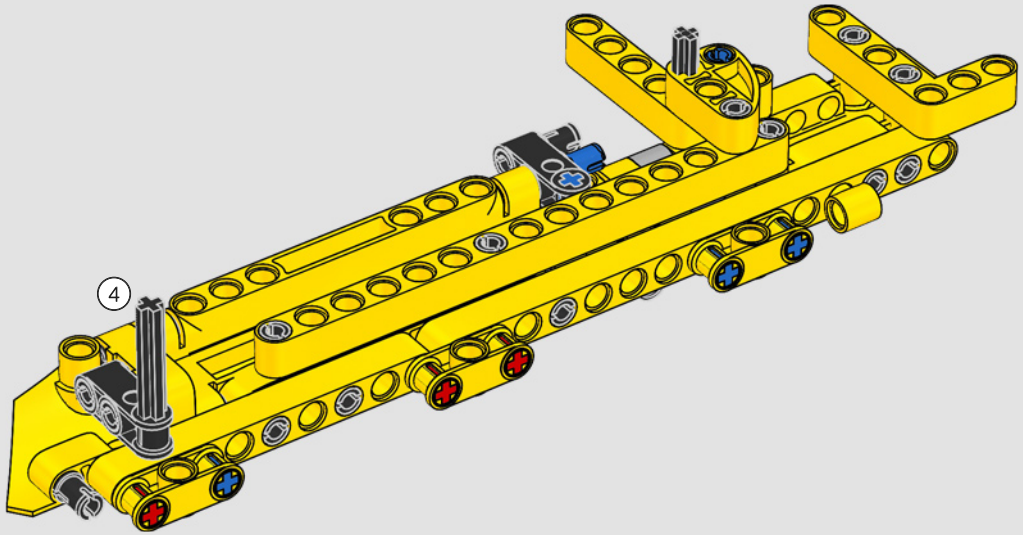

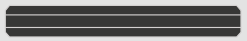

1:1

484

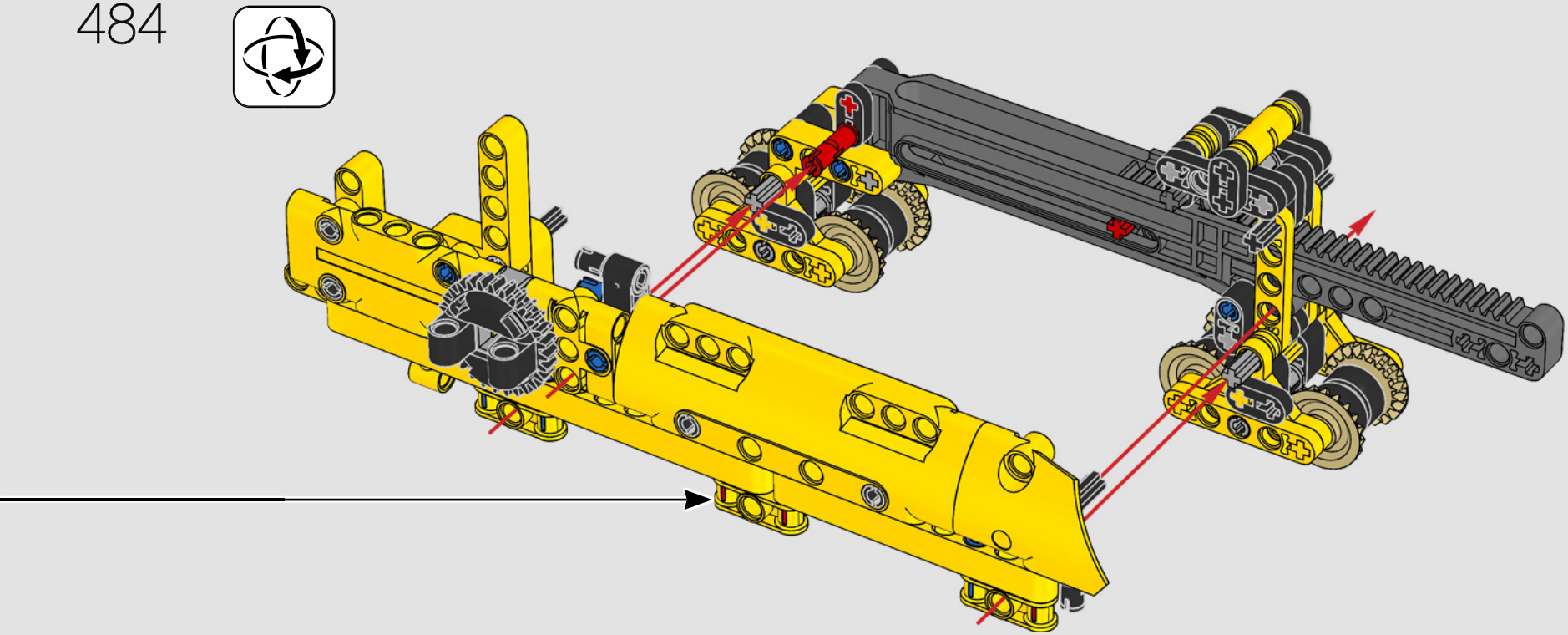

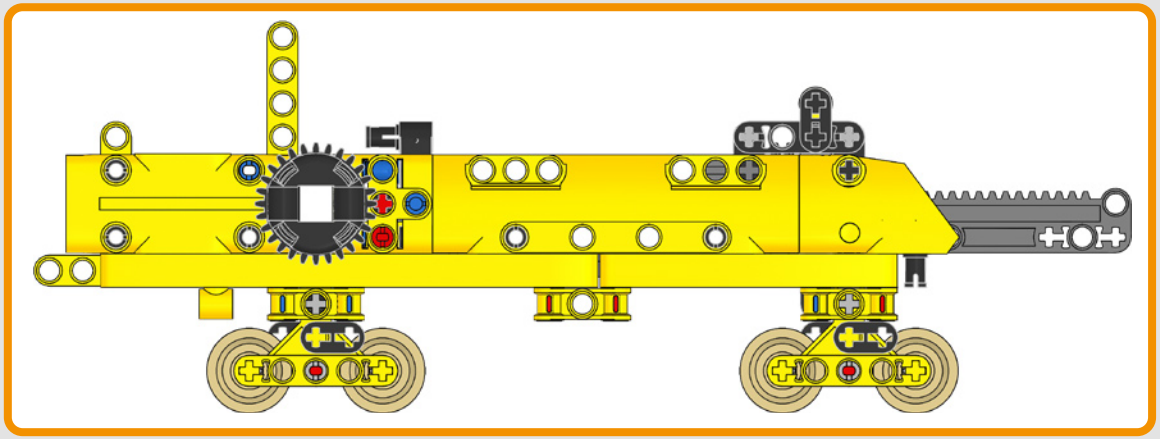

1x

485

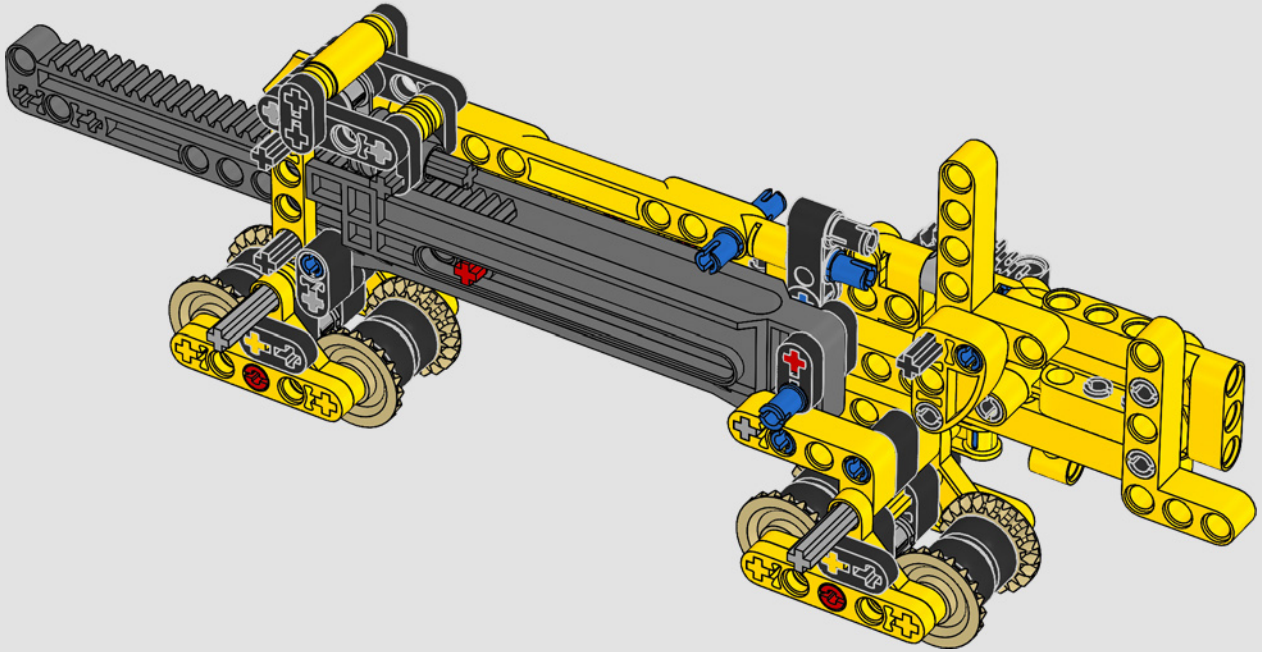

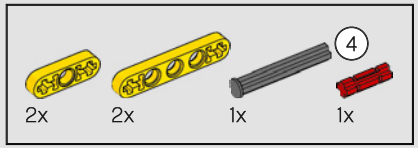

486

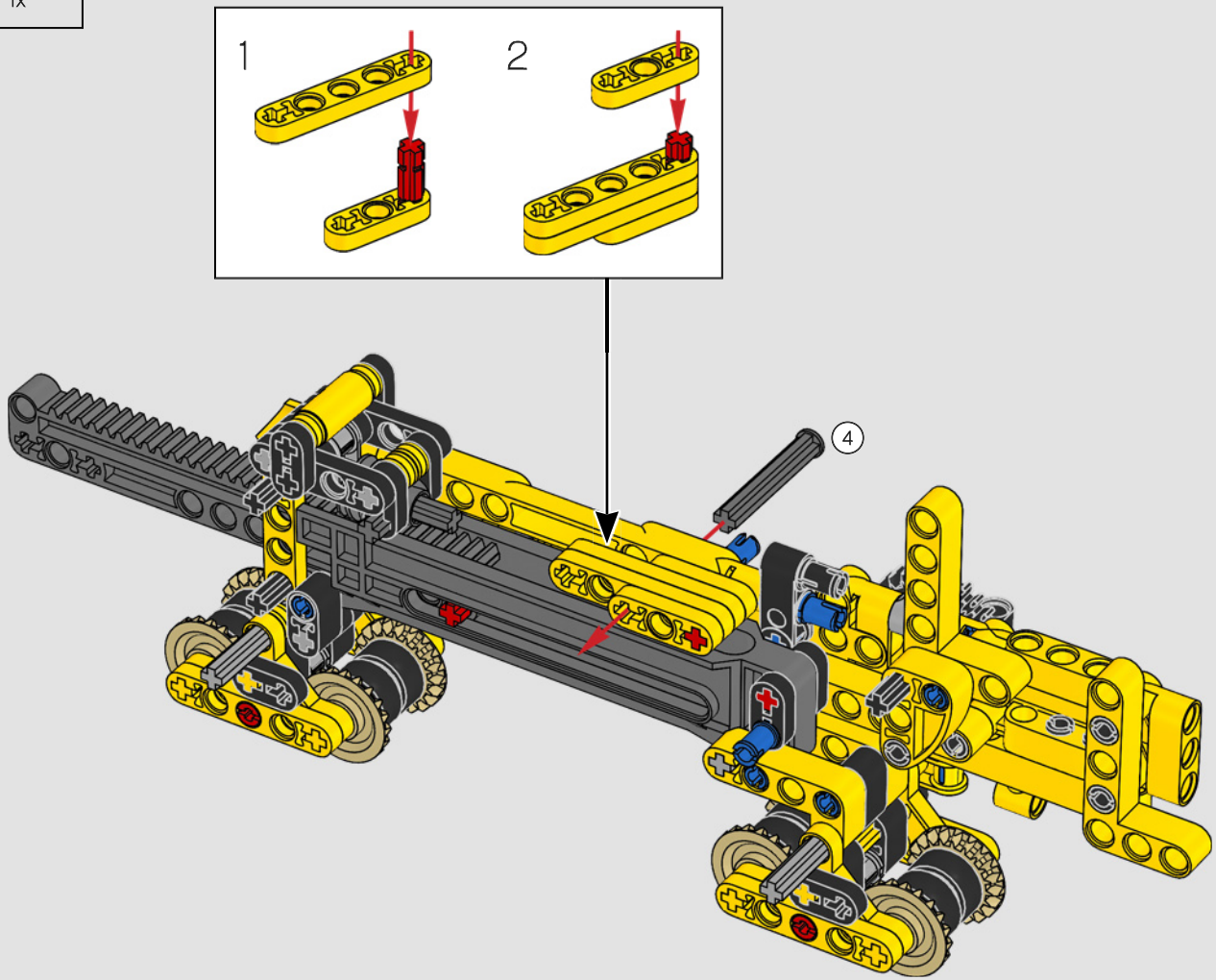

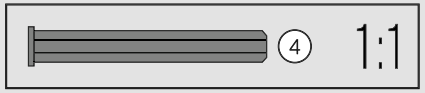

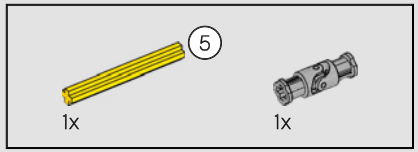

487

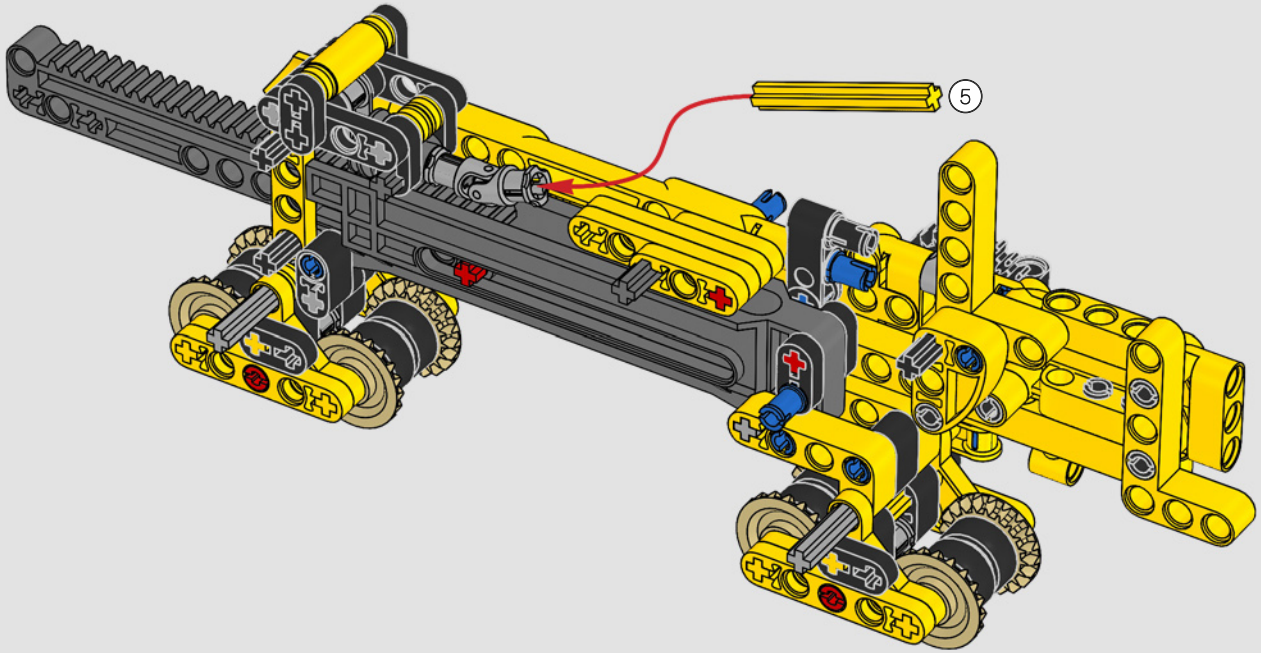

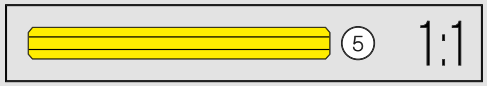

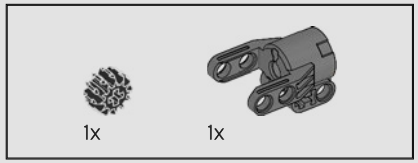

488

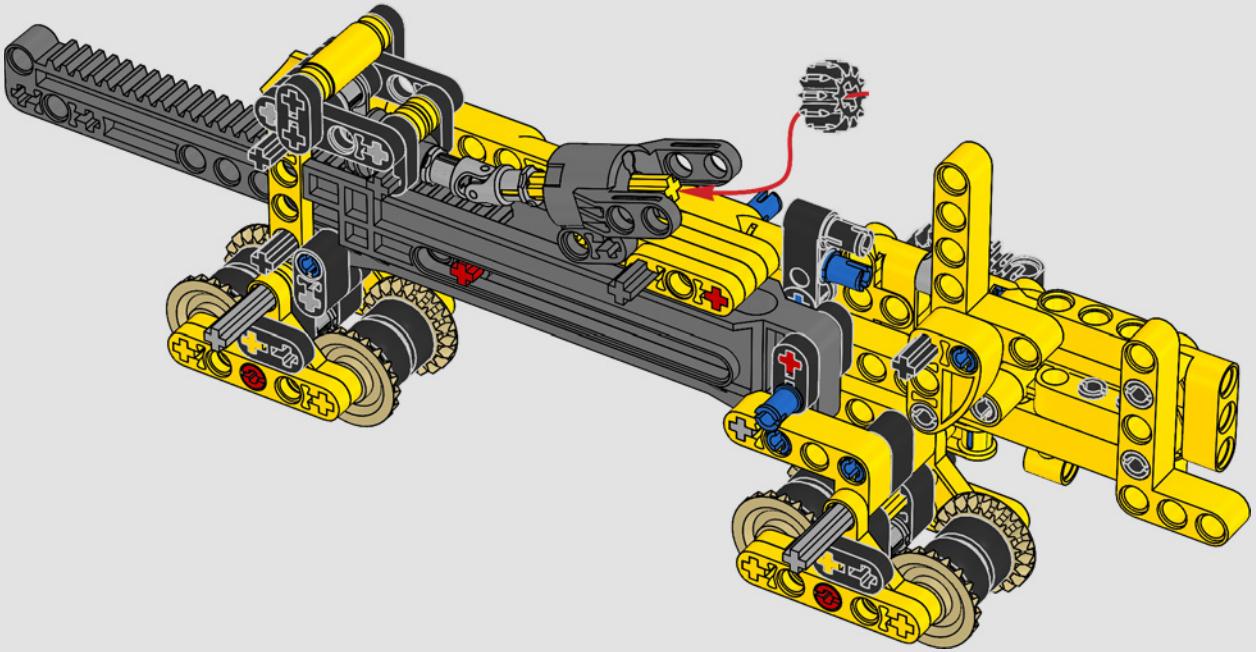

1x

489

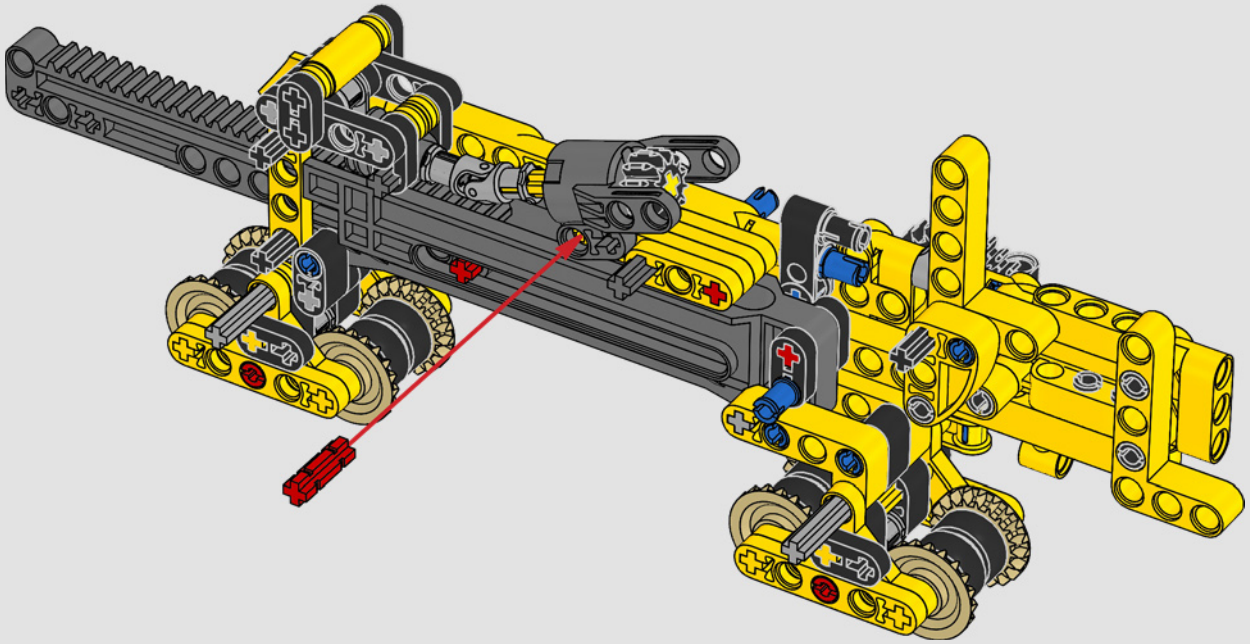

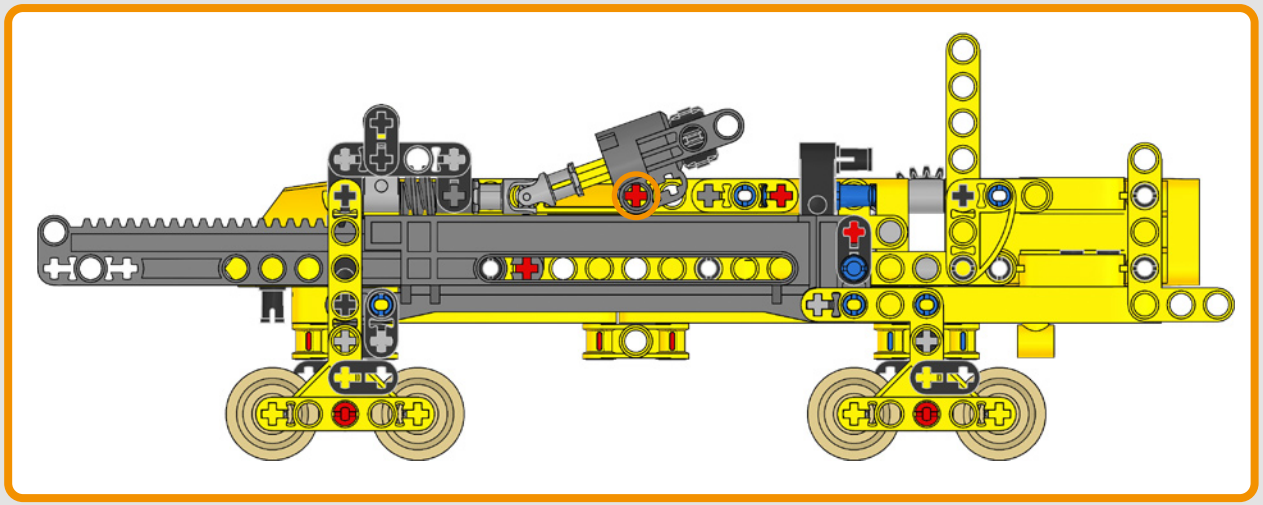

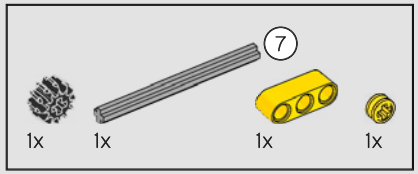

490

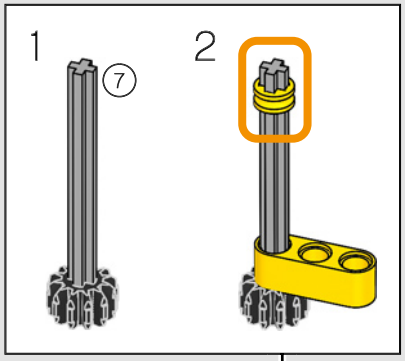

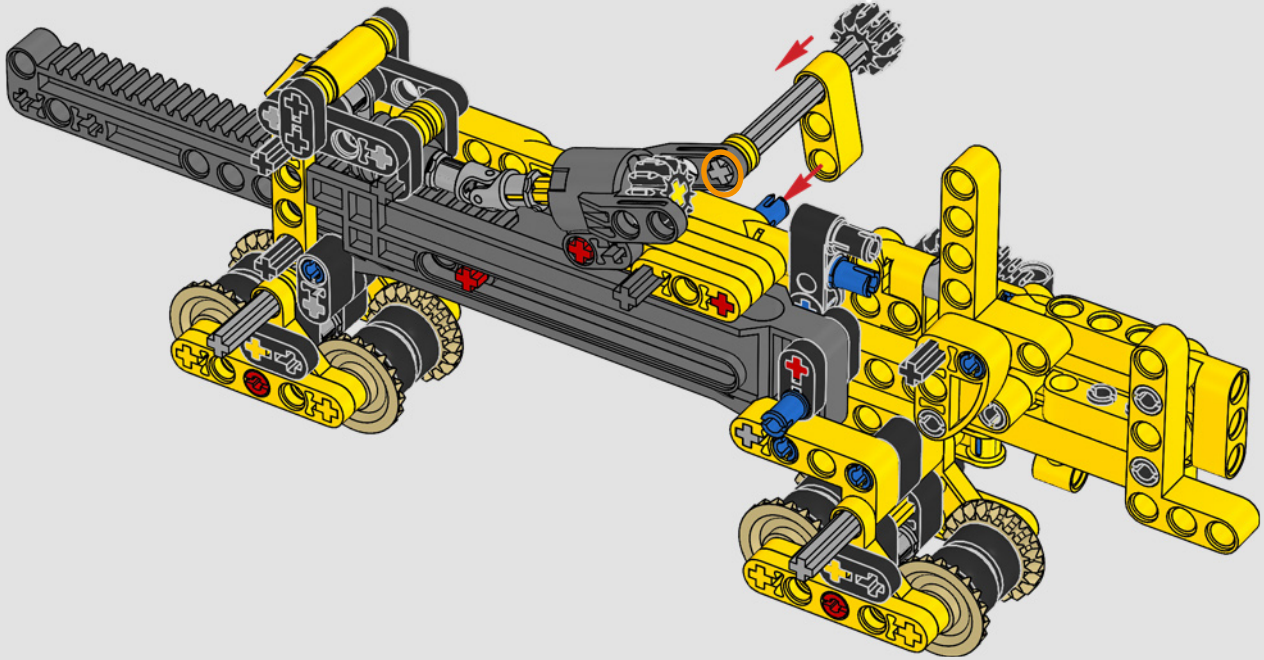

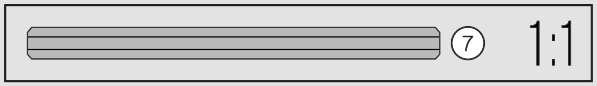

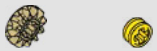

491

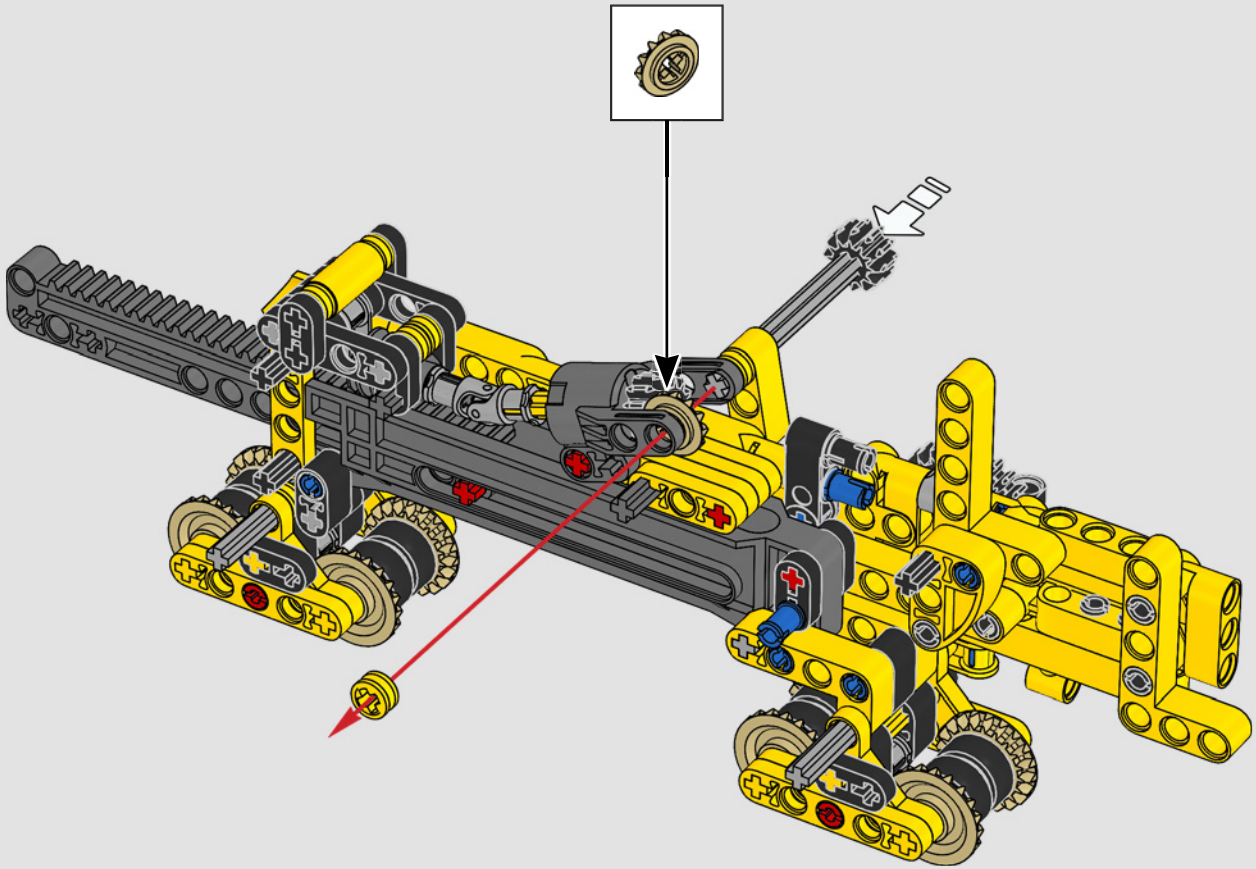

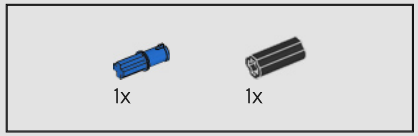

492

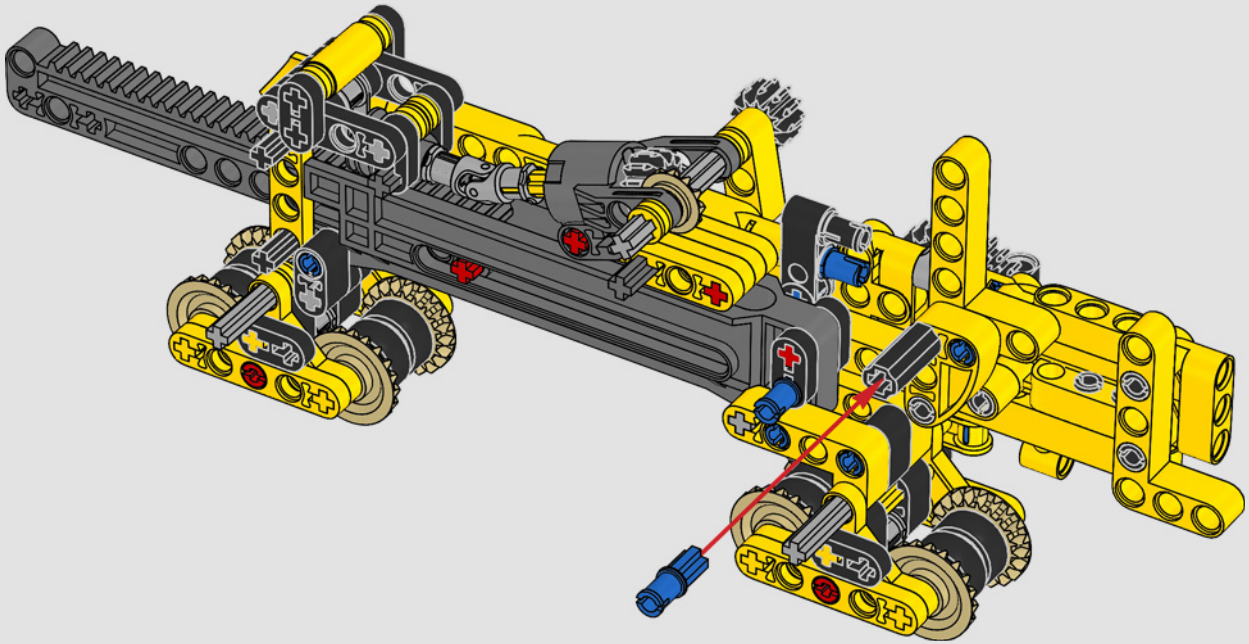

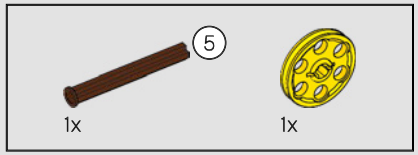

493

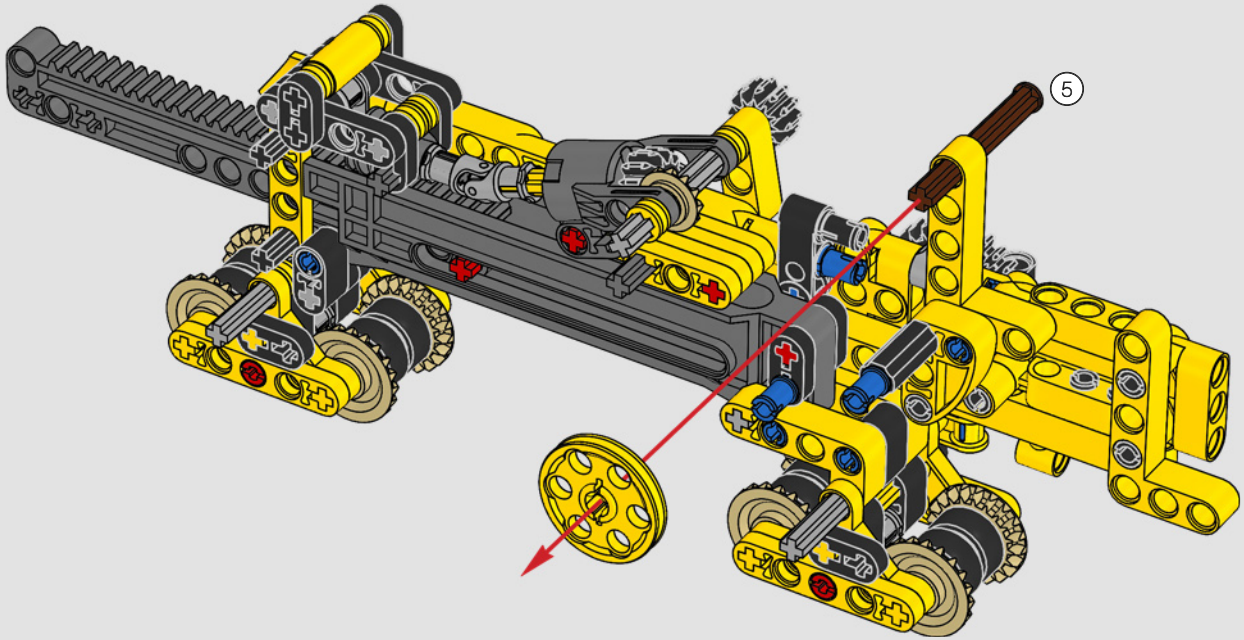

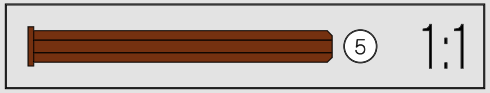

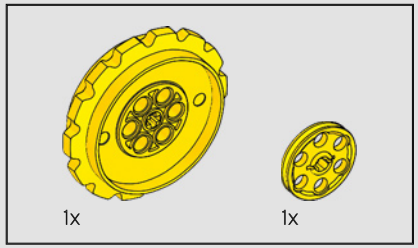

494

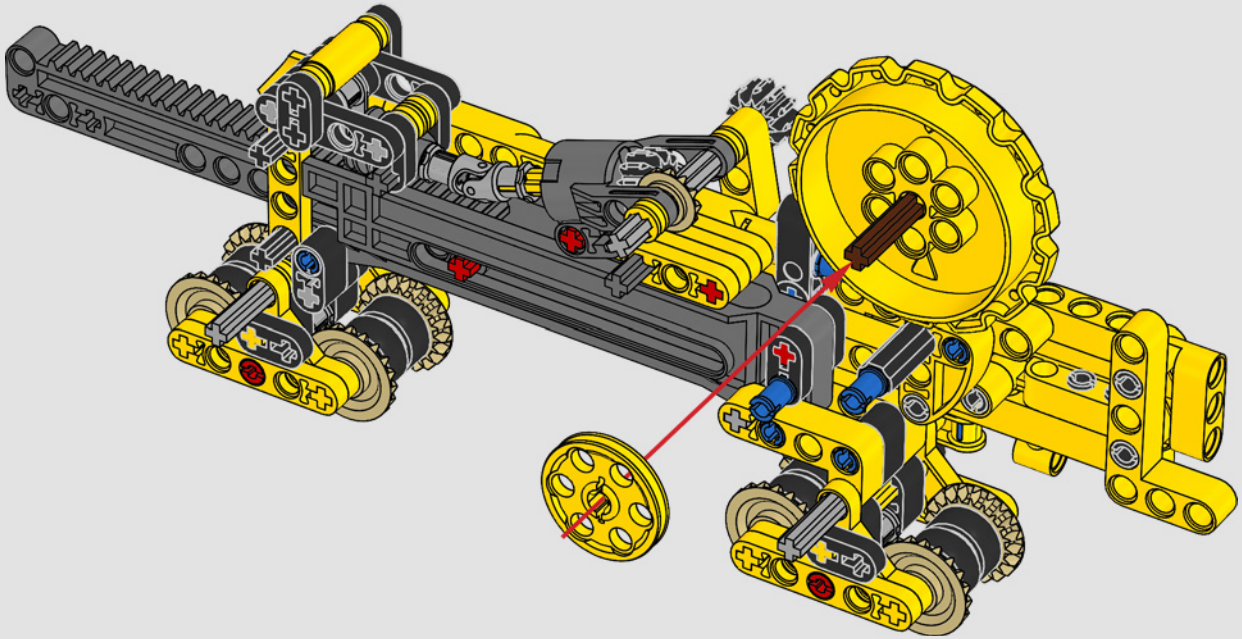

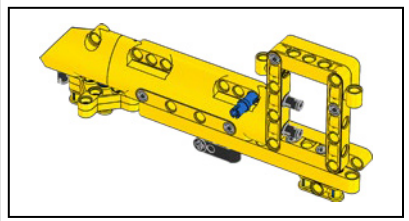

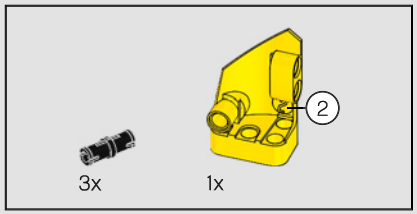

495

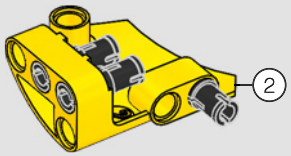

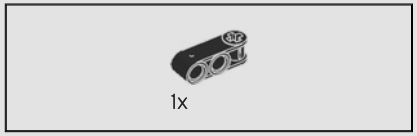

496

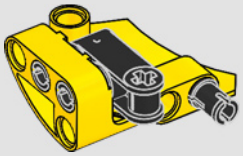

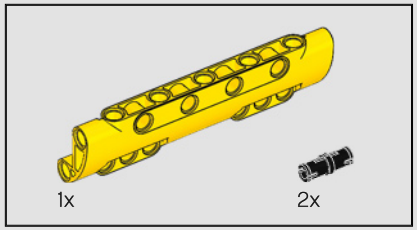

497

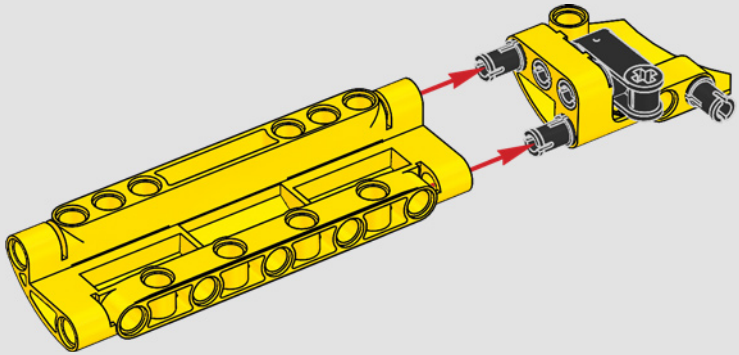

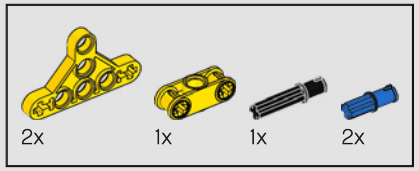

498

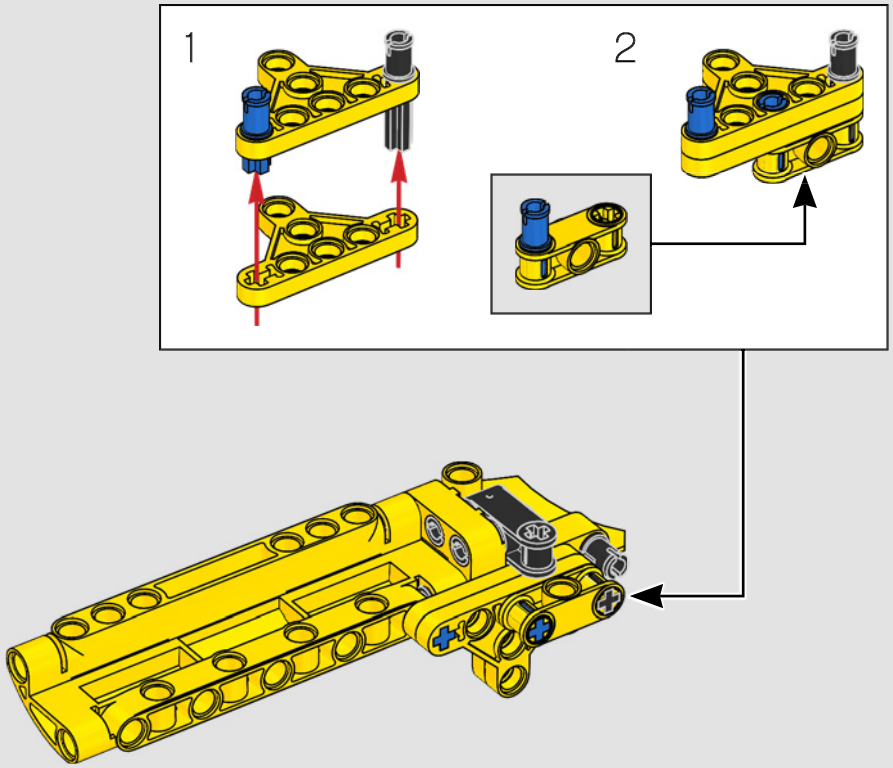

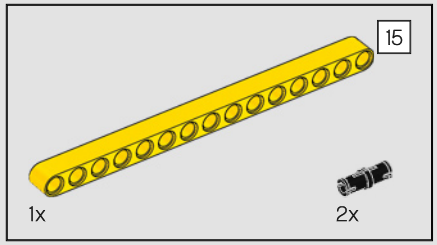

499

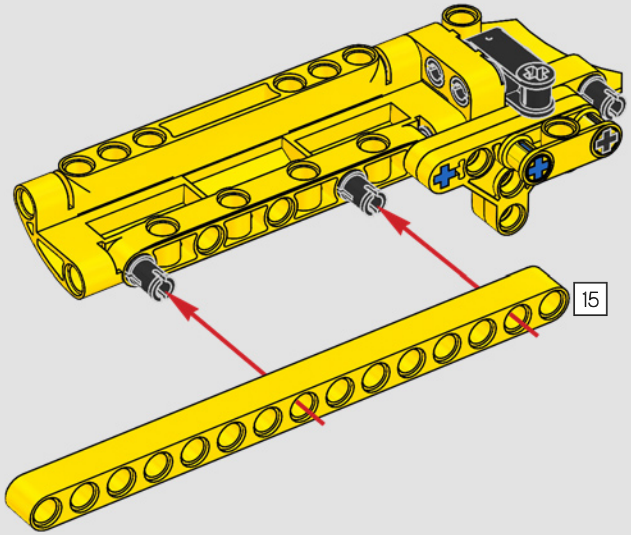

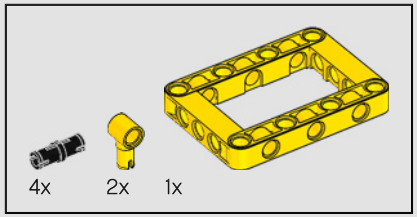

500

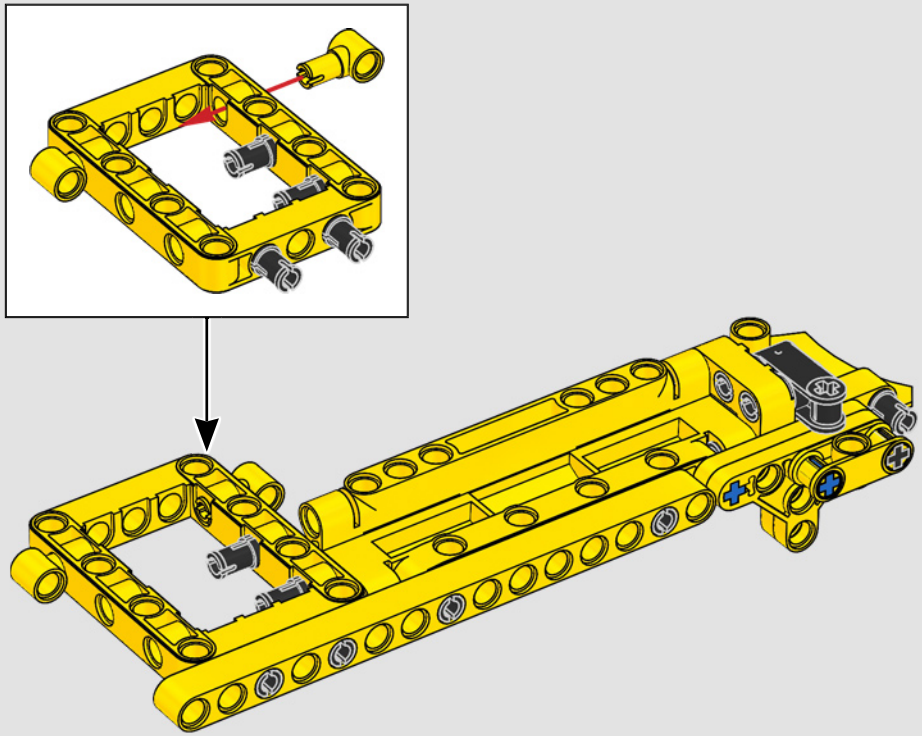

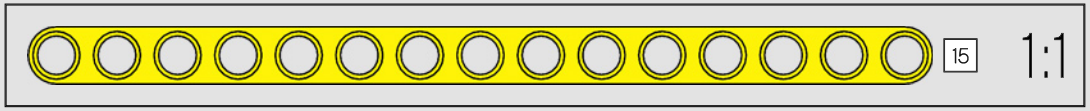

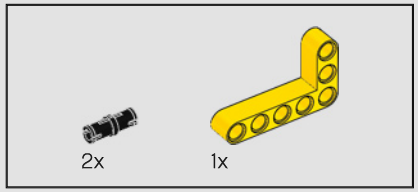

501

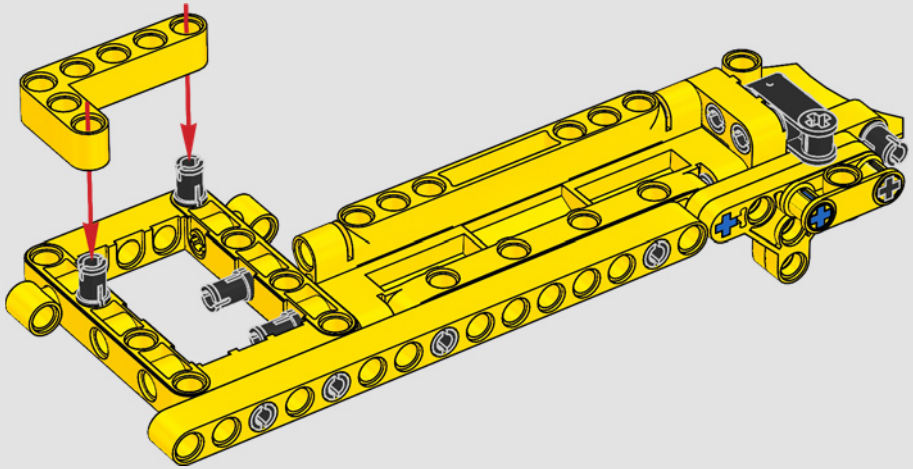

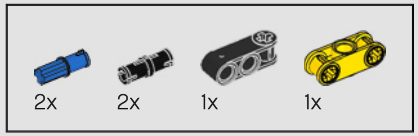

502

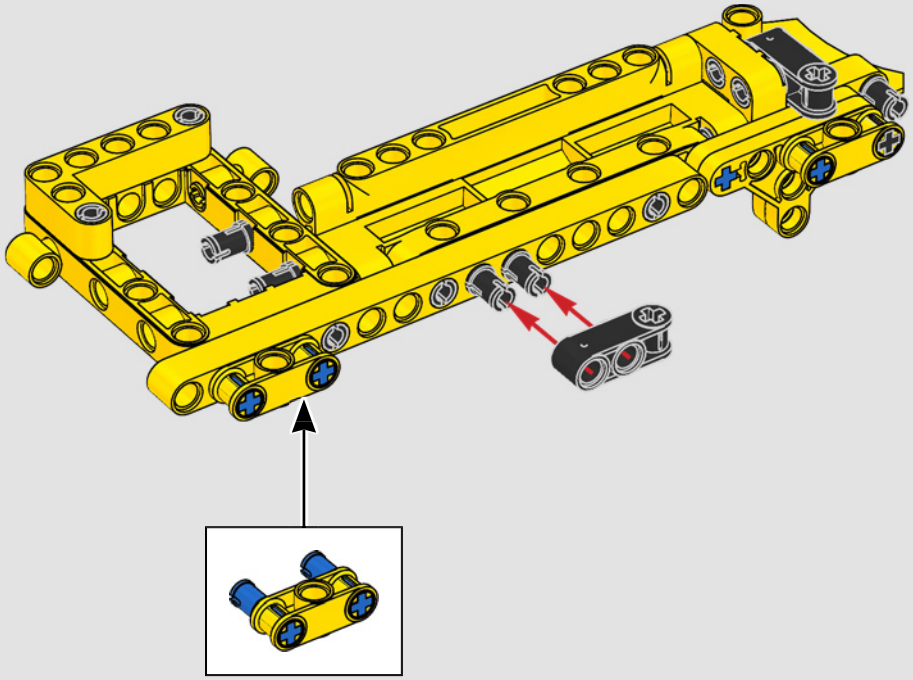

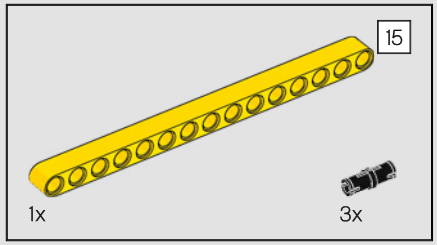

503

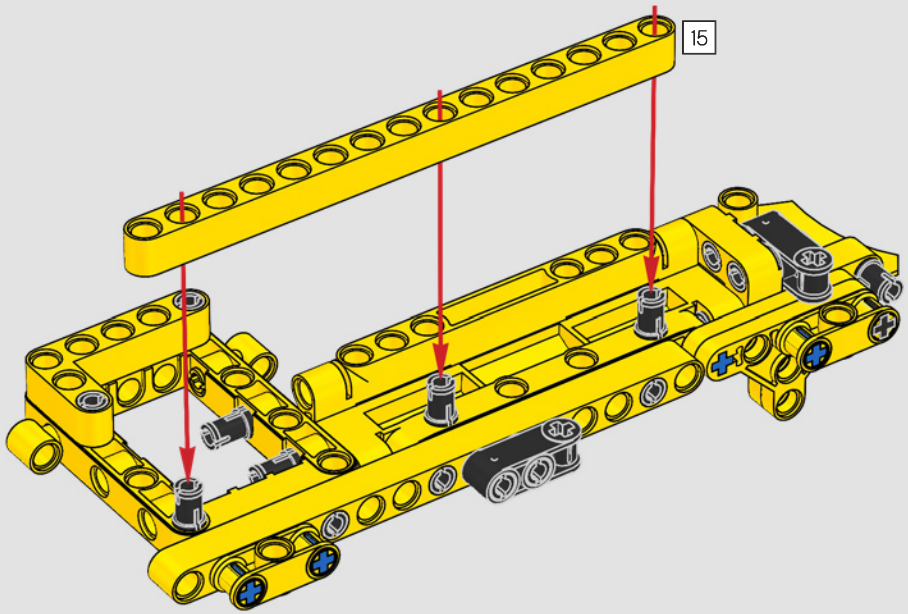

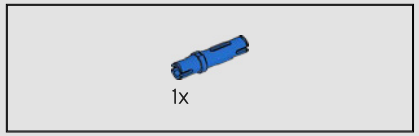

504

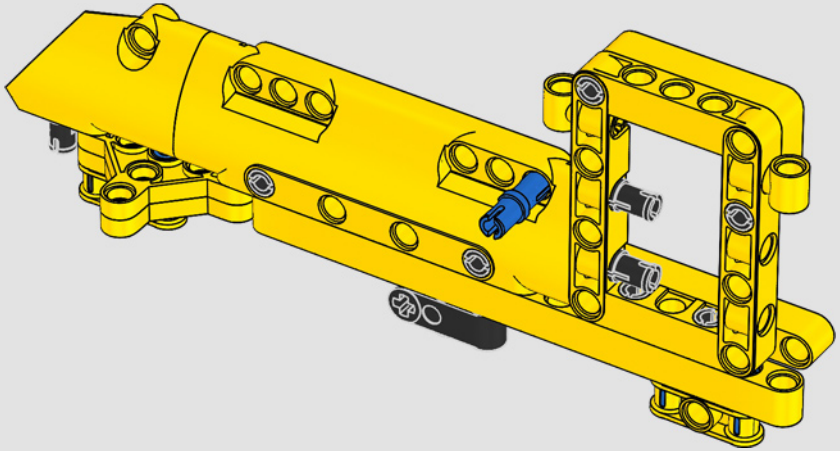

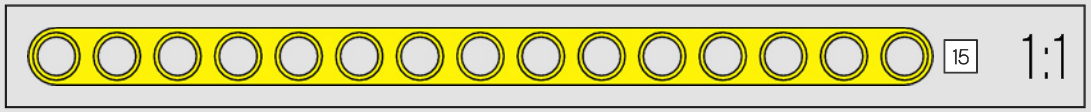

505

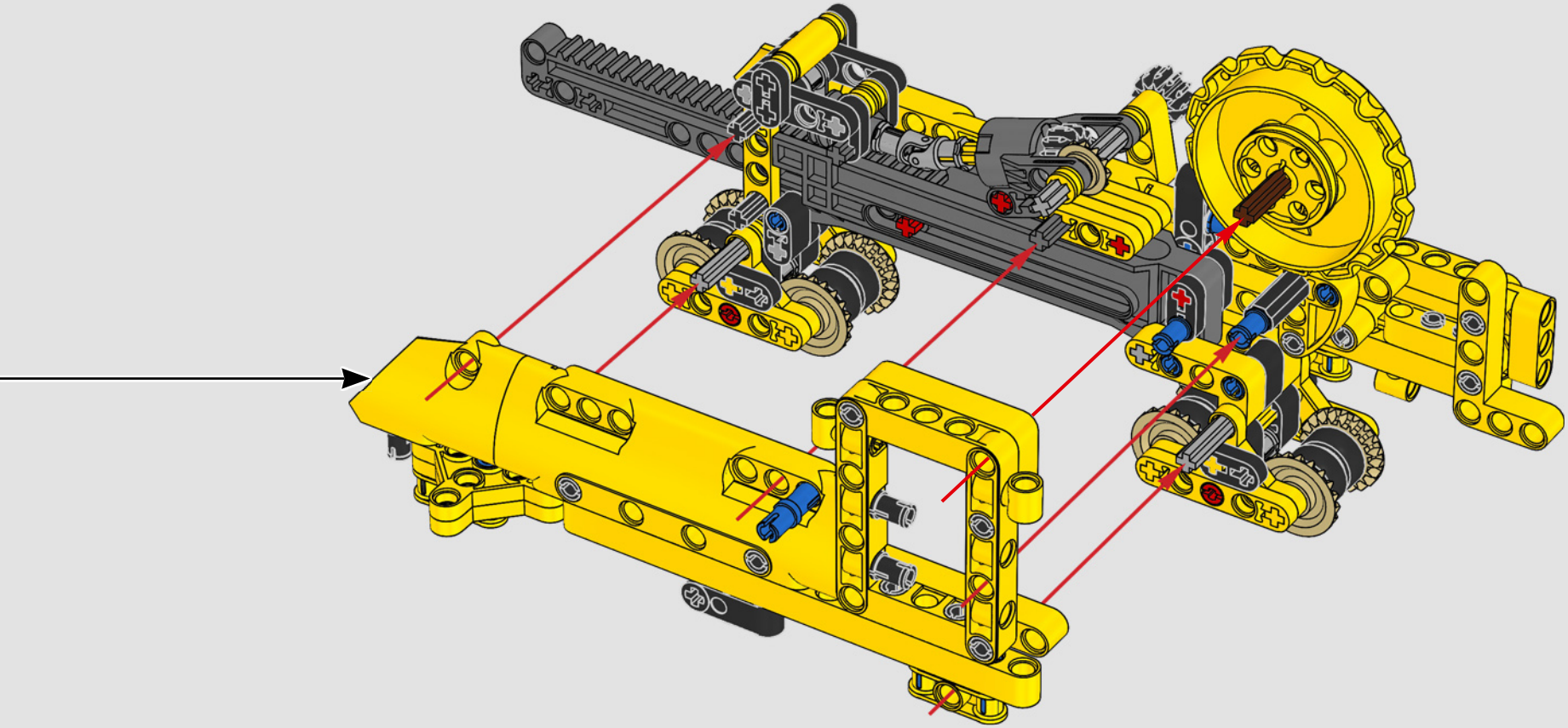

506

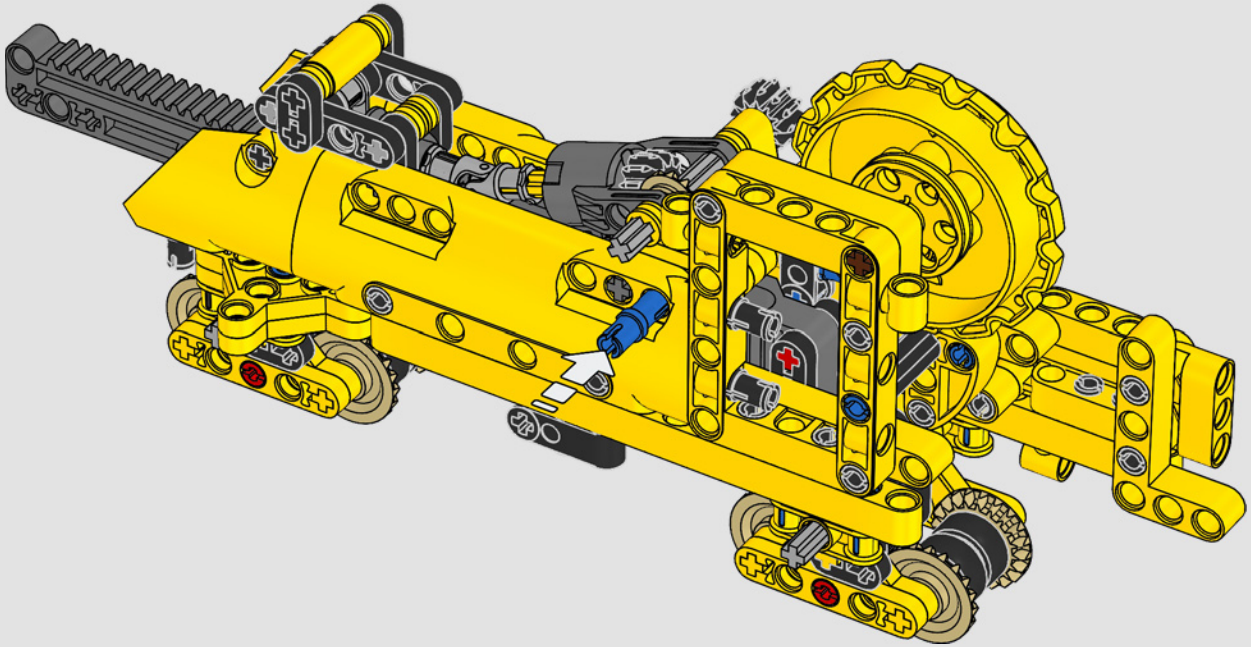

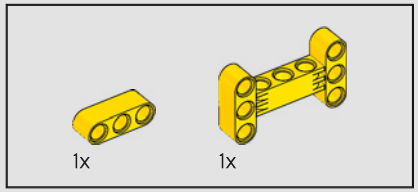

507

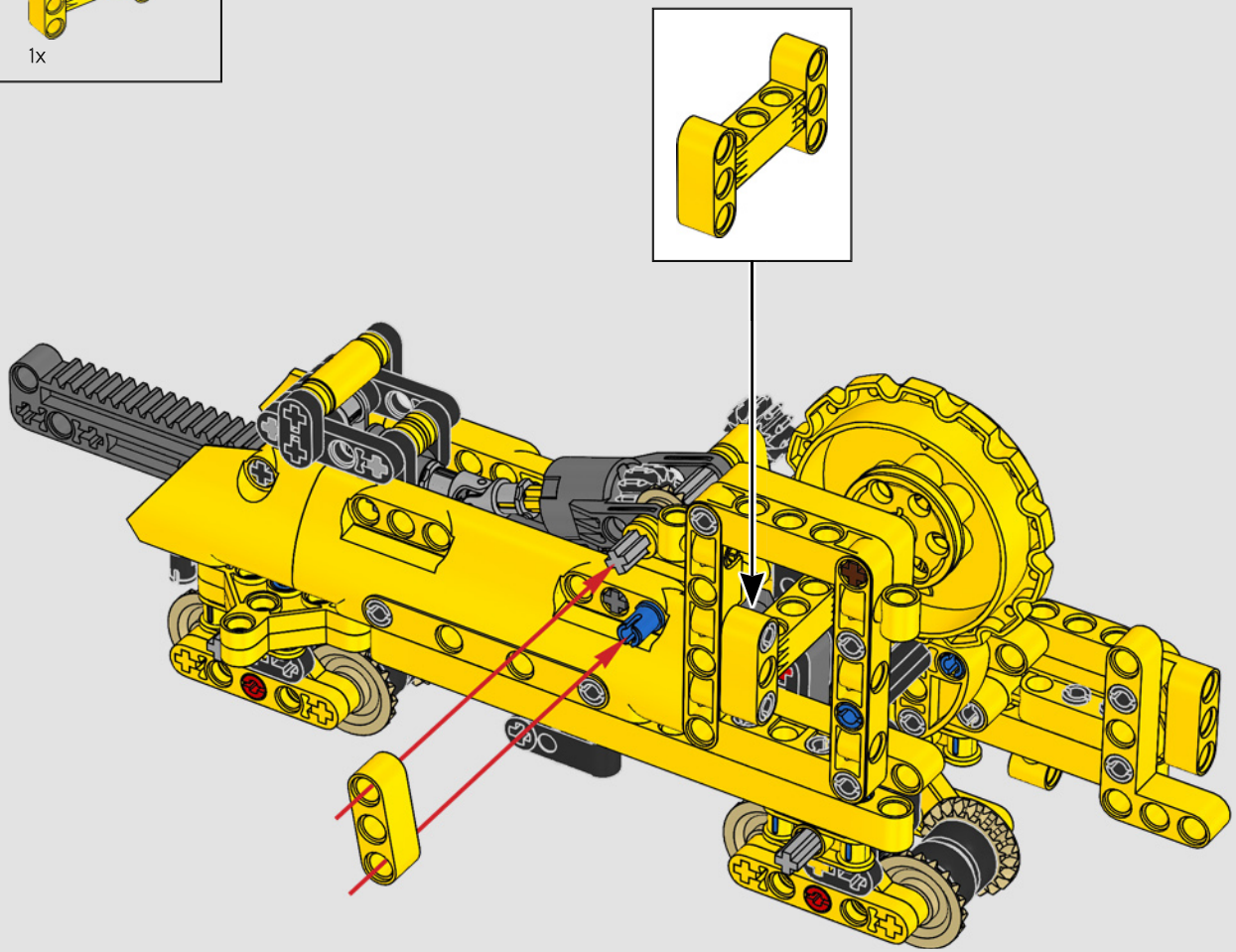

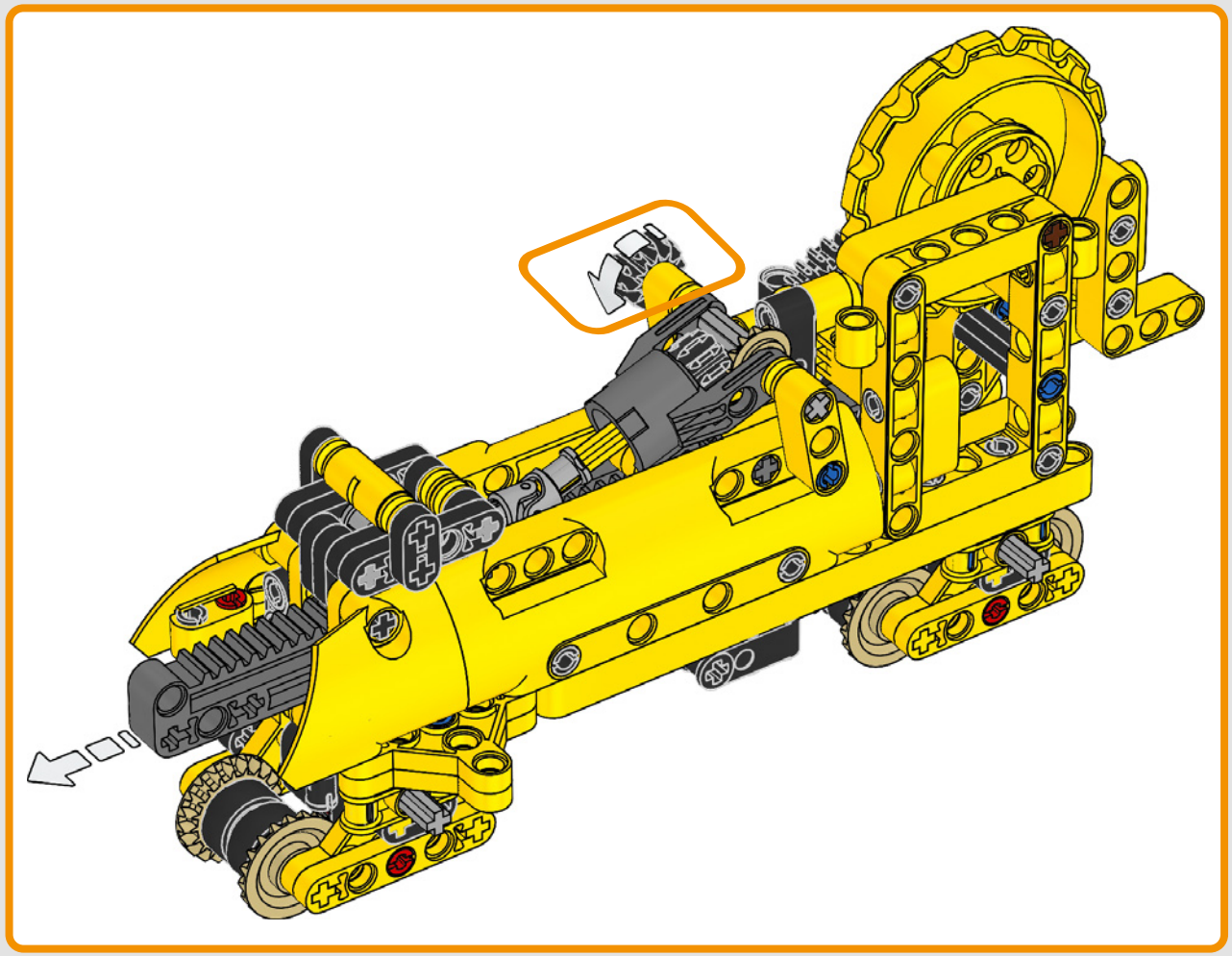

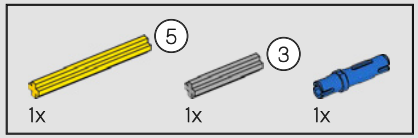

508

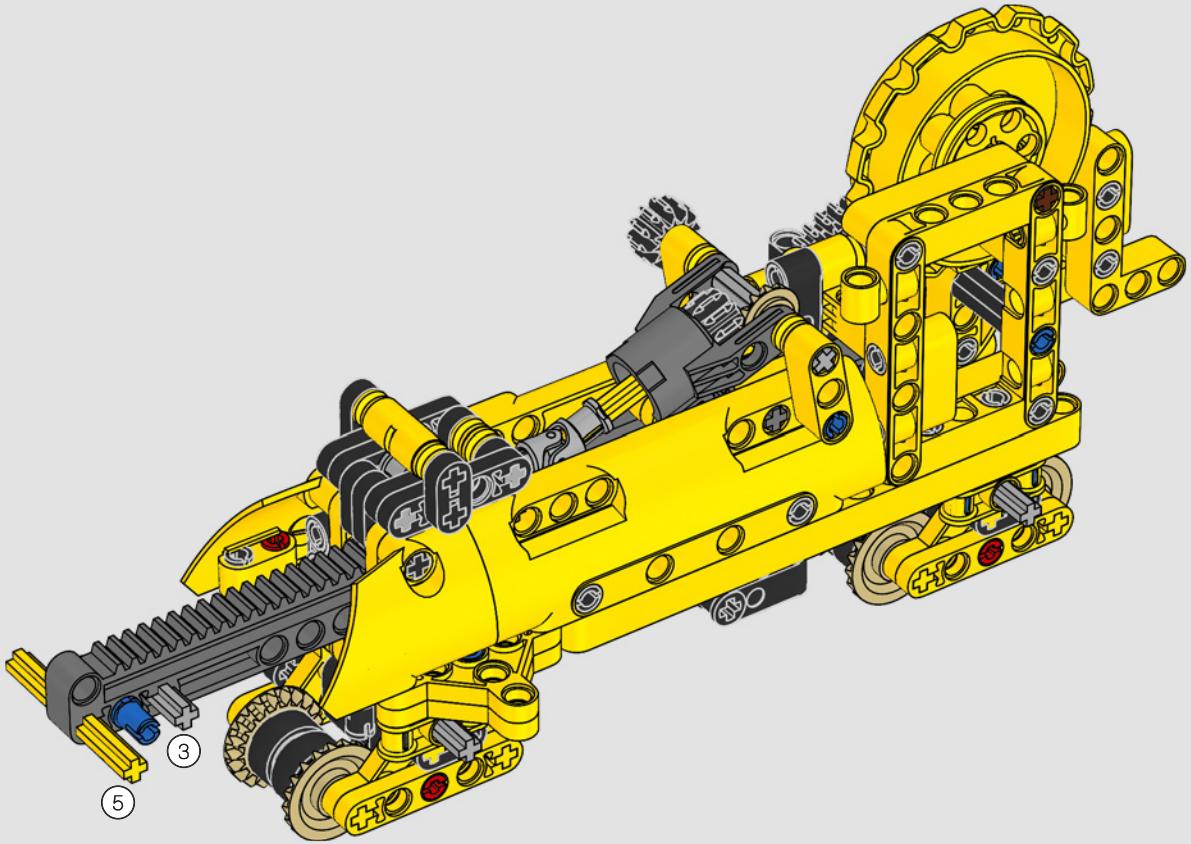

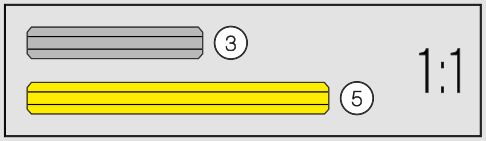

2x

509

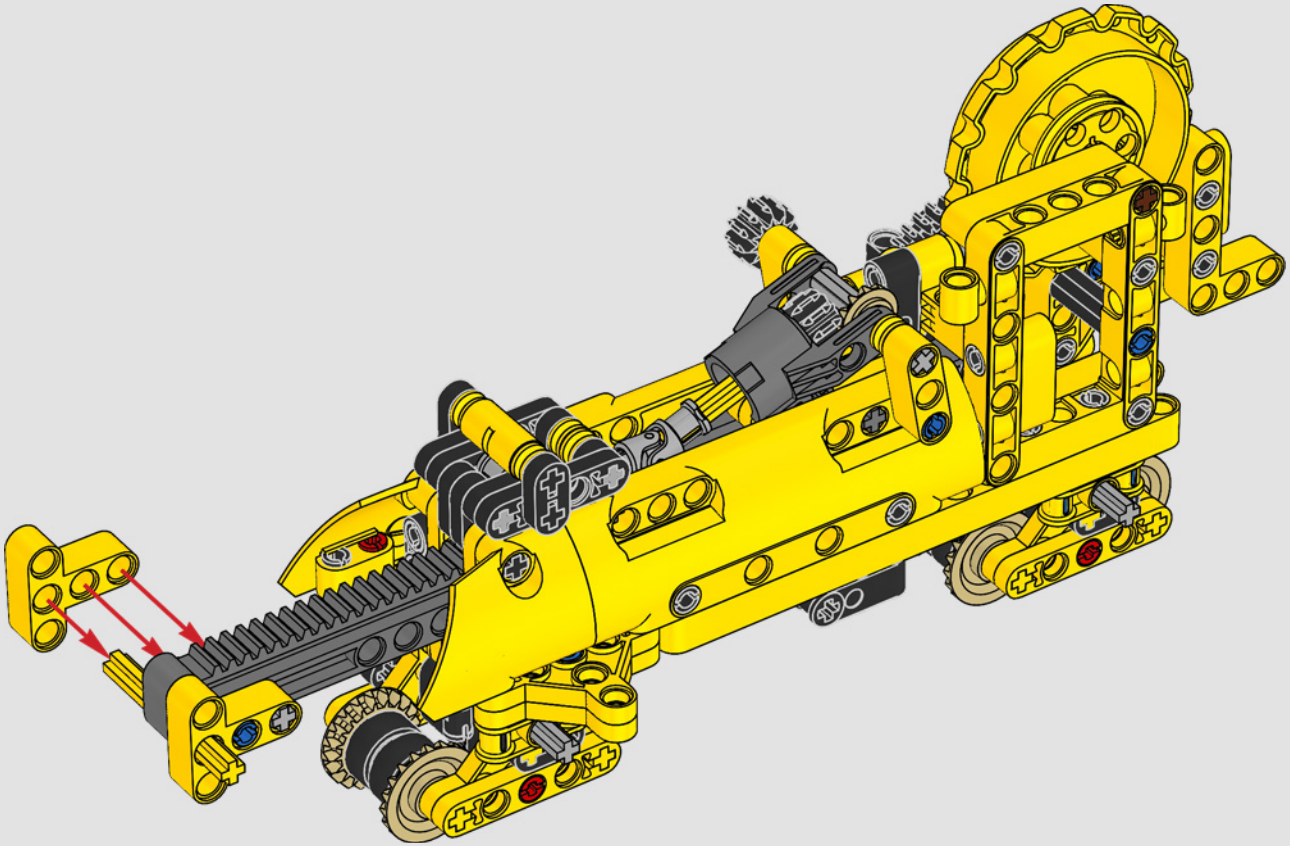

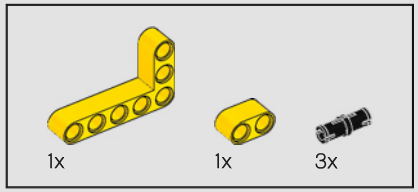

510

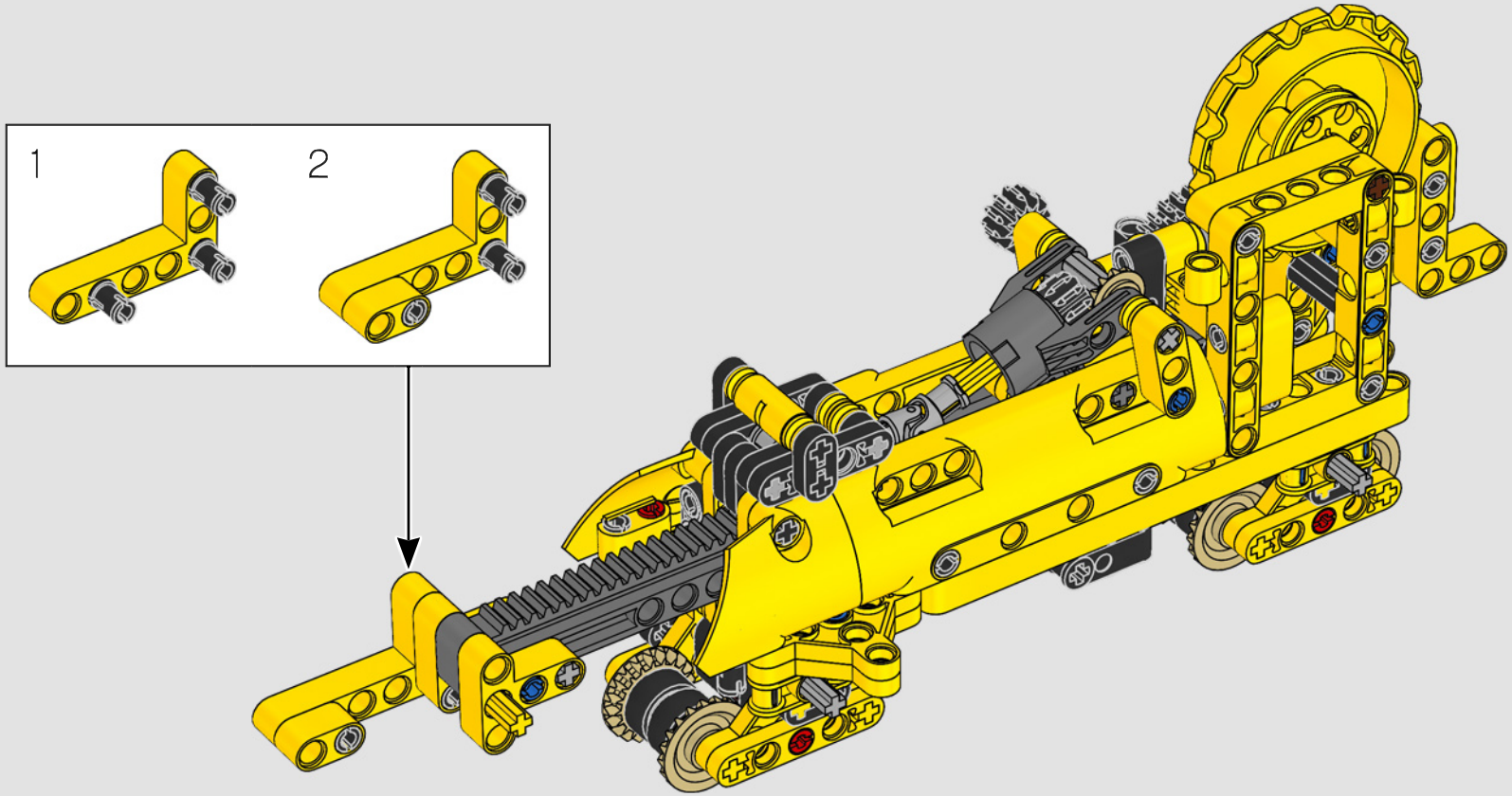

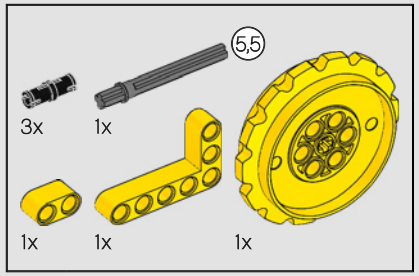

511

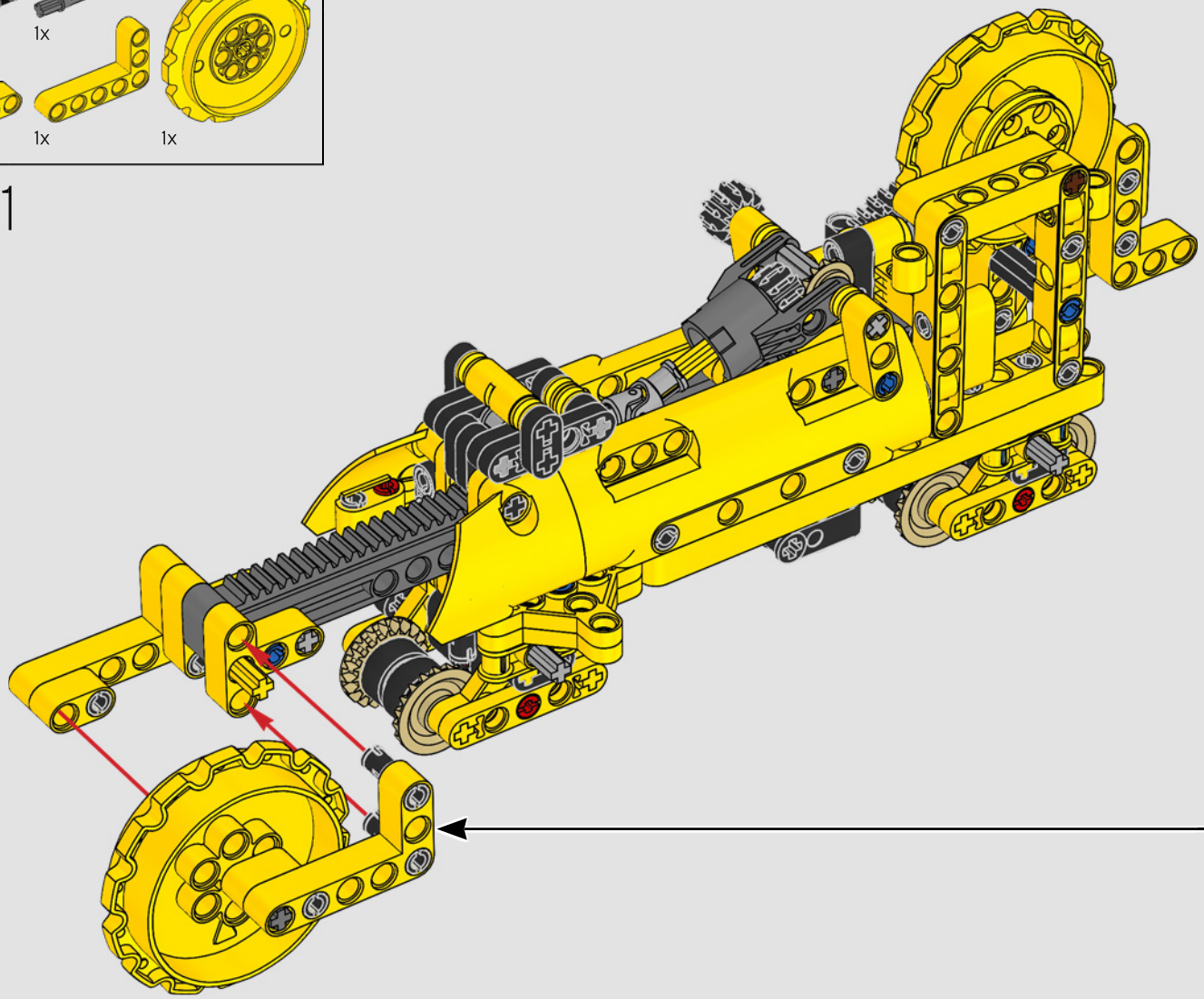

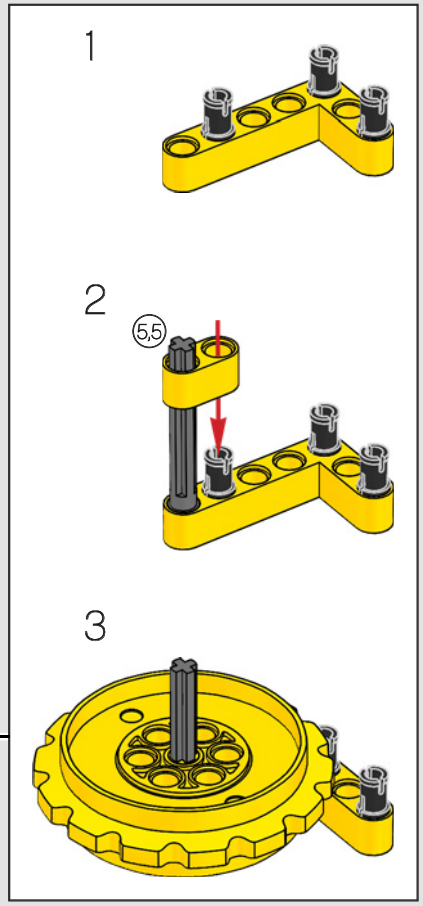

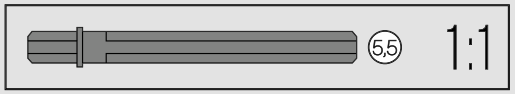

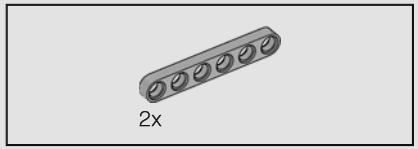

512

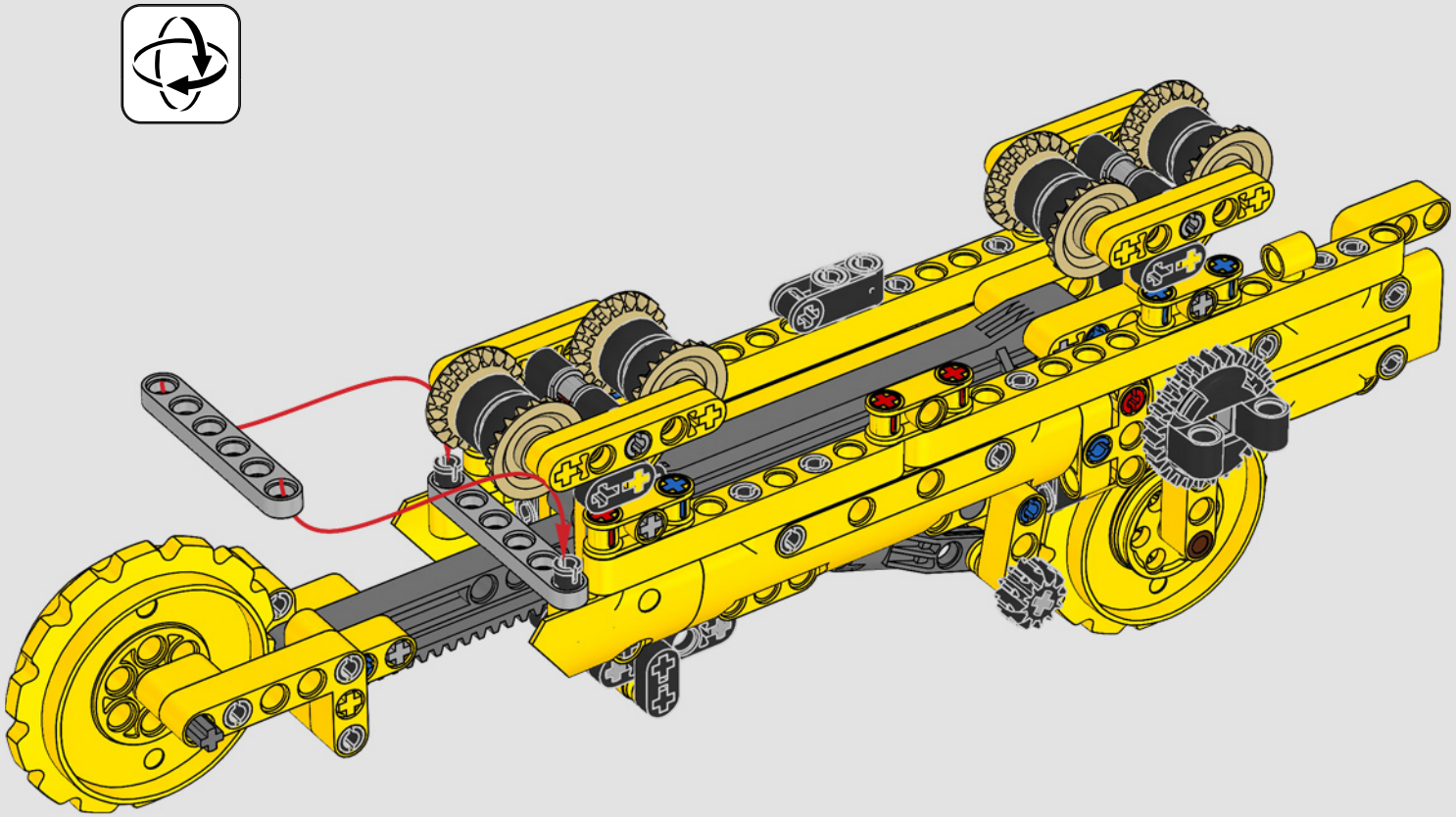

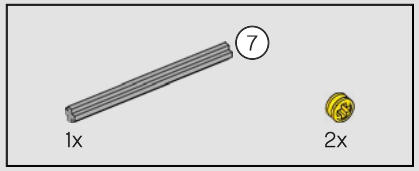

513

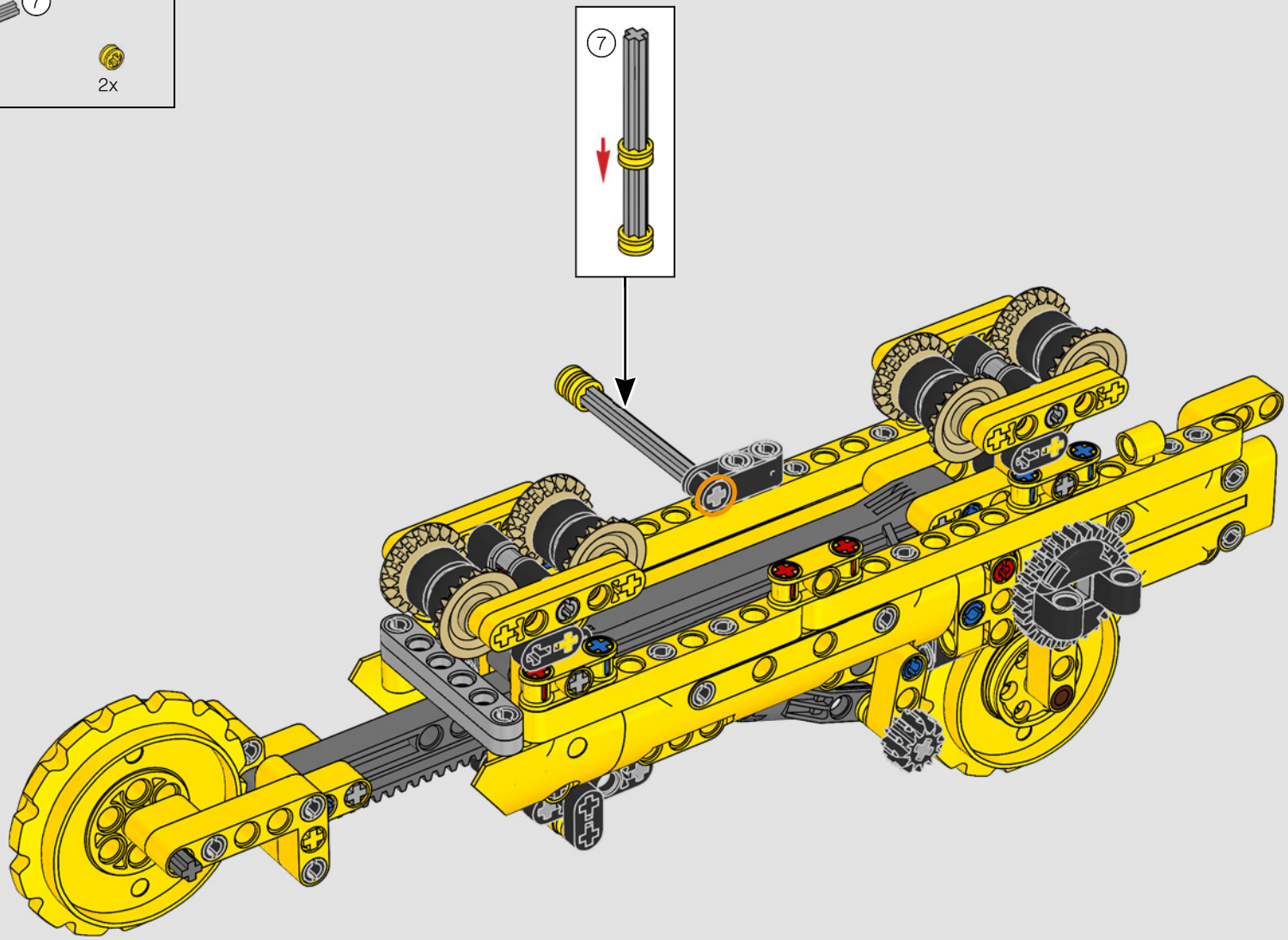

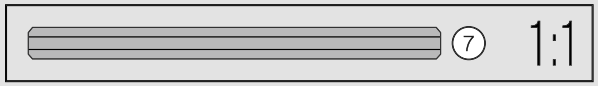

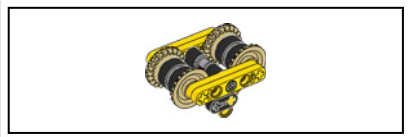

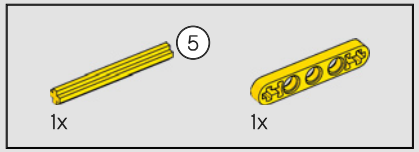

514

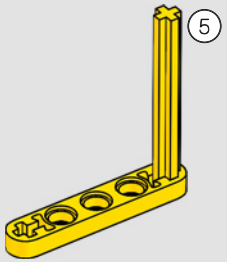

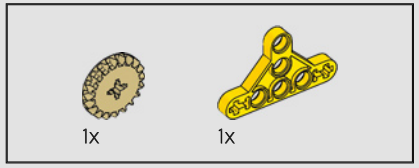

515

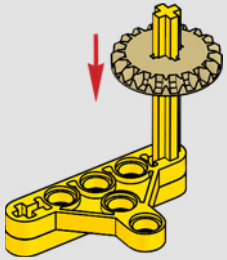

516

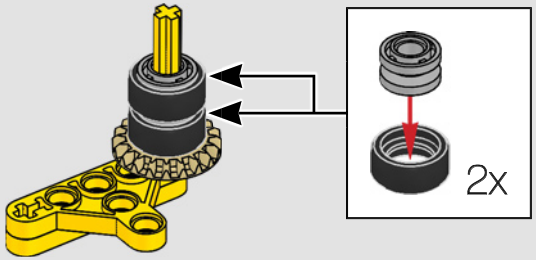

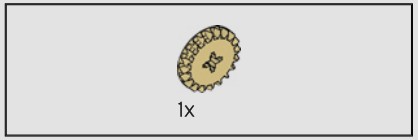

517

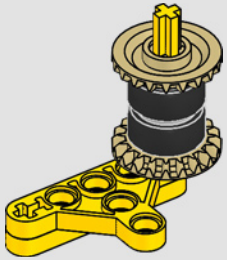

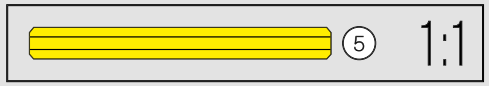

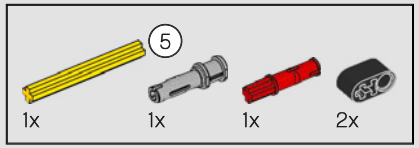

518

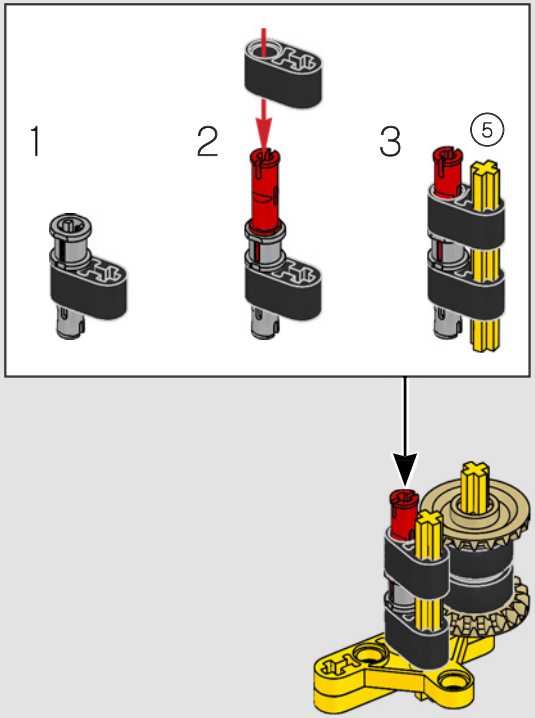

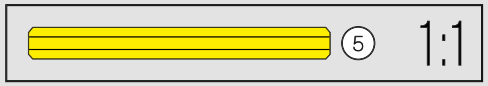

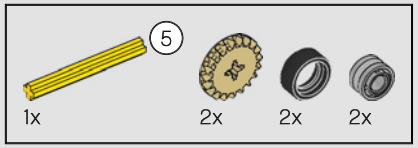

519

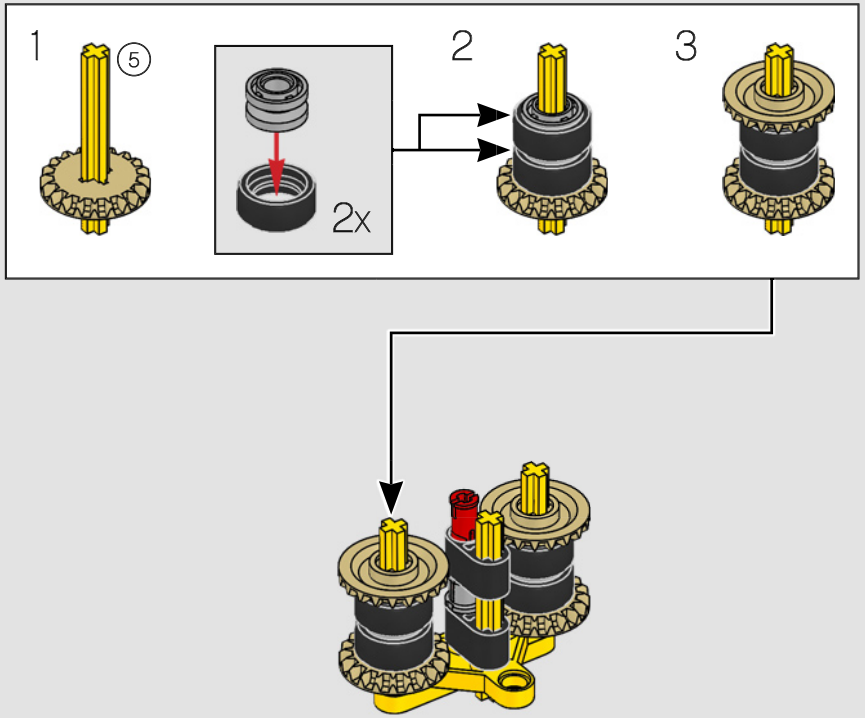

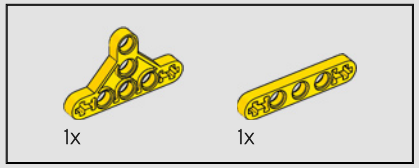

520

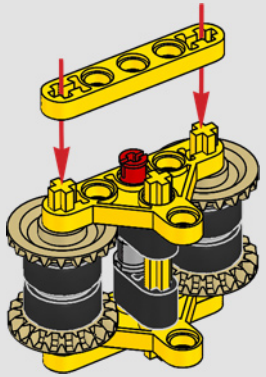

521

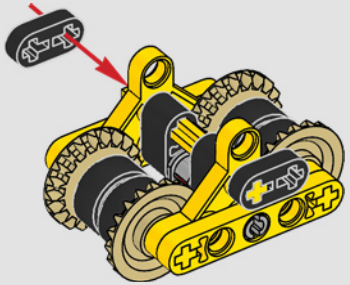

522

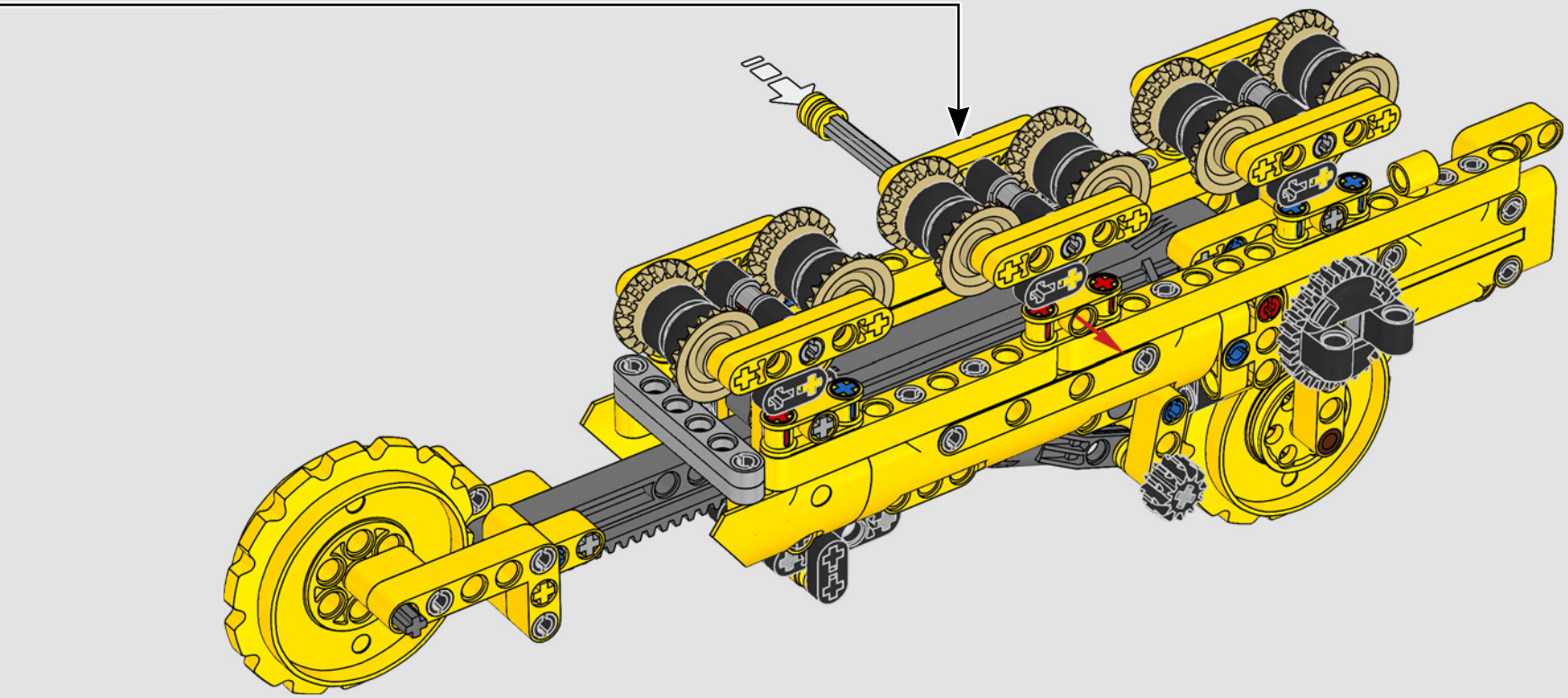

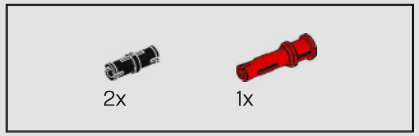

523

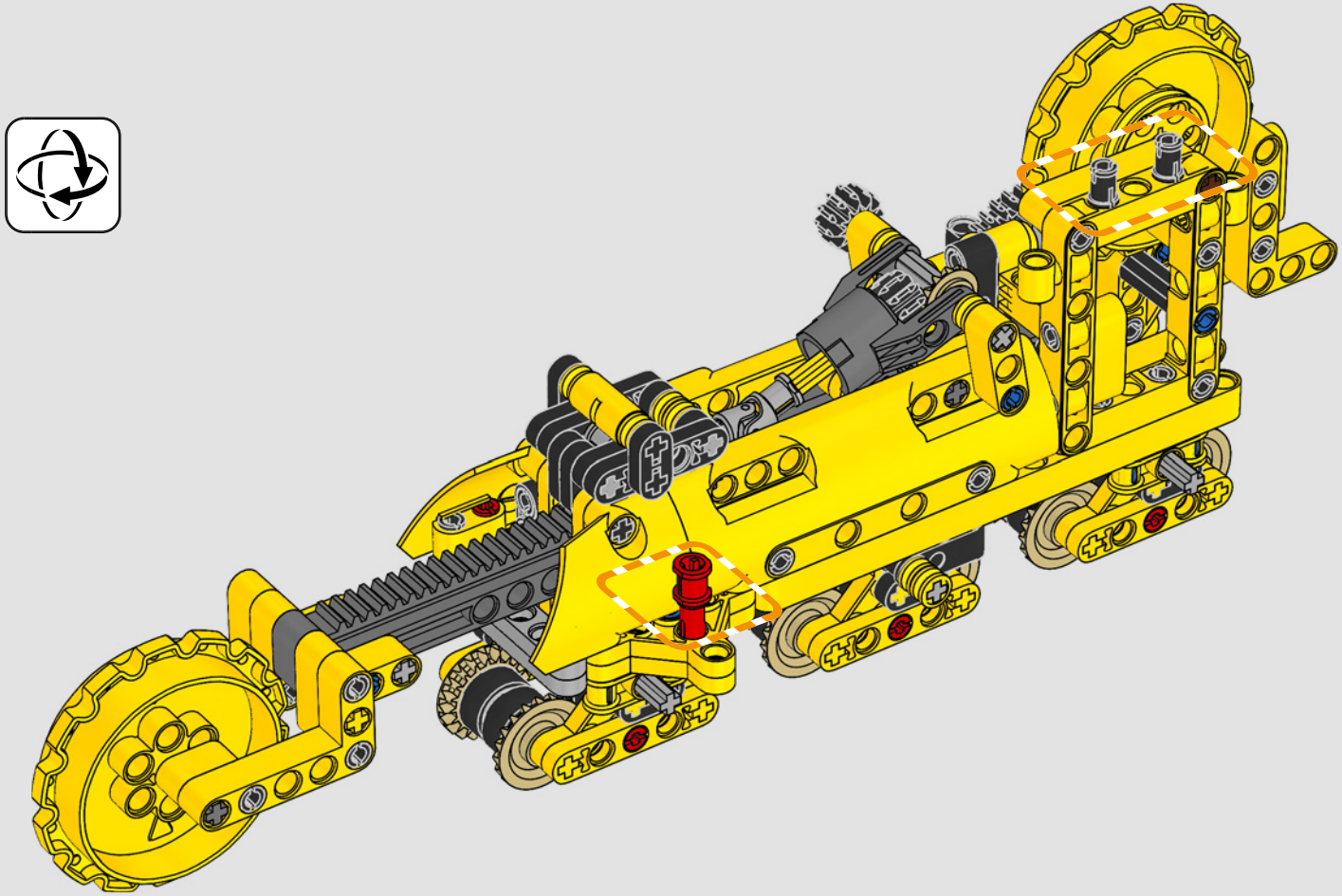

524

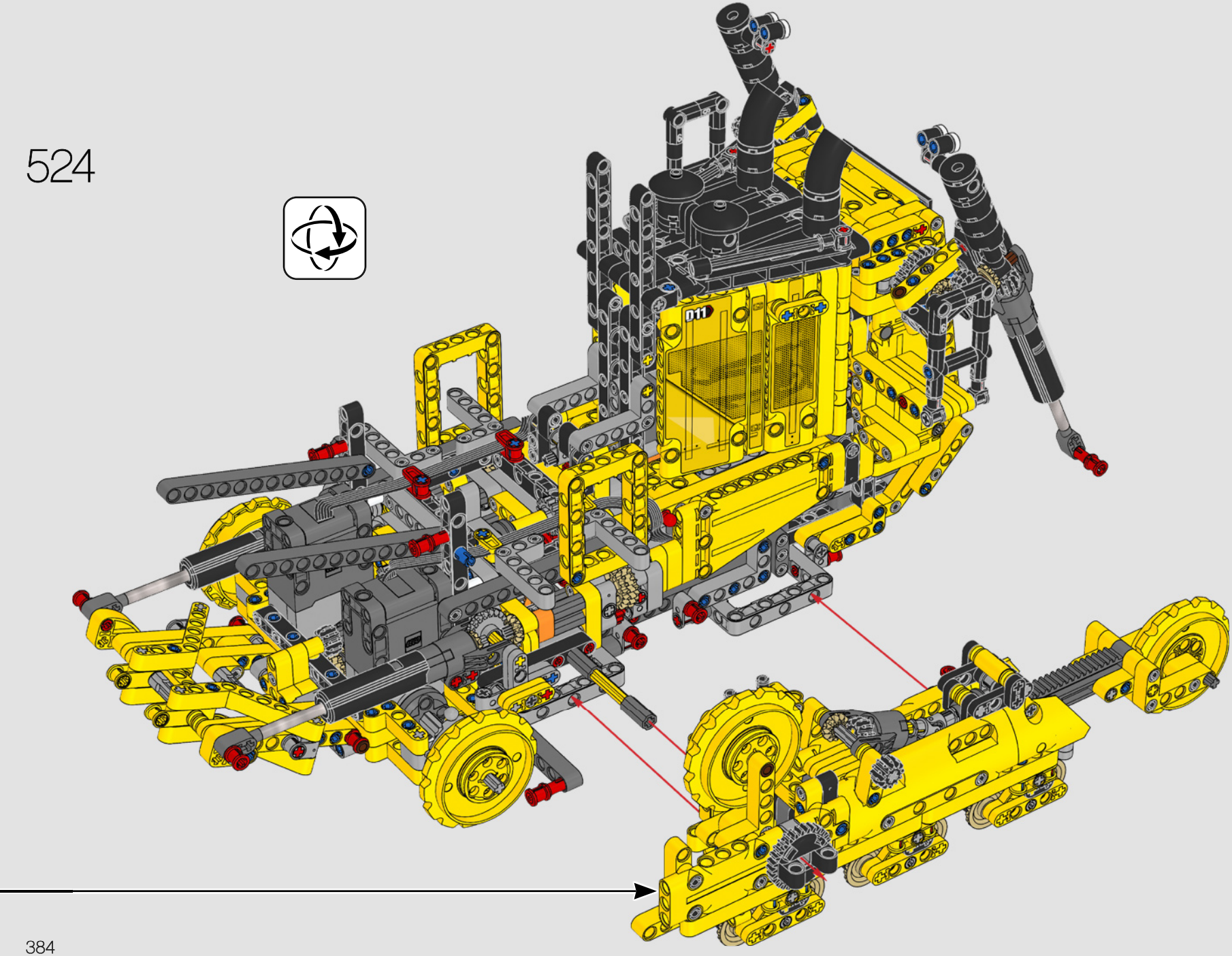

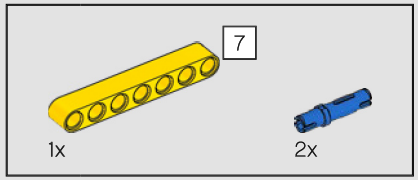

525

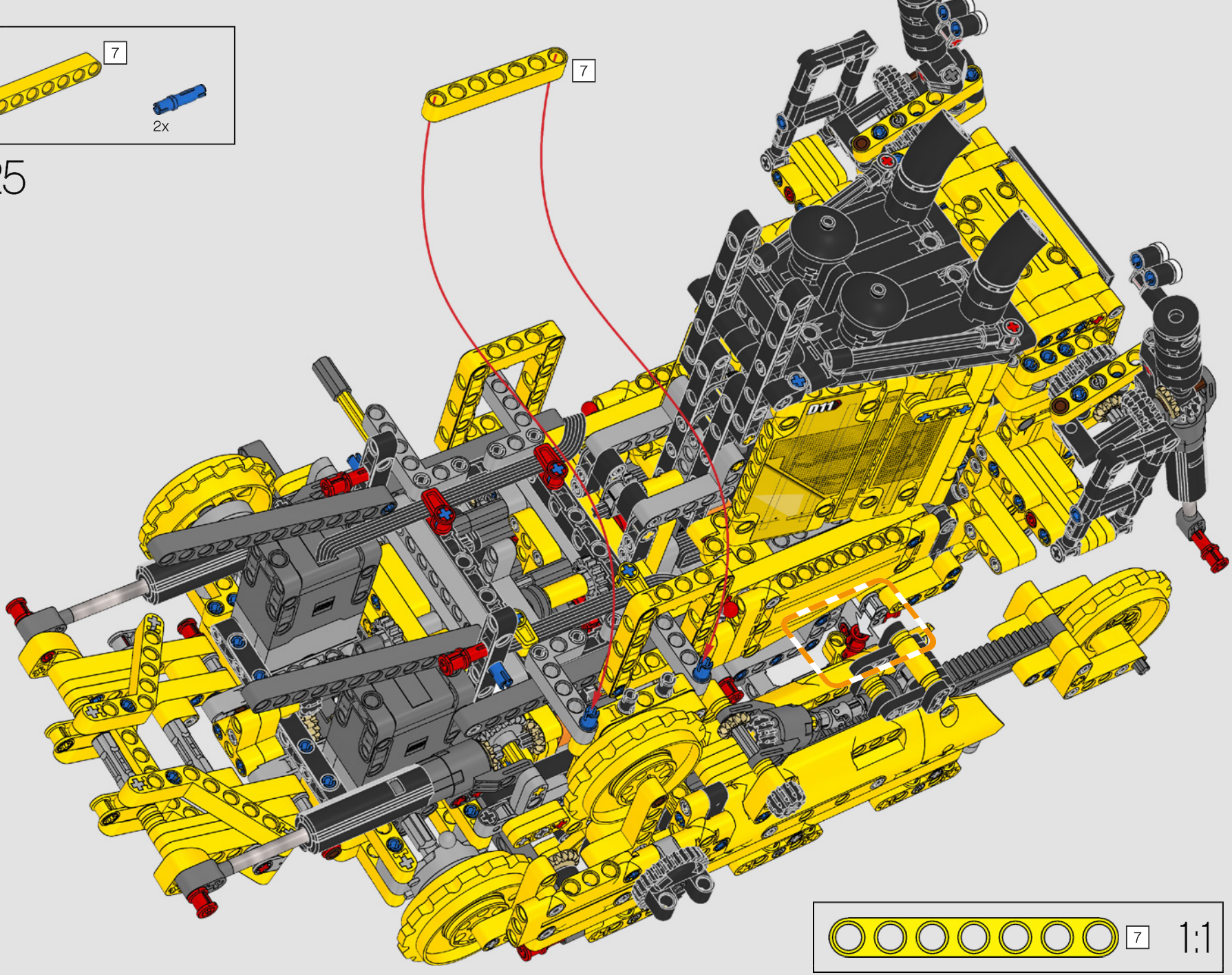

526

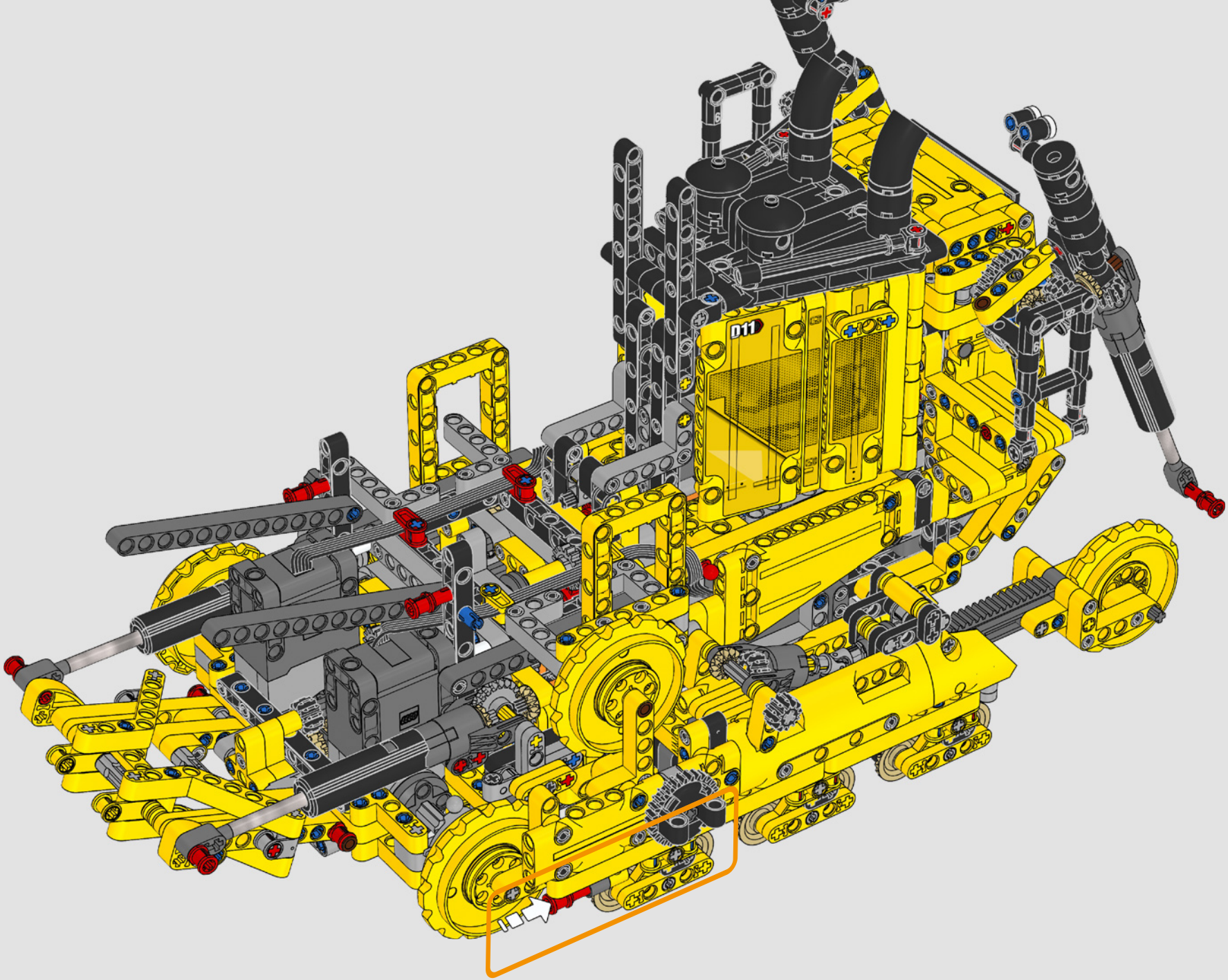

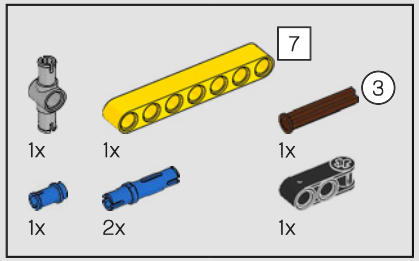

527

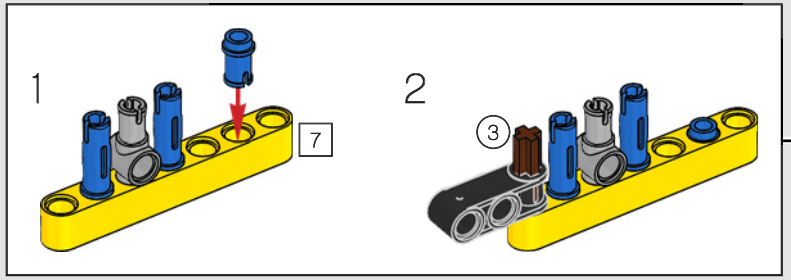

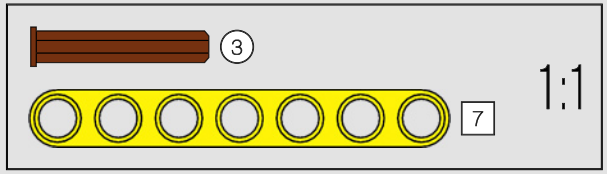

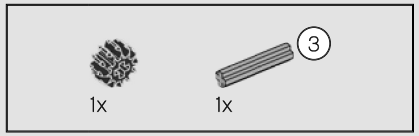

528

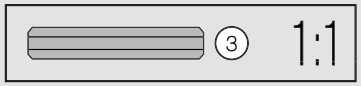

529

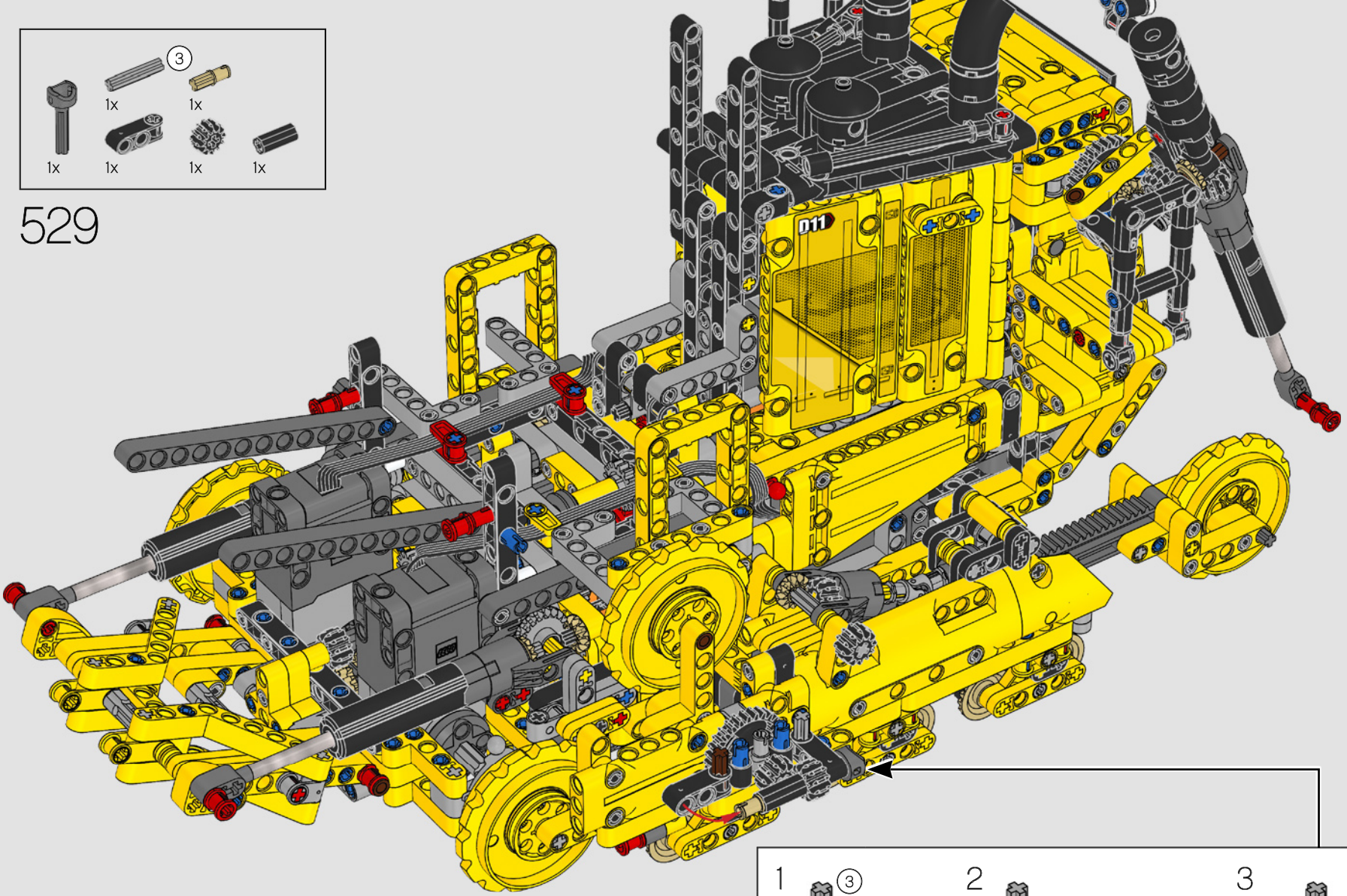

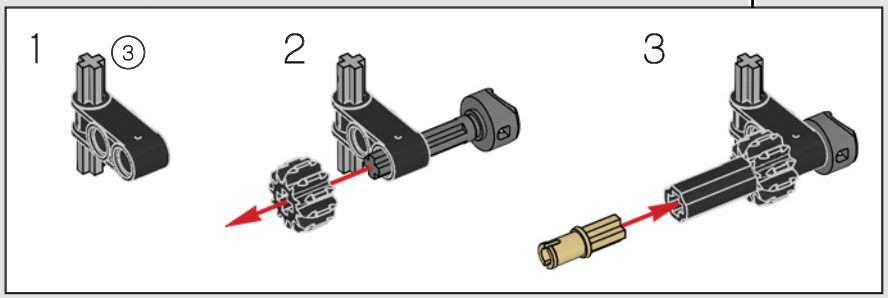

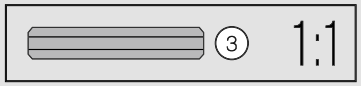

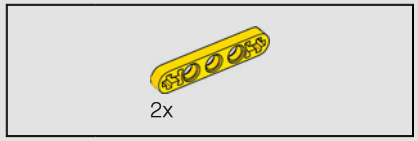

530

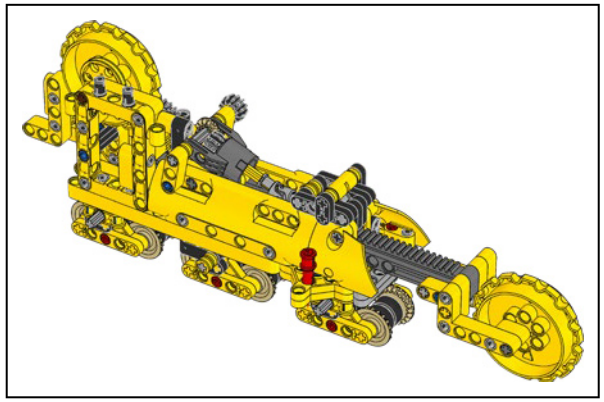

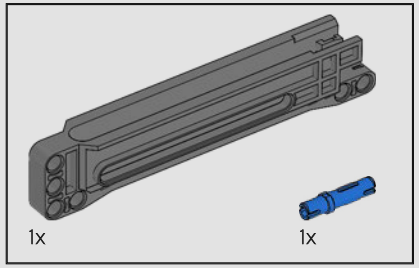

531

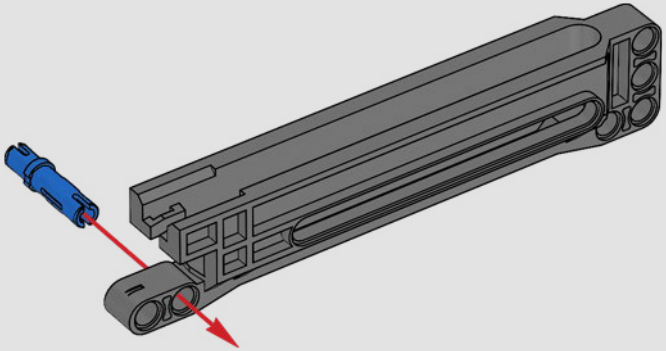

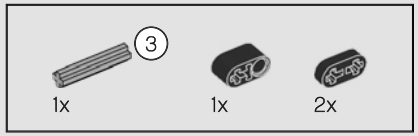

532

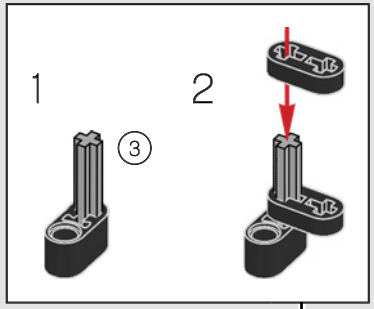

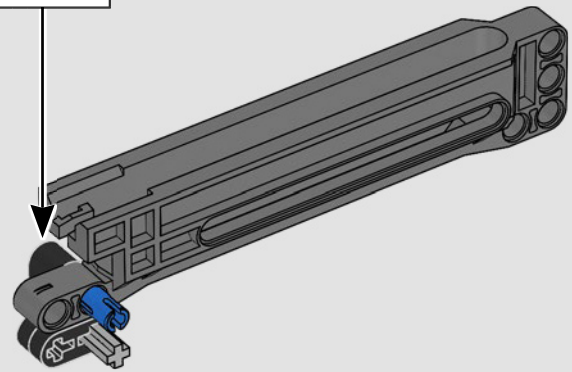

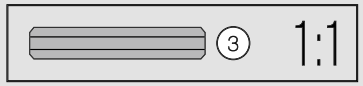

533

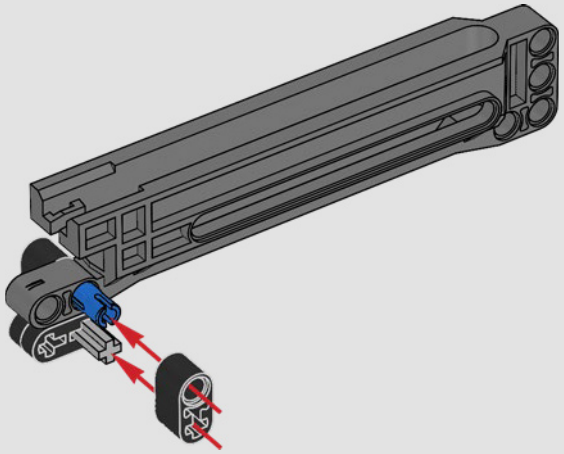

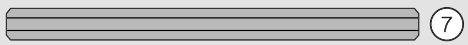

1:1

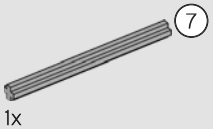

534

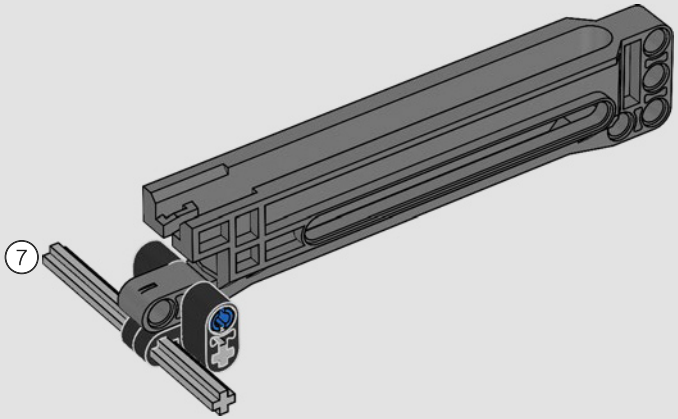

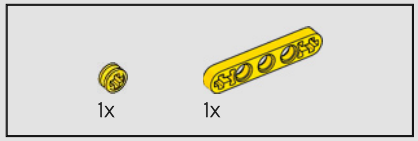

535

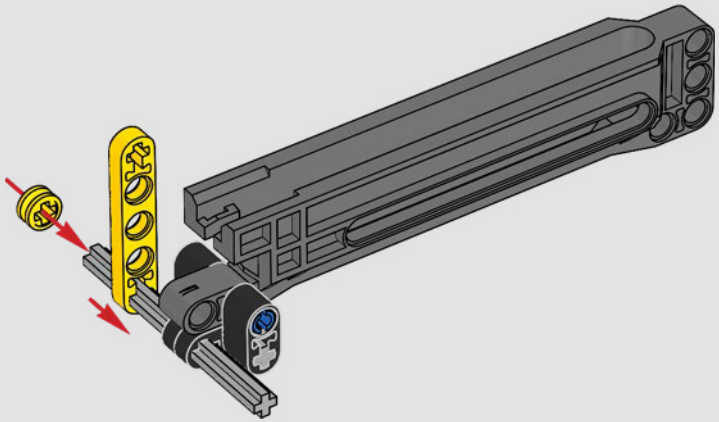

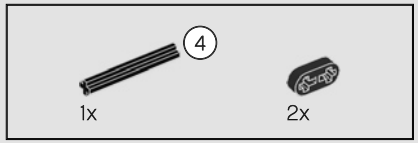

536

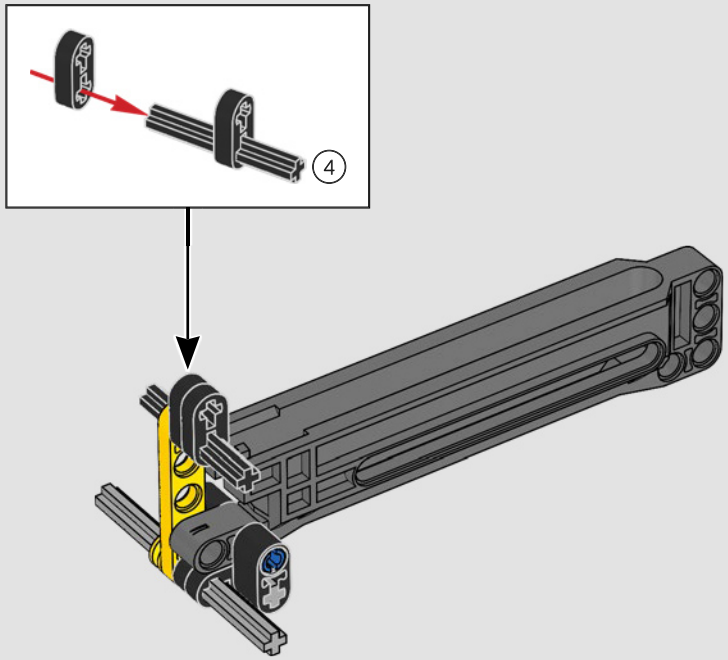

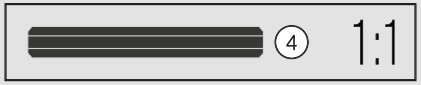

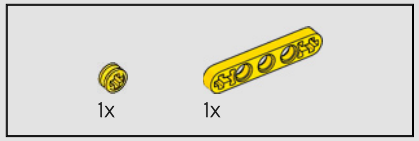

537

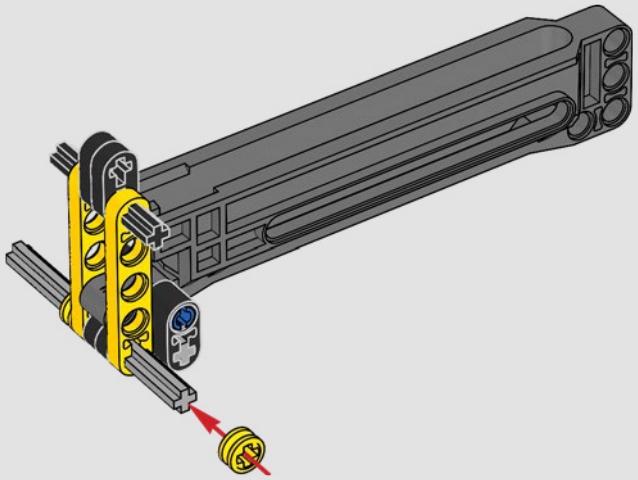

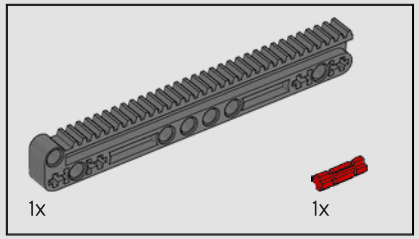

538

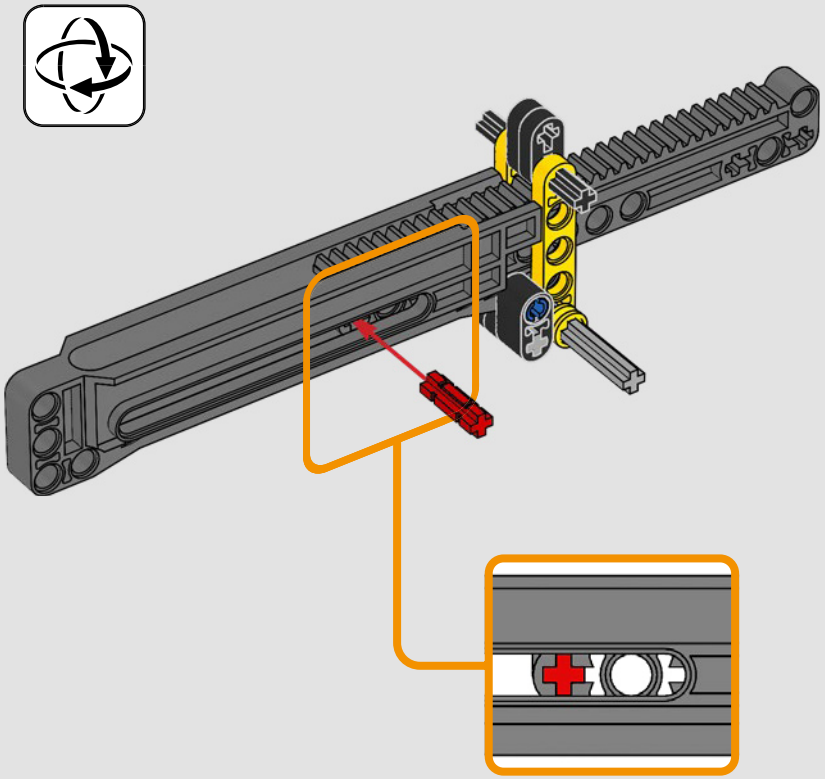

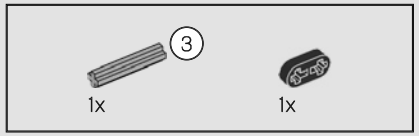

539

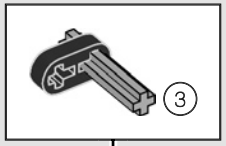

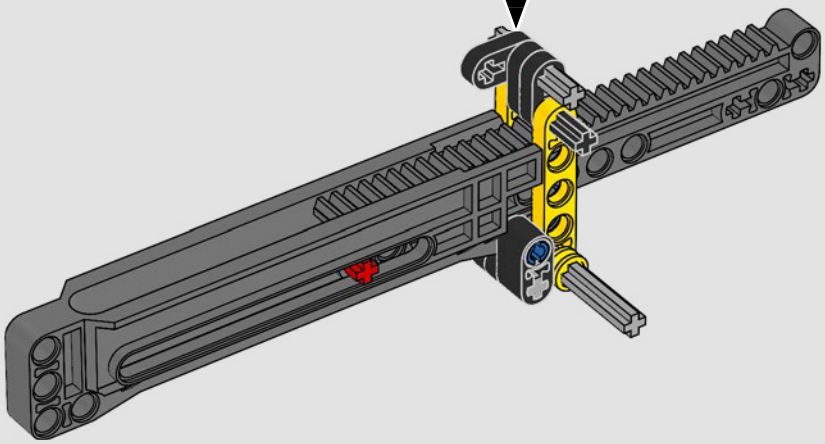

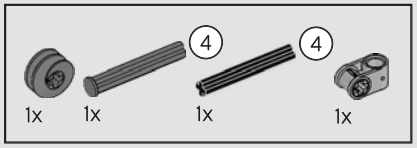

540

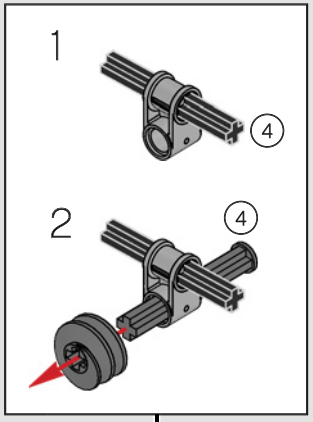

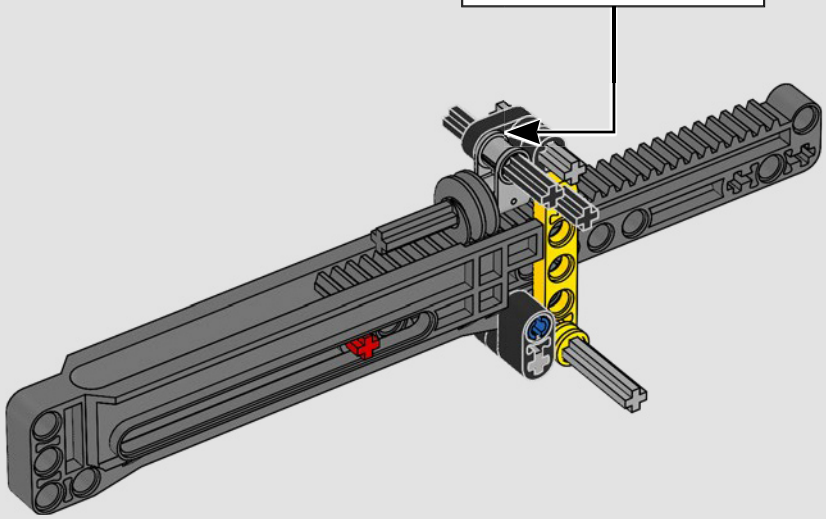

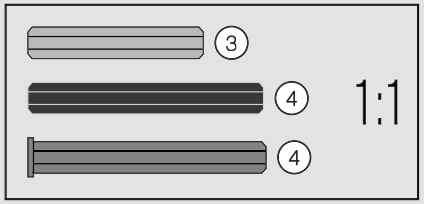

1x

541

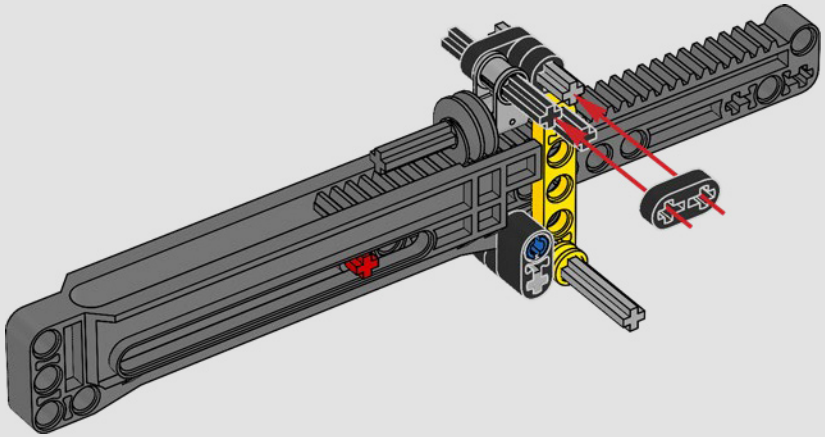

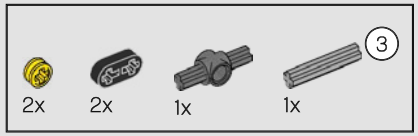

542

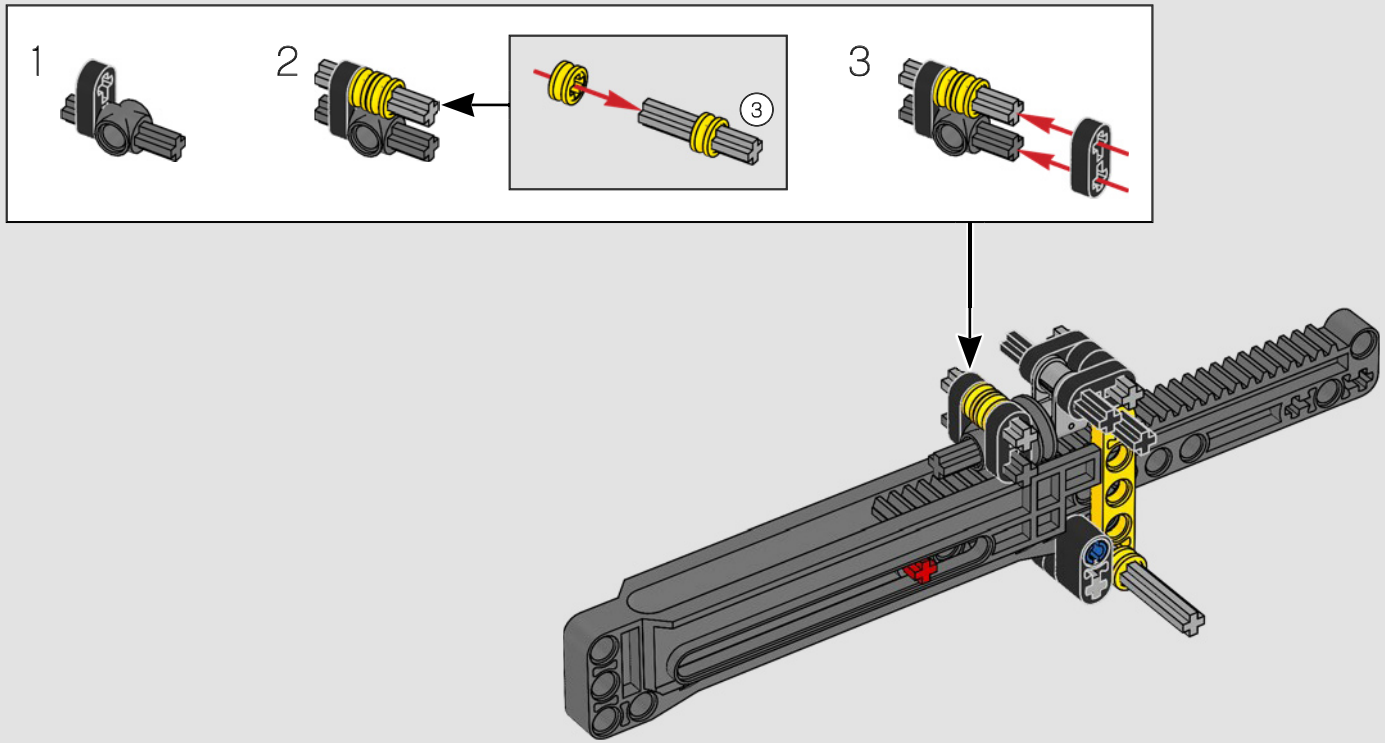

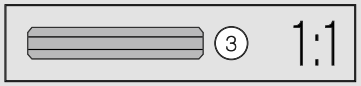

543

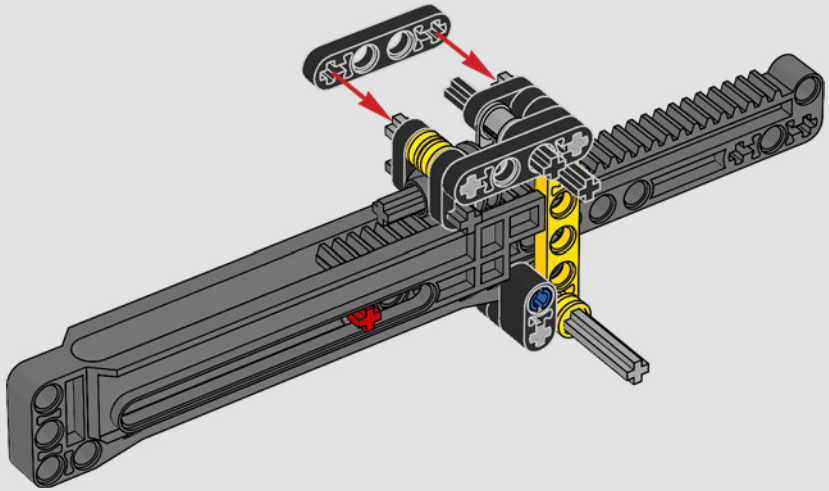

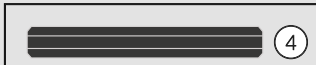

1:1

544

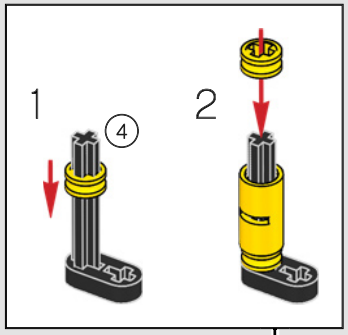

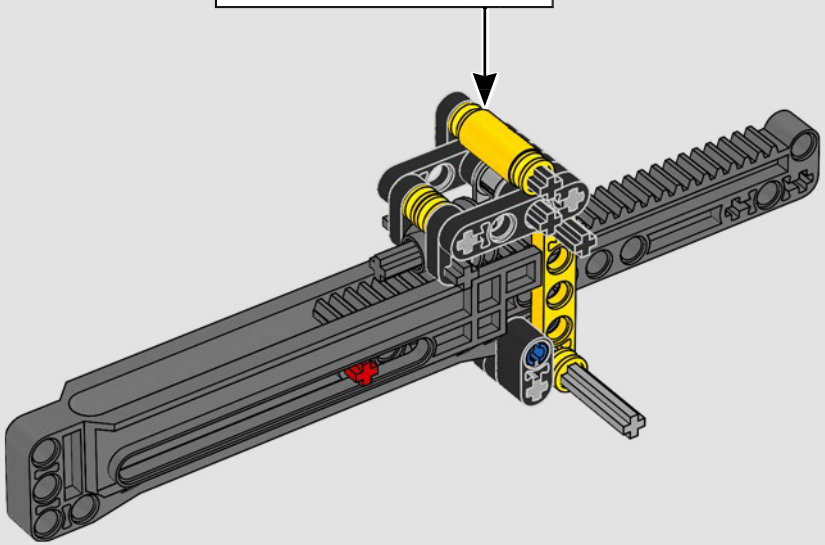

545

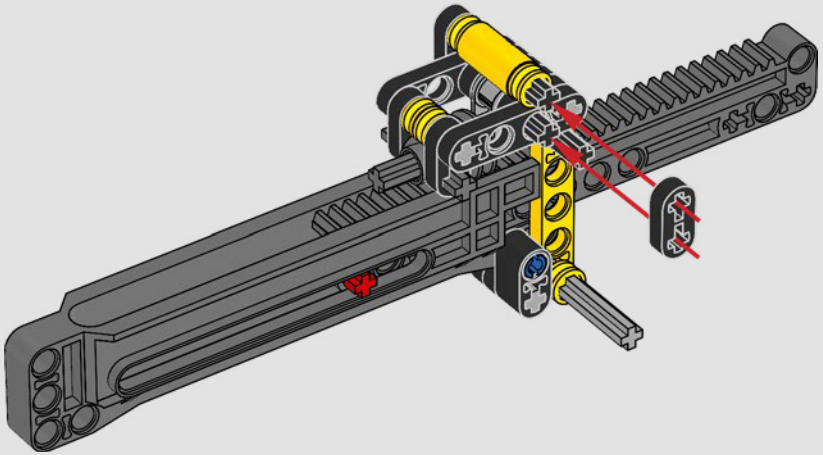

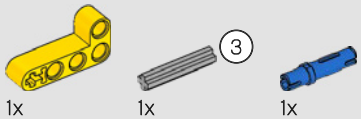

546

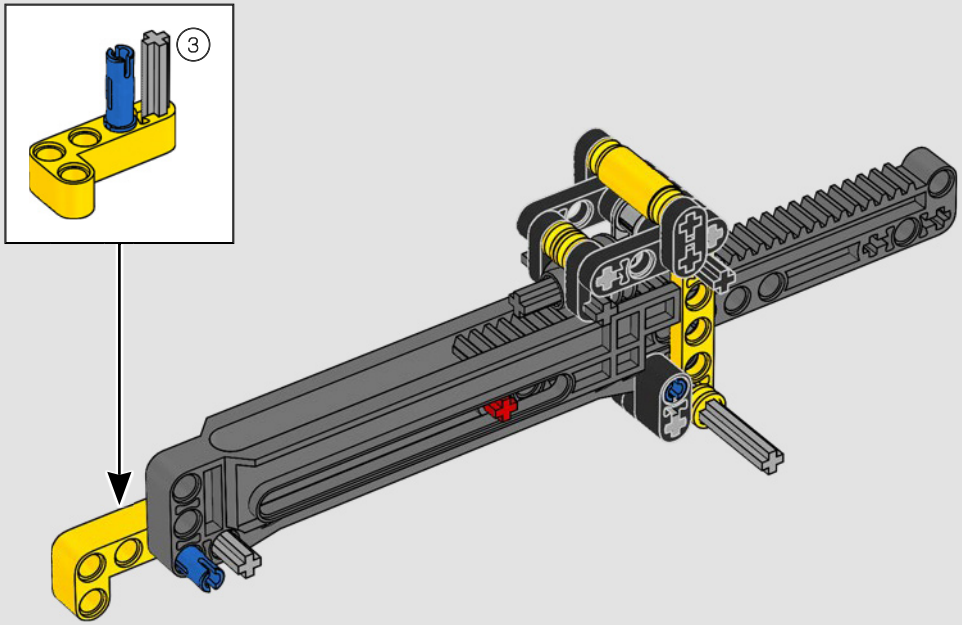

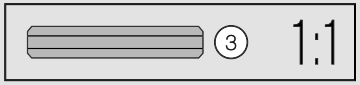

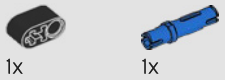

547

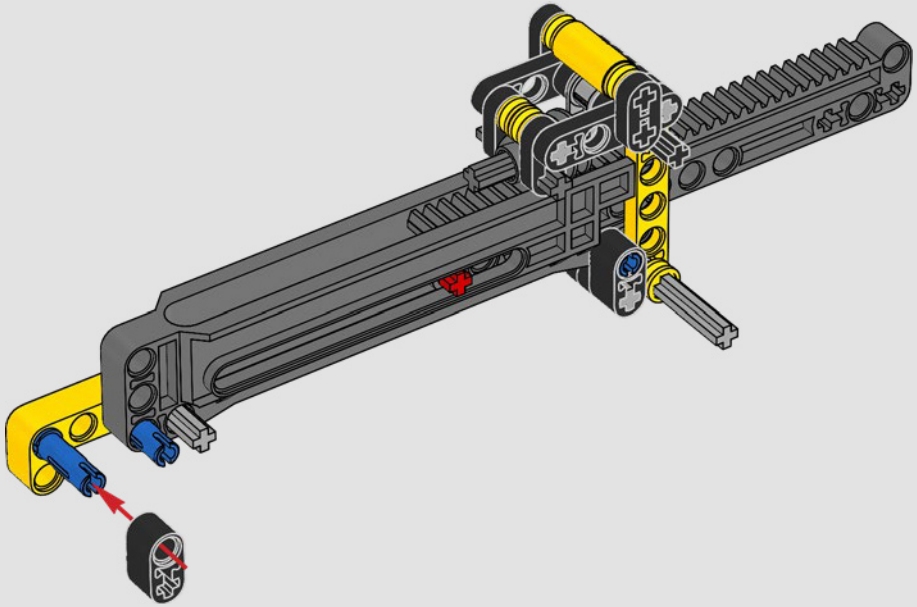

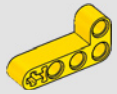

548

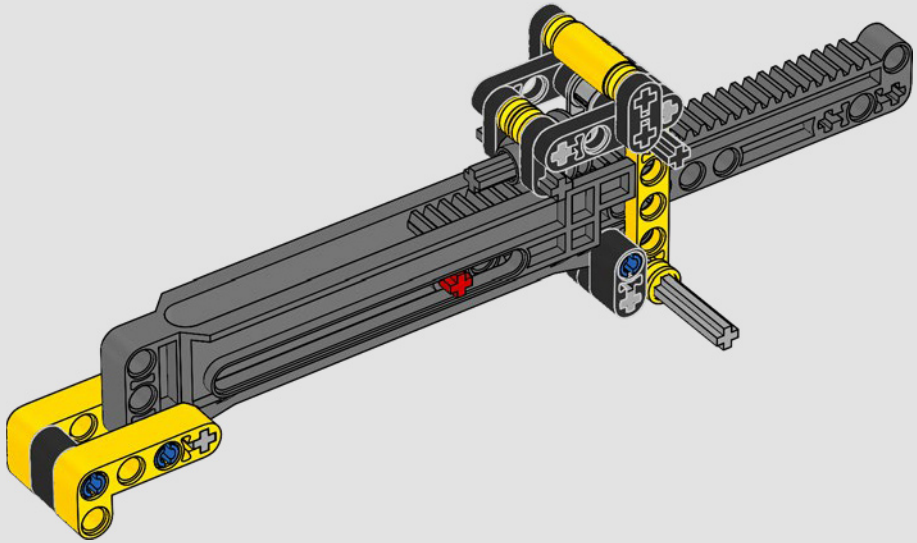

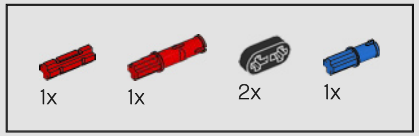

549

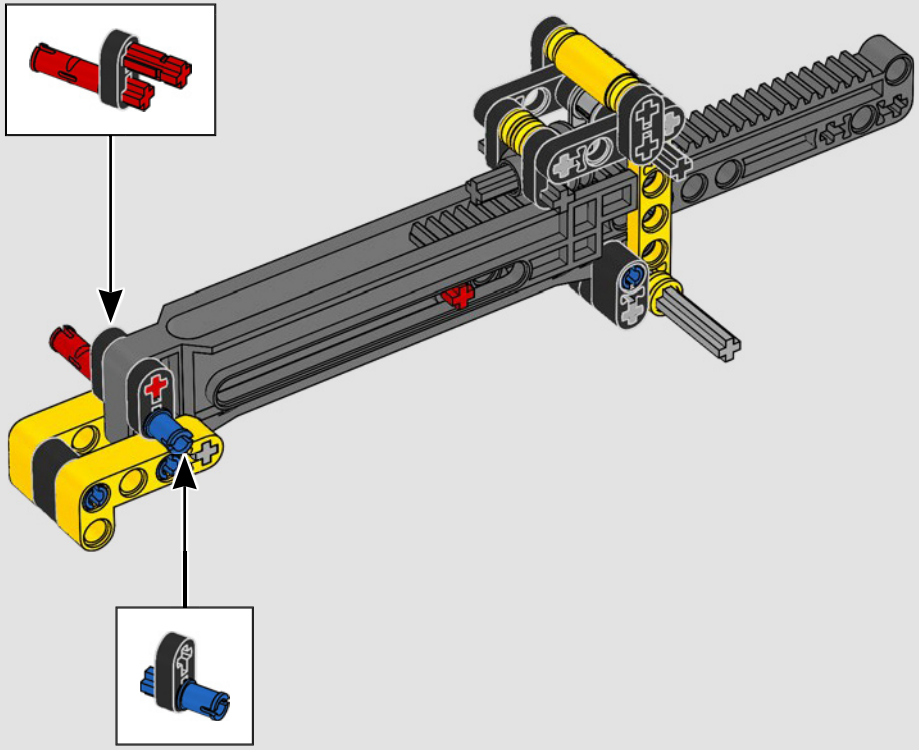

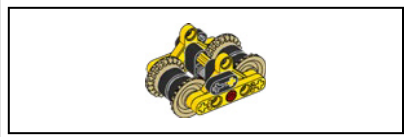

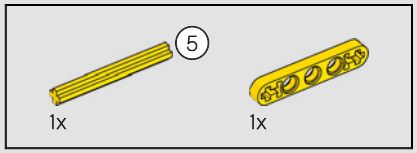

550

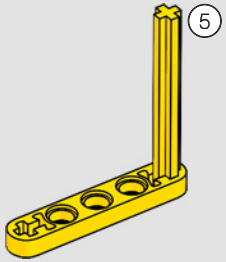

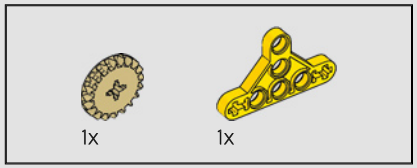

551

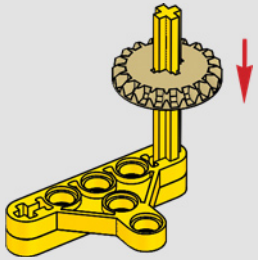

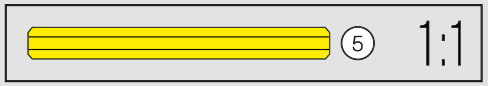

552

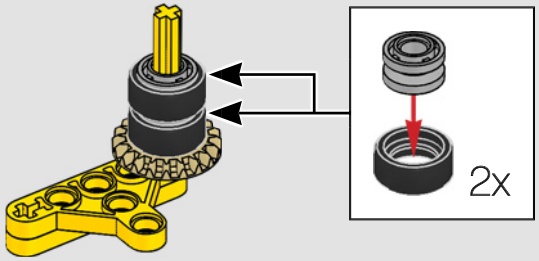

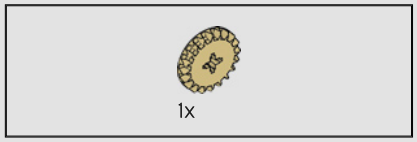

553

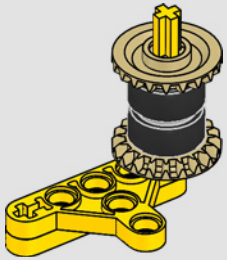

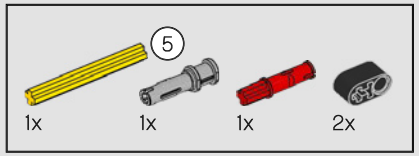

554

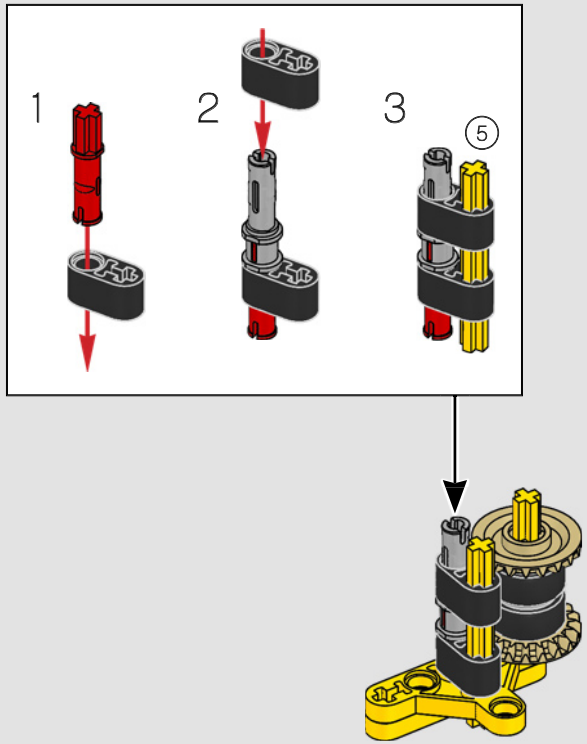

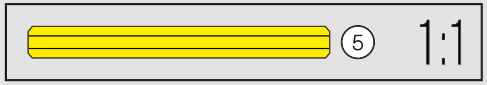

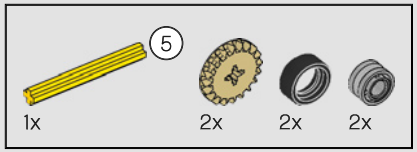

555

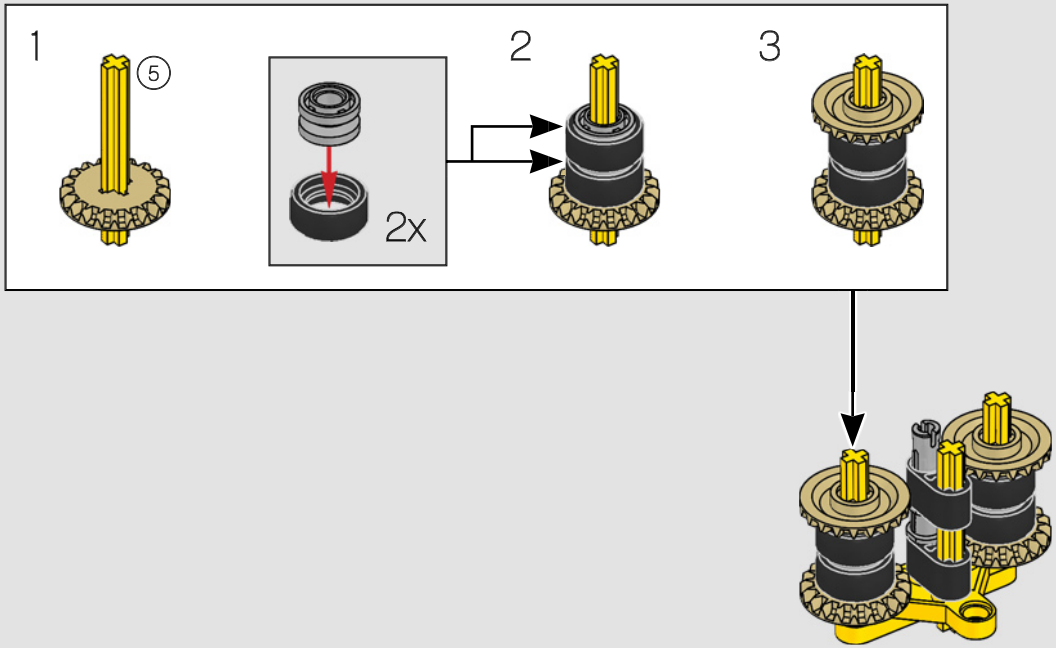

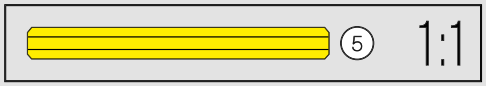

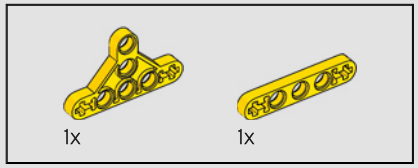

556

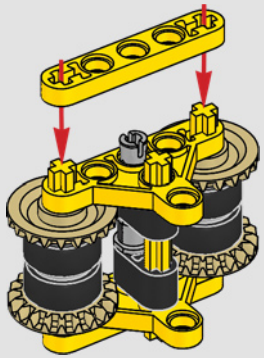

557

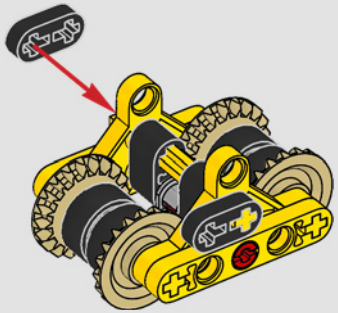

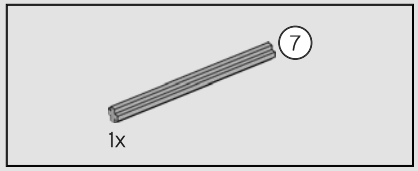

558

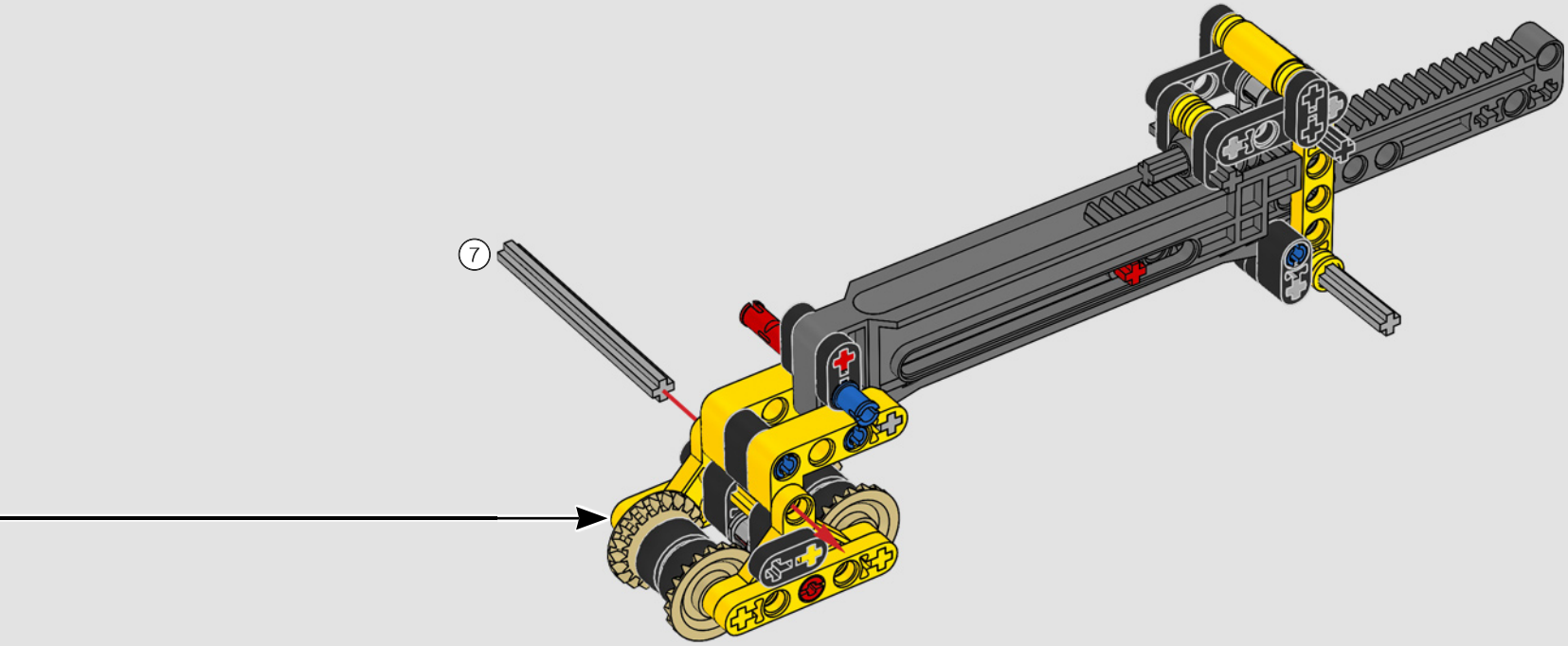

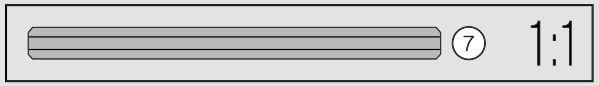

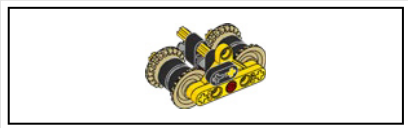

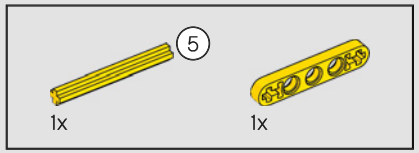

559

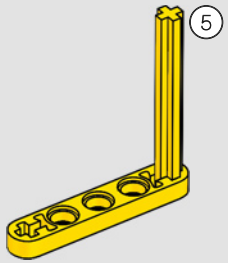

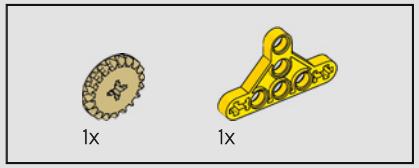

560

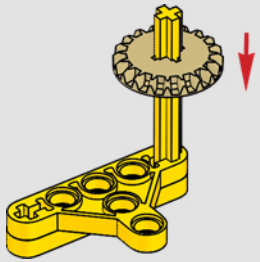

561

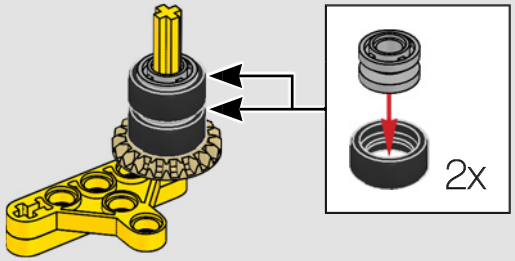

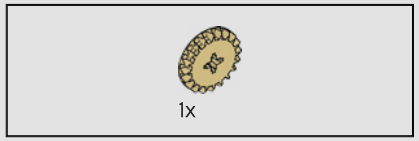

562

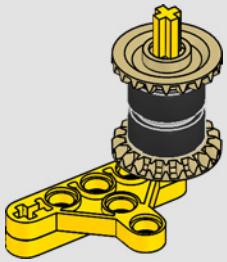

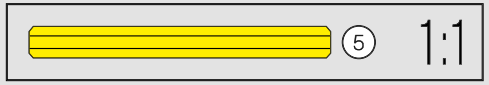

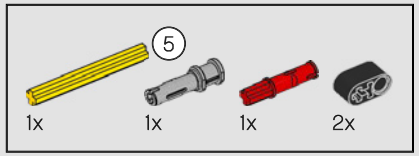

563

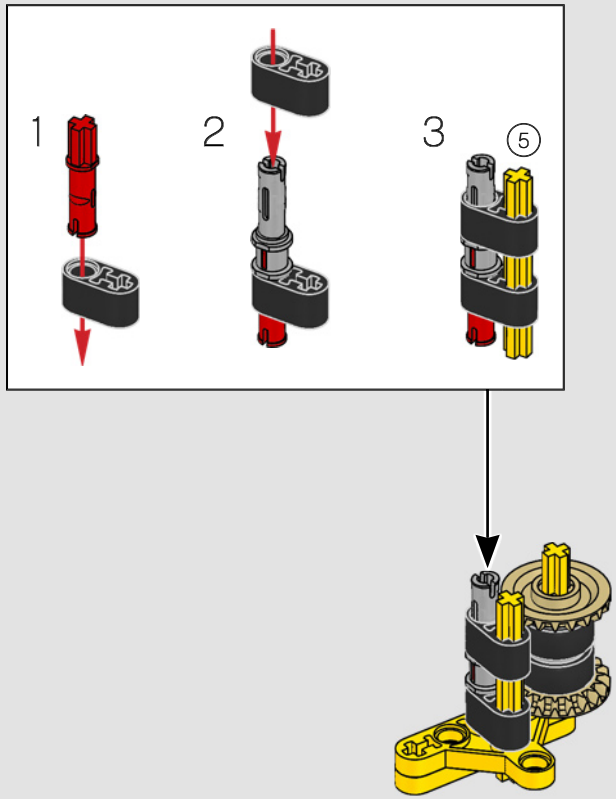

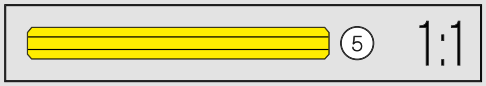

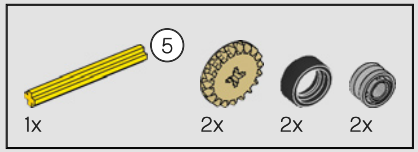

564

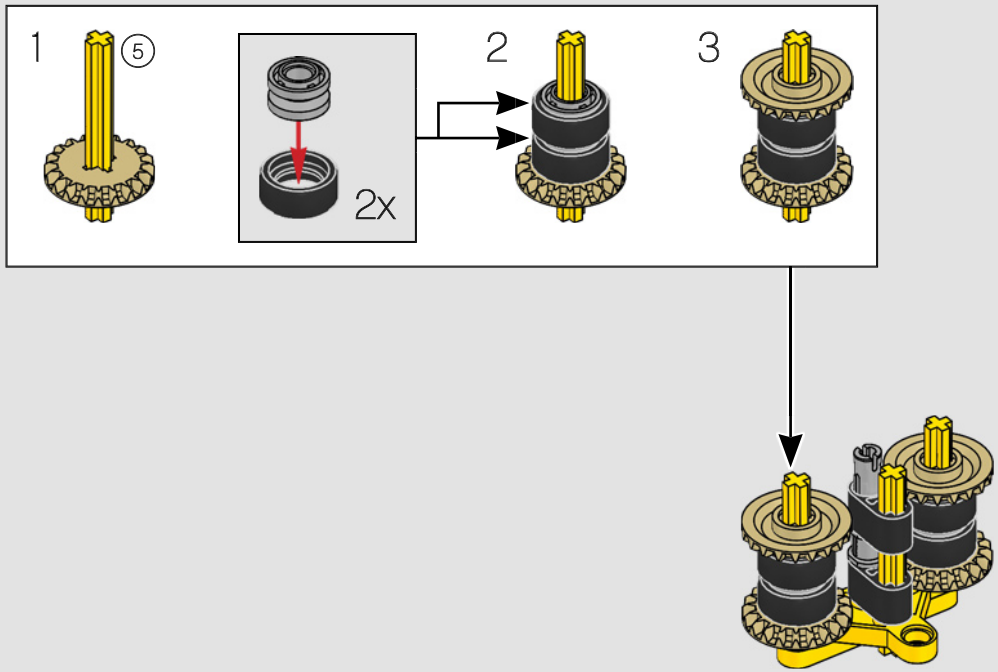

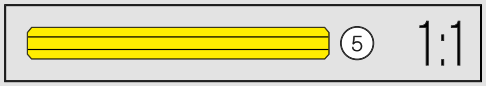

1x

565

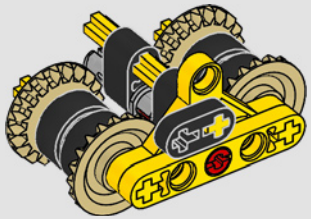

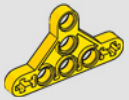

1x

566

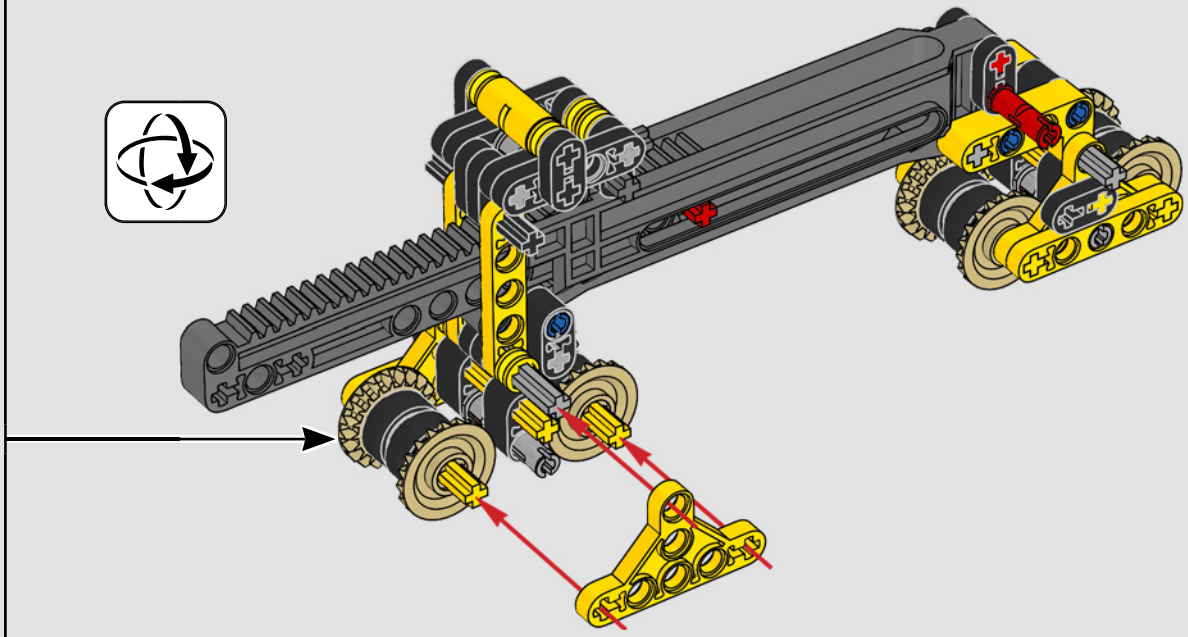

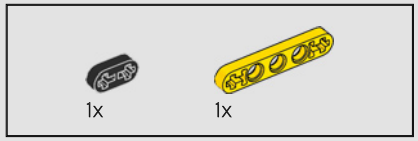

567

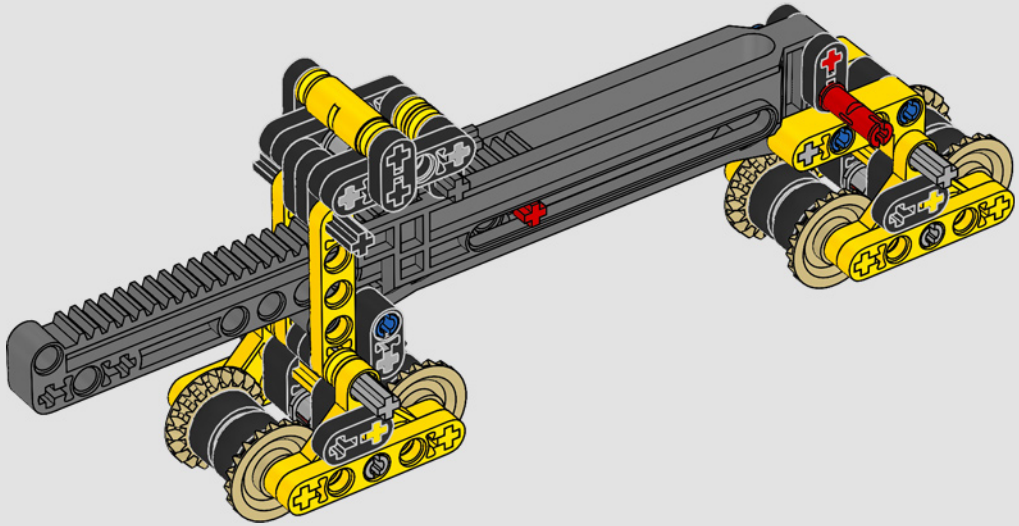

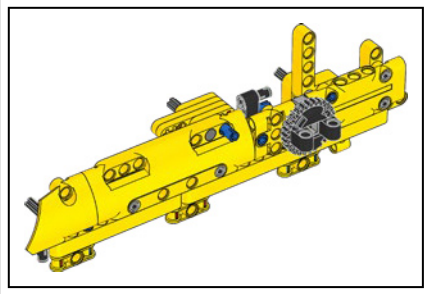

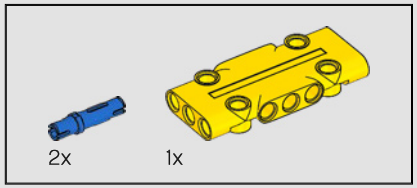

568

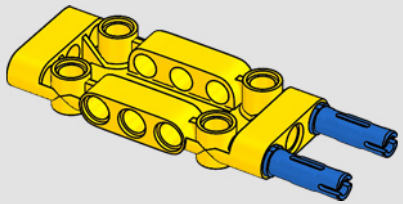

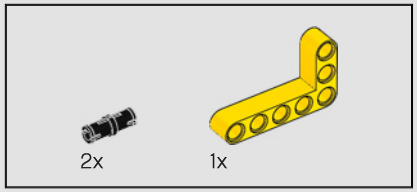

569

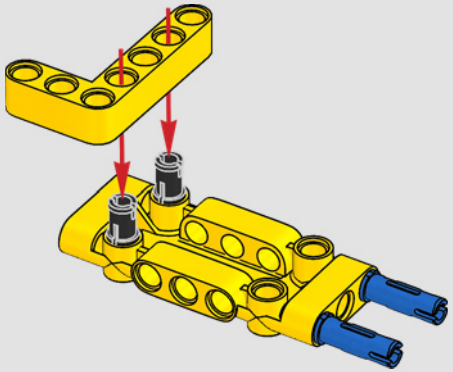

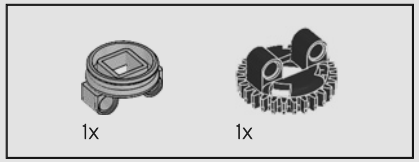

570

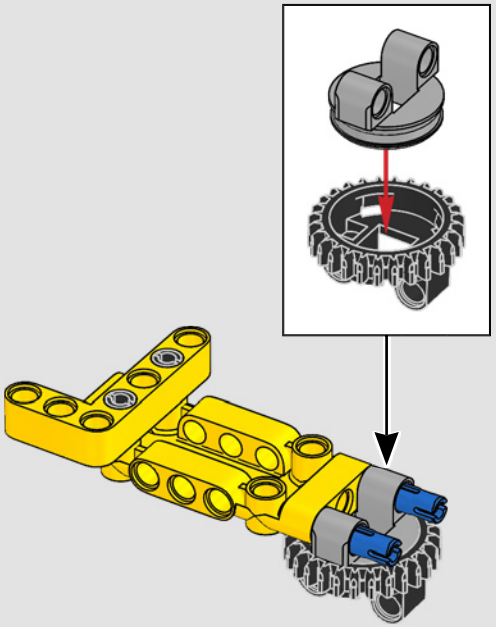

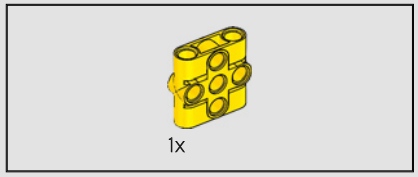

571

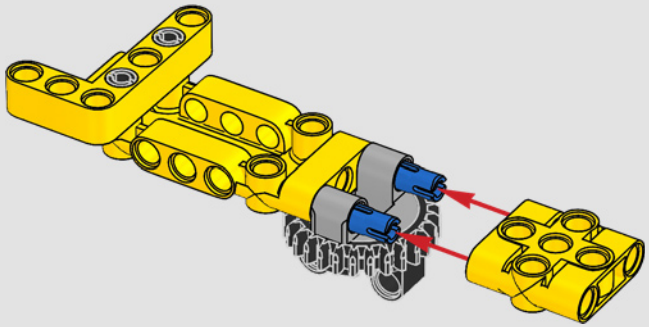

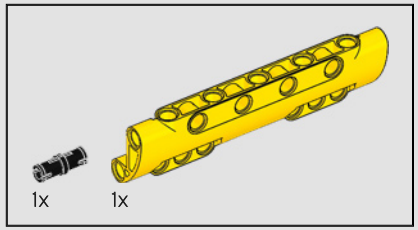

572

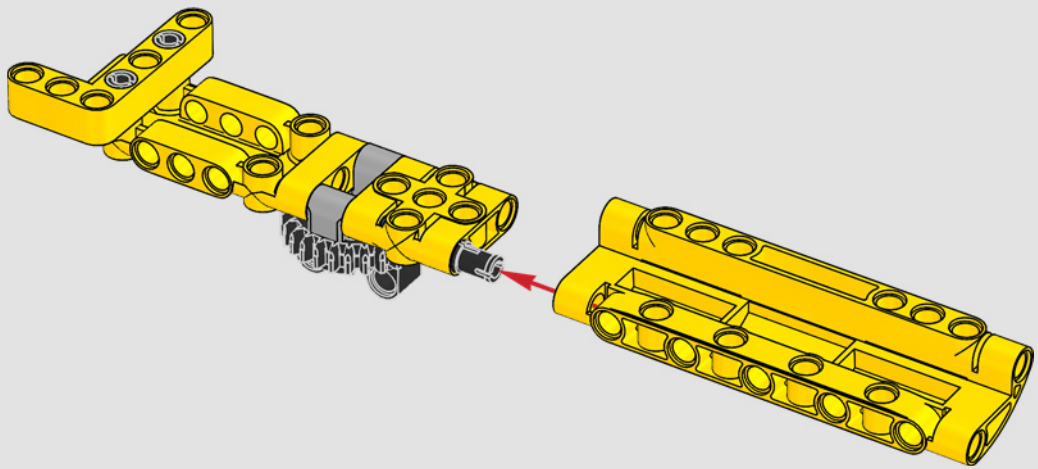

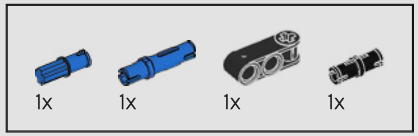

573

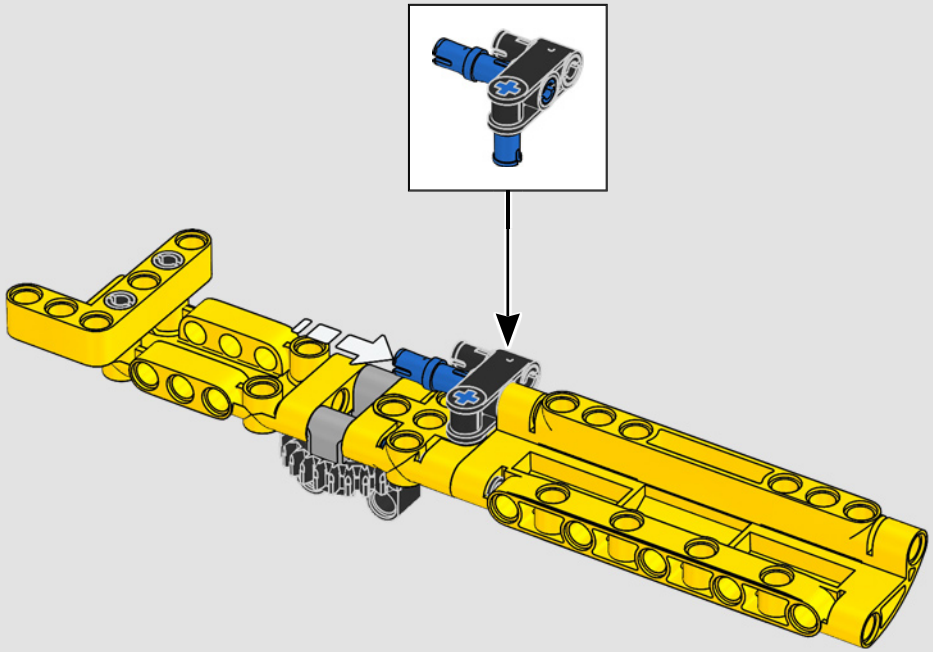

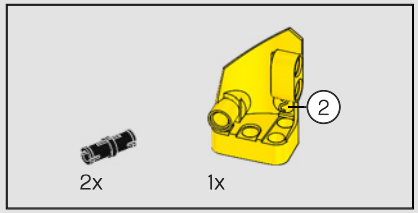

574

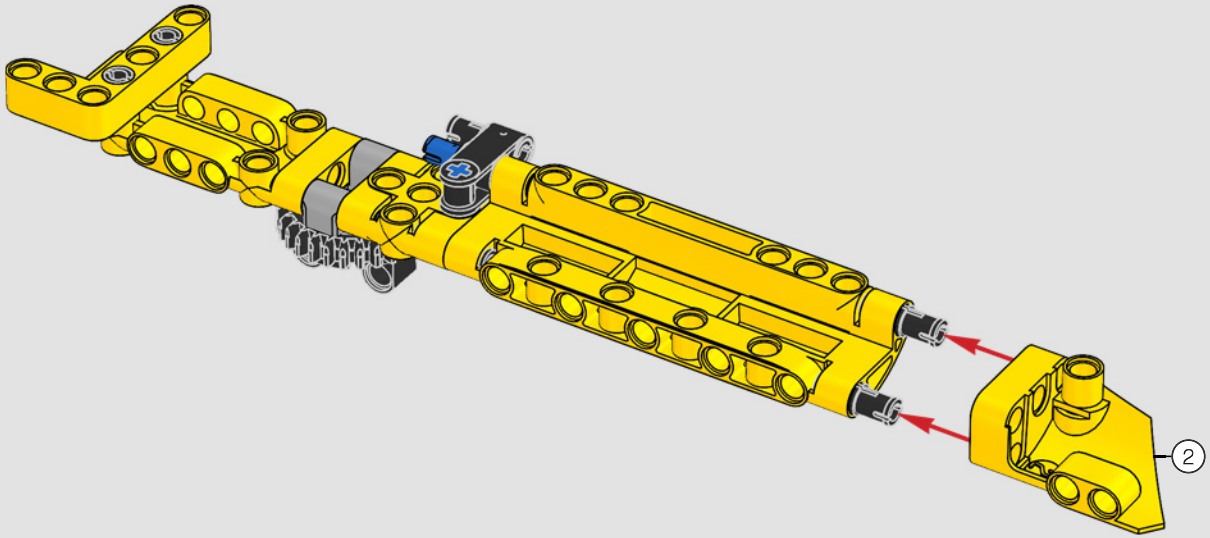

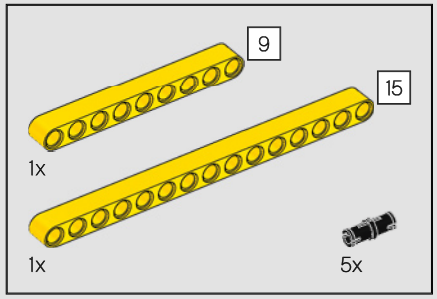

575

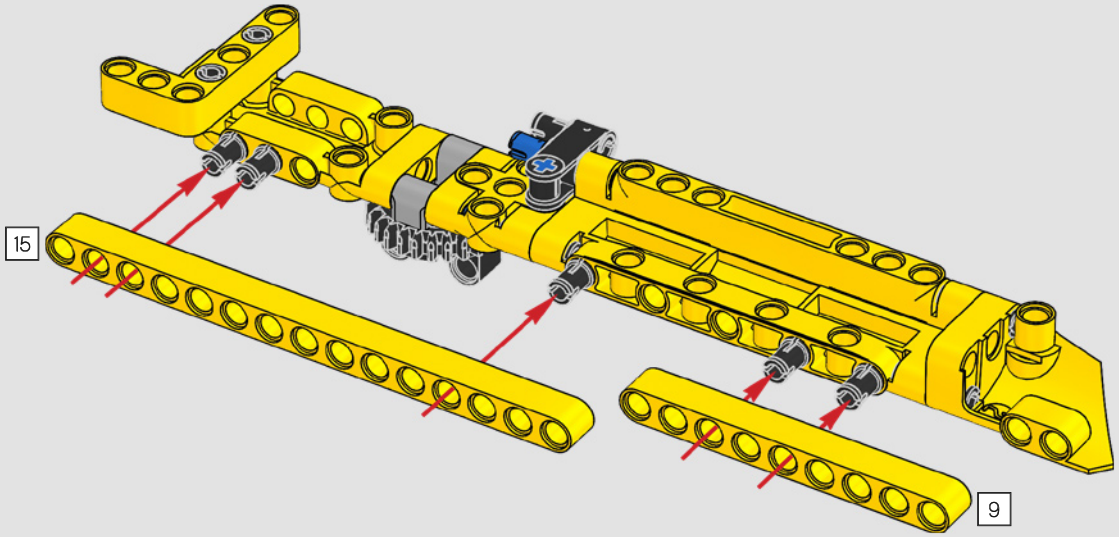

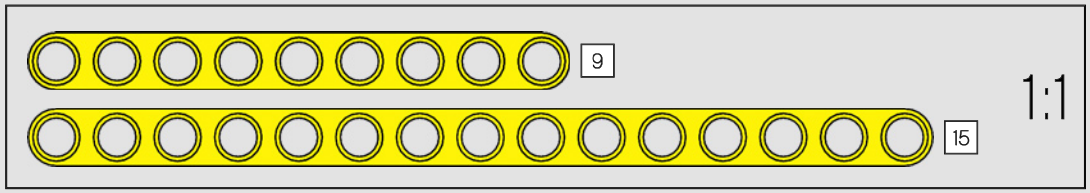

576

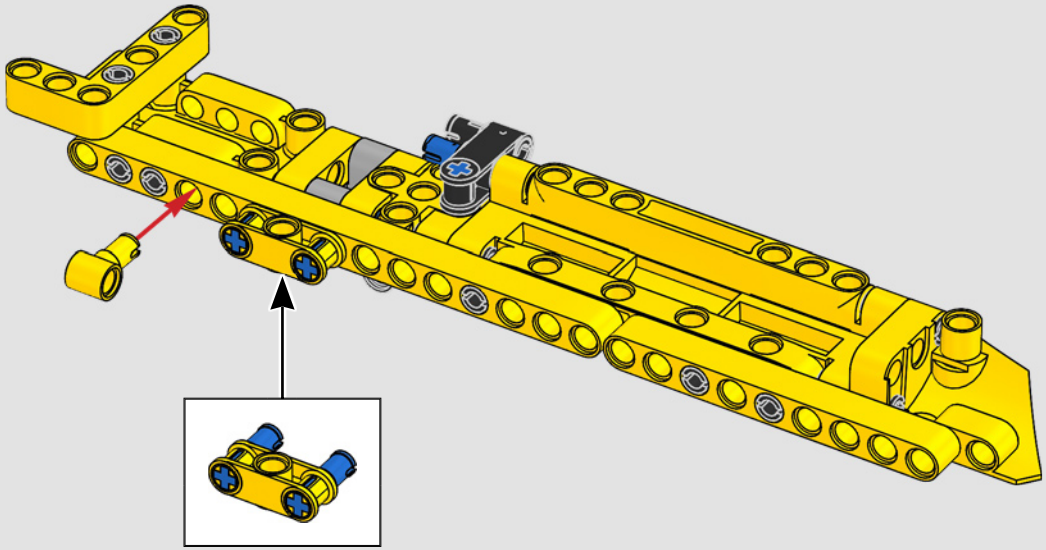

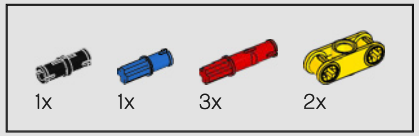

577

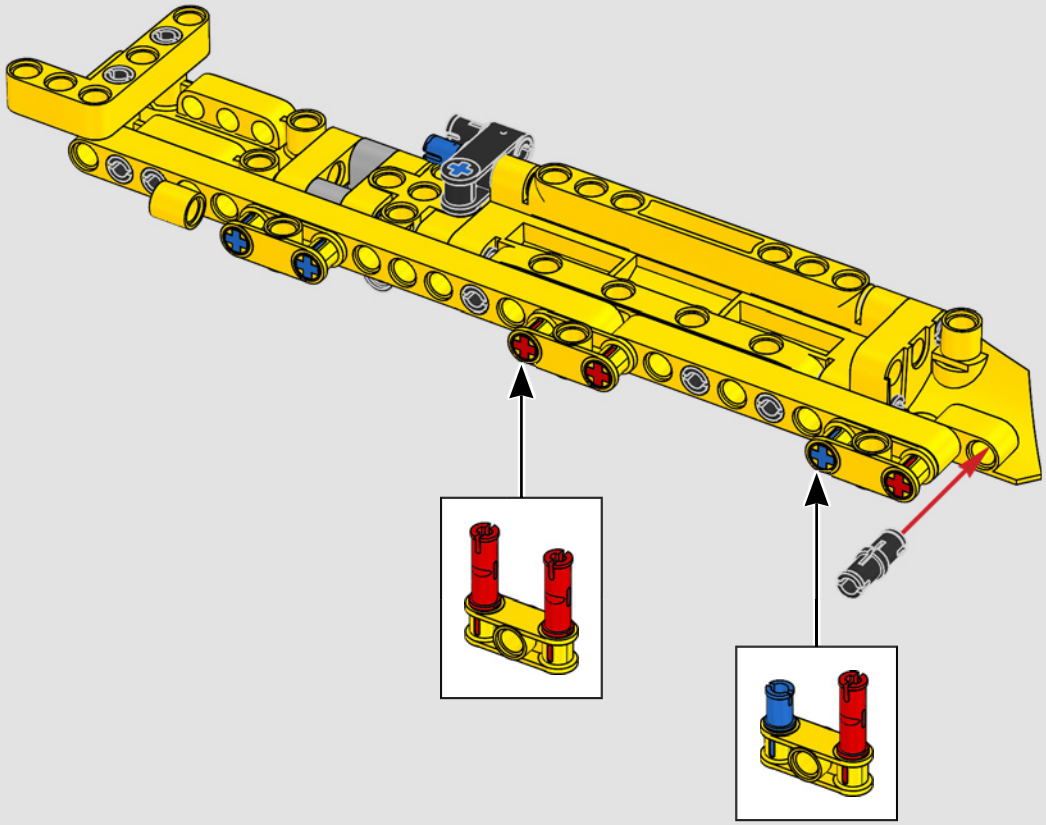

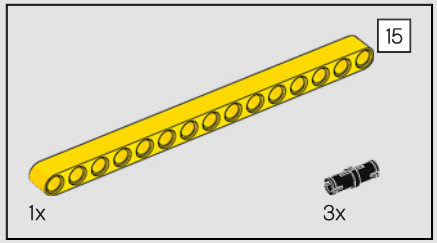

578

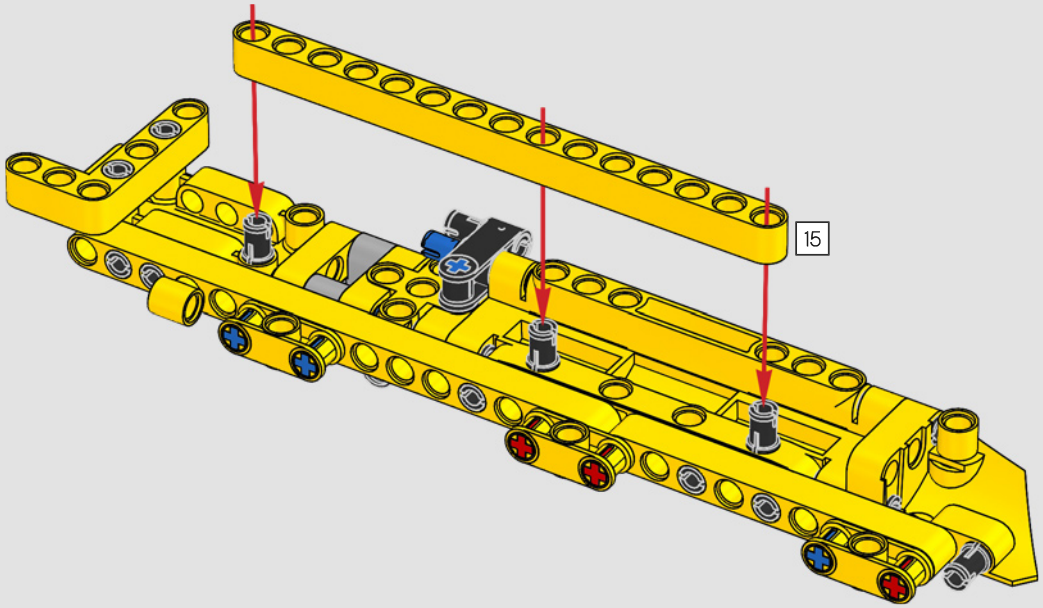

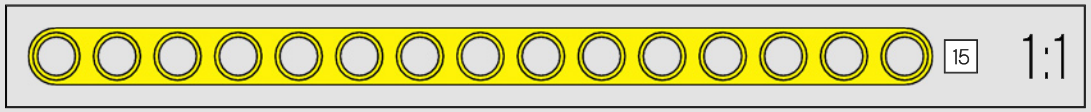

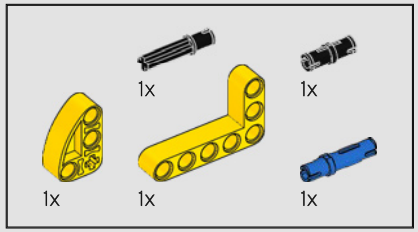

579

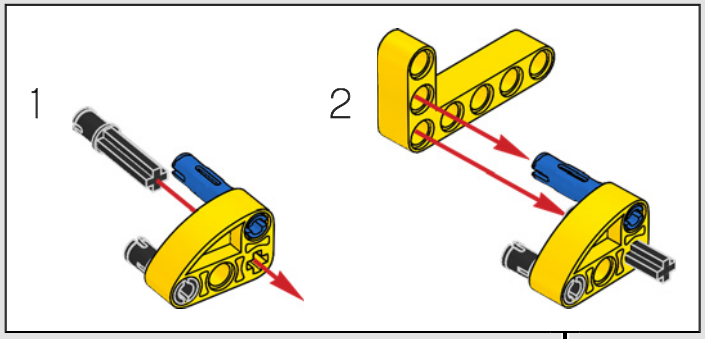

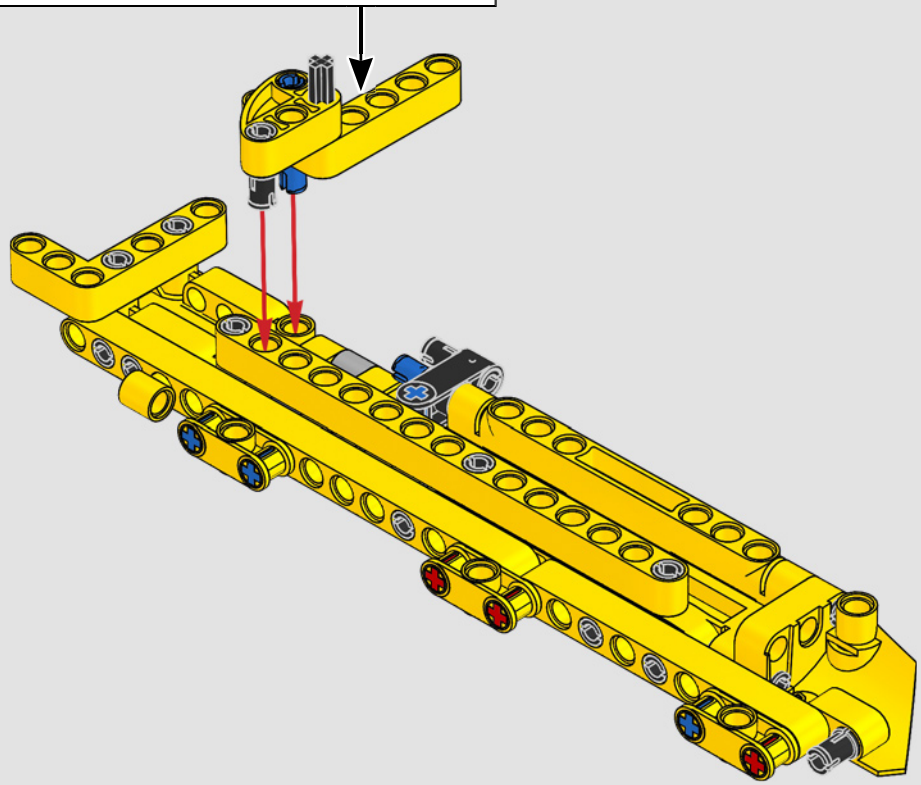

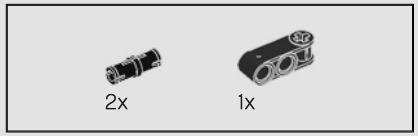

580

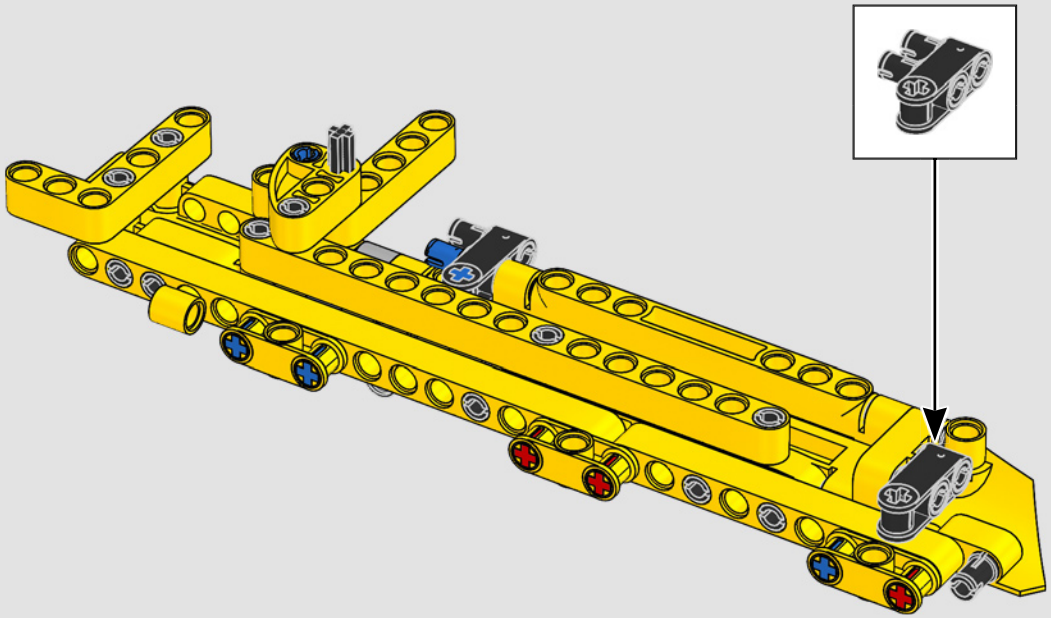

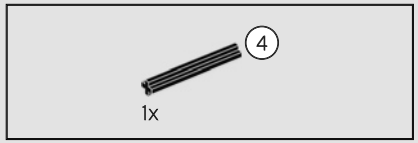

581

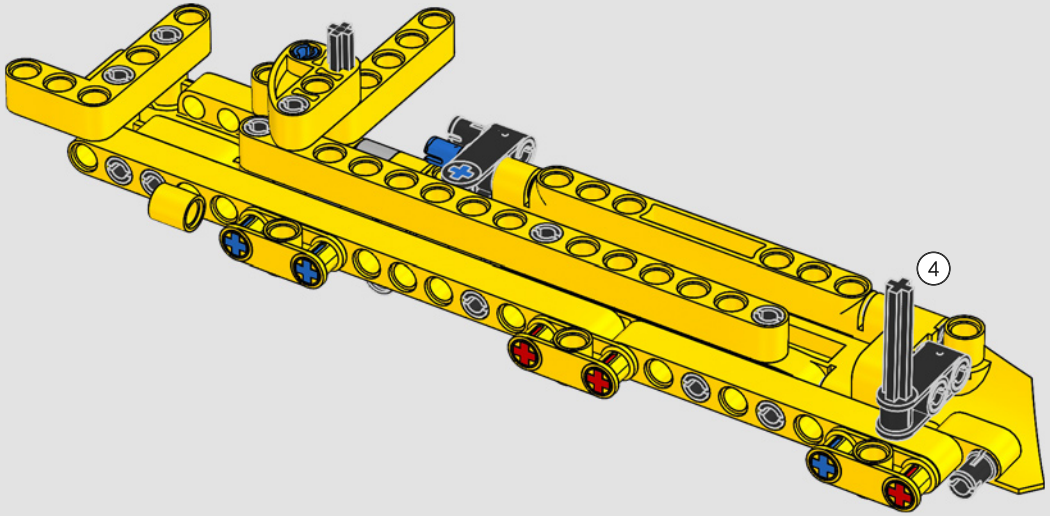

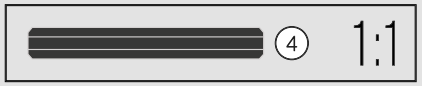

1x

582

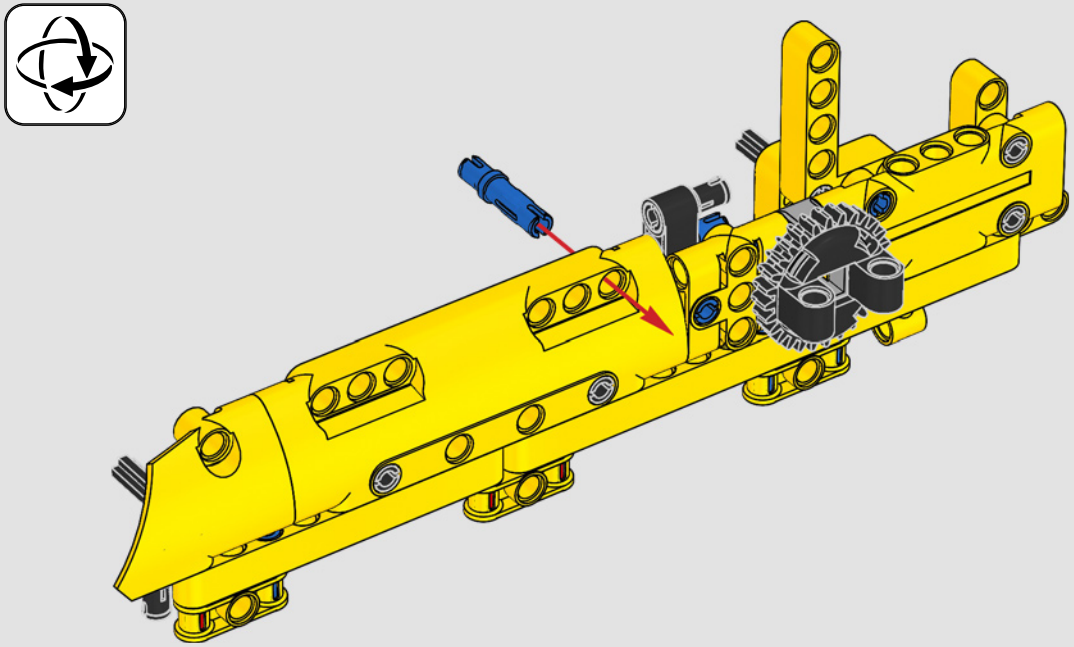

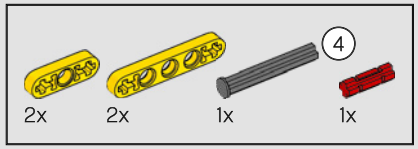

583

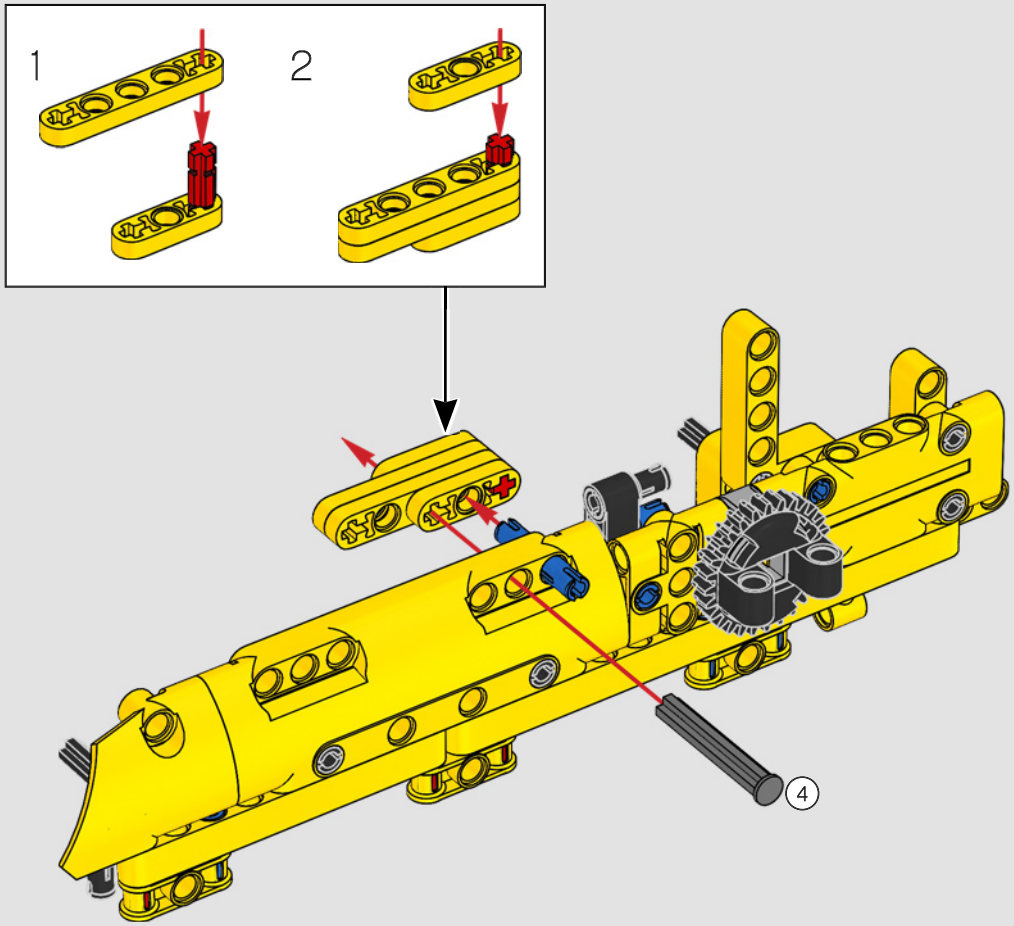

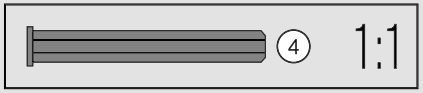

584

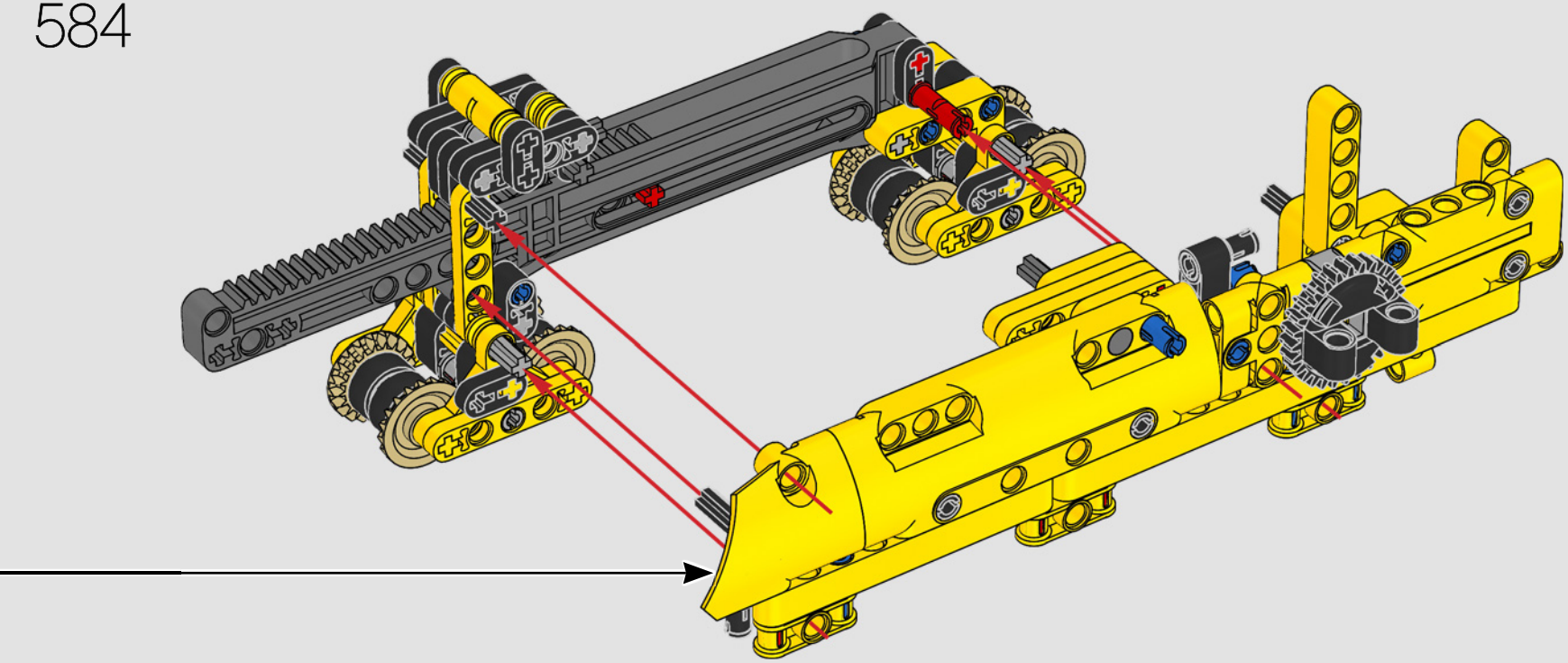

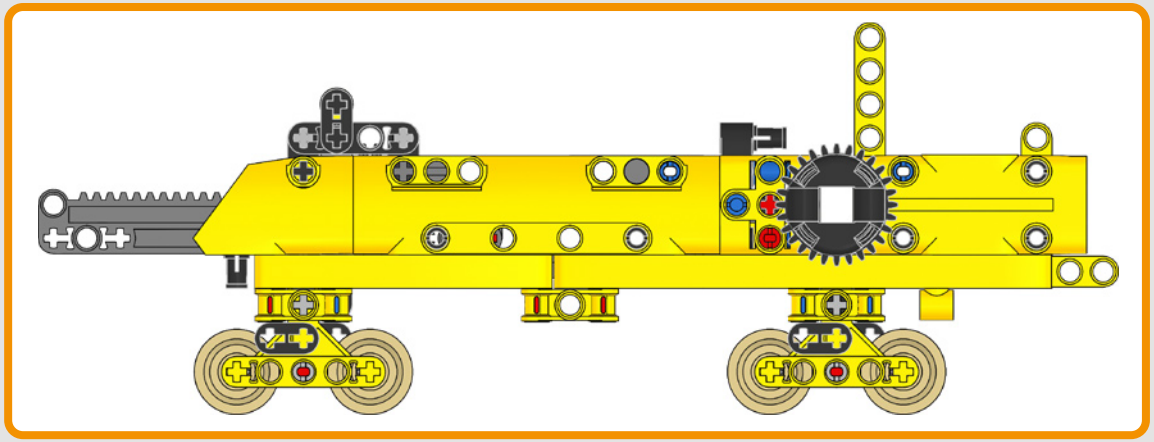

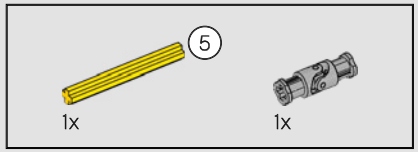

585

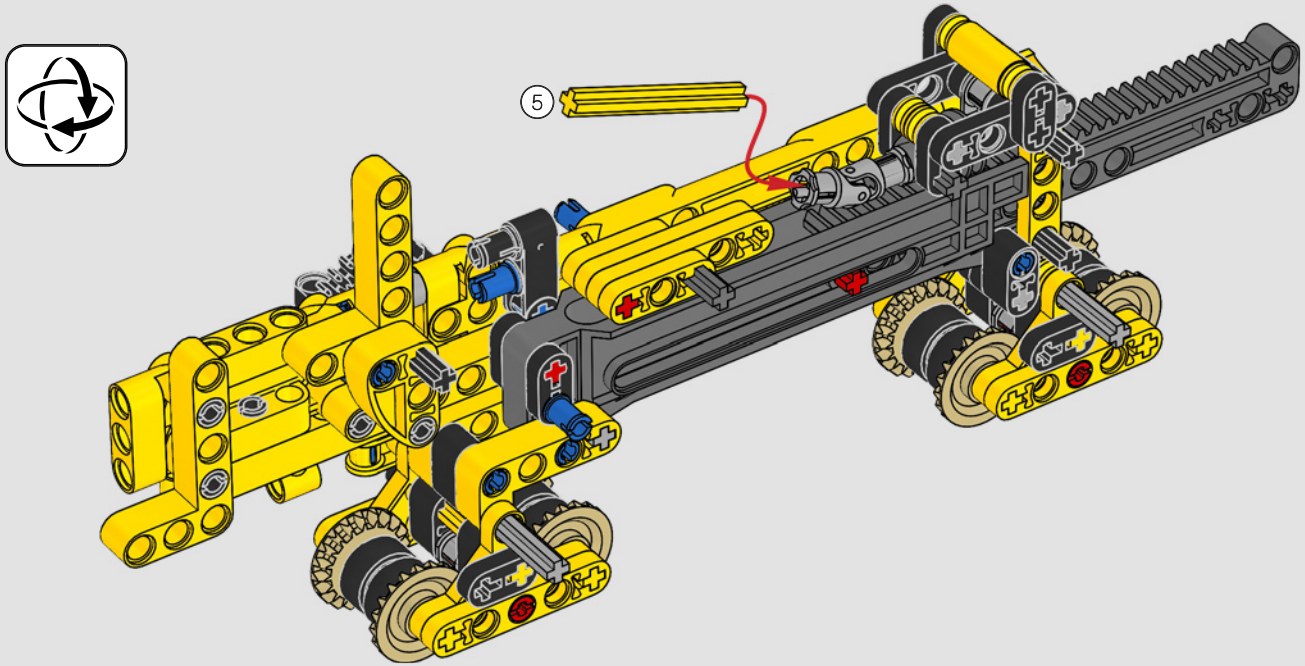

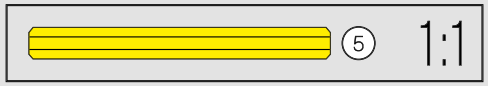

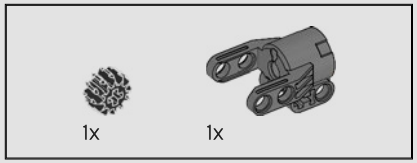

586

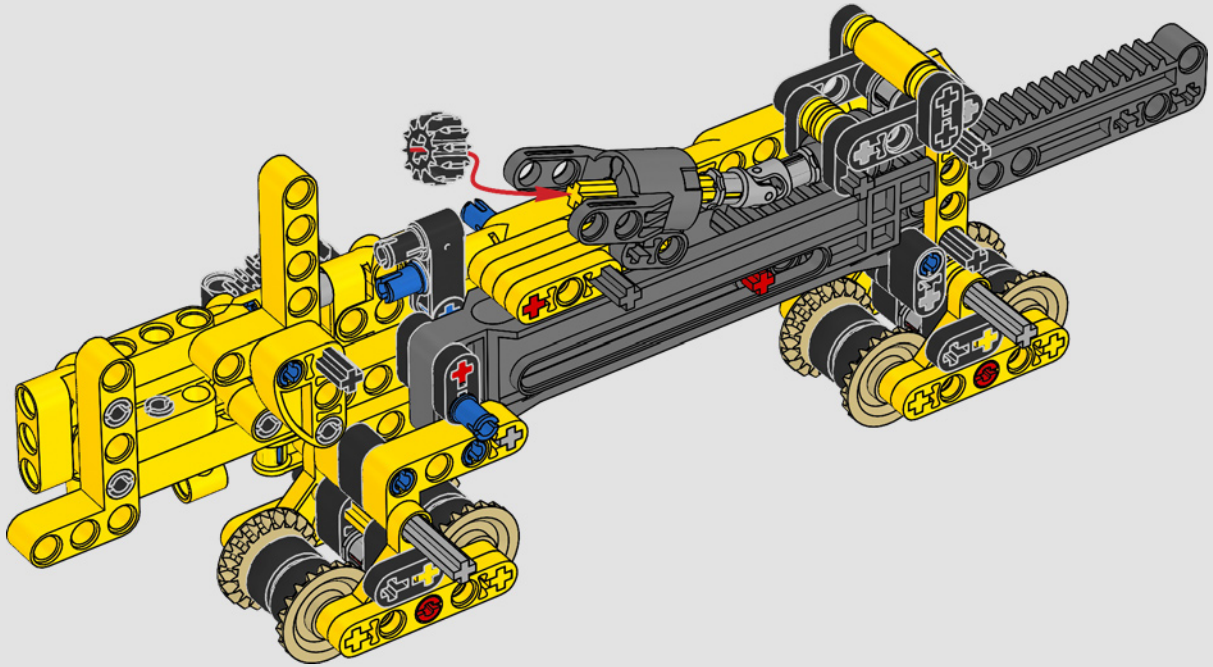

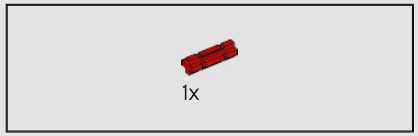

587

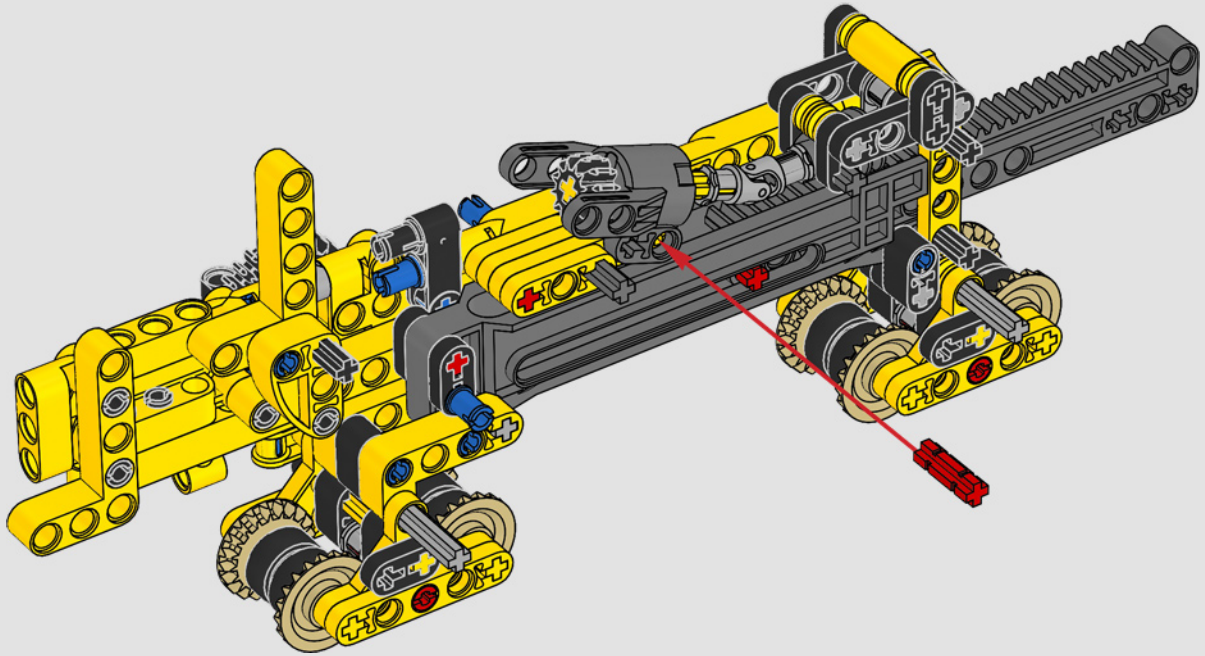

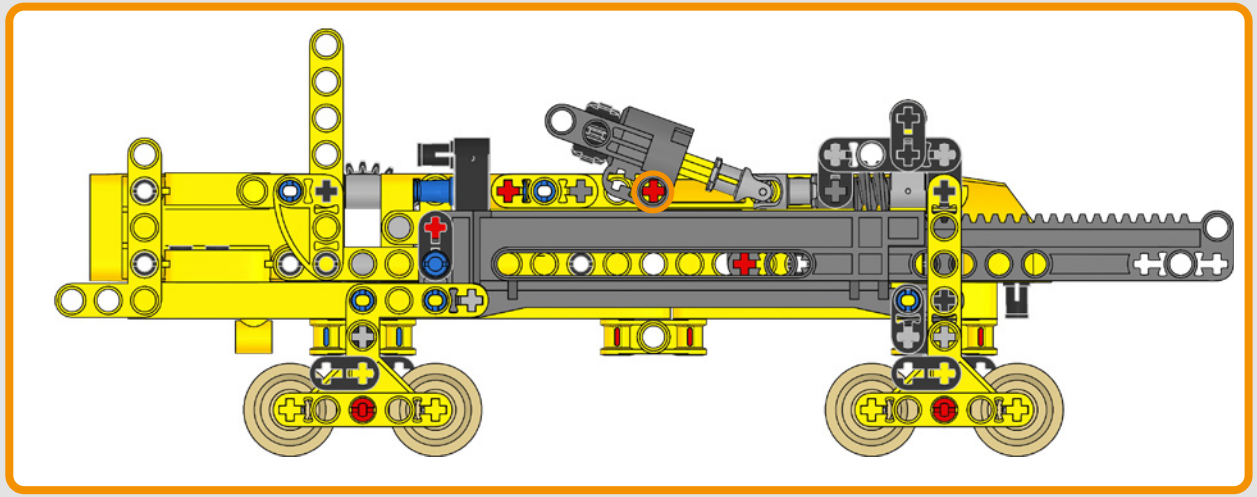

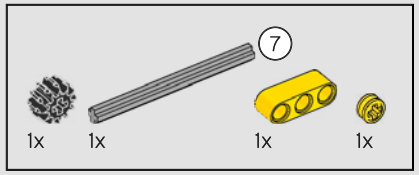

588

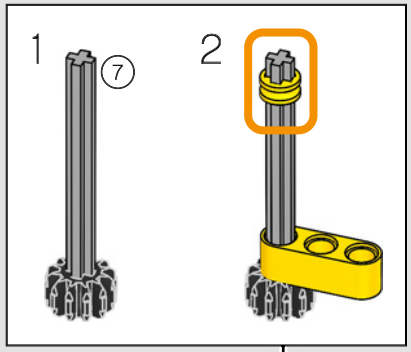

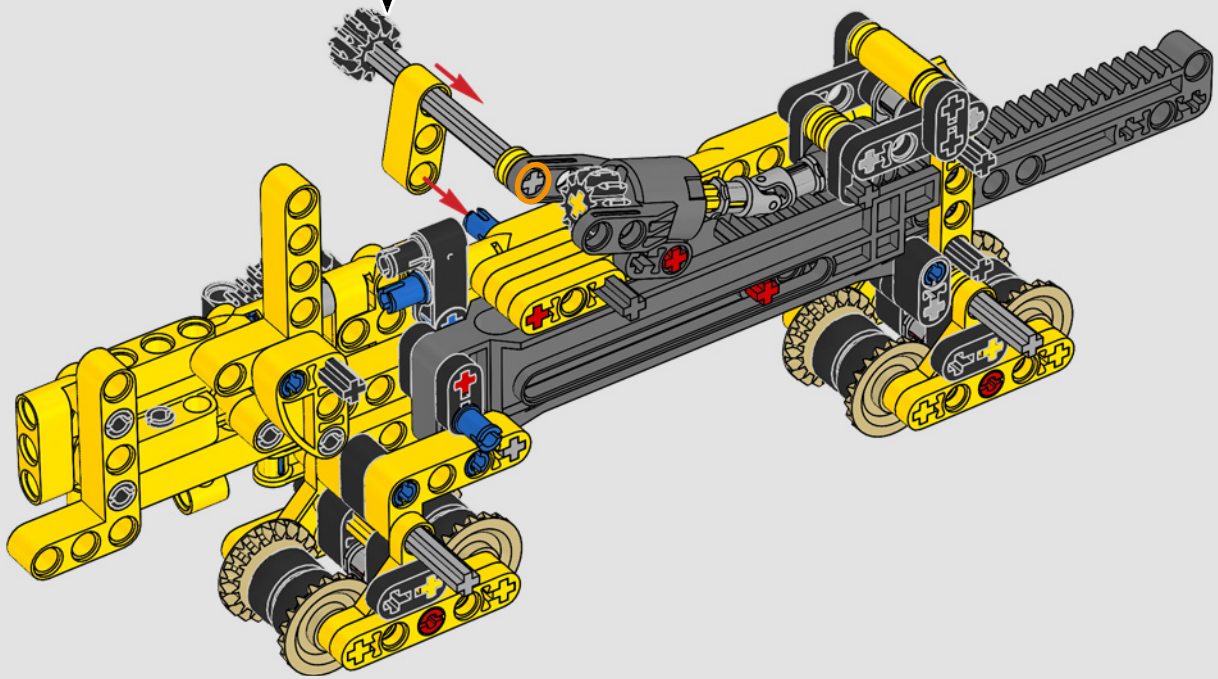

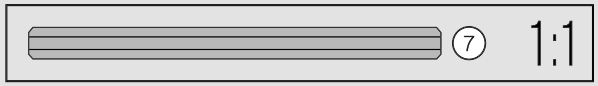

589

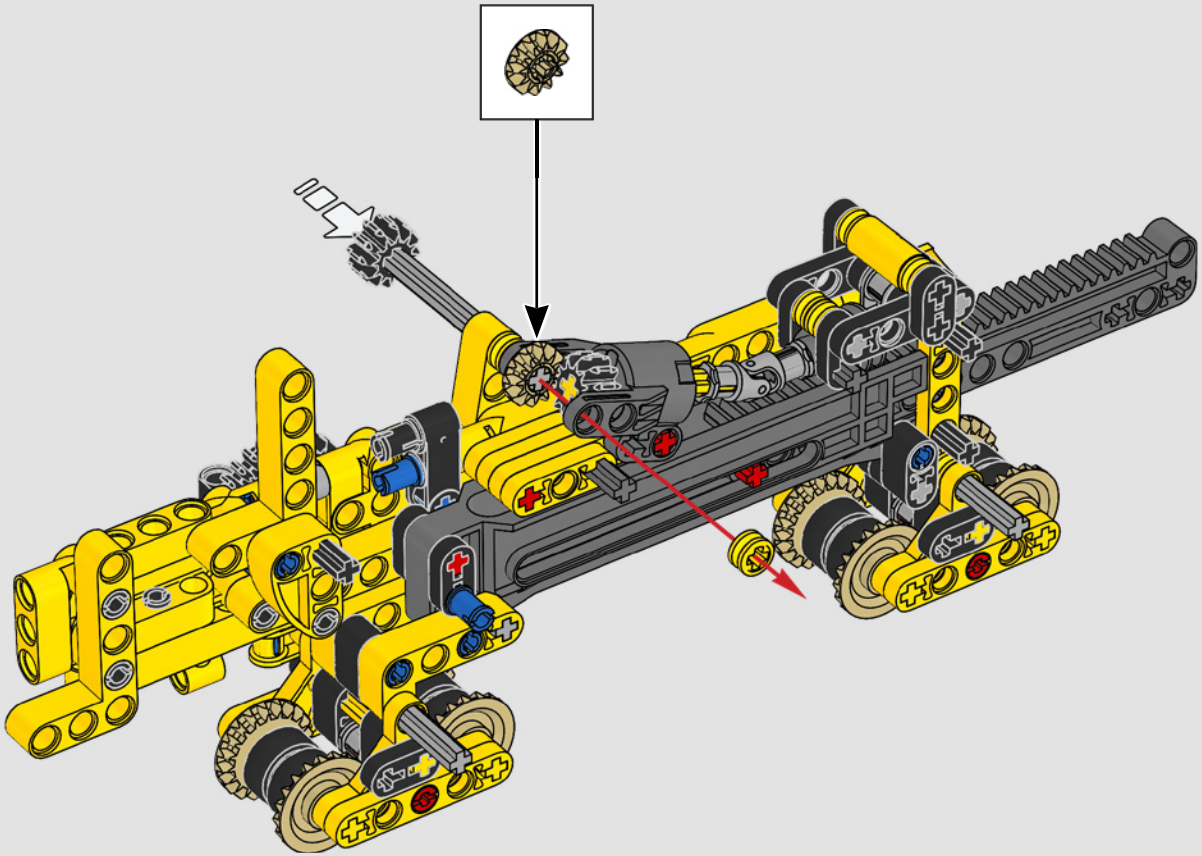

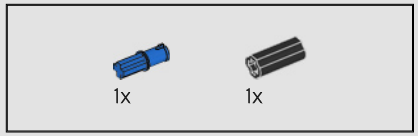

590

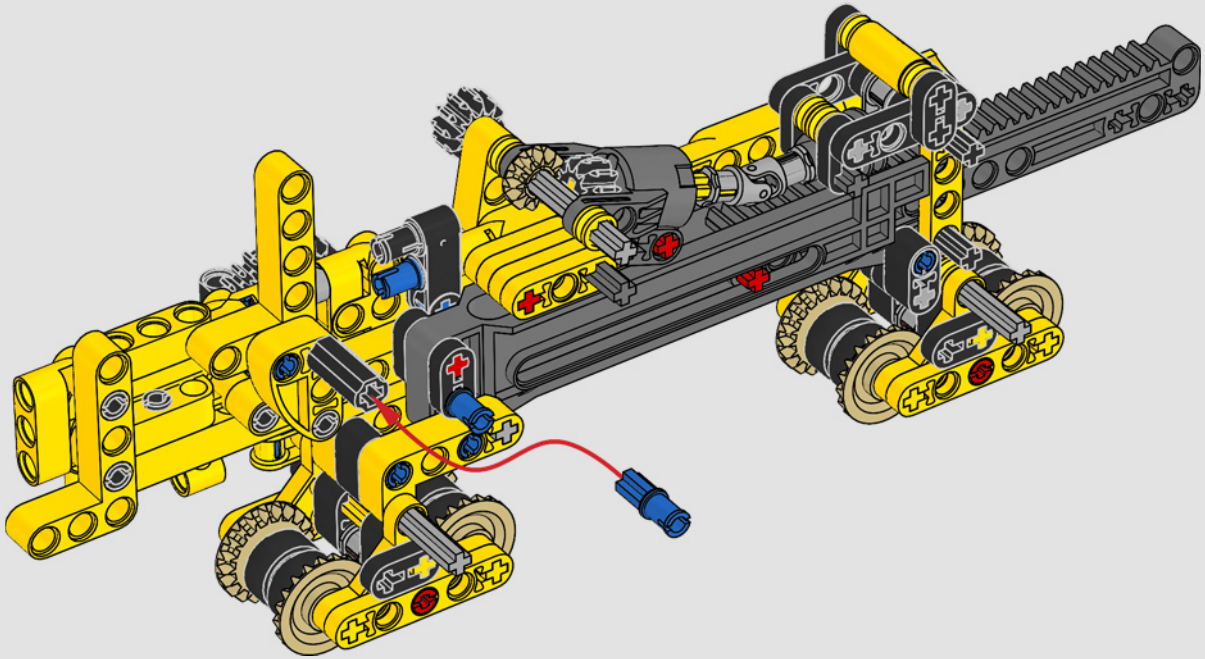

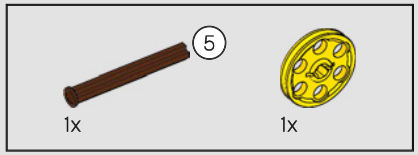

591

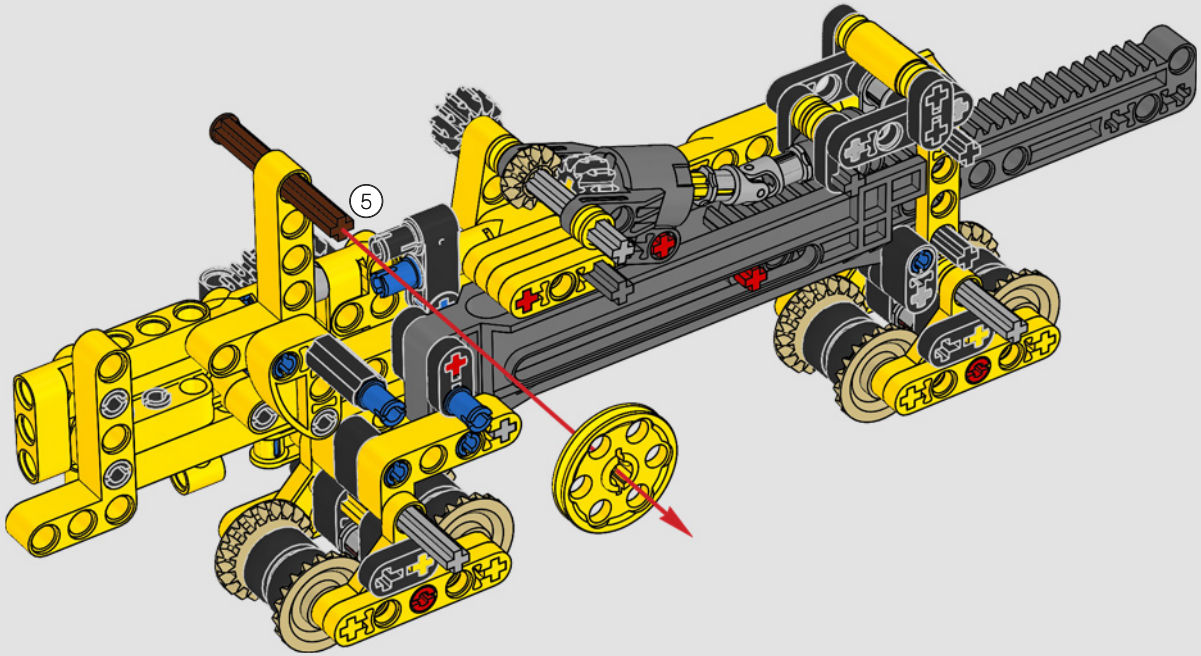

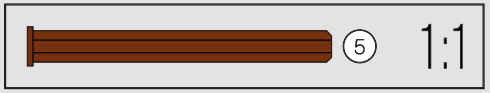

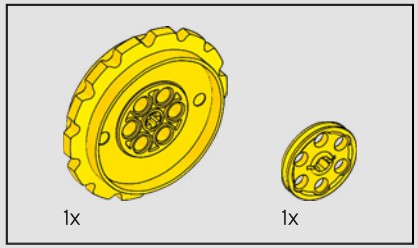

592

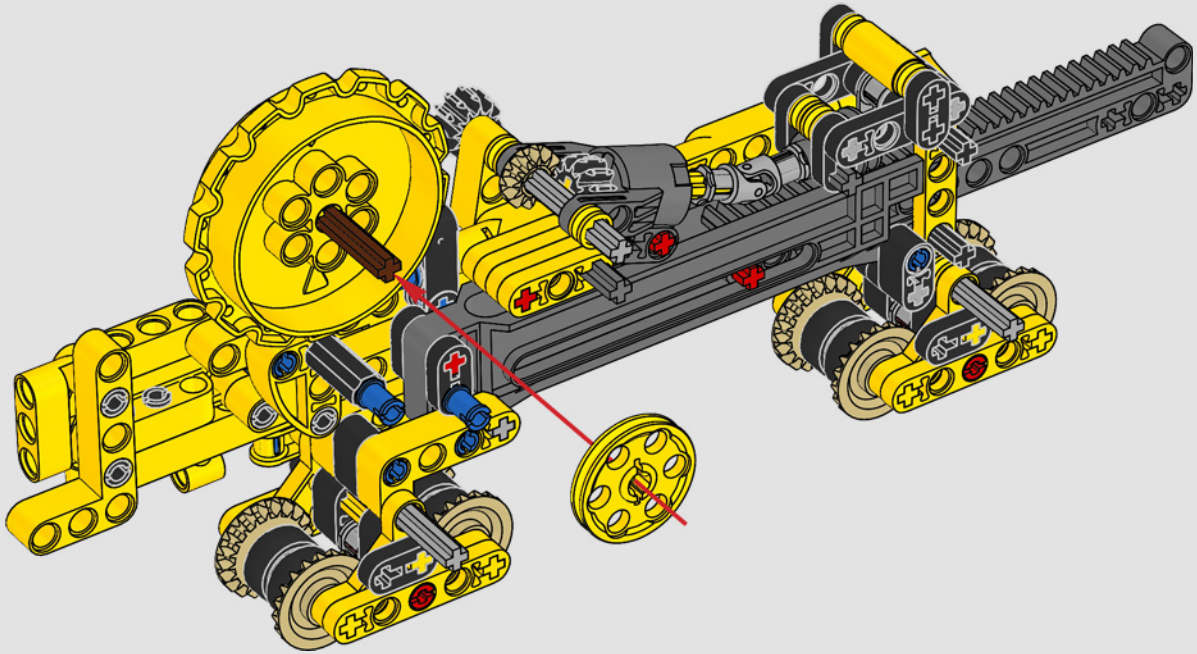

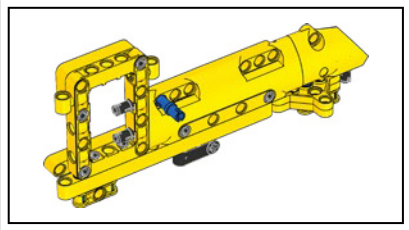

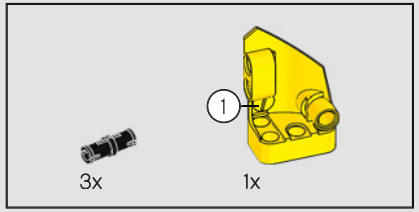

593

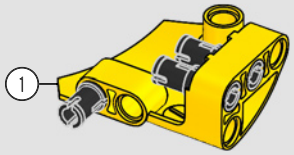

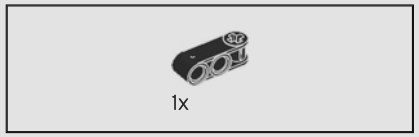

594

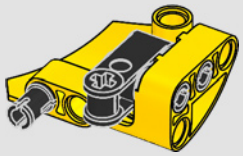

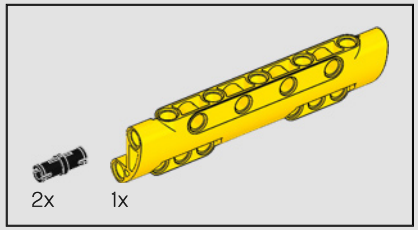

595

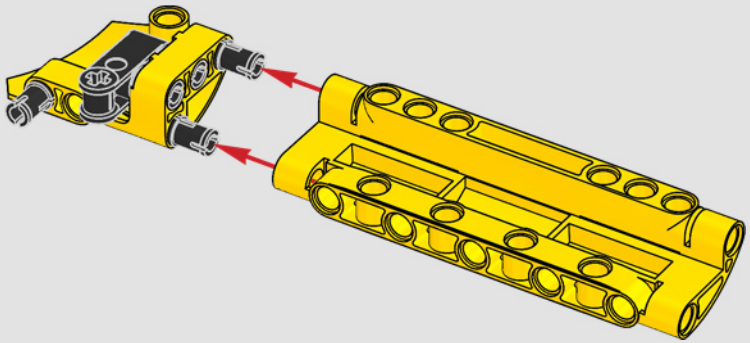

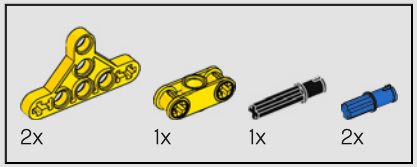

596

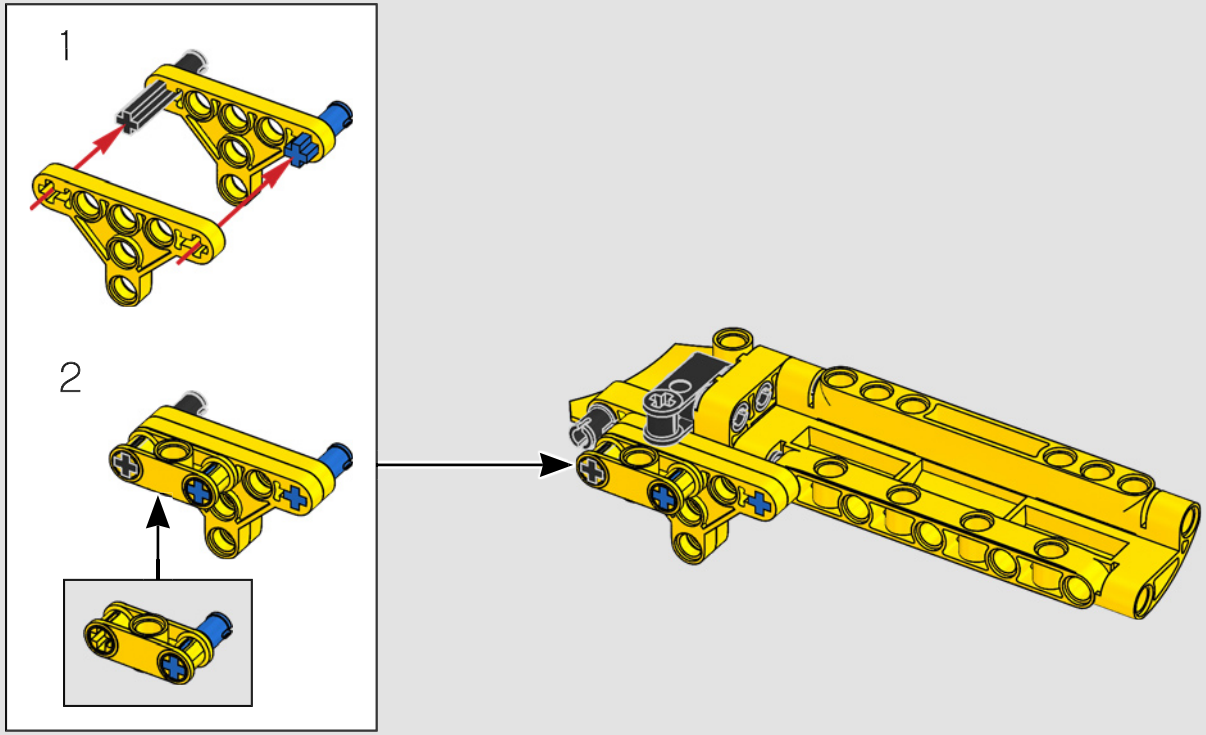

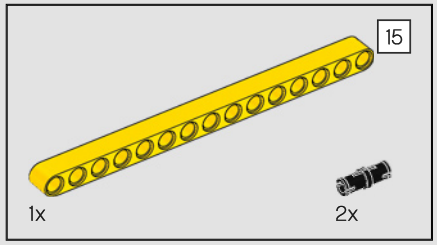

597

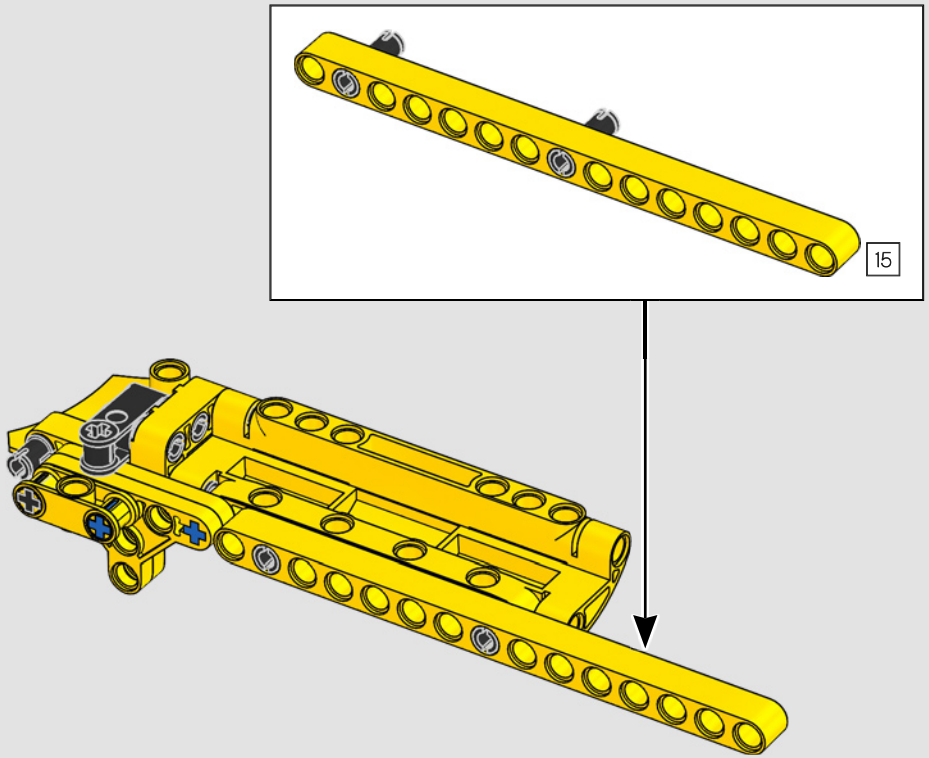

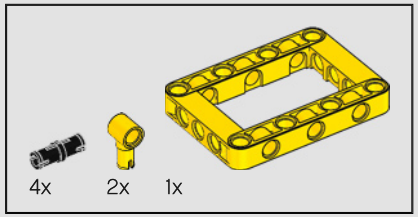

598

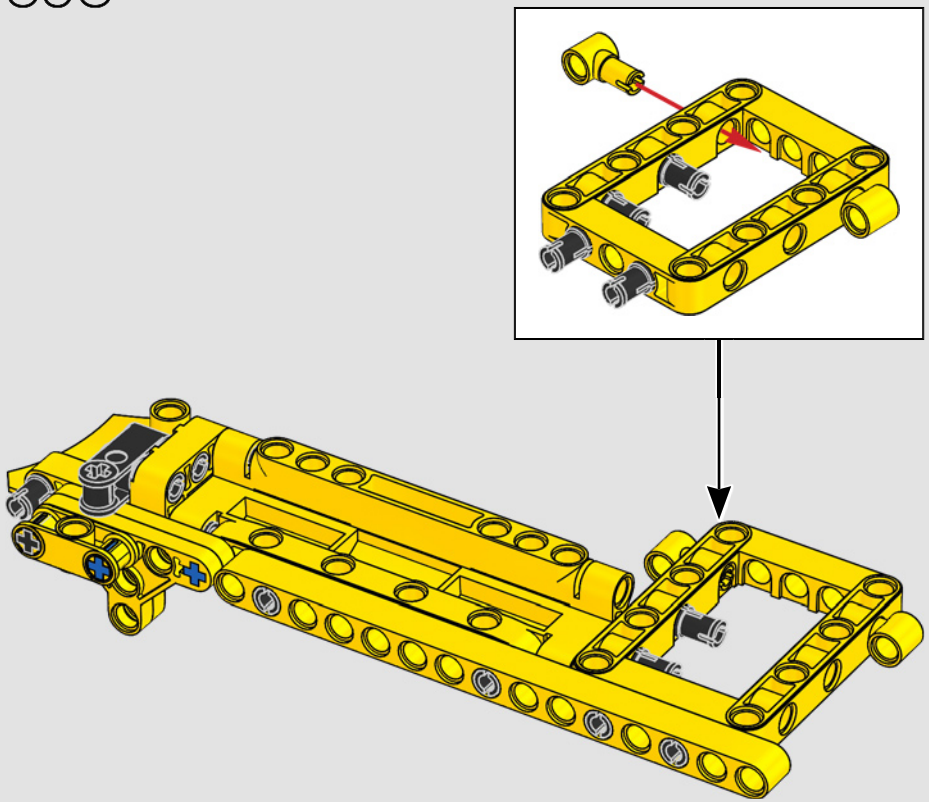

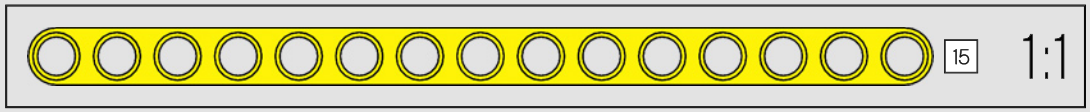

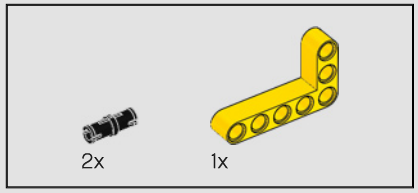

599

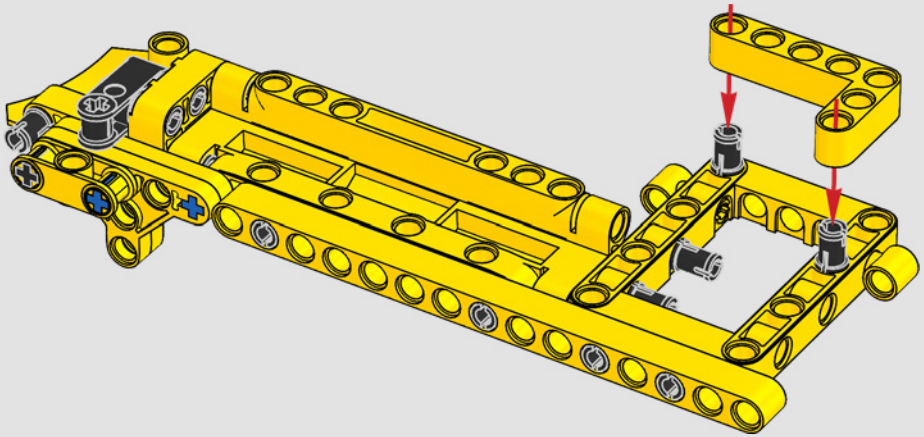

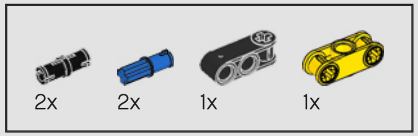

600

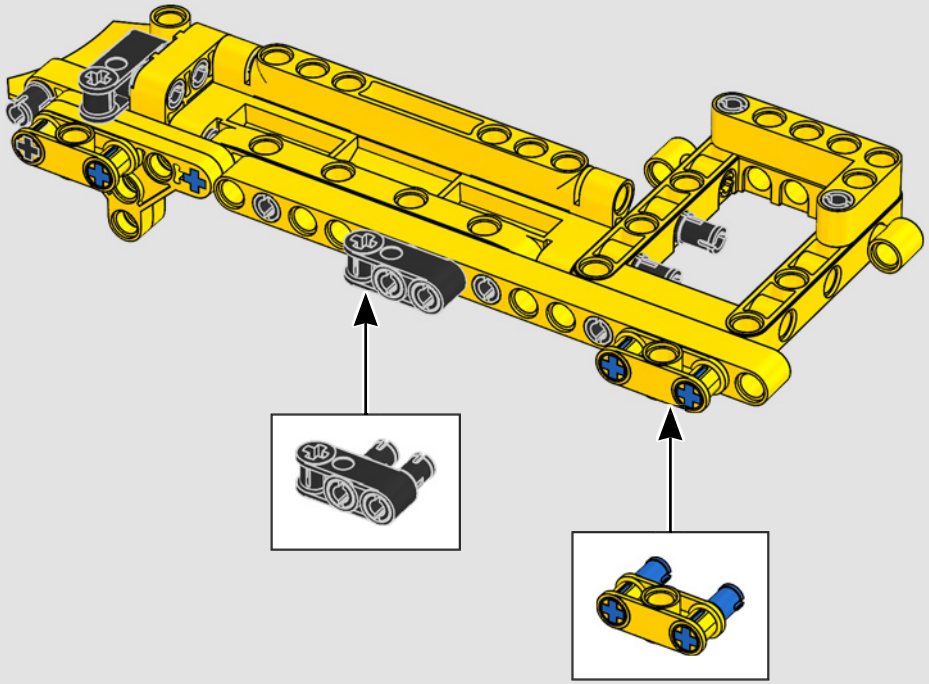

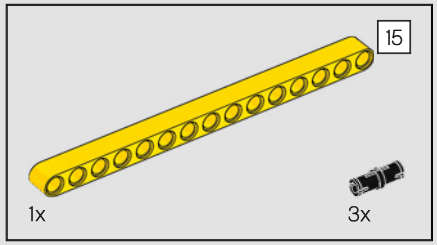

601

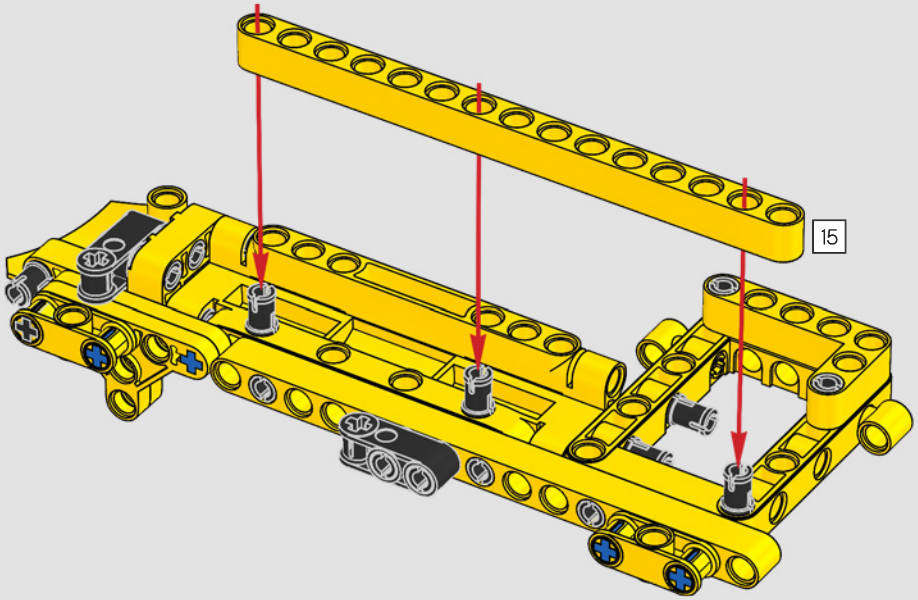

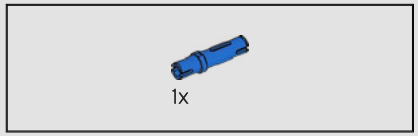

602

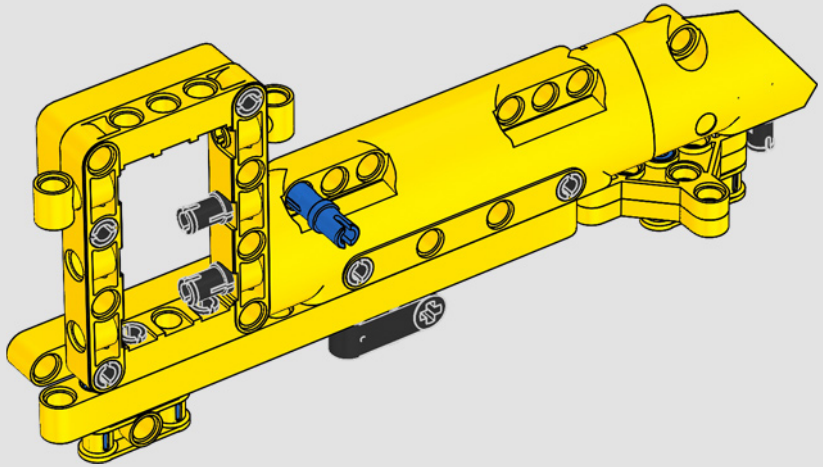

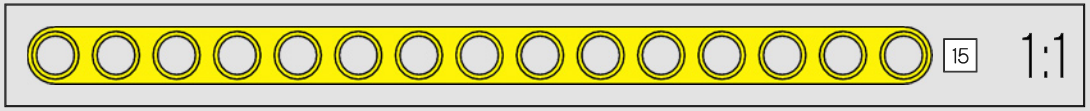

603

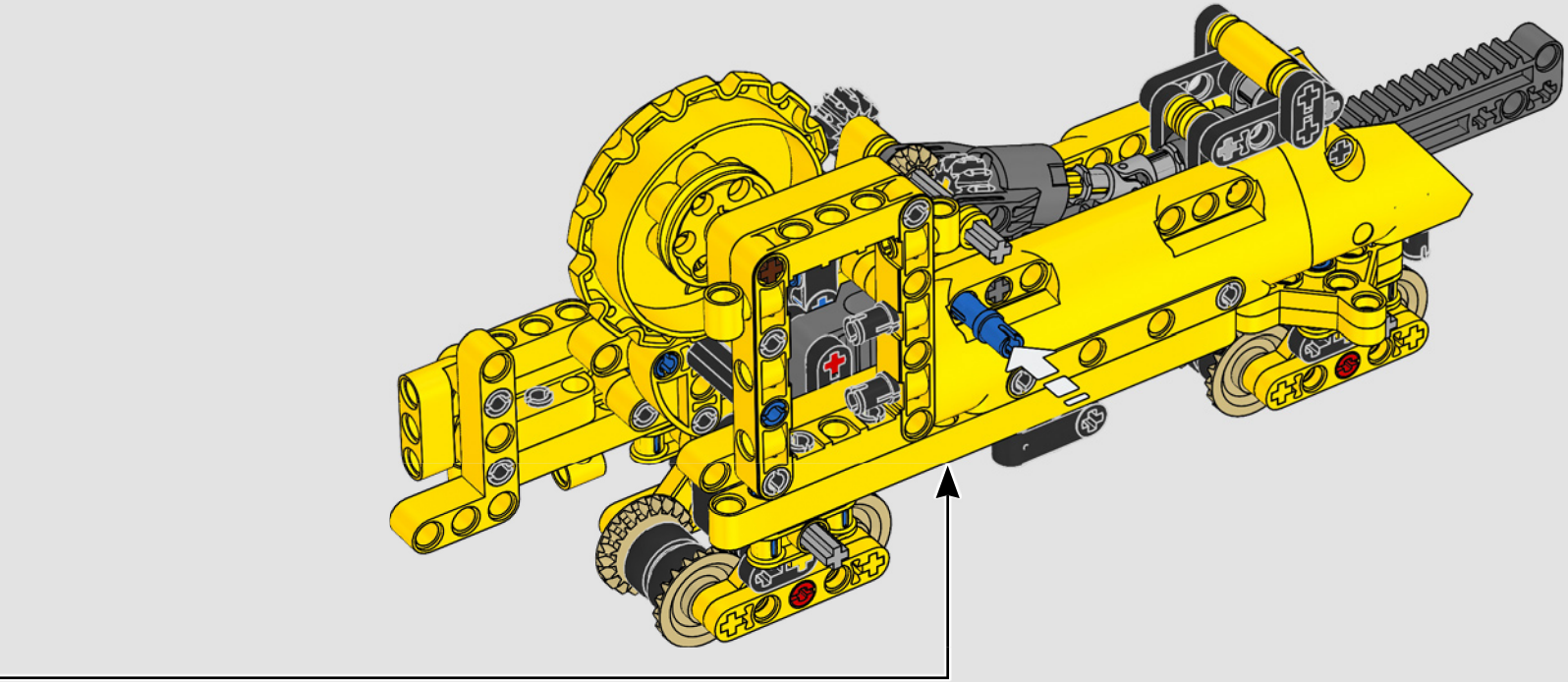

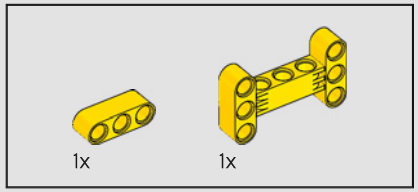

604

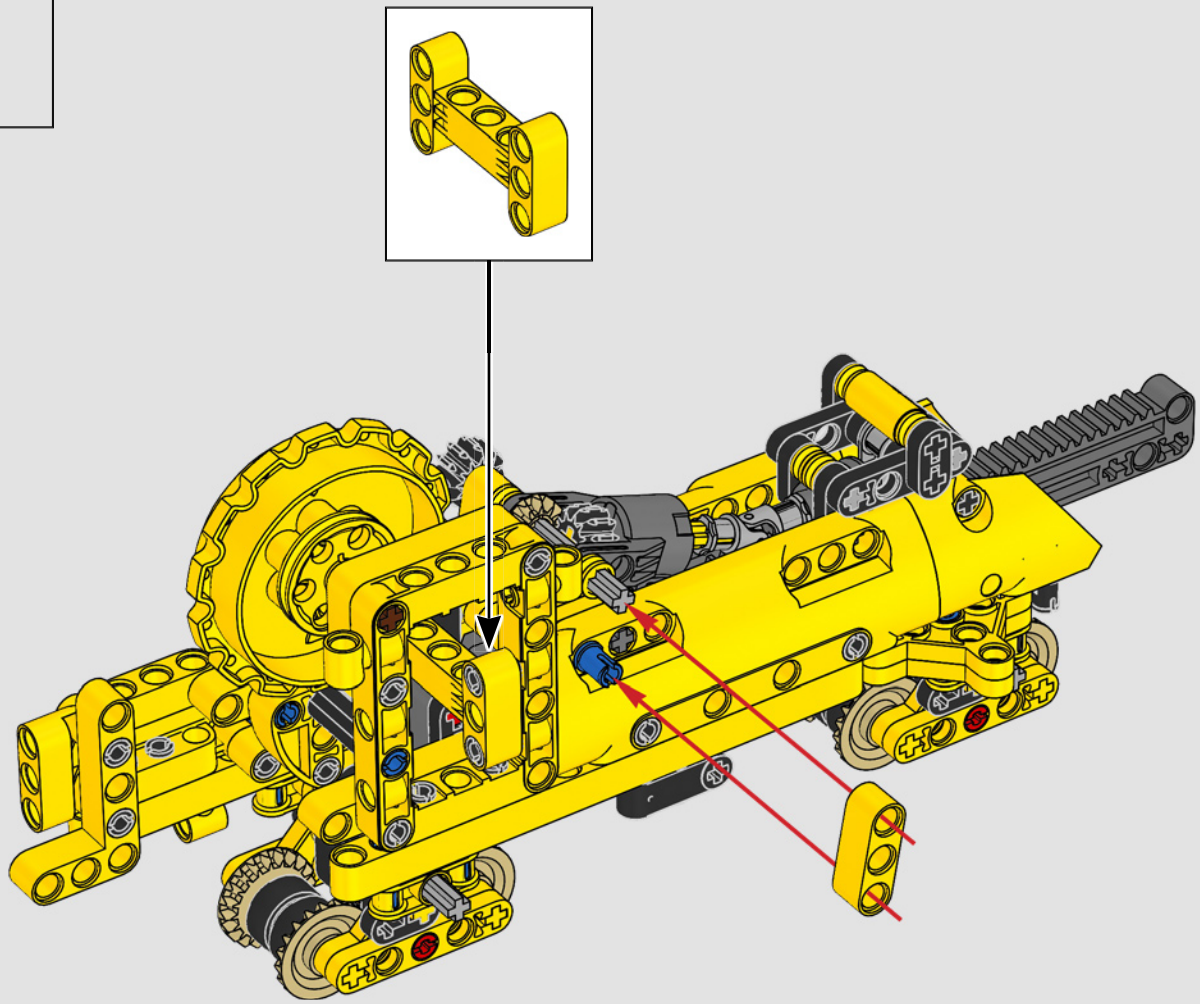

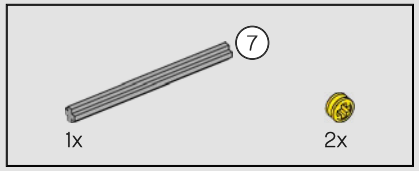

605

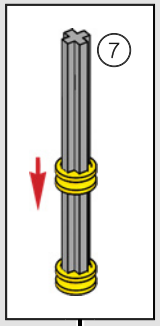

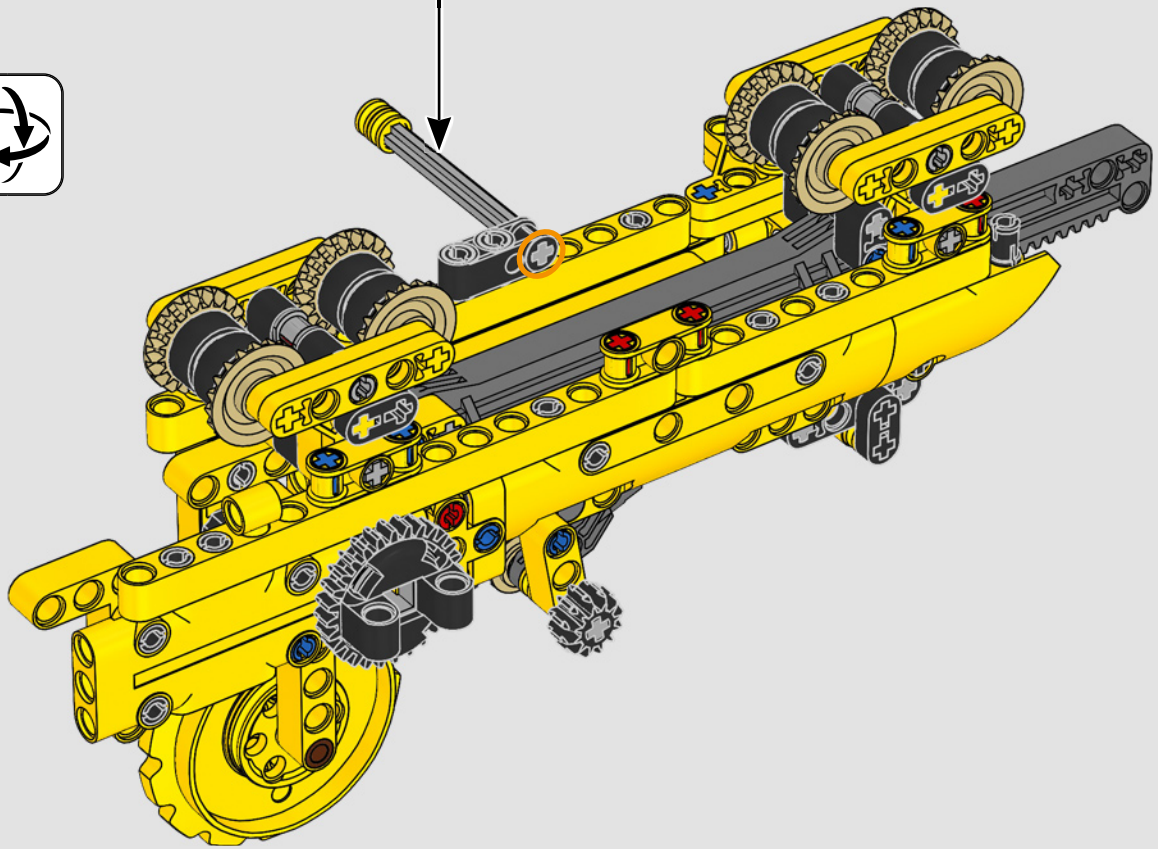

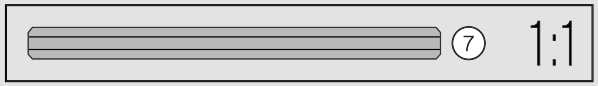

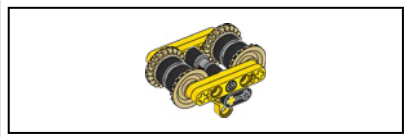

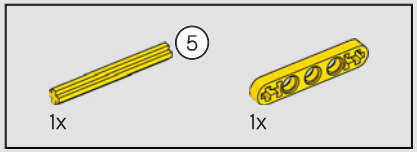

606

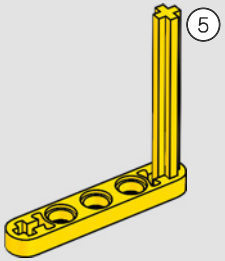

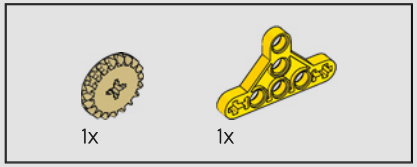

607

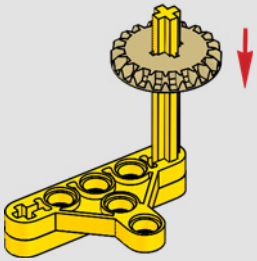

608

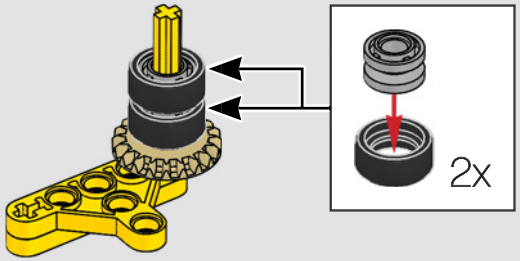

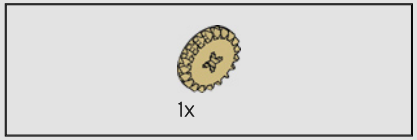

609

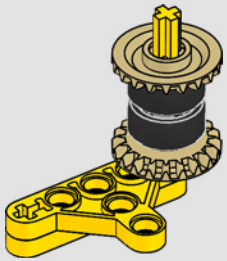

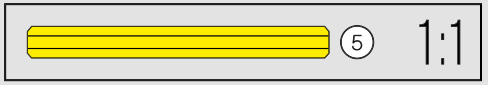

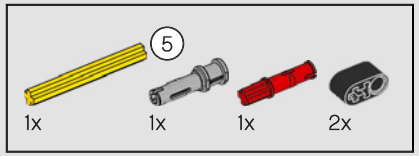

610

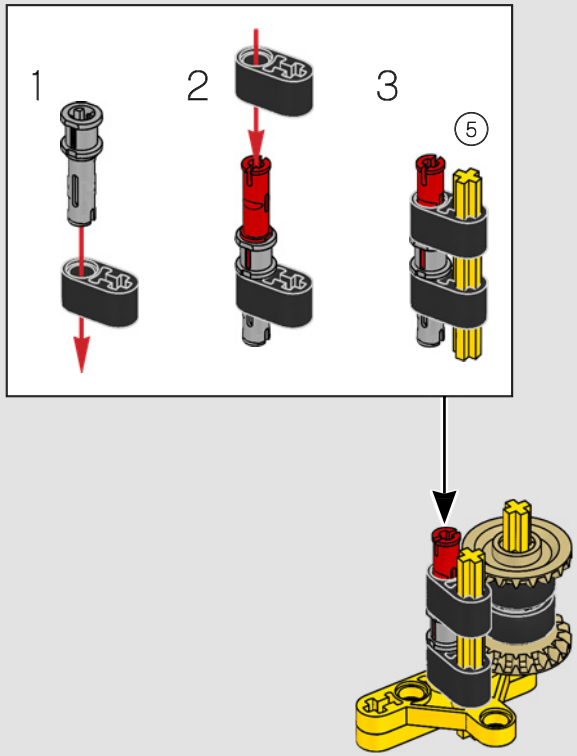

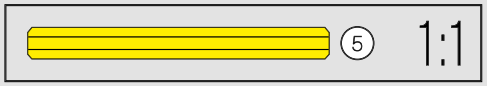

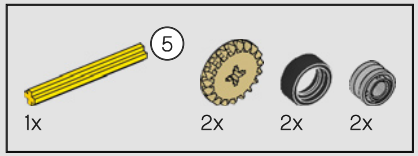

611

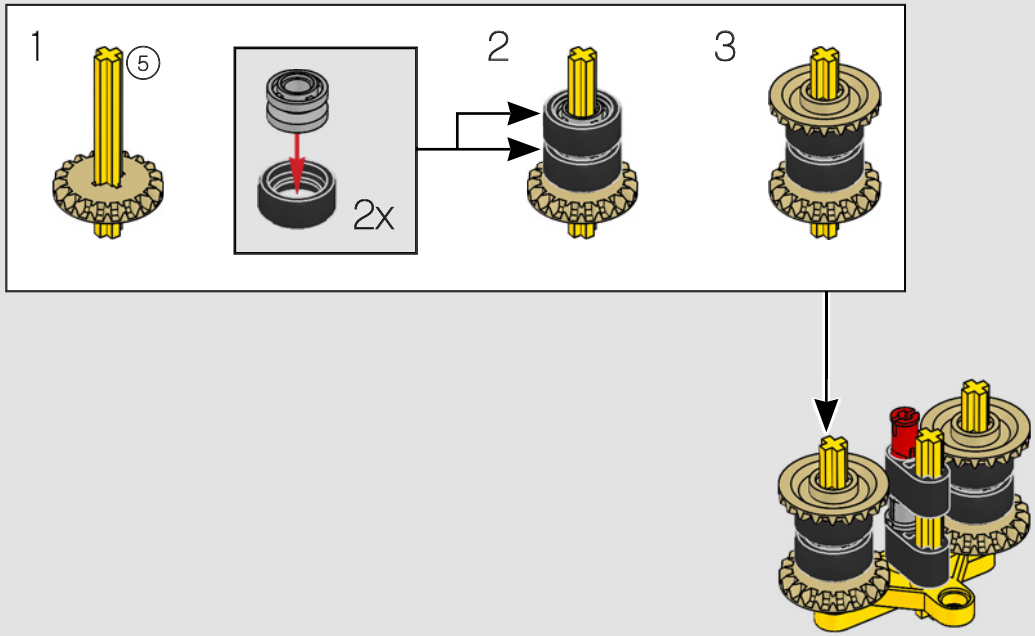

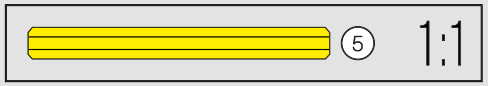

612

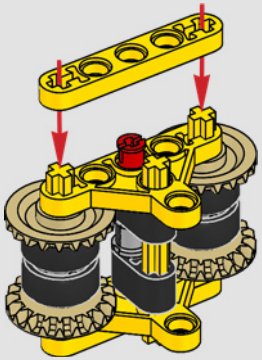

613

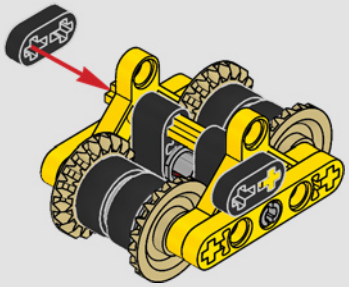

614

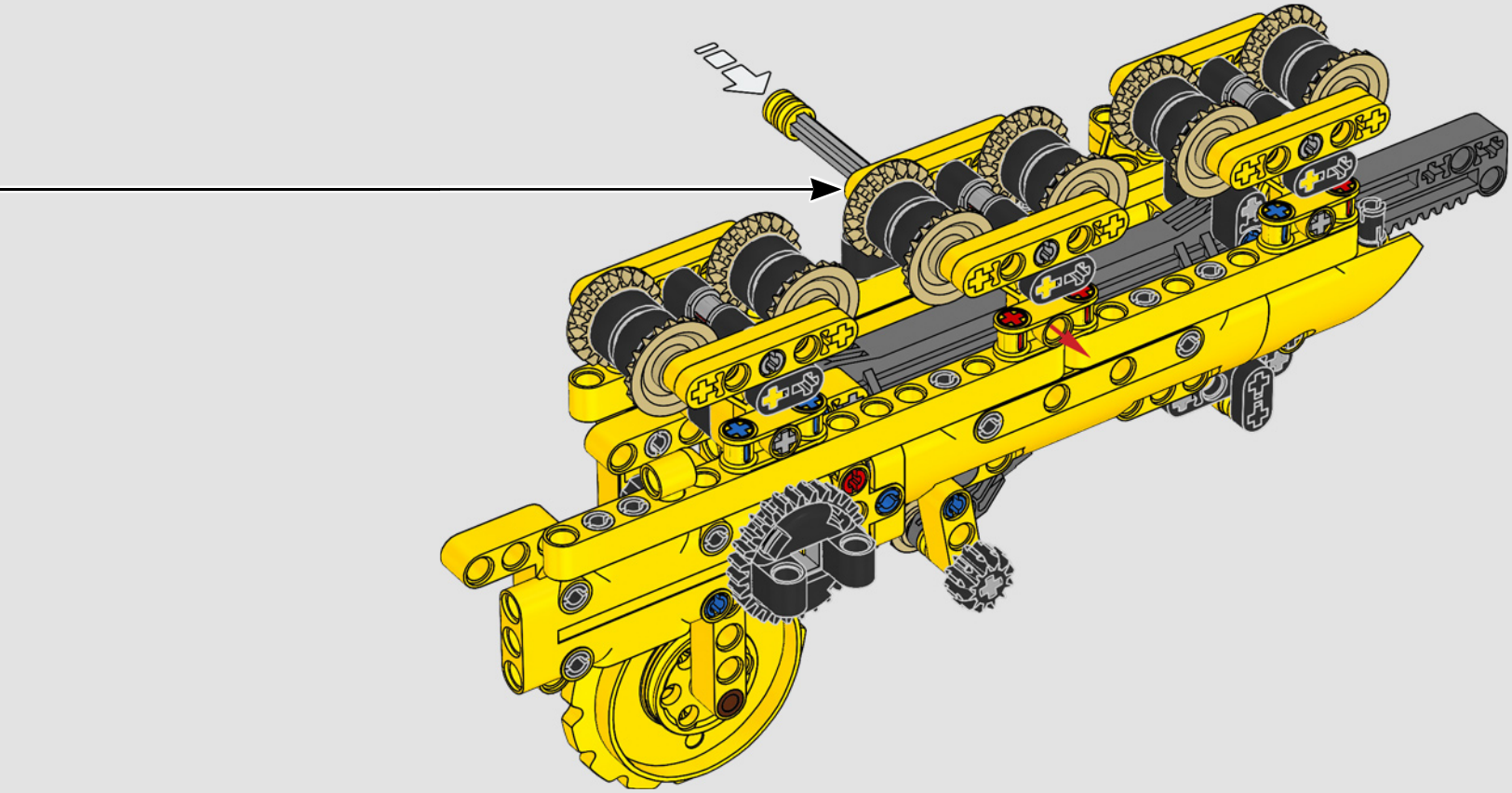

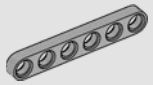

615

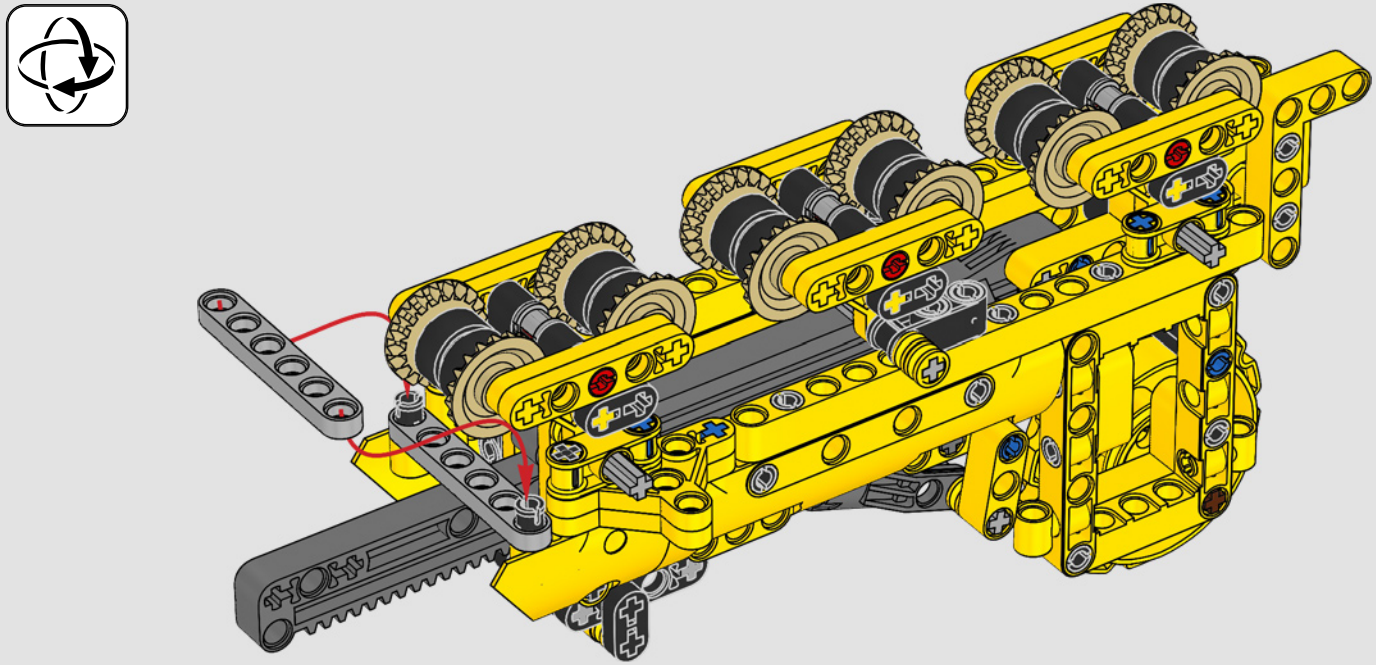

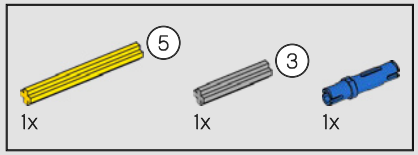

616

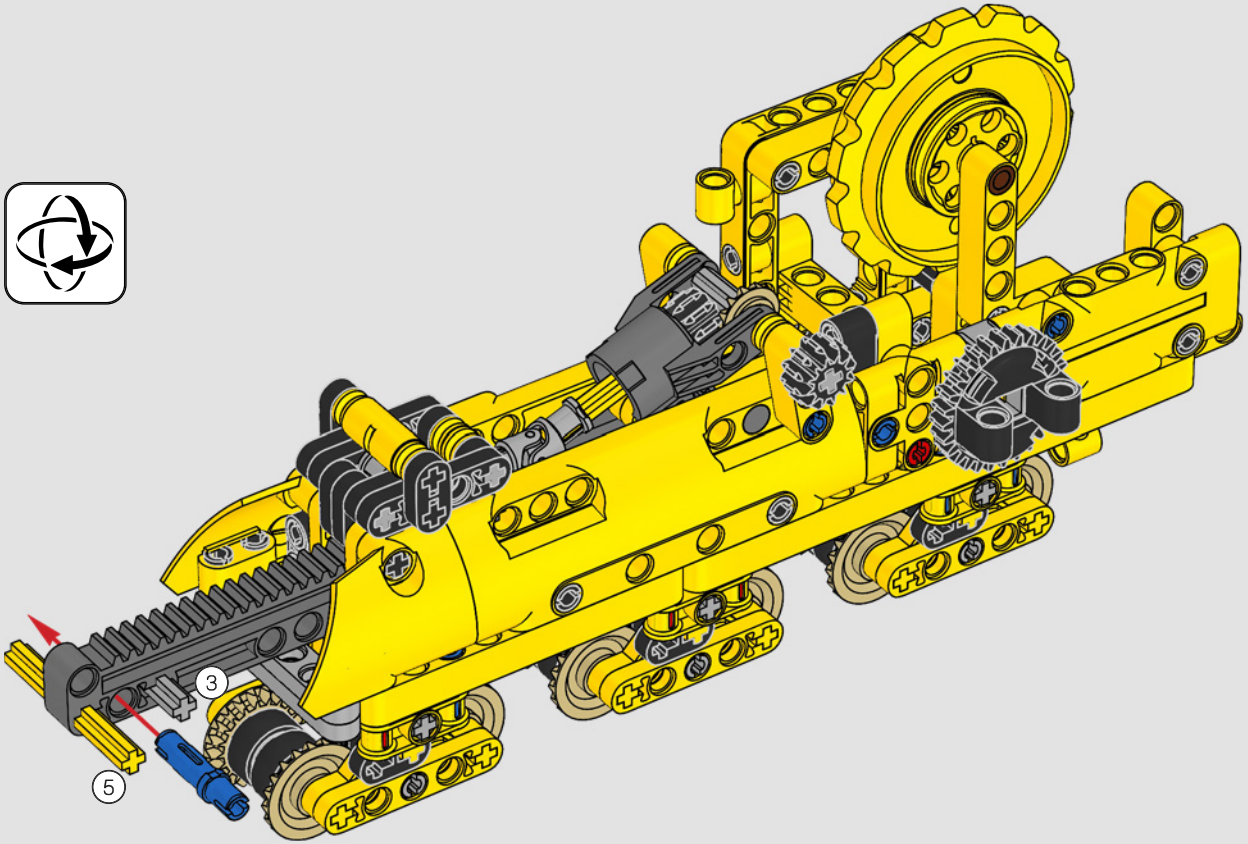

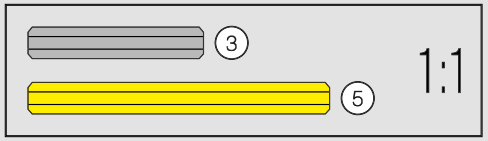

2x

617

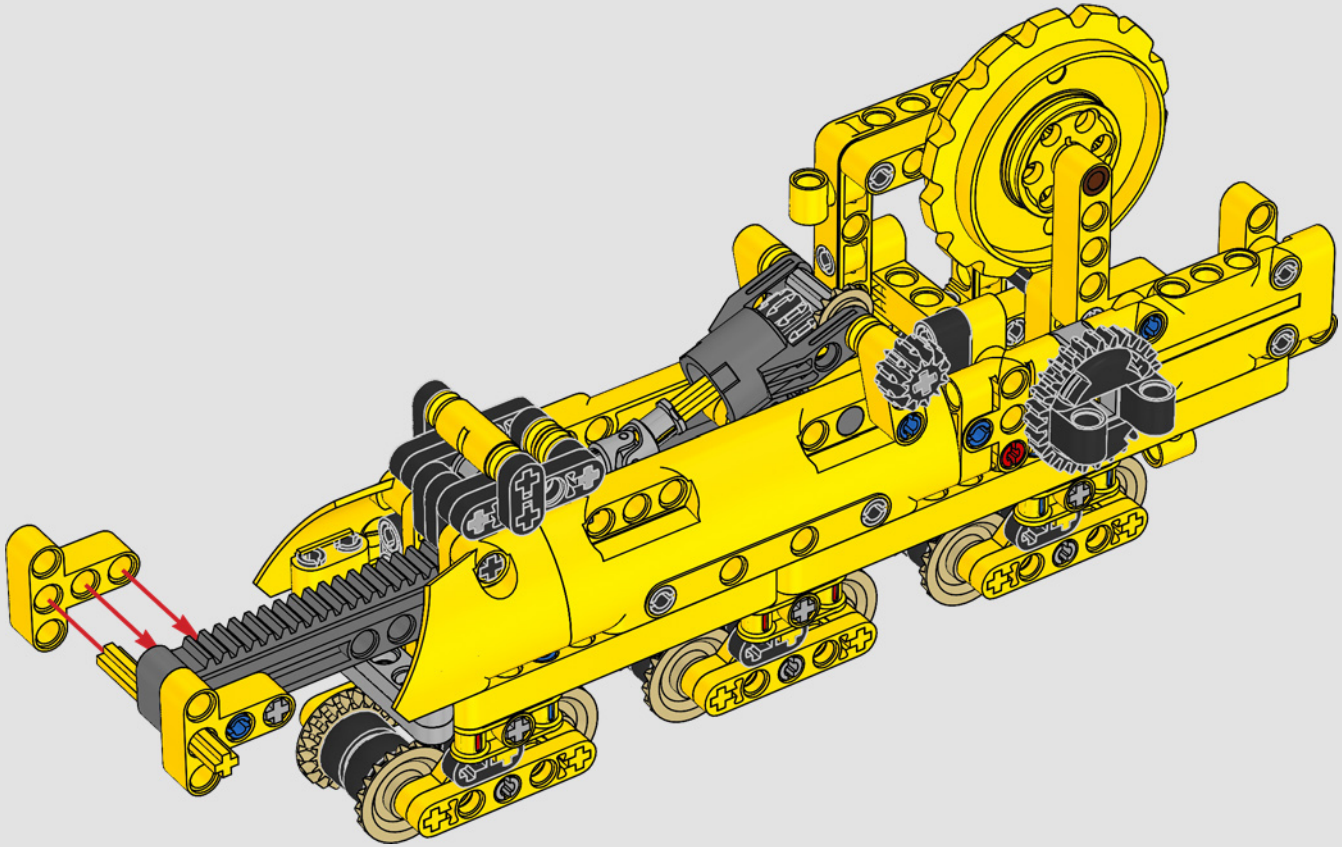

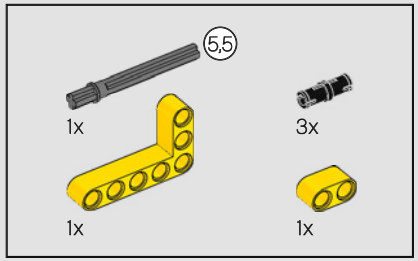

618

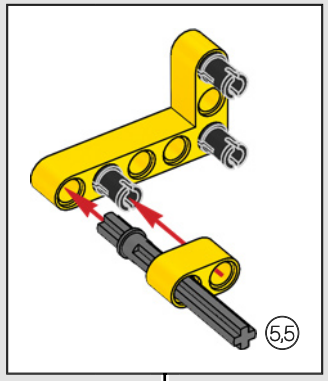

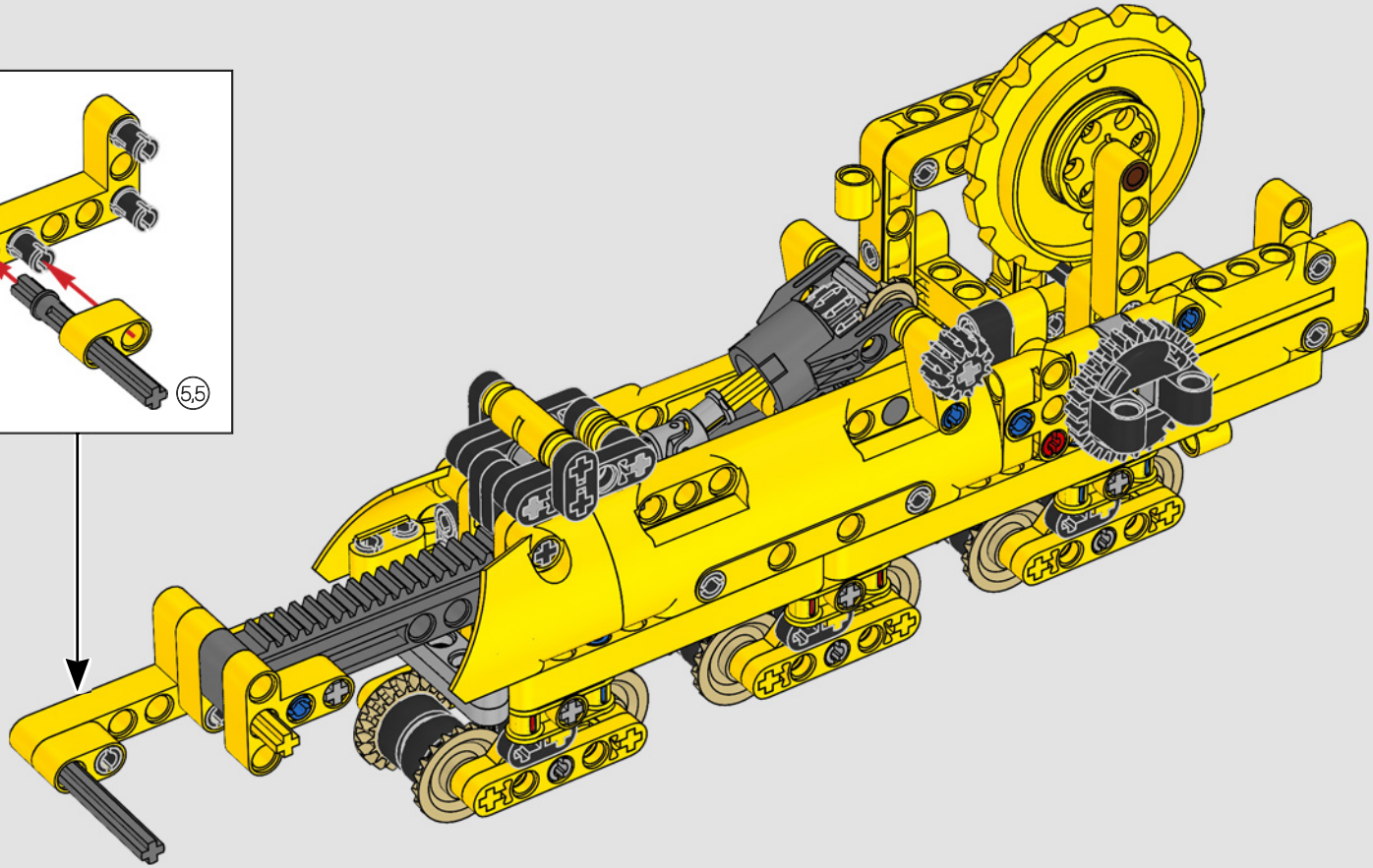

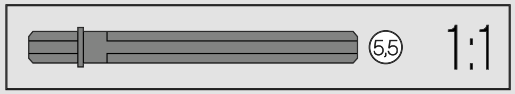

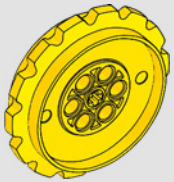

1x

619

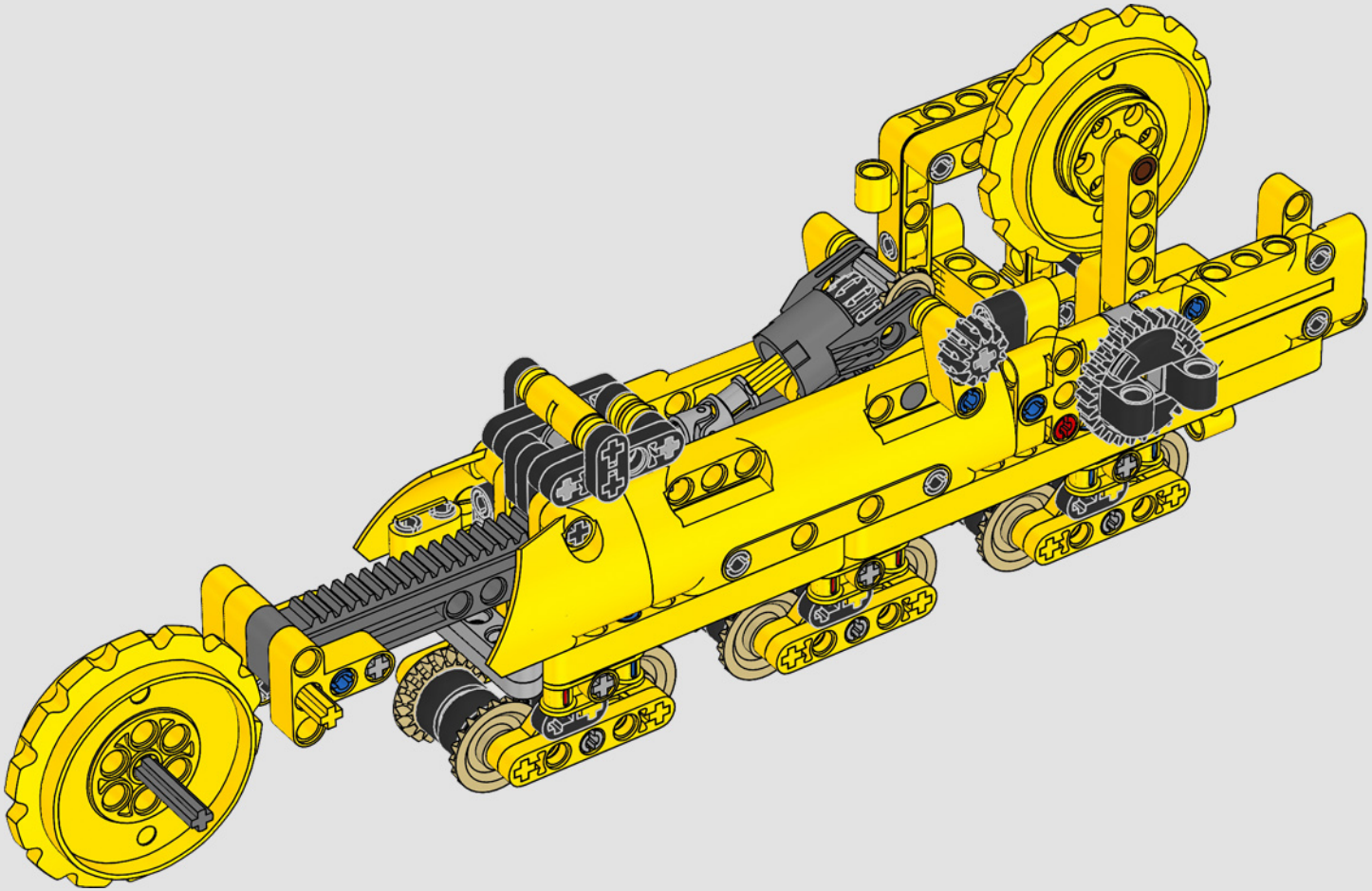

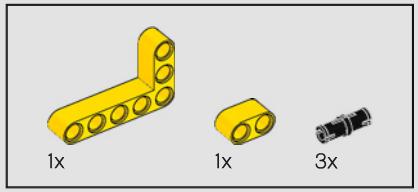

620

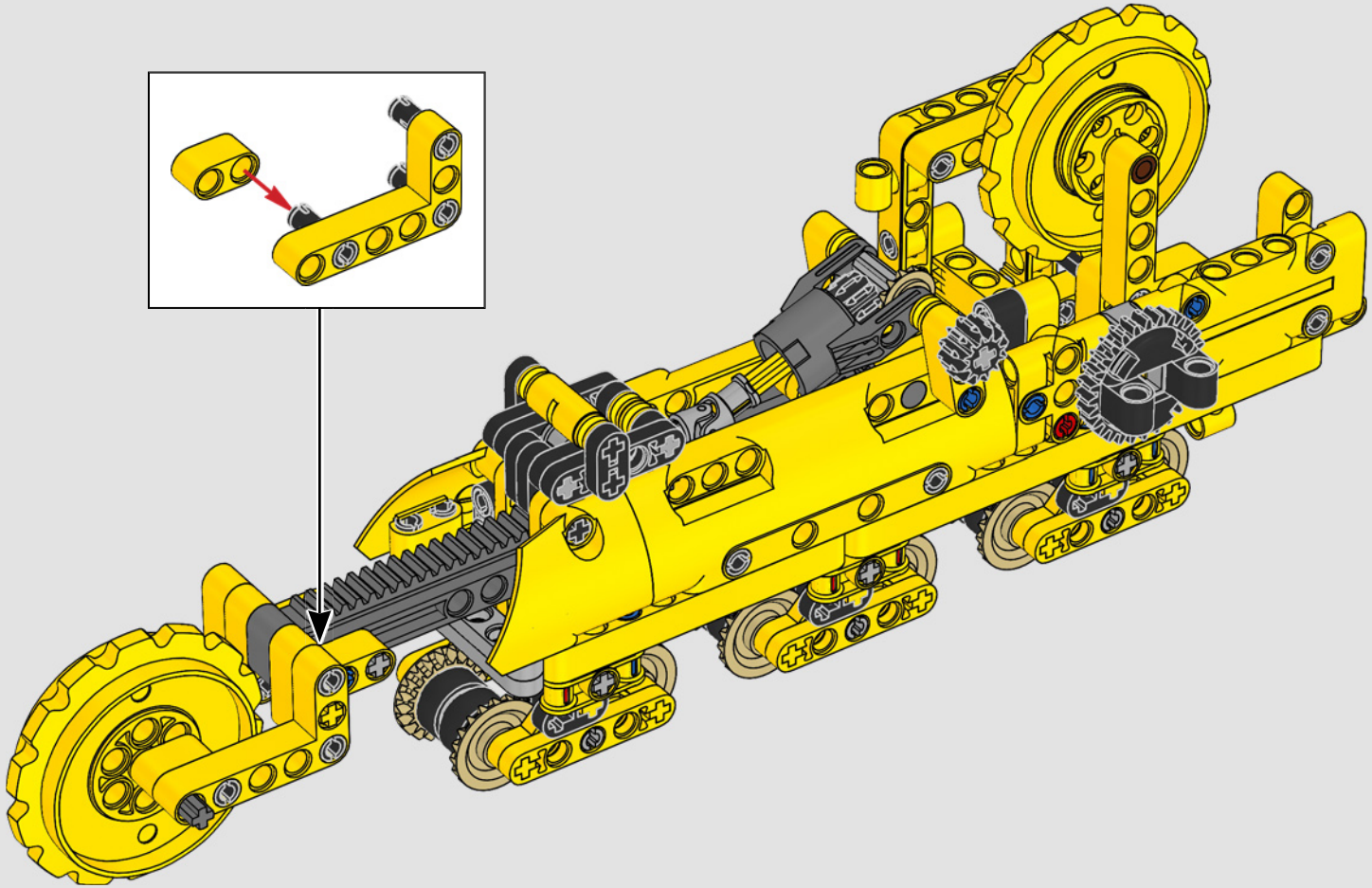

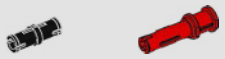

621

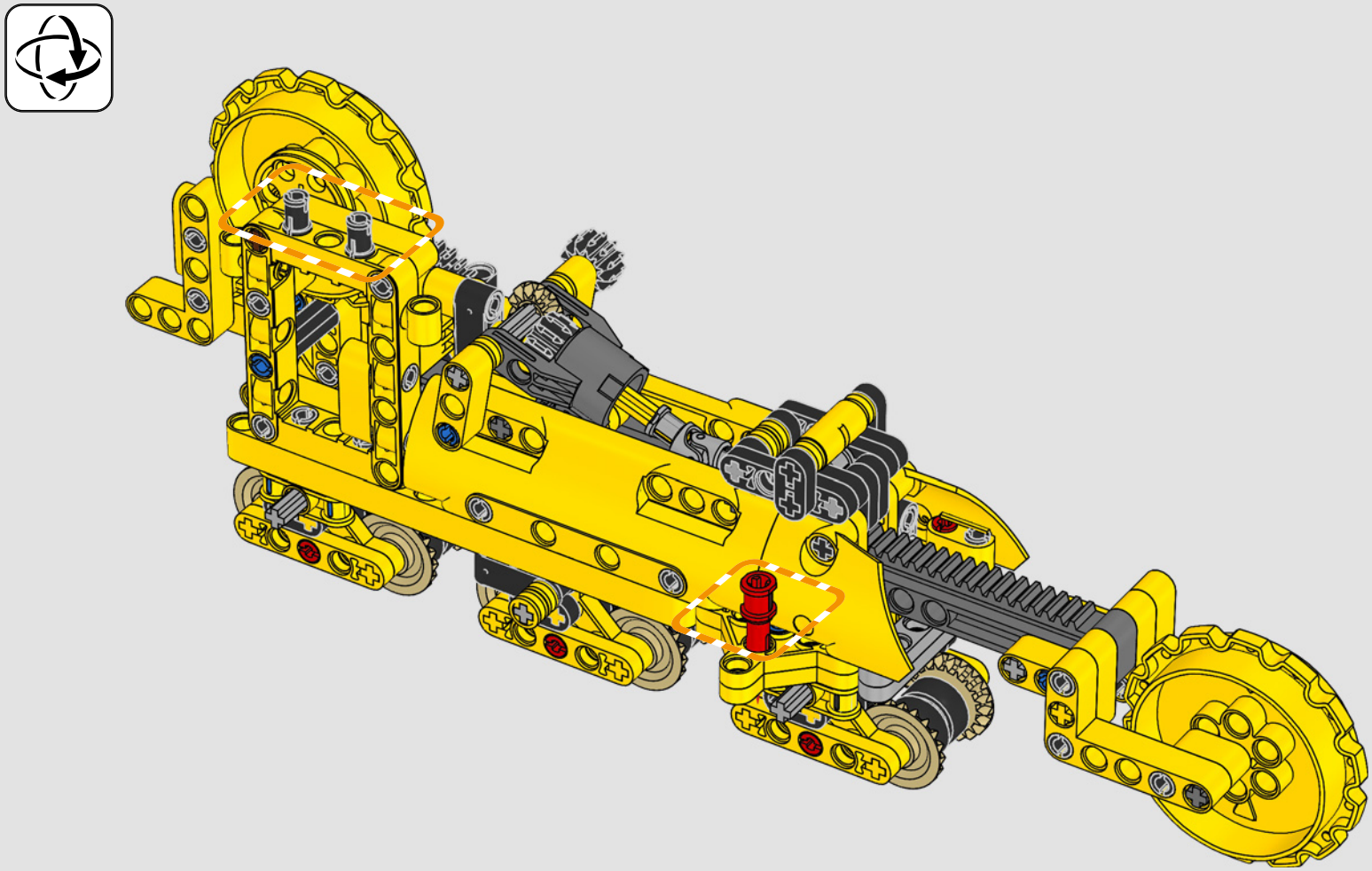

622

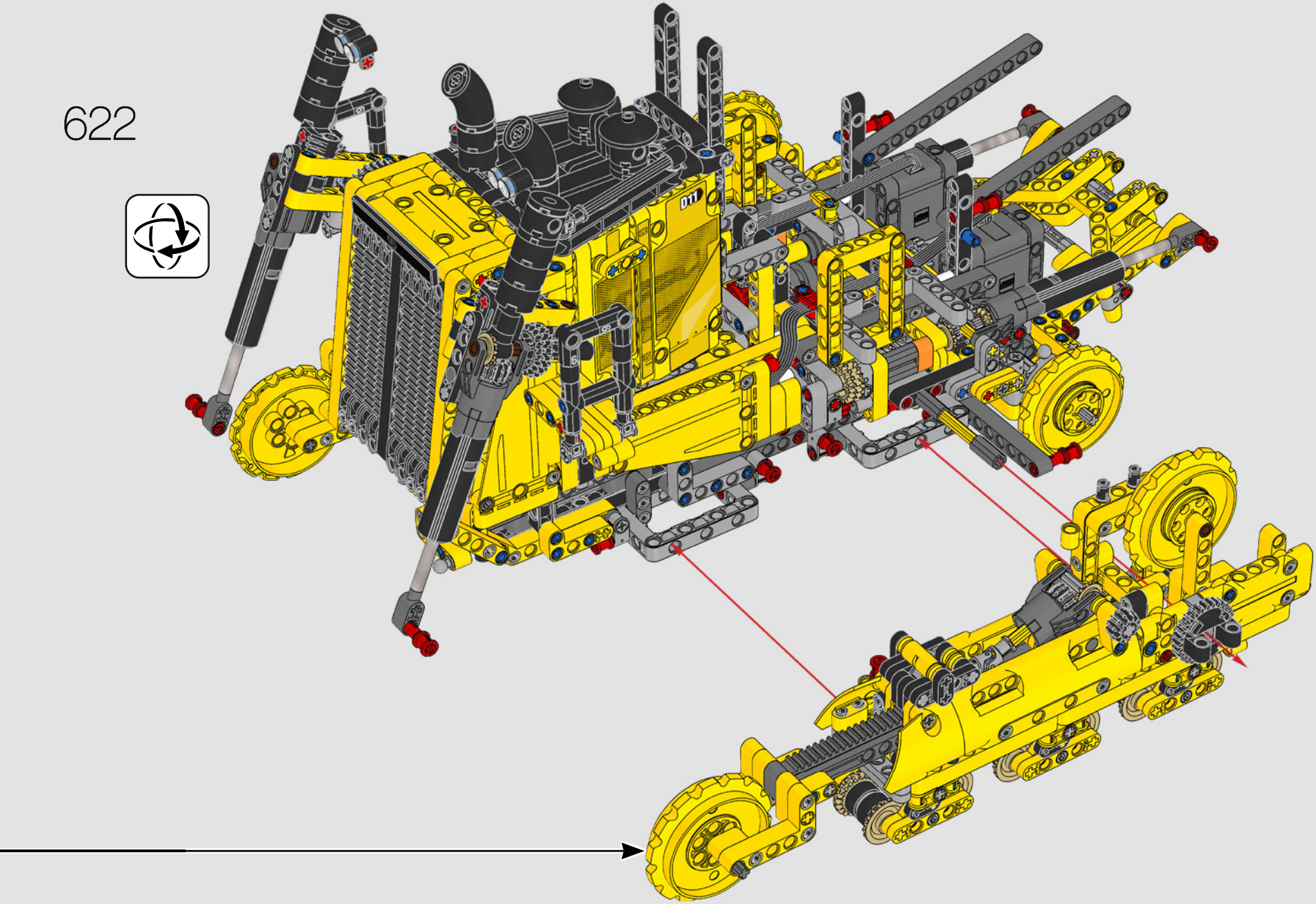

623

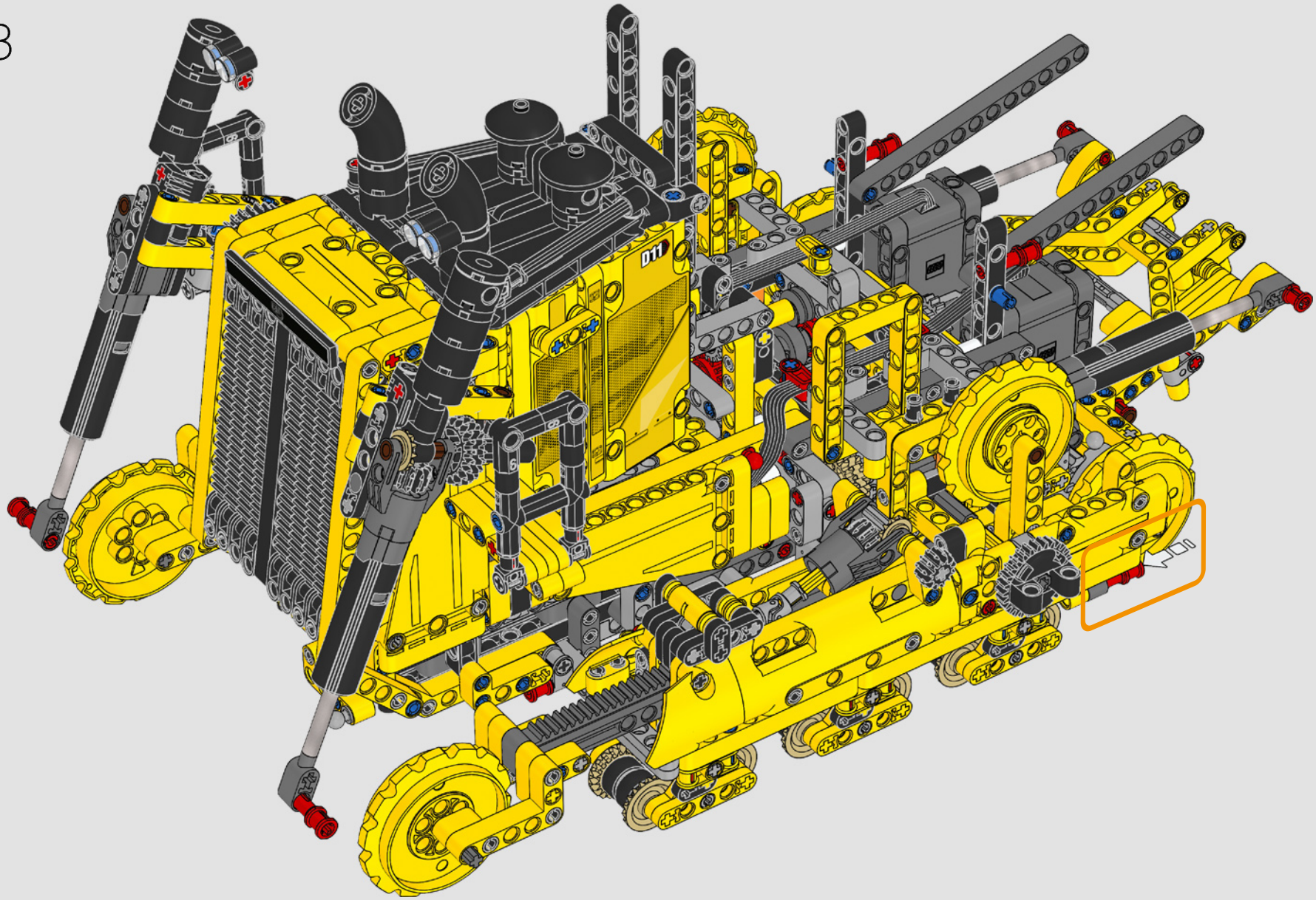

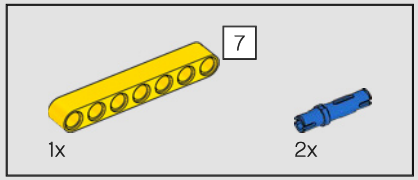

624

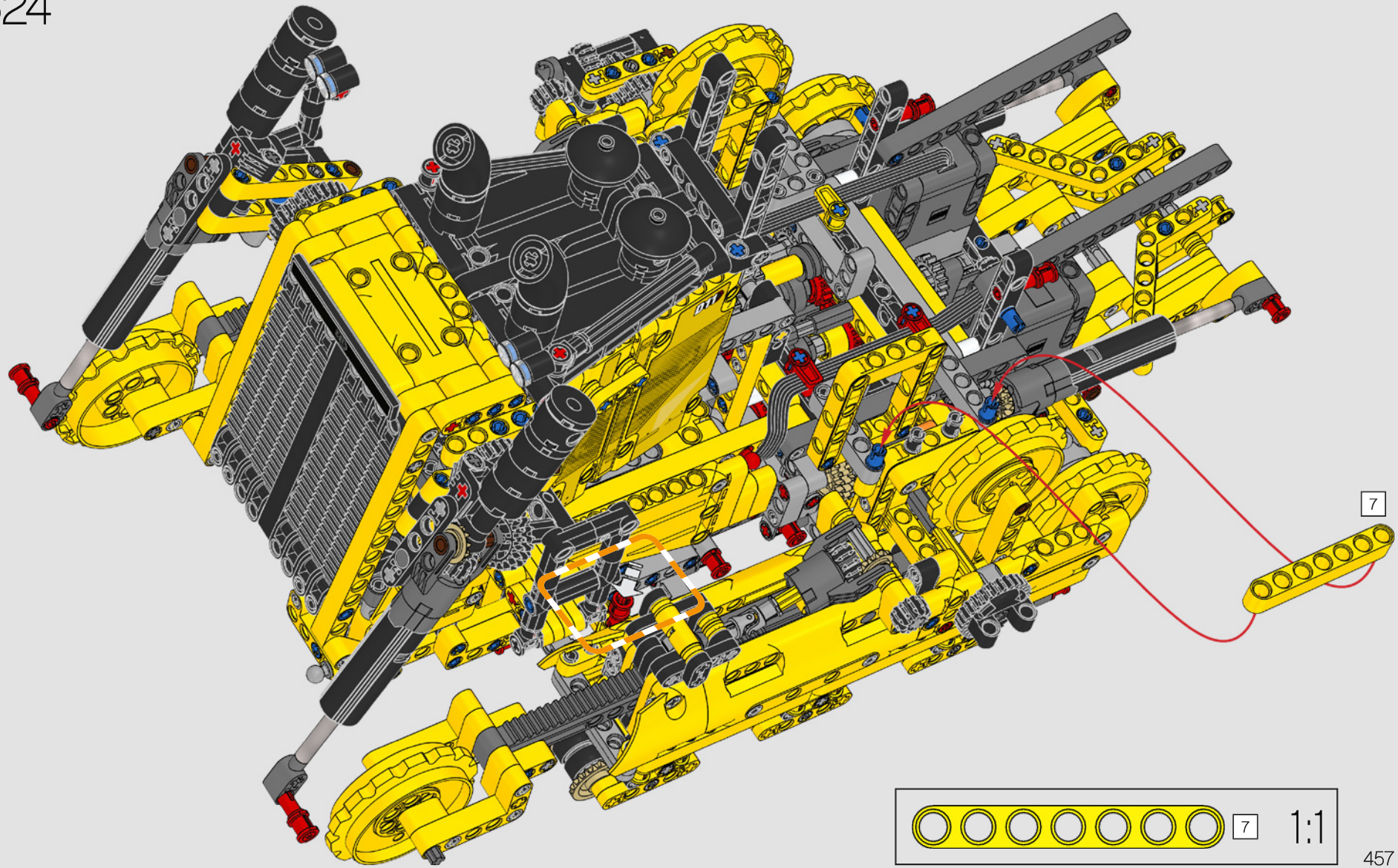

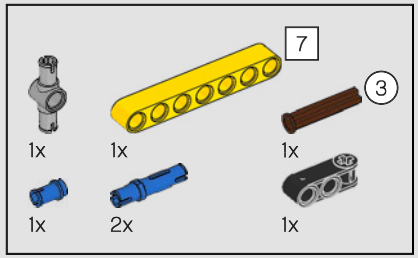

625

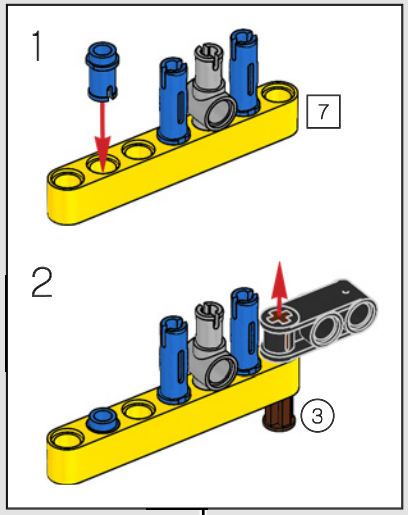

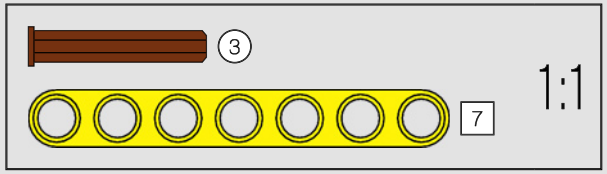

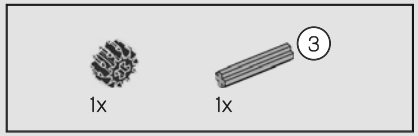

626

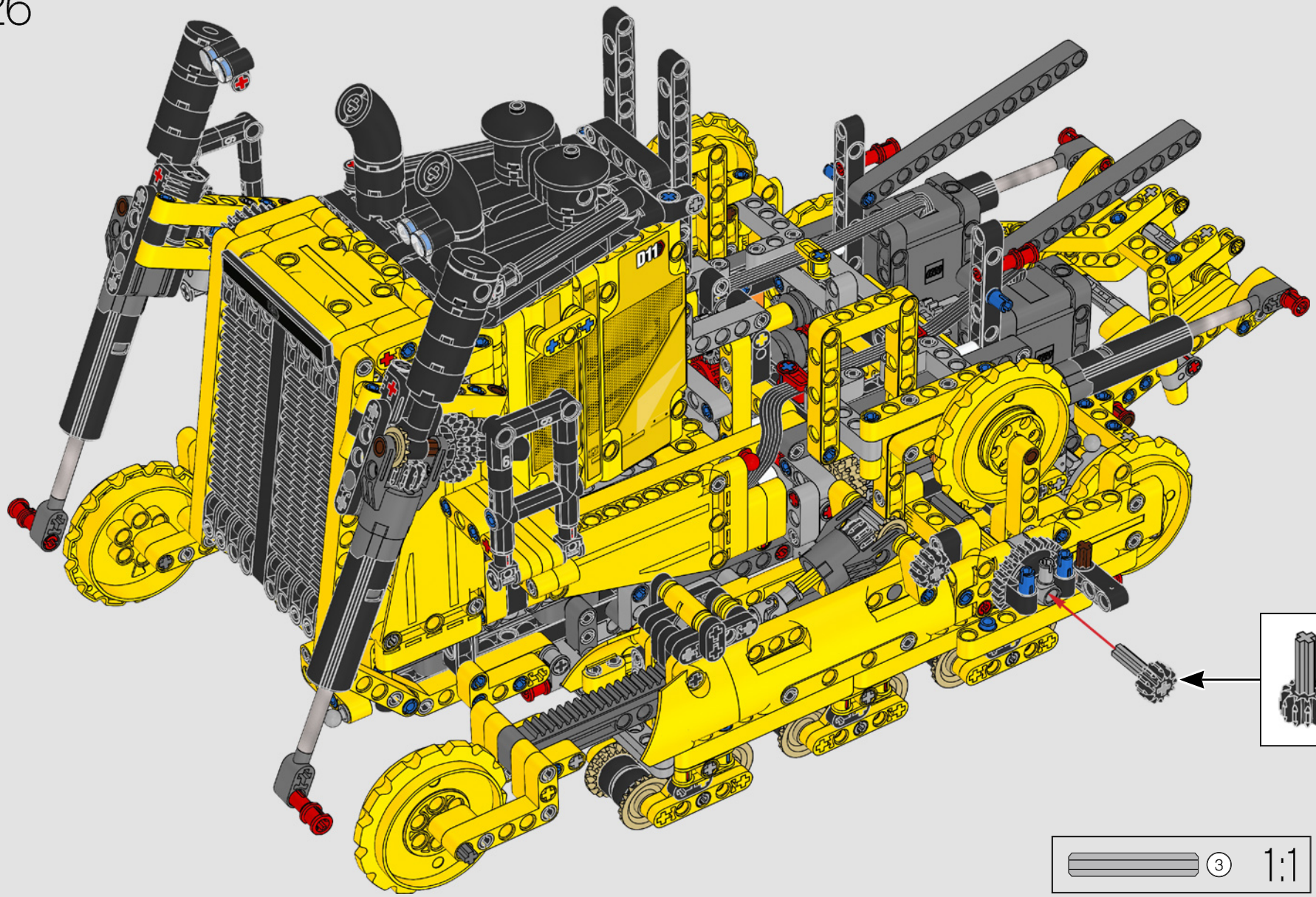

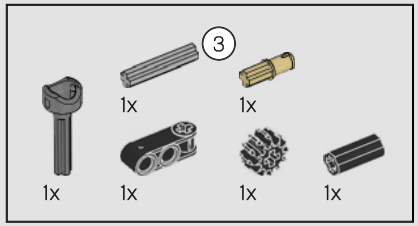

627

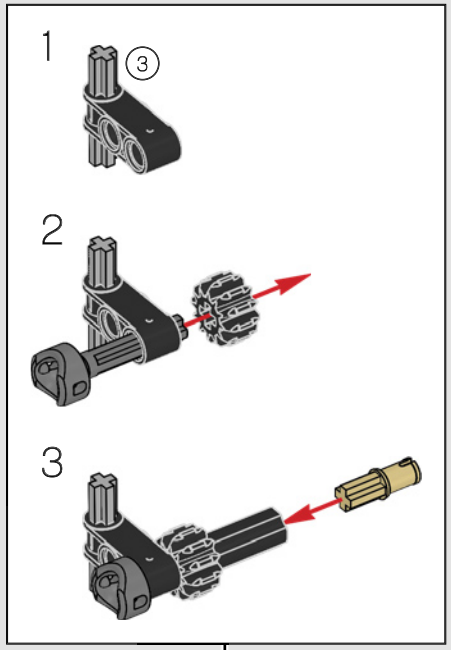

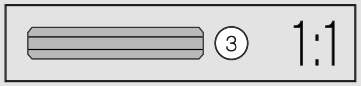

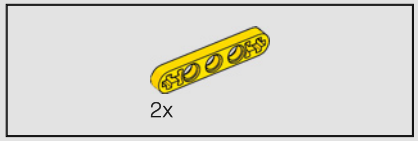

628

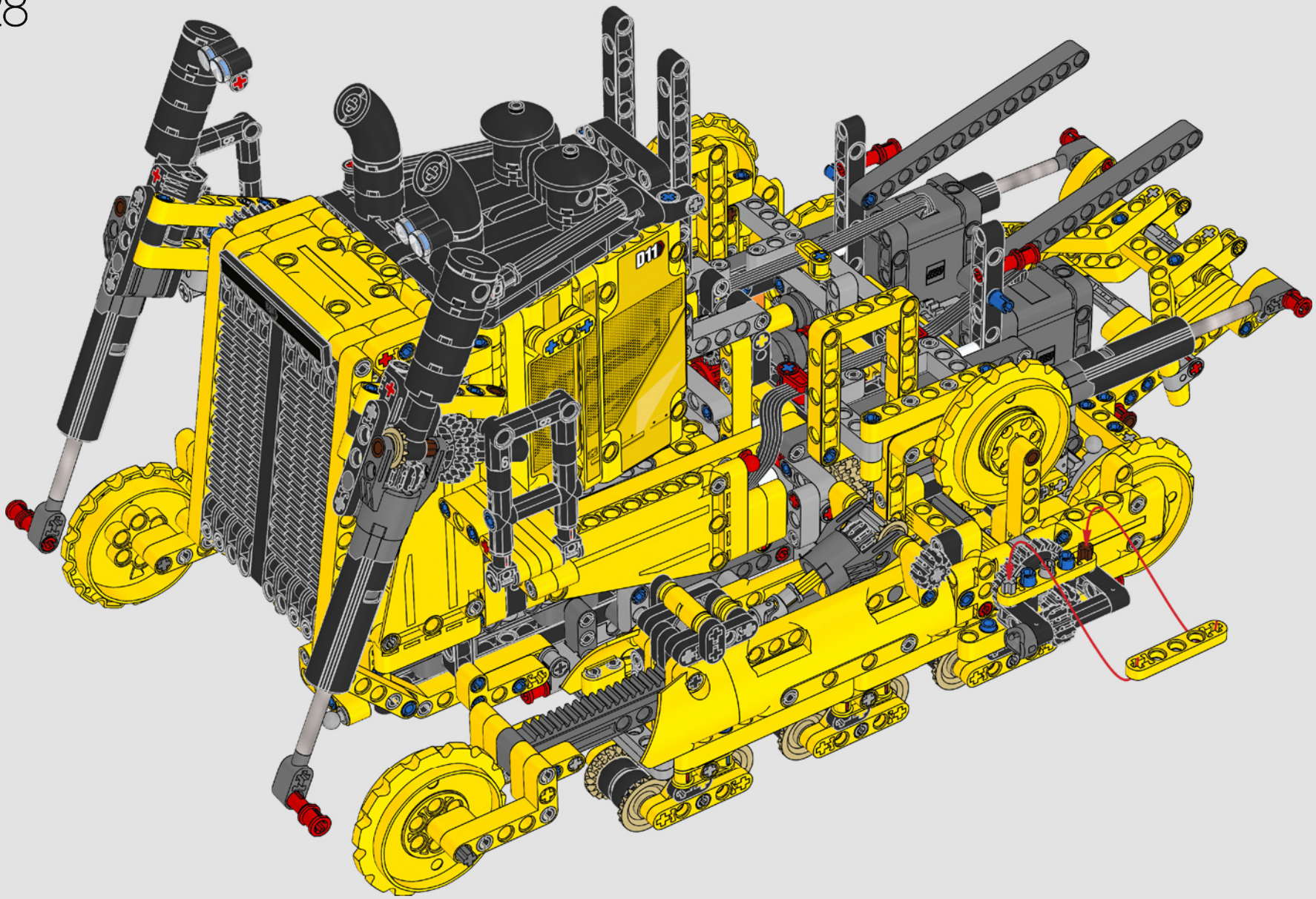

FEEDBACK AND WIN

FEEDBACK
AND **WIN**

Your feedback will help shape the future development of this product series.

Please visit:

FEEDBACK
UND **GEWINNEN**

Dein Feedback trägt zur Weiterentwicklung dieser Produktreihe bei.

Geh auf:

COMMENTEZ
ET **GAGNEZ**

Vos commentaires nous aideront à concevoir les futurs produits de cette gamme.

Rendez-vous sur :

COMENTA
Y **GANA**

Tu opinión nos ayudará a dar forma al desarrollo de esta serie de productos en el futuro.

Visita:

反馈有奖

您的反馈将有助于我们在今后改进本系列产品。

请访问：

LEGO.com/productfeedback

By completing, you will automatically enter a drawing to win a LEGO® set.

Terms & Conditions apply.

Durch Ausfüllen nimmst du automatisch an der Verlosung eines LEGO® Preises teil.

Es gelten die Teilnahmebedingungen.

En envoyant vos commentaires, vous serez automatiquement inscrit(e) à un tirage au sort qui vous permettra de remporter un prix LEGO®.

Offre soumise à conditions.

Al contestar, participarás automáticamente en el sorteo y podrás ganar un set LEGO®.

Sujeto a Términos y Condiciones.

完成我们的反馈调查，即可自动进入抽奖环节，赢取乐高®套装。

适用《条款和条件》。

LEGO and the LEGO logo are trademarks of the LEGO Group. ©2021 The LEGO Group.

©2021 Caterpillar. All Rights Reserved. CAT, CATERPILLAR, LET'S DO THE WORK, their respective logos, "Caterpillar Yellow", the "Power Edge" and Cat "Modern Hex" trade dress as well as corporate and product identity used herein, are trademarks of Caterpillar and may not be used without permission. The LEGO Group, a licensee of Caterpillar Inc.

2608
CAT
D11

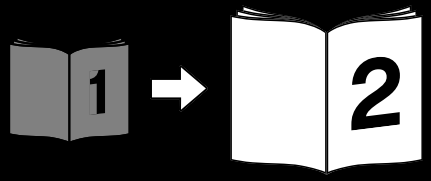

6412799