LEGO TECHNIC

42239

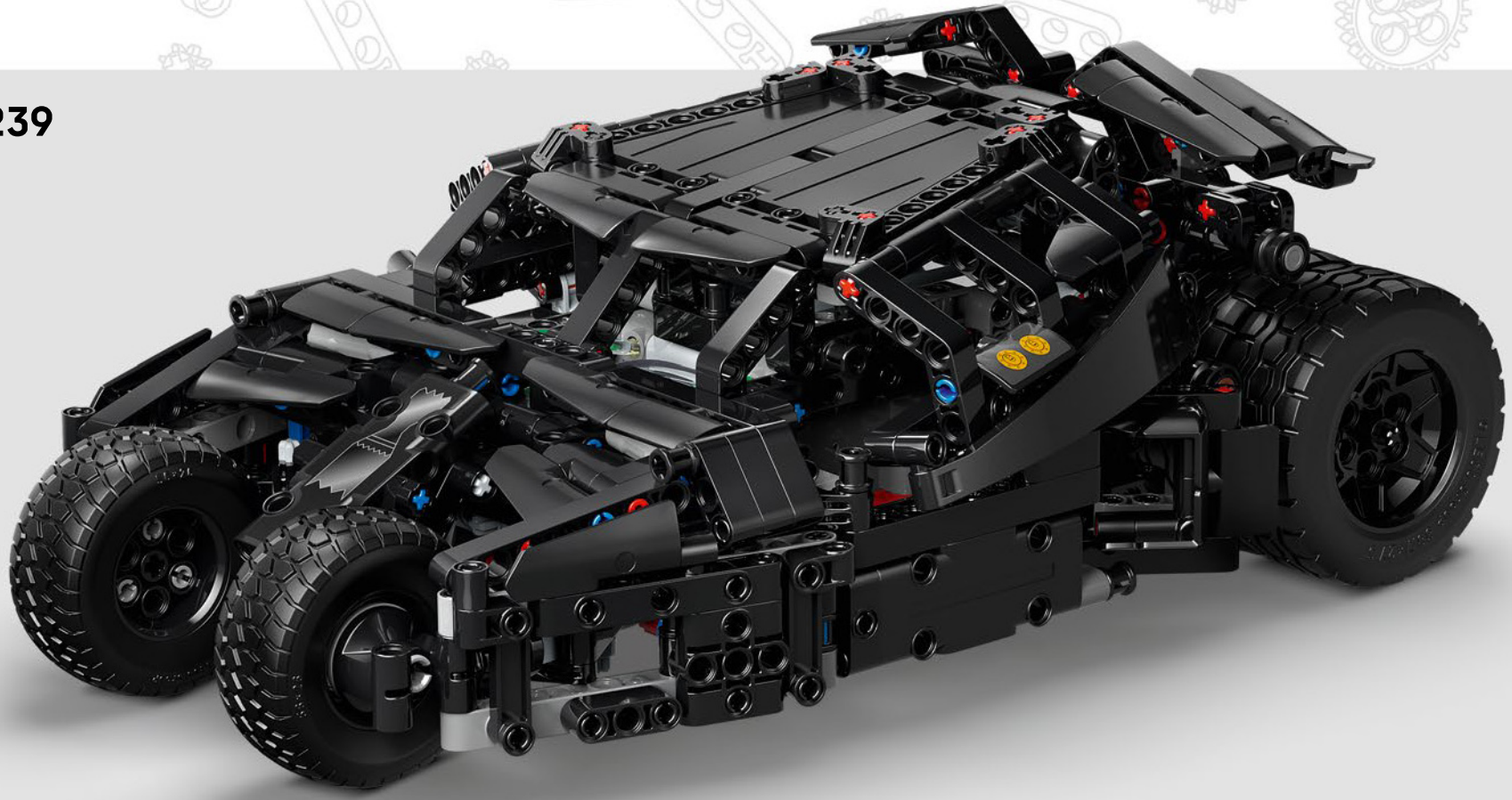

1

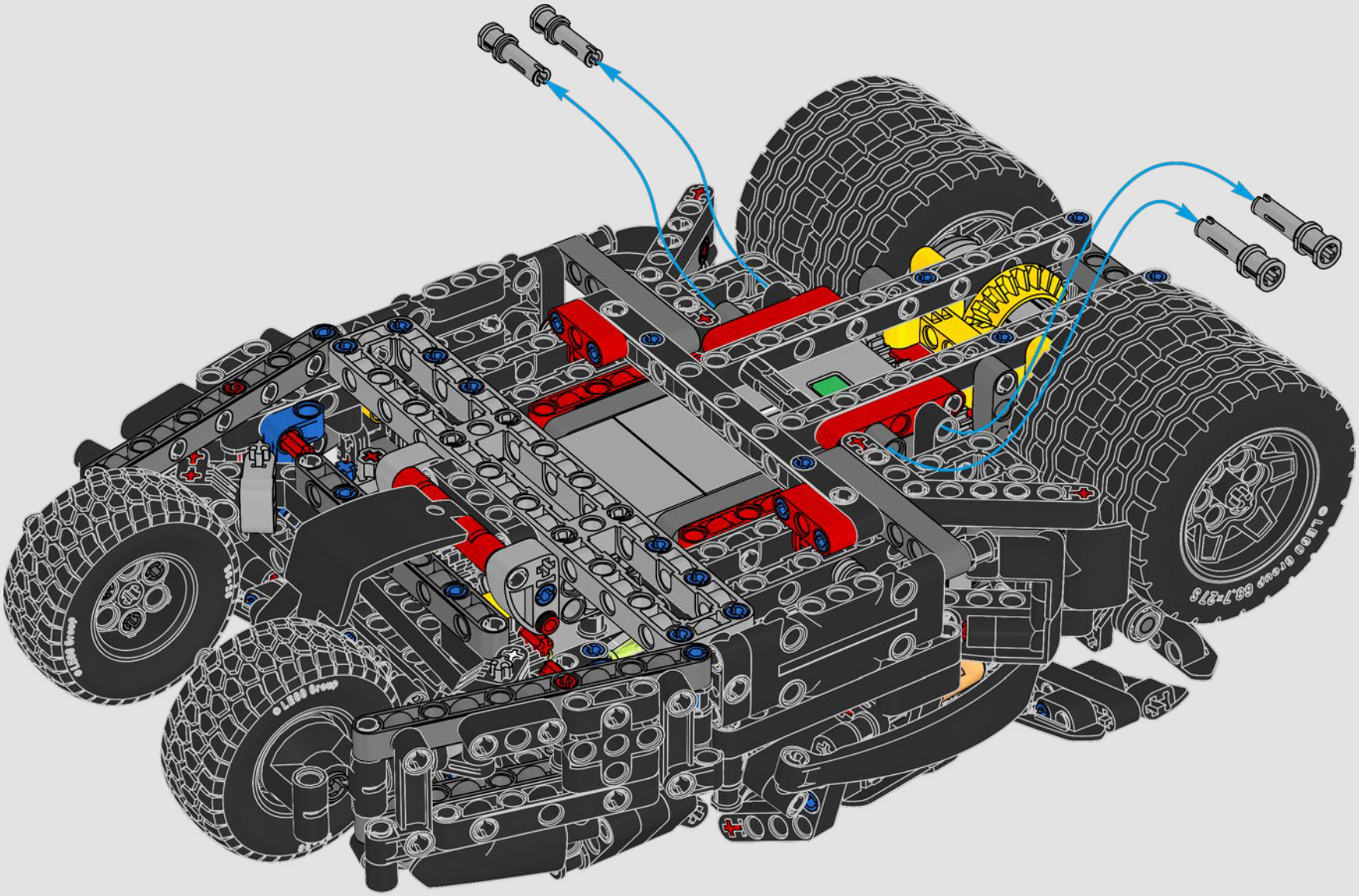

2

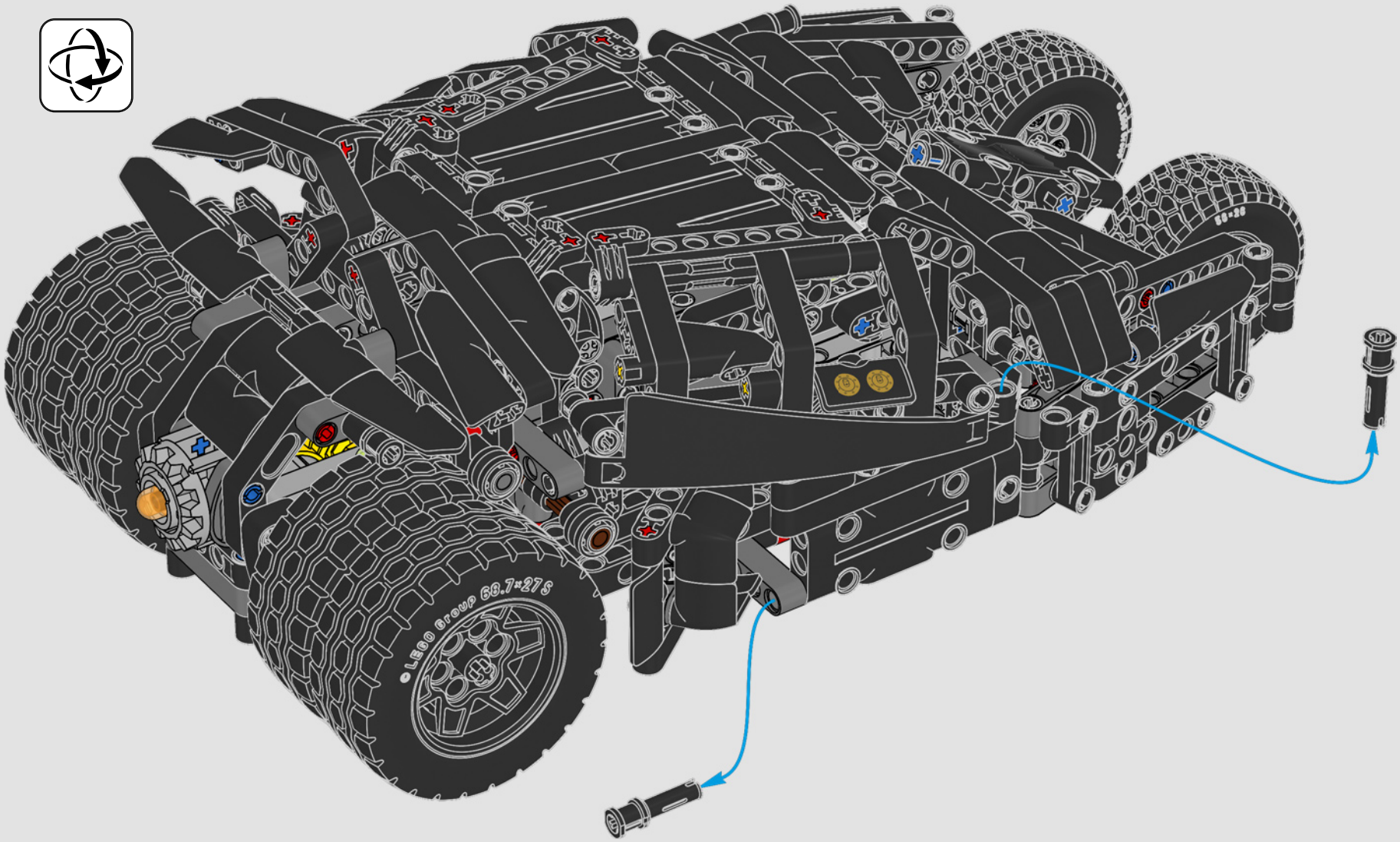

3

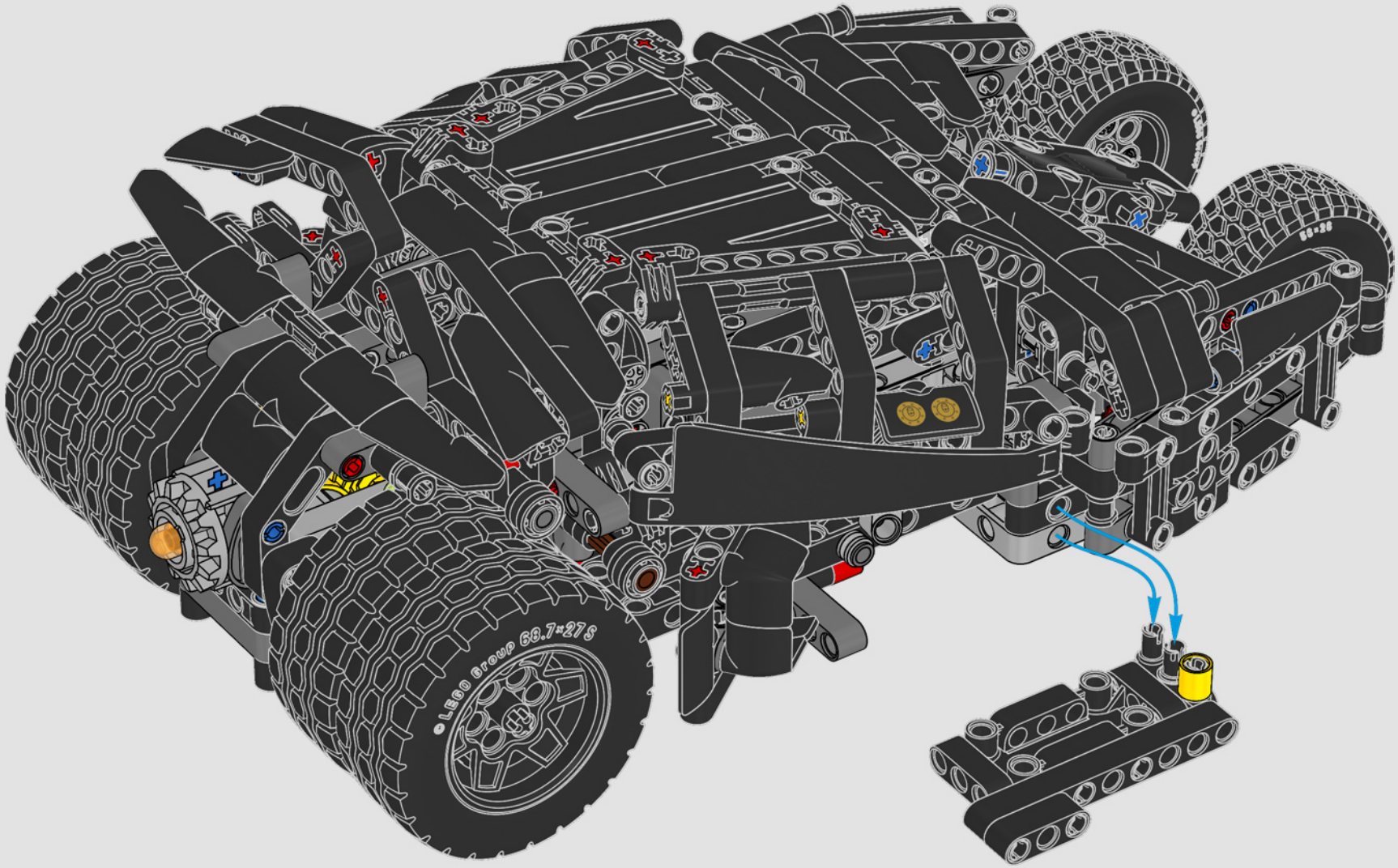

4

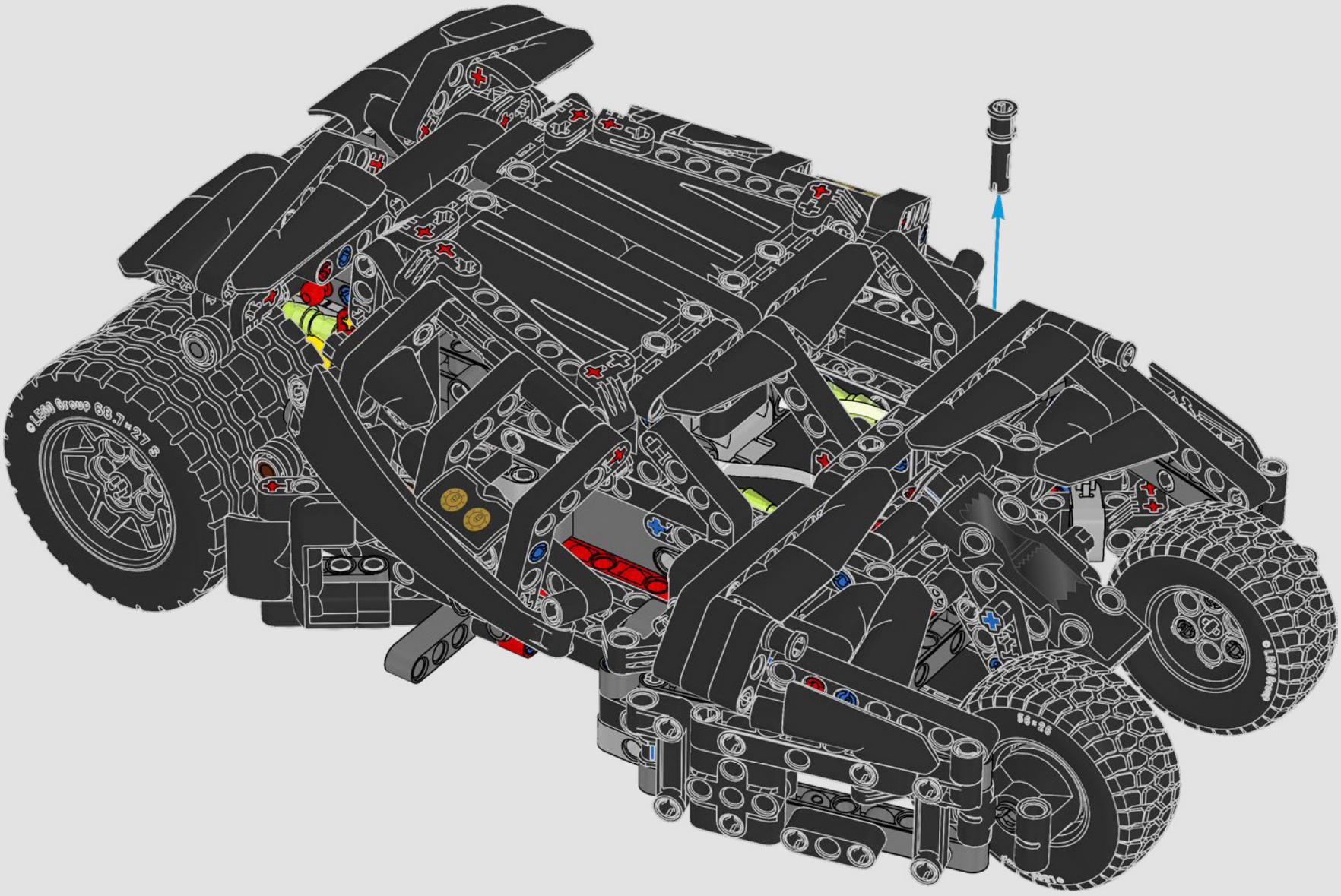

5

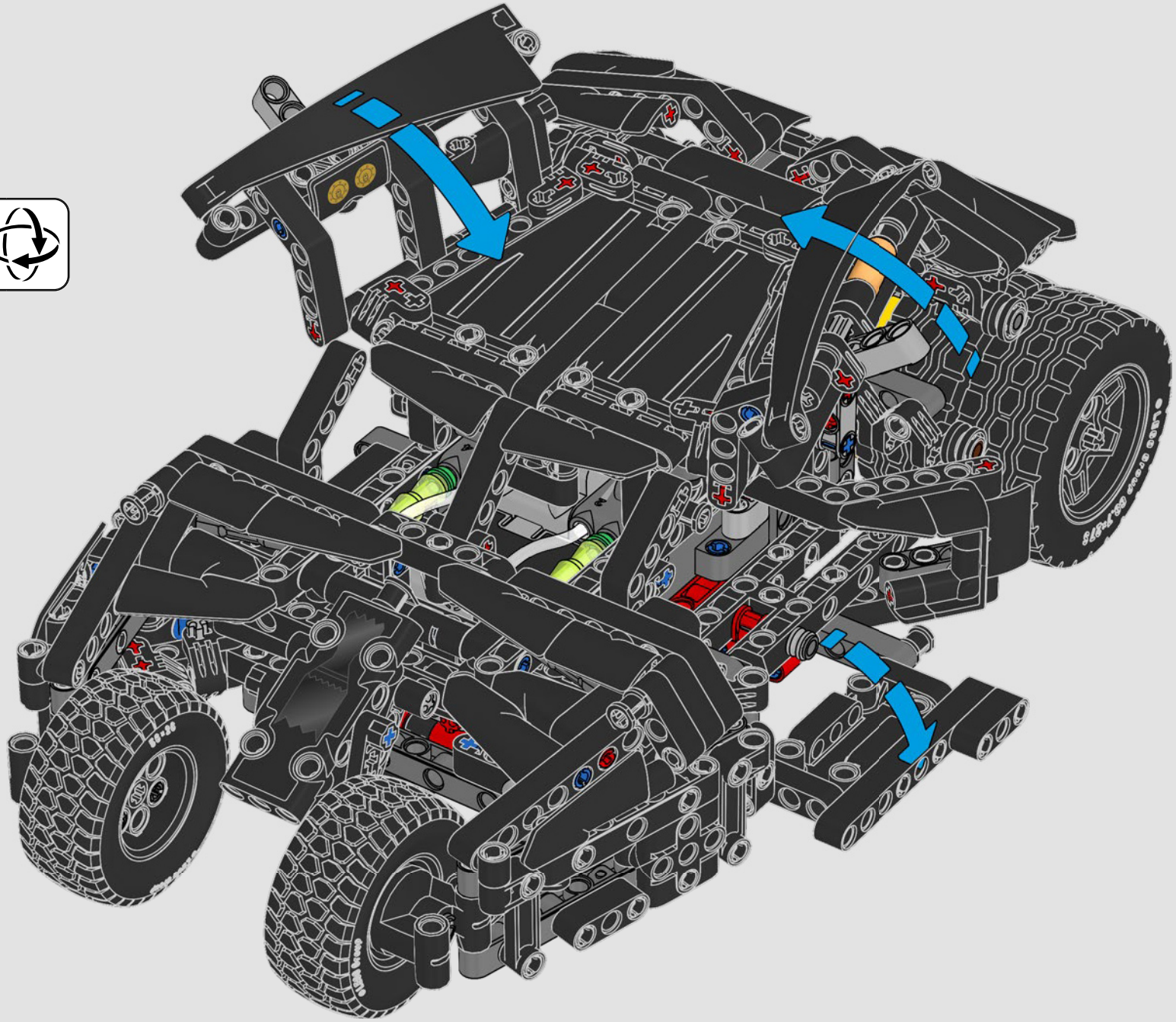

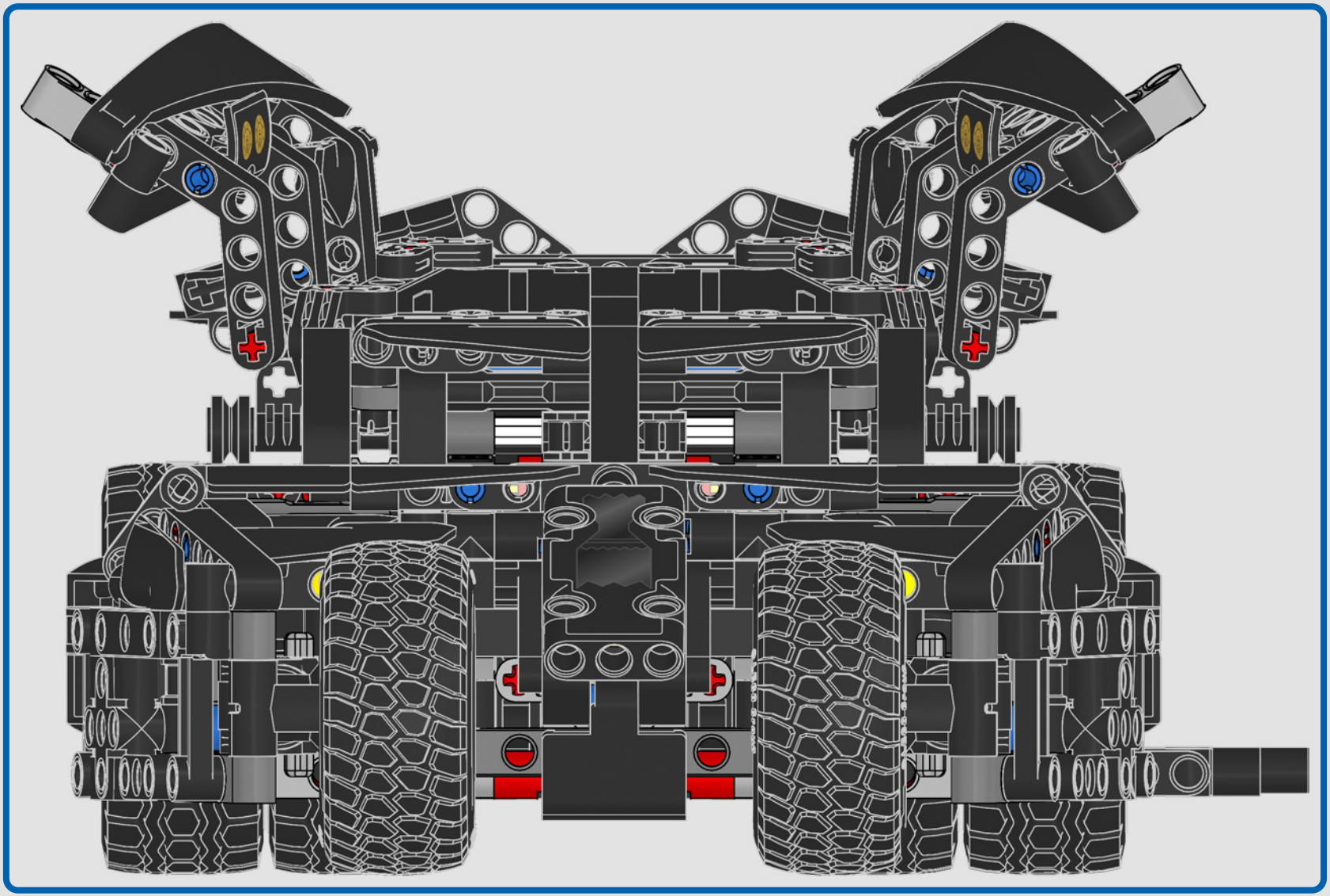

6

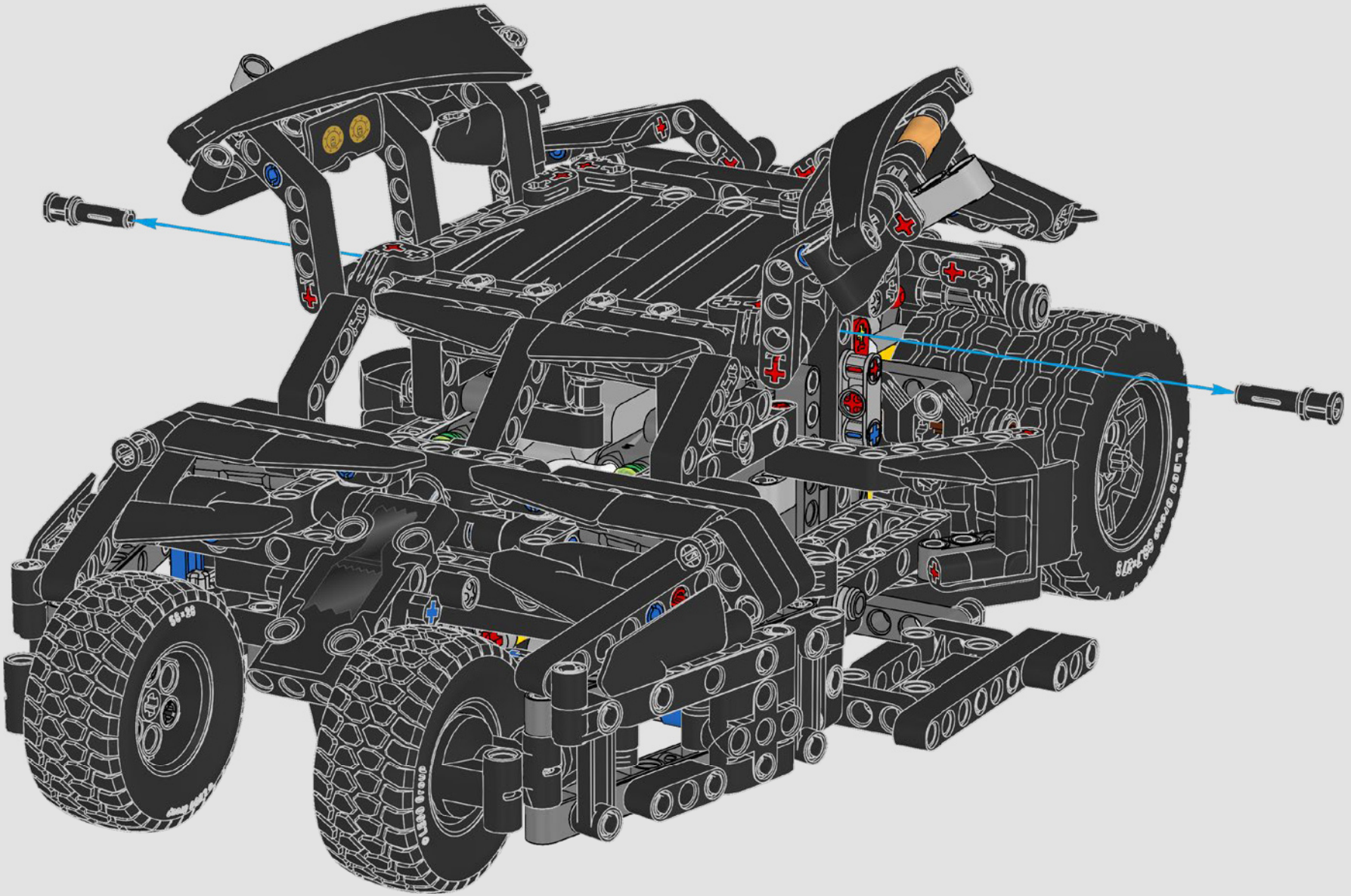

7

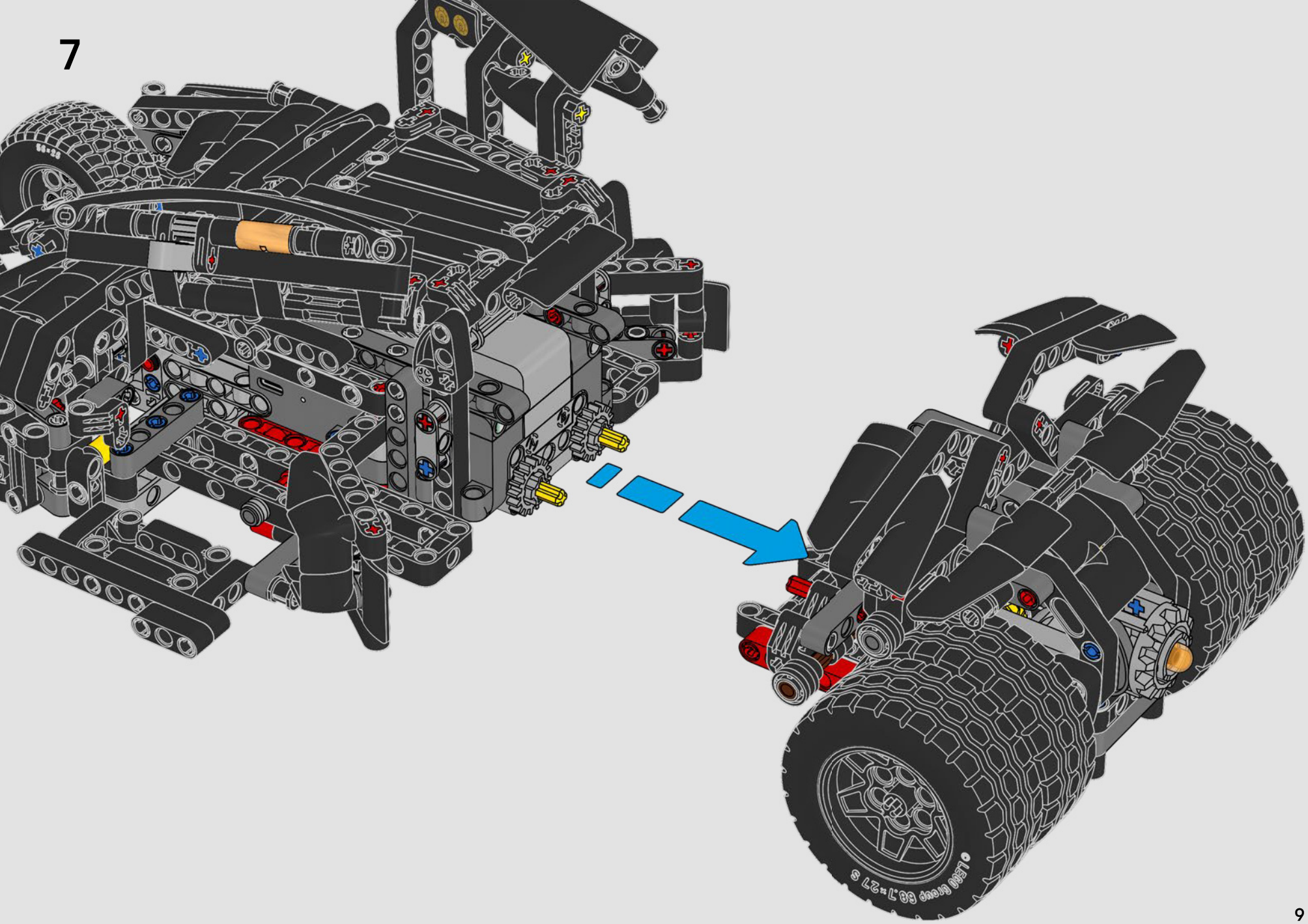

8

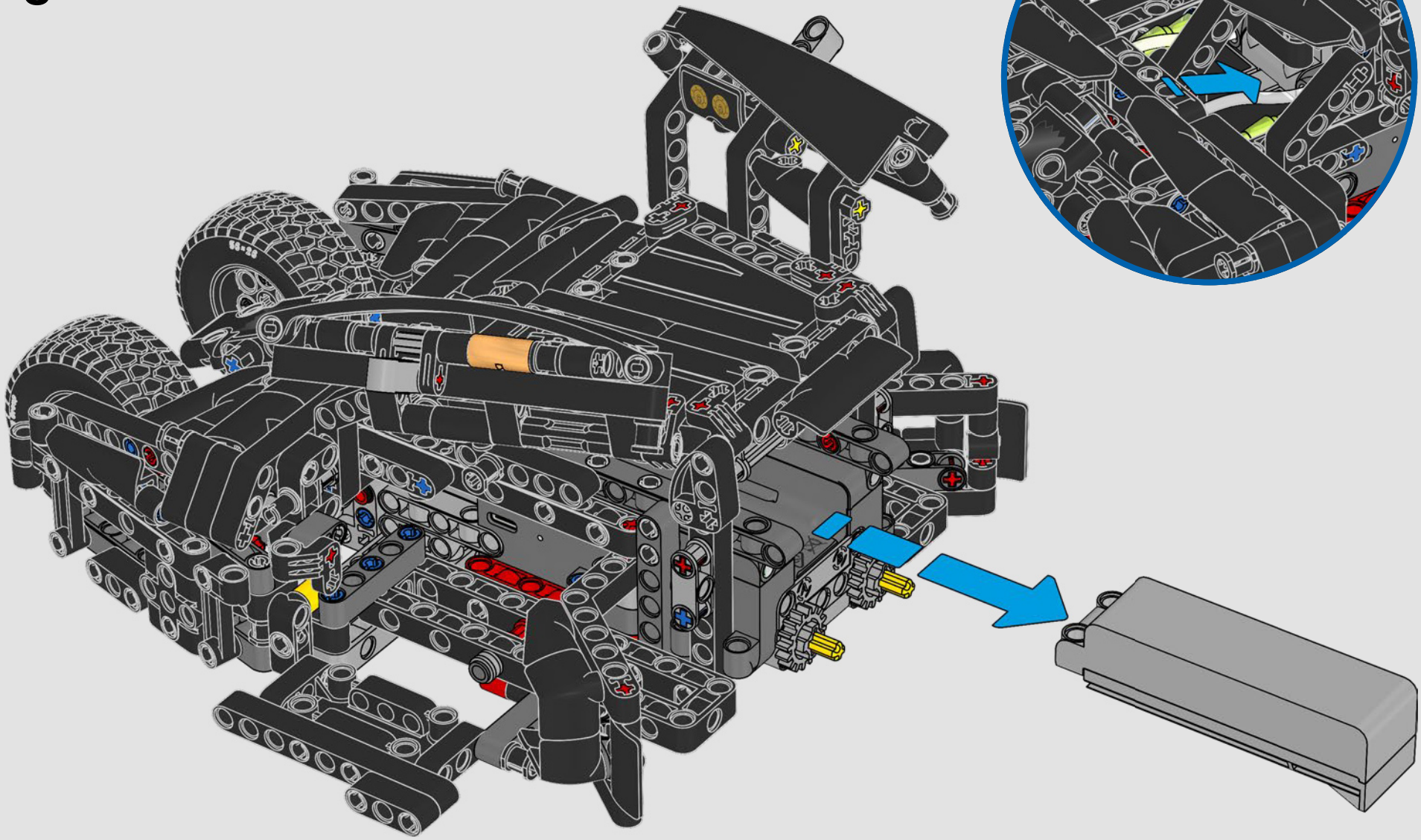

9

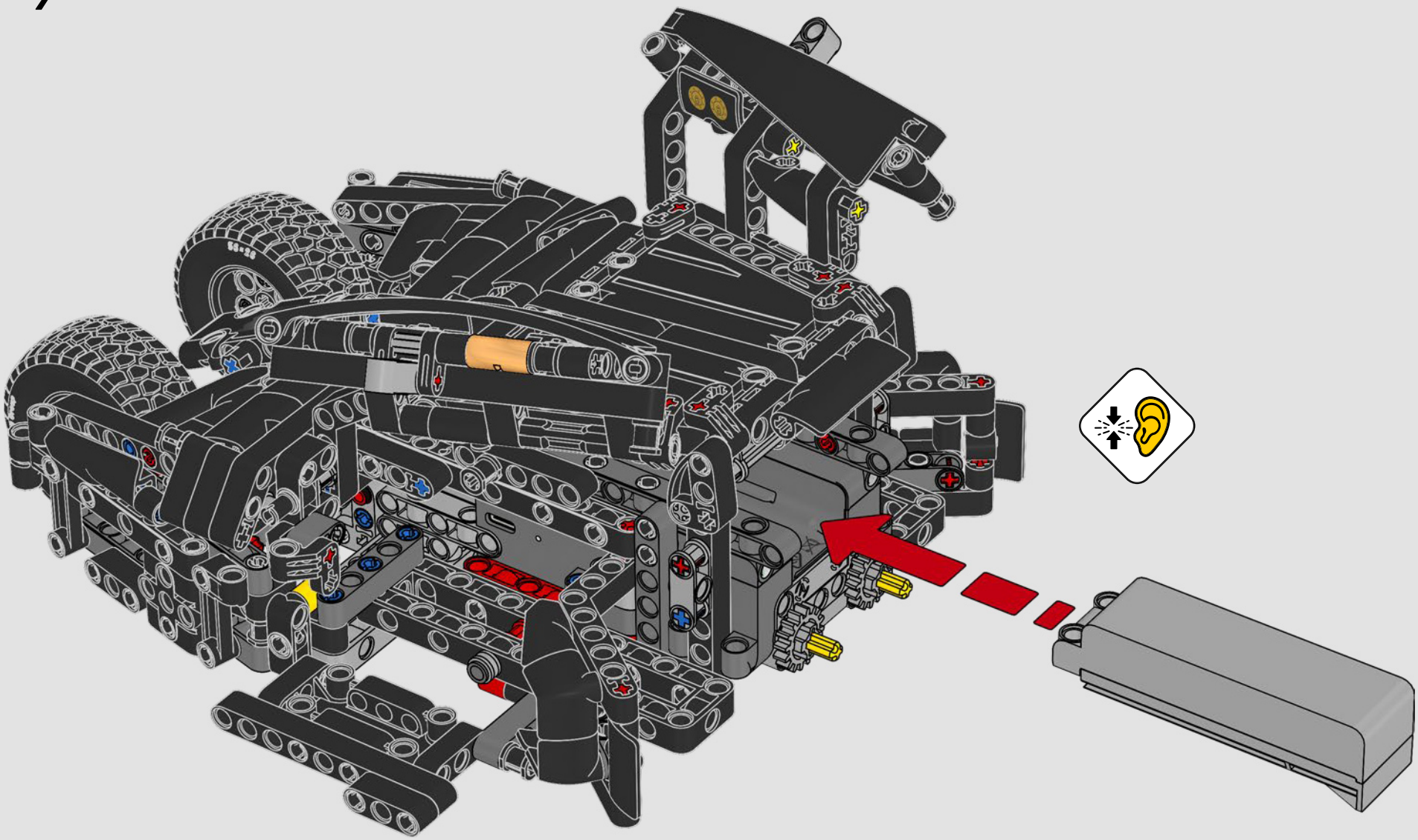

10

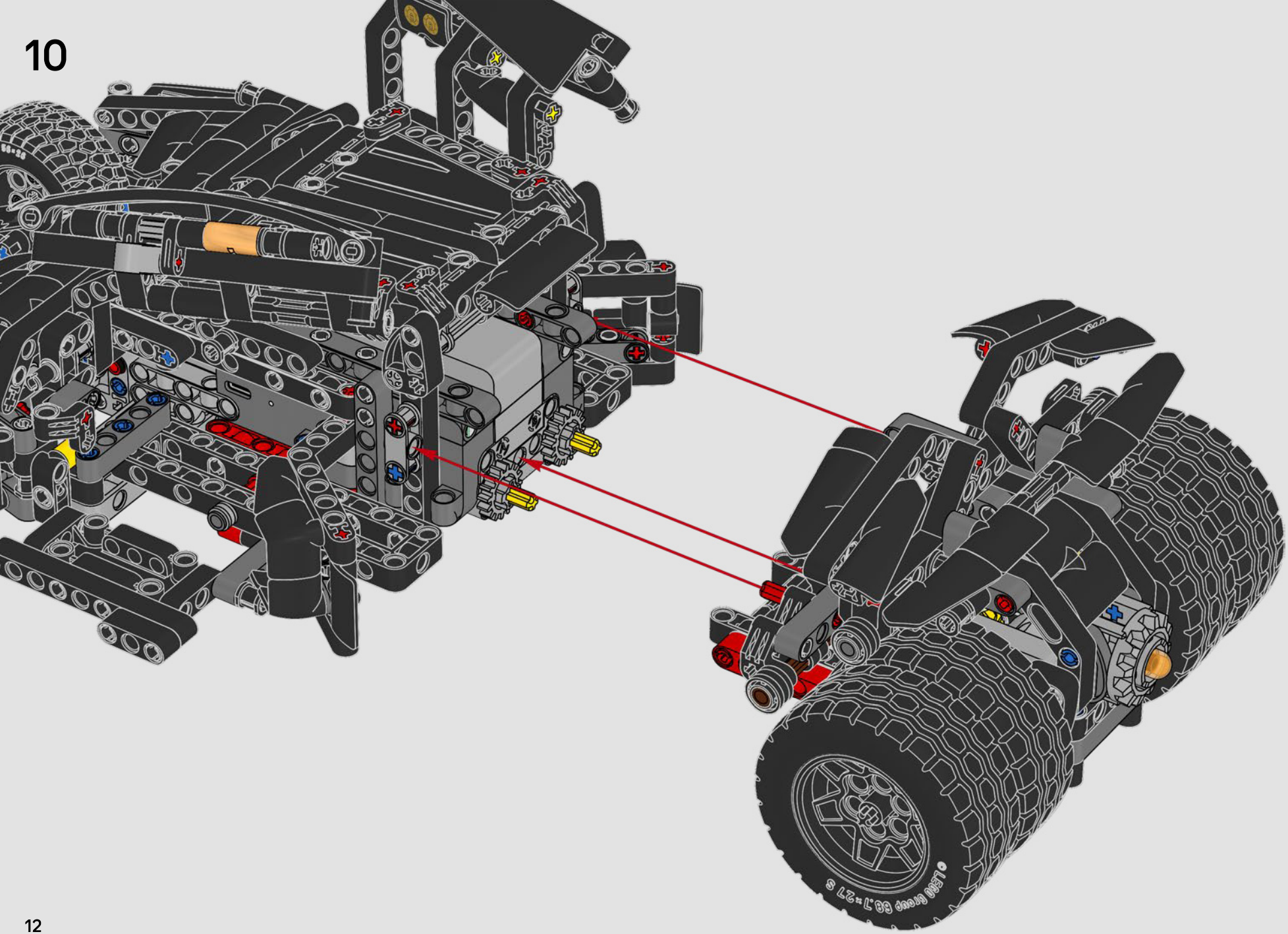

11

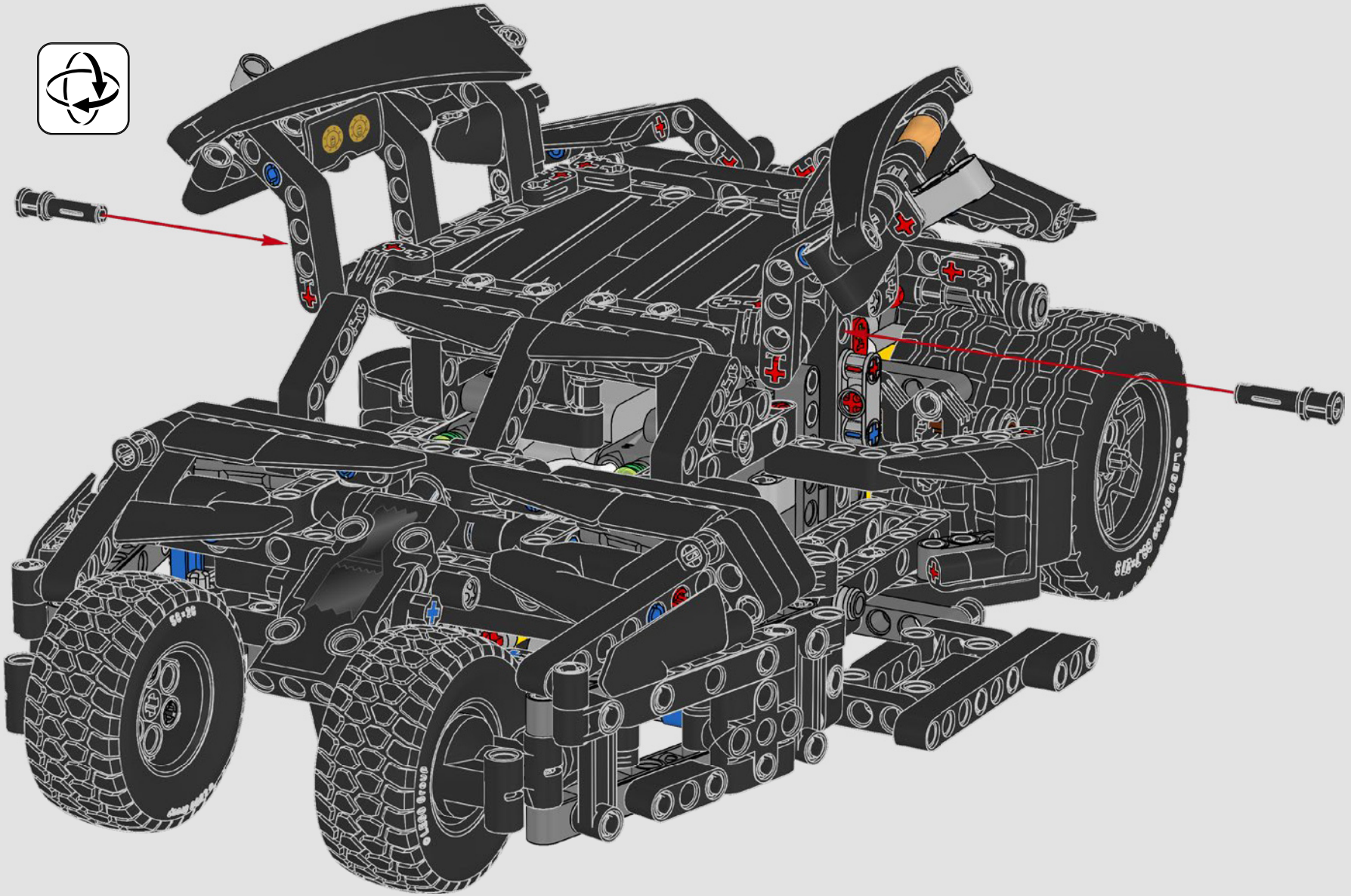

12

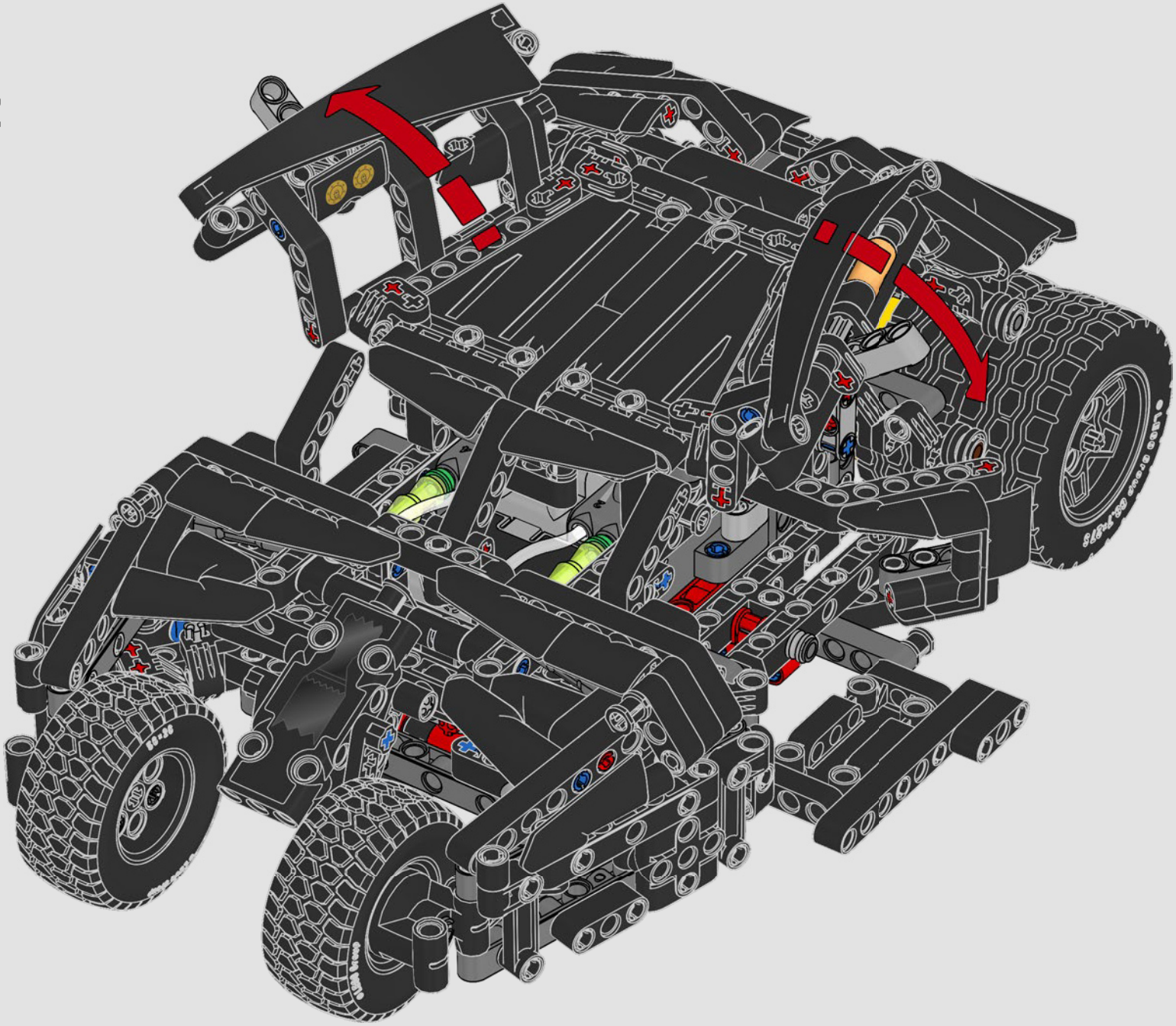

13

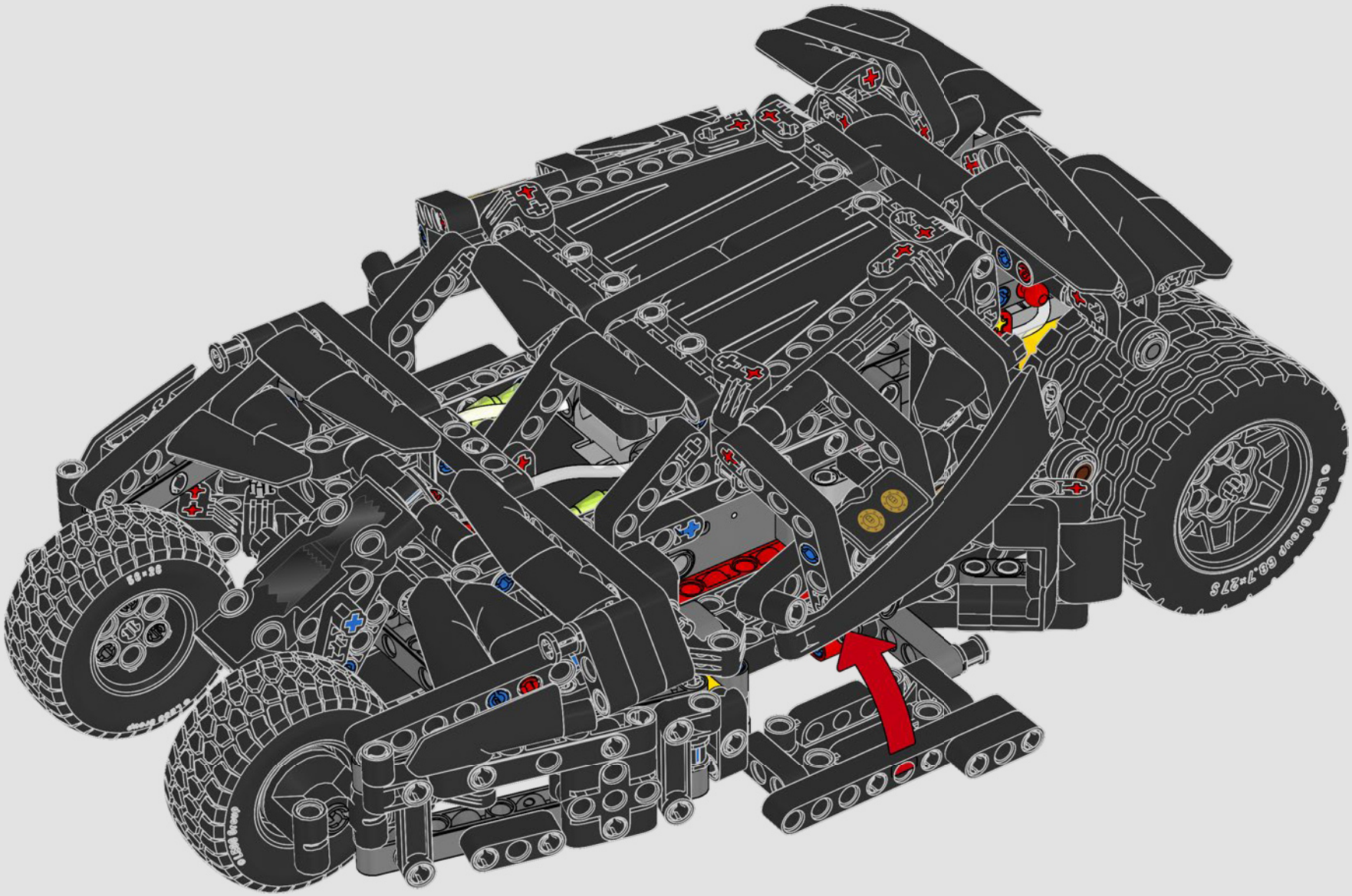

14

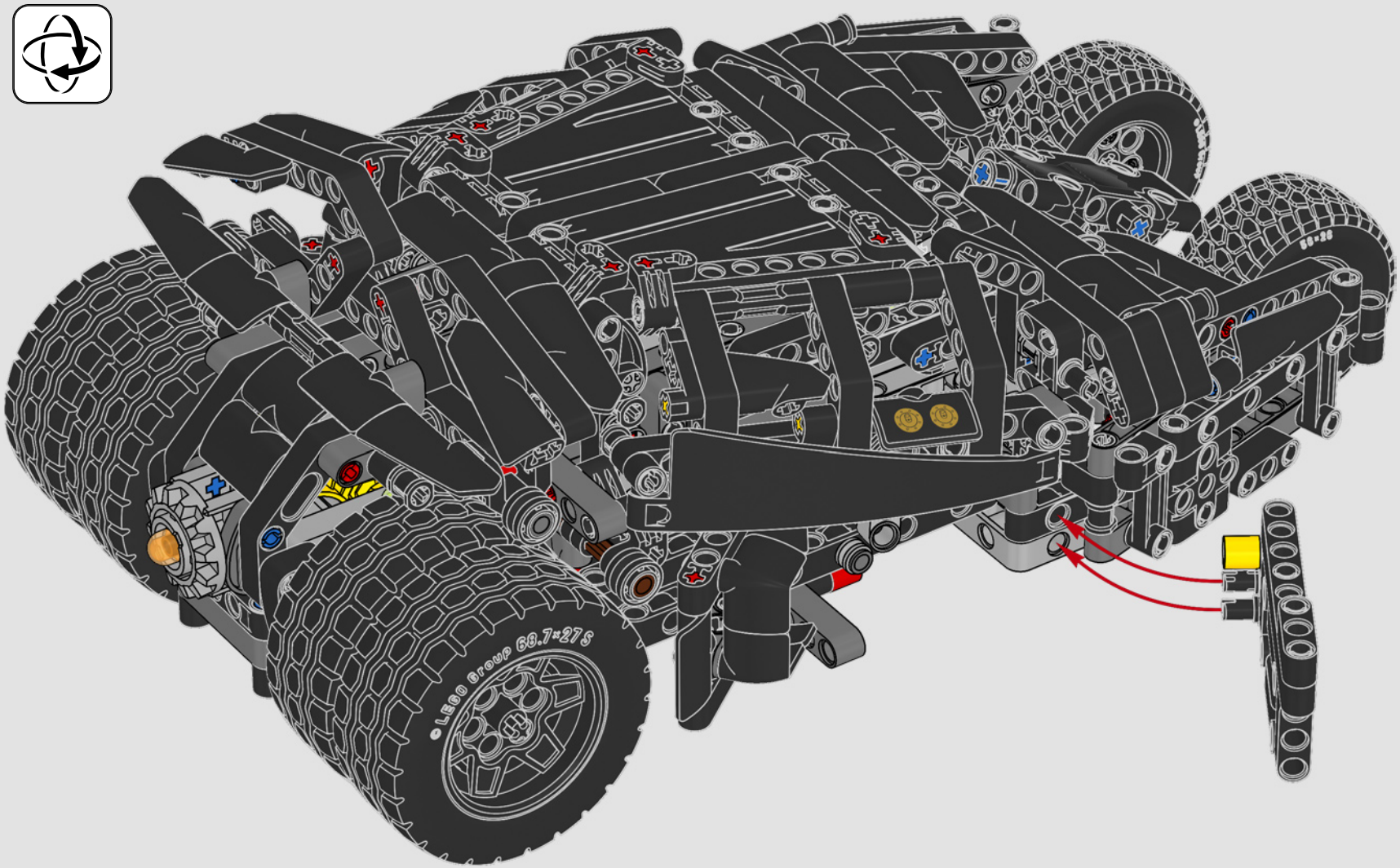

15

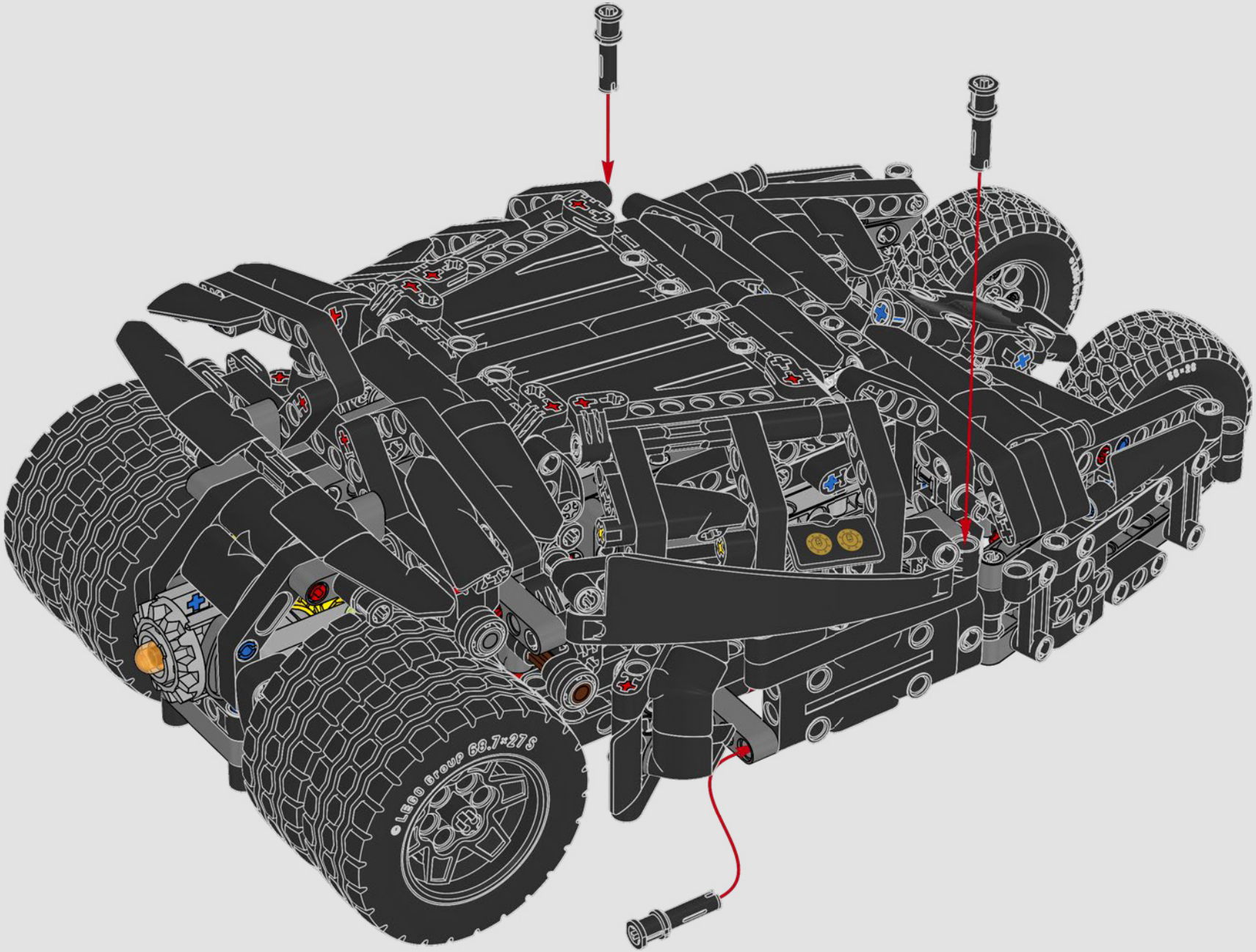

16

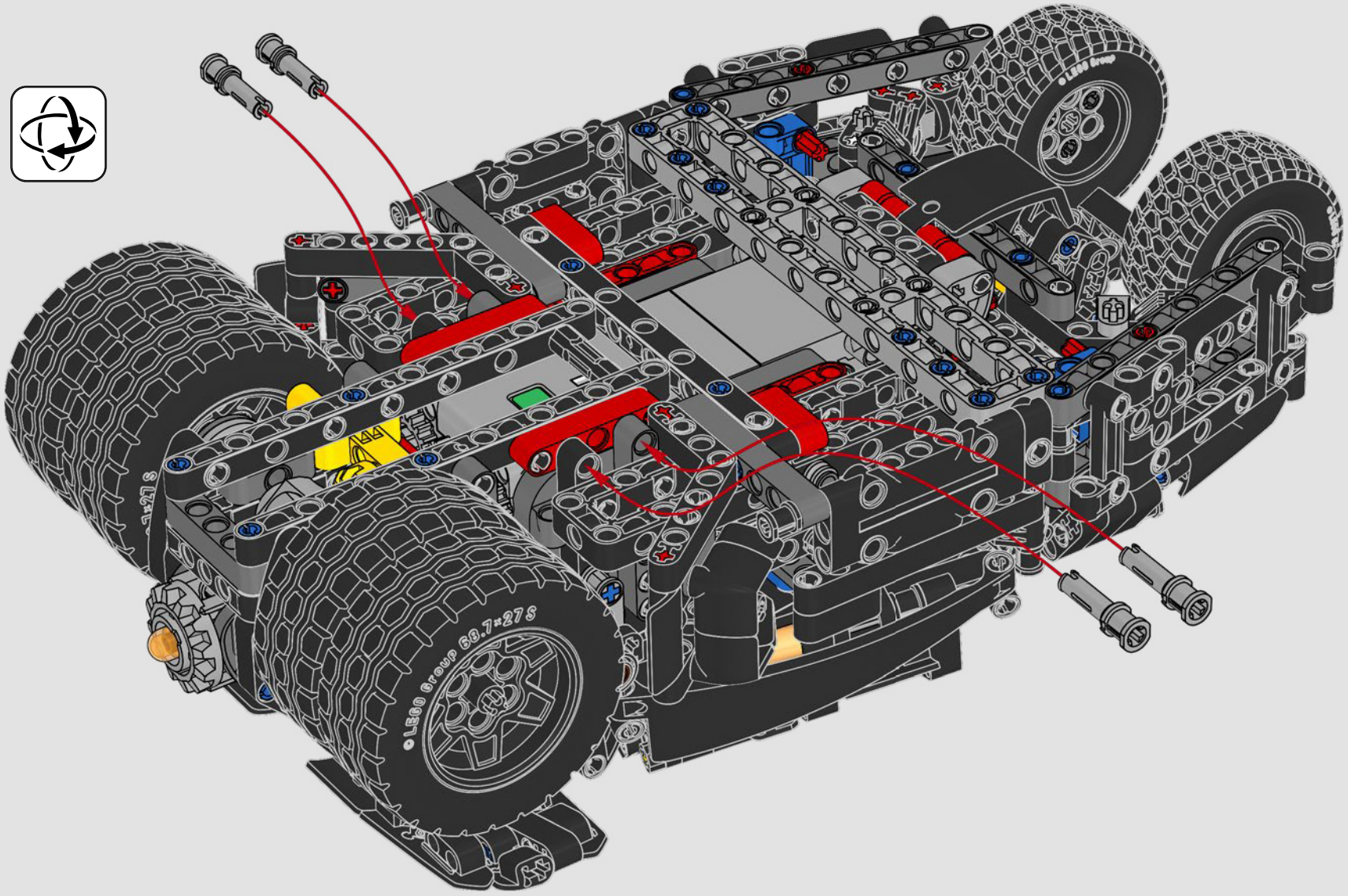

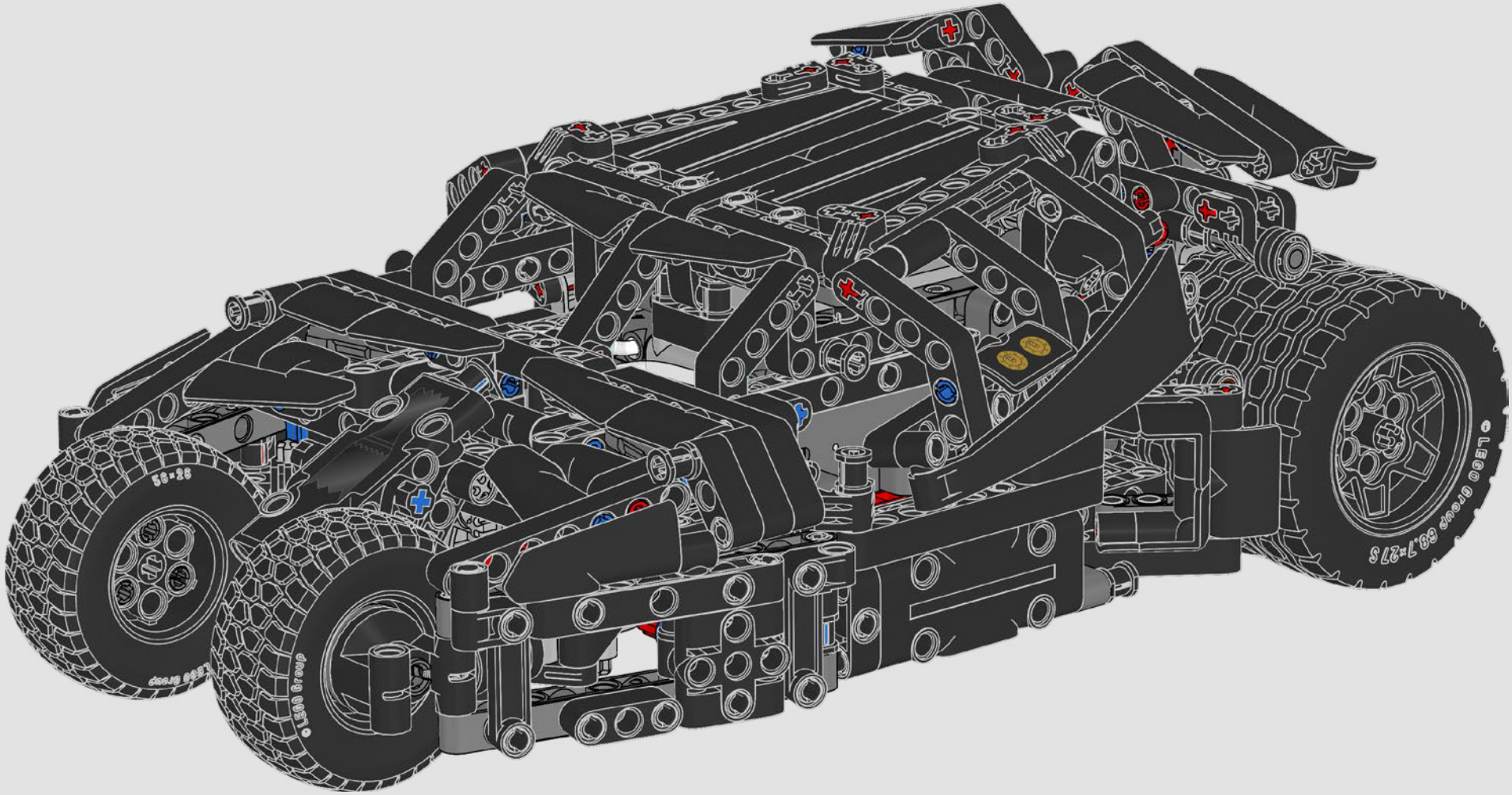
56×26
LEGO Group
LEGO Group 68.7×27S

LEGO and the LEGO logo are trademarks of the/sont des marques de commerce du/son marcas registradas de LEGO Group. ©2026 The LEGO Group.
The Dark Knight Trilogy and all related characters and elements are © & ™ DC and Warner Bros. Entertainment Inc. (s26)