Product no:	

REV.	DESCRIPTION	DATE
A	INITIAL RELEASE	11-10-2023

Packing instruction
Stage:Carton Assembly

Notes:
*8 unit/layer
*6 layer /Carton
*48 Units/carton

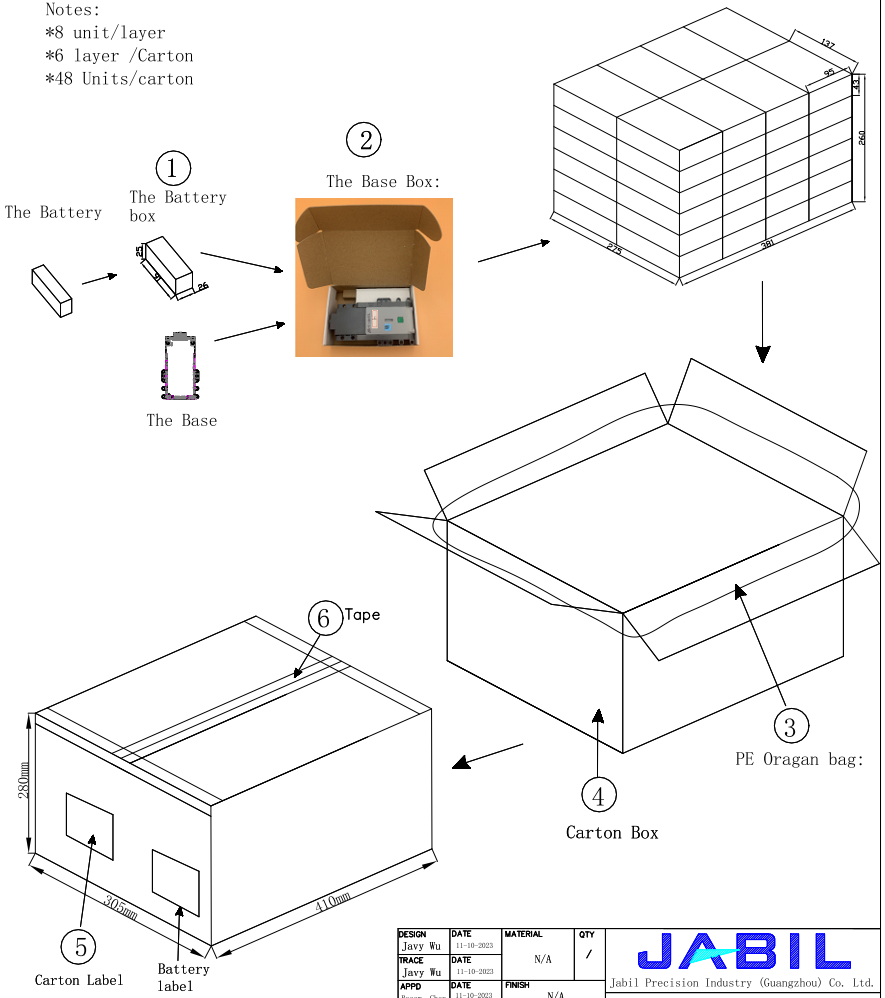

Item #	Jabil China P/N	Description	Qty
6	CL-8ZT00025AGEN-LF	Packing Tape	TBD
5	CM-7K0000050KBL-C	Carton Label	1/48
4	LS-9TE0000111A-C	Carton Box 410*305*280mm 11kg FSC	1/48
3	LS-8PE0000117A-C	PE oragan bag 410*TSD40, 075mm	1/48
2	LS-9BX0000080A-C	Base Box 137*605*43mm FSC	1/4
1	LS-9BX0000007:B-C	Battery box 260*250*8mm FSC	3/1

DESIGN	DATE	MATERIAL	QTY
Javy Wu	11-10-2023	N/A	/
TRACE Javy Wu	DATE 11-10-2023	FINISH N/A	
APPD Bacon Chen	DATE 11-10-2023	MODEL NO N/A	
CKD N/A	DATE N/A		
DO NOT SCALE IF IN DOUBT,ASK	SCALE NONE		
PART NO N/A			
DWG NO	N/A		

WARNING: THIS DOCUMENT IS THE PROPERTY OF JABIL OR ITS CLIENTS AND CONTAINS CONFIDENTIAL AND TRADE SECRET INFORMATION OF JABIL OR CLIENTS.

JABIL
Jabil Precision Industry (Guangzhou) Co. Ltd.

TITLE: OUTER CARTON ASSEMBLY

FILE NAME: #1-LS Europe Packing
ASSEMBLY: Packing Assembly
SHEET: 1 of 2
SIZE: A4

Product no:	

Packing instruction
Stage:Palletization

Note:If not enough loaded carton boxes to stack to full one layer,Must use the empty carton box by MFG to fill to pallet level.
注意:如果出货的卡通箱不够装满一整层,必须用空箱填满空位,保持卡板上层平整以便于打带,此操作由生产部员工完成.

Notes:
*48xUnit/carton
*8cartons/layer
*4 Layers/pallet
*1536 xUnits/pallet

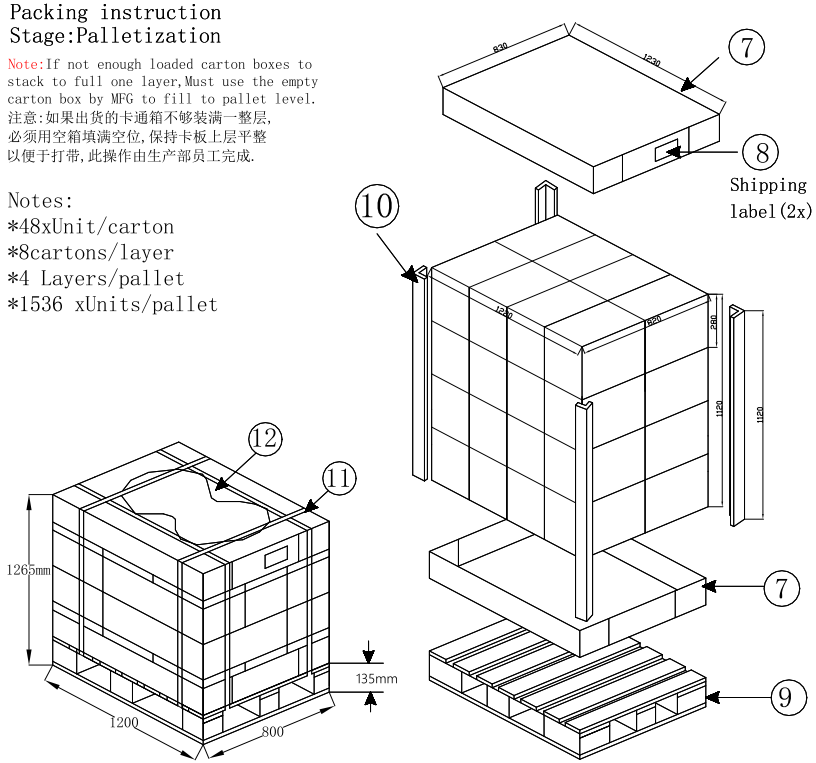

TWO PALLETS CAN BE STACKED TOGETHER IN ORDER TO FULLY OCCUPIED THE 20"/40"CONTAINER LOADING.
Loaded pallet arrangement for container:

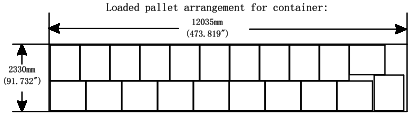

40"standard dry container(2274mm Height)
Loaded pallet Qty:(11*10)x2=42,Total 75600 Units.

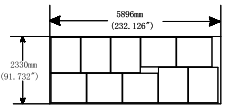

20"standard dry container(2274mm Height)
Loaded pallet Qty:(5+5)x2=20,Total 36000 Units.

Item #	Jabil China P/N	Description	Qty
12	Shop-supply	Stretch wrap	TBD
11	Shop-supply	Polyester Strapping	TBD
10	LS-2WB0000022B-C	Kaite Board 1120mm*1000mm FSC	4/1536
9	LS-5PT0000012A-C	PALLET WOOD 1200X800X135mm	1/1536
8	CM-7K0000050KBL-C	CARTON LABEL 105*100MM	2/1536
7	LS-2TC0000014A-C	Corner Tap Bottom Size 1220X800*35mm FSC	2/1536

DESIGN	DATE	MATERIAL	QTY
Javy Wu	11-10-2023	N/A	/
TRACE Javy Wu	DATE 11-10-2023	FINISH N/A	
APPD Bacon Chen	DATE 11-10-2023	MODEL NO N/A	
CKD N/A	DATE N/A		
DO NOT SCALE IF IN DOUBT,ASK	SCALE NONE		
PART NO N/A			
DWG NO			

WARNING: THIS DOCUMENT IS THE PROPERTY OF JABIL OR ITS CLIENTS AND CONTAINS CONFIDENTIAL AND TRADE SECRET INFORMATION OF JABIL OR CLIENTS.

JABIL
Jabil Precision Industry (Guangzhou) Co. Ltd.

TITLE: PALLETIZATION

FILE NAME: #1-LS Europe Packing
ASSEMBLY: Packing Assembly
SHEET: 2 of 2
SIZE: A4